KUKJE Branson 2400 Branson Tractor

Parts Catalogue

BRANSON TRACTOR

CONTENTS

GROUP NO	GROUP NAME	PAGE
000	00/10 TRACTOR PARTS	6
001-1	AIR CLEANER	8
001-2	AIR CLEANER(2018.02)	10
002.	COMP MUFFLER	12
003A-1	ACCELERATOR LEVER	14
003A-2	ACCELERATOR LEVER(2017.10)	16
005-1	FUEL TANK	18
005-2	FUEL TANK(2017.11)	20
006-1	FUEL FILTER & PIPE	22
006-2	FUEL LINE	24
007-1	WATER PIPE	26
007-2	WATER PIPE	28
008.	RADIATOR	30
009.	RESERVE TANK	32
010A	BATTERY	34
011A-1	SWITCH	36
011A-2	SWITCH(2017.11)	38
012A-1	PANEL BOARD	40
012A-2	SWITCH PANEL BOARD(2017.11)	42
013-1	HEAD LIGHT	44
013-2	HEAD RIGHT(2015.01)	46
013-3	HEAD RIGHT(2018.07)	48
014-1	TAIL LIGHT	50
014-2	TAIL LIGHT(2017.10)	52
015-1	WINKER LAMP	54
015-2	WINKER LAMP(2015.08)	56
015-3	WINKER LAMP(2019.12~)	58
016A-1	ELECTRICAL WIRING	60
016A-2	16. ELECTRICAL WIRING	62
017.	CLUTCH	64
018.	CLUTCH ROD & RELEASE	66
019.	CLUTCH PEDAL	68
020A-1	CLUTCH HOUSING	70
020T-2	CLUTCH HOUSING	72
021A-1	CENTER FRAME-2400(H)	74

GROUP NO	GROUP NAME	PAGE
021A-2	CENTER FRAME-2400(2018.04~)	76
022A-1	TRANSMISSION CASE (HYDROSTAT)-2400	78
024A	DIFFERENTIAL GEAR CASE_2400(h)	80
025-1	25. REAR CASE	82
025-2	25. REAR CASE(2018.09~)	84
026.	CLUTCH SHAFT	86
027A	PROPELLER SHAFT	88
030A	FRONT SHAFT	90
032A-1	32. PTO SHAFT	92
032A-2	32. PTO SHAFT(2018.03~)	94
034A	MID PTO	96
037A-1	REAR DIFFERENTIAL _2400(h)	98
037A-2	REAR DIFFERENTIAL _2400(h),2019~	100
038A	FRONT WHEEL PROPELLER SHAFT	102
040A	2ND SHAFT _2400	104
042A	3RD.SHAFT	106
044A	4TH. SHAFT	108
046A	MAIN GEAR SHIFT FORK	110
047A	RANGE GEAR SHIFT FORK _2400(H)	112
048A	PTO GEAR SHIFT FORK	114
050	DIFFERENTIAL LOCK SHIFT FORK	116
051-1	REAR AXLE	118
051-2	51. REAR AXLE ASSY	120
052.	BRAKE	122
053.	BRAKE ROD	124
054-1	BRAKE PEDAL	126
054-2	BRAKE PEDAL(2018.06~)	128
055.	BRAKE SWITCH	130
056A	SIDE BRAKE _2400(h)	132
057A-1	MAIN GEAR SHIFT LEVER	134
061A-1	RANGE GEAR SHIFT LEVER _2400(h)	136
061A-2	RANGE GEAR SHIFT LEVER(2018.03) _2400(h)	138
062A	FRONT WHEEL DRIVE LEVER _2400(h)	140
063A-1	PTO GEAR SHIFT LEVER _2400(h) _2400(h)	142
063A-2	PTO GEAR SHIFT LEVER _2400(h)	144

GROUP NO	GROUP NAME	PAGE
064A	HYDRAULIC CONTROL LEVER	146
066A	DIFFERENTIAL LOCK PEDAL	148
068	FRONT AXLE FRAME	150
069A-1	FRONT AXLE CASE	152
069A-2	FRONT AXLE CASE(2017.10)	154
070-1	FRONT DIFFERENTIAL	156
070-2	FRONT DIFFERENTIAL	158
071.	DIFFERENTIAL GEAR SHAFT	160
072-1	BEVEL GEAR CASE	162
072-2	BEVEL GEAR CASE(2017.05)	164
073.	FRONT AXLE CASE	166
074-1	FRONT AXLE	168
074-2	FRONT AXLE(2017.05)	170
075A	FORNT DRIVE SHAFT	172
077.	PST CYLINDER COVER	174
078.	TIE ROD	176
079.	STEERING WHEEL	178
080.	STEERING POST	180
081	HYDRAULIC STEERING VALVE	182
082.	HYDRAULIC PUMP	184
083A	HYDRAULIC OIL LINE _2400(h)	186
084A	HYDRAULIC OIL LINE _2400	188
085A	HYDRAULIC STEERING LINE	190
088A	HYDRAULIC OIL LINE (F/M)	192
090A-1	HYDRAULIC CYLINDER	194
090A-2	HYDRAULIC CYLINDER(2017.07)	196
092	HYDRAULIC PISTON / LIFT ARM	198
093A	FEED BACK LEVER	200
095A	CONTROL VALV	202
097.	LIFT LINK	204
098.	LIFT ARM	206
099	3-POINT LINKAGE(TOP LINK)	208
100A	CHECK CHAIN	210
101.	DRAW BAR	212
102.	PTO SHEILD	214

GROUP NO	GROUP NAME	PAGE
103.	HOOD	216
104.	PANEL COVER	218
105.	SHUTTER PLATE	220
106A	LEVER GUIDE	222
108	FENDER	224
109.	FENDER STAY	226
110A	FLOOR SEAT	228
111.	SEAT	230
112A-1	STEP_2400	232
112A-2	STEP(2018.04)	234
113-1	ROPS	236
113-2	ROPS(2018.05)	238
113-3	ROPS(2018.06~)	240
115	SMV BRACKET	242
118	FRONT WHEEL	244
119	REAR WHEEL	246
120A	DECAL _2400	248
121	BALLAST WEIGHT	250
122	REAR VIEW MIRROR	252

FIG 000 Branson 2400	00/10 TRACTOR PARTS	Year/Month 2020/01

00/10 TRACTOR PARTS

ENGINE

FIG 000 Branson 2400	00/10 TRACTOR PARTS	Year/Month 2020/01

KeyNo.	Part Number	Part Name	Quantity	Other
00/10 TRACTOR P	00/10 S	00/10 TRACTOR PARTS	0	

FIG 001-1 Branson 2400	AIR CLEANER	Year/Month 2020/01

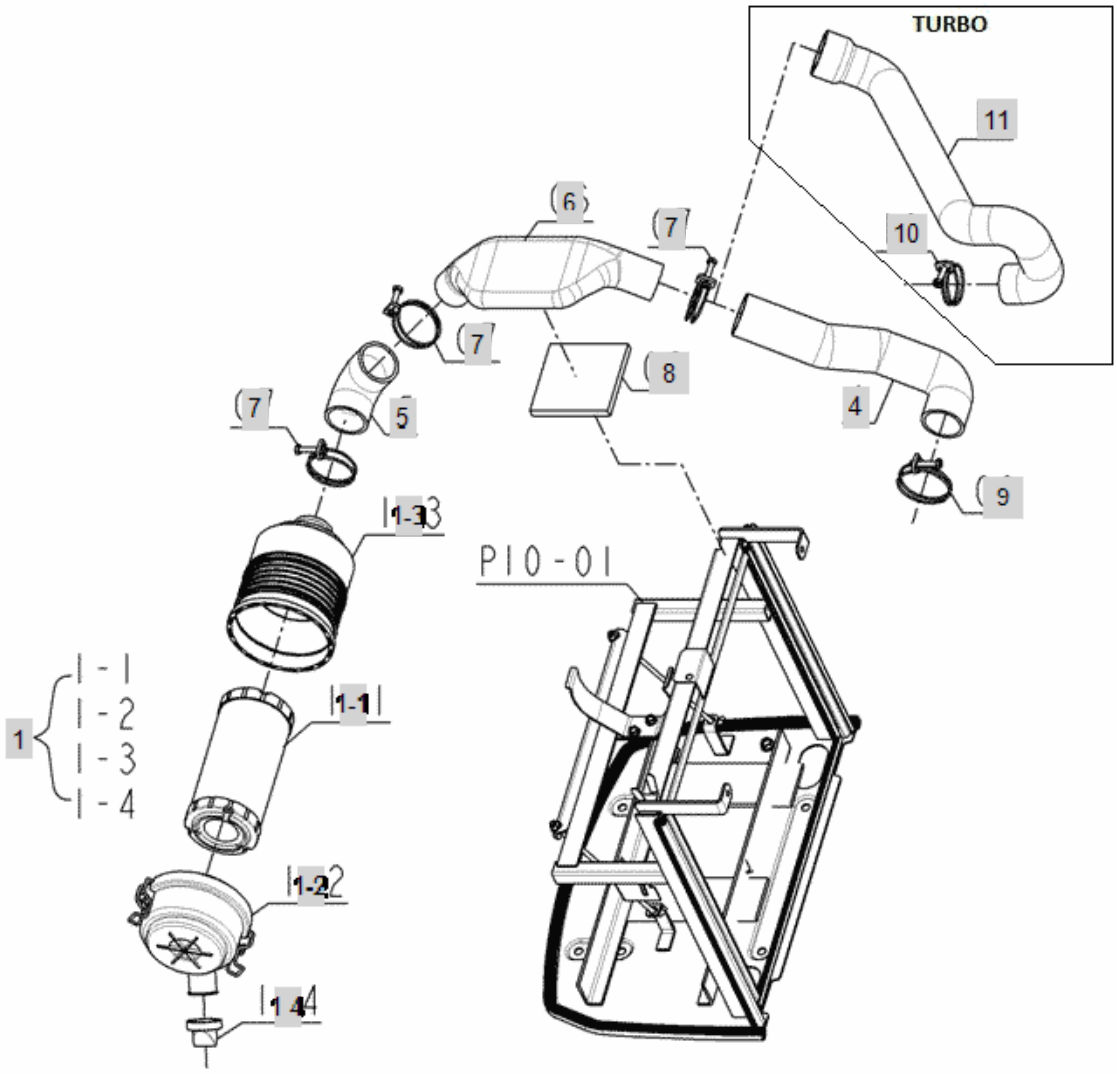

FIG 001-1 Branson 2400	AIR CLEANER	Year/Month 2020/01

KeyNo.	Part Number	Part Name	Quantity	Other
1	EA00000431A	AIR CLEANER ASSY	1	
1-1	EA00000985A	ELEMENT, AIRCLEANER (PRIMARY)	1	
1-2	EA00000986A	BODY	1	
1-3	EA00000987A	COVER ASS'Y	1	
1-4	EA00000988A	VACCUATOR	1	
4	FE02040000A	HOSE, ENGINE(00 SEIRES)	1	
5	FE02050000A	HOSE, AIR CLEANER (00 SERIES)	1	
6	FE02060000A	HOSE, ENGINE II (00 SEIRES)	1	
7	23010-054000	BAND,AIR CLEANER	3	
8	FE02080000A	SPONGE, HOSE(00 SERIES)	1	
9	23010-600000	HOSE BAND	1	
10	23010-500000	BAND	1	
11	TA00016655A	HOSE (ENGINE)	1	

FIG 001-2 Branson 2400	AIR CLEANER(2018.02)	Year/Month 2020/01

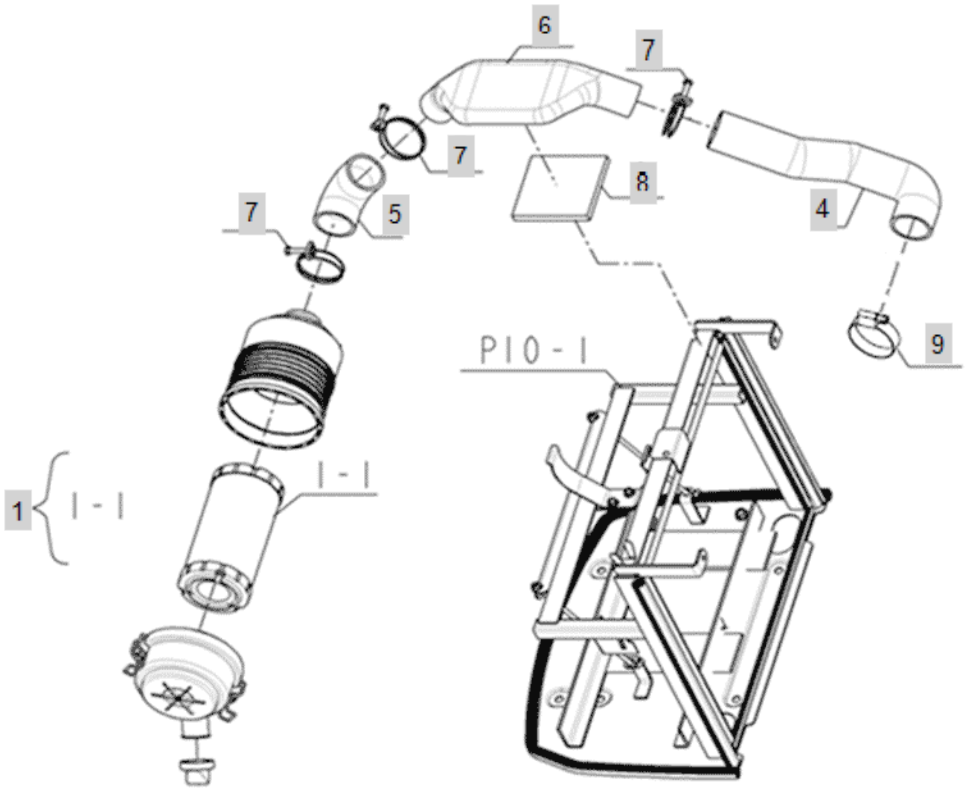

FIG 001-2 Branson 2400	AIR CLEANER(2018.02)	Year/Month 2020/01

KeyNo.	Part Number	Part Name	Quantity	Other
1	EA00000431A	AIR CLEANER ASSY	1	
1-1	EA00000985A	ELEMENT, AIRCLEANER (PRIMARY)	1	
4	FE02040000A	HOSE, ENGINE(00 SEIRES)	1	
5	FE02050000A	HOSE, AIR CLEANER (00 SERIES)	1	
6	FE02060000A	HOSE, ENGINE II (00 SEIRES)	1	
7	23010-054000	BAND,AIR CLEANER	3	
8	FE02080000A	SPONGE, HOSE(00 SERIES)	1	
9	23000-054000	HOSECLAMP54	1	

FIG 002. Branson 2400	COMP MUFFLER	Year/Month 2020/01

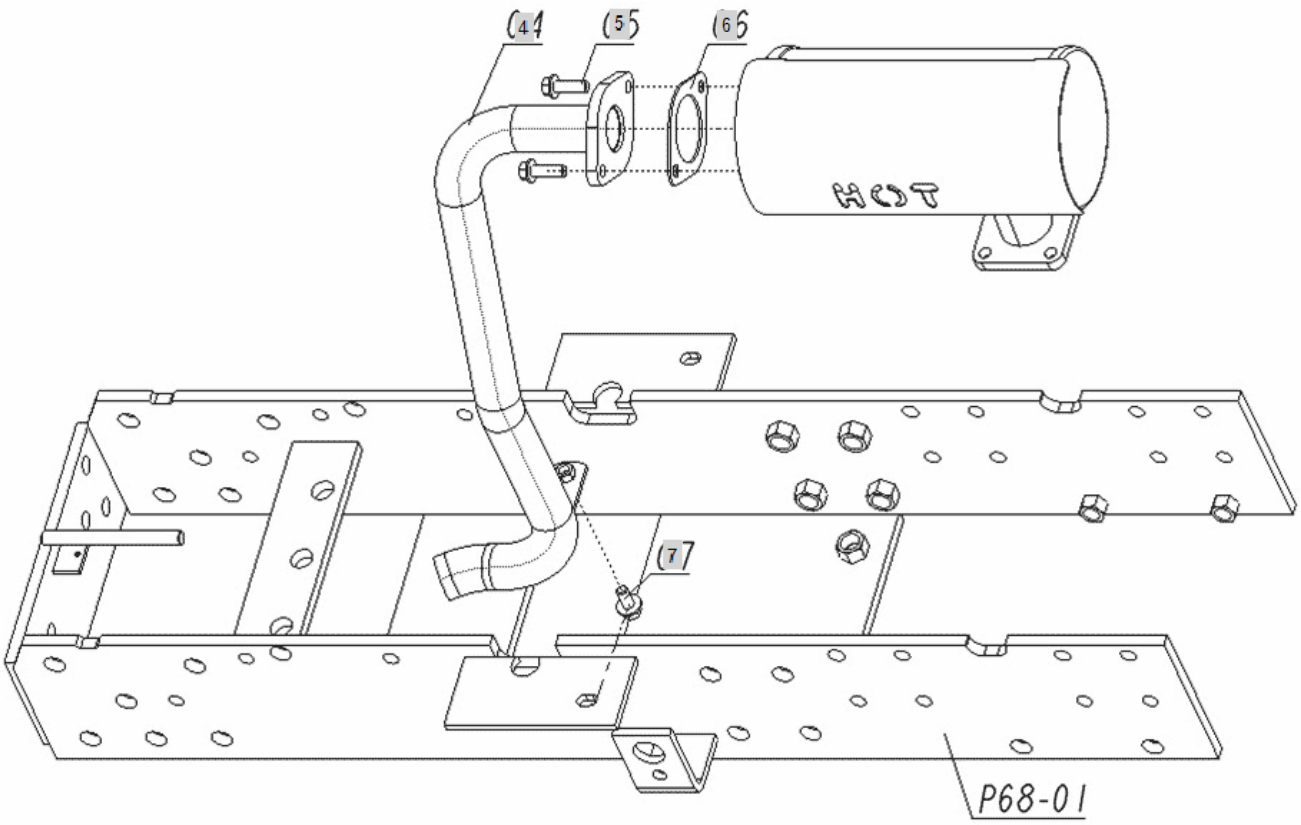

FIG 002. Branson 2400	COMP MUFFLER	Year/Month 2020/01

KeyNo.	Part Number	Part Name	Quantity	Other
4	FE03040000A	PIPE, EXHAUST (00 SERIES)	1	
4-1	TA00016656A	PIPE, EXHAUST	1	delete
5	26106-080252	SCREW,HEXFLANGEHEADCAP	2	
6	HK0514000EA4	GASKET	1	
7	26014-080202	Bolt, Hexa (8-20)	1	

FIG 003A-1 Branson 2400	ACCELERATOR LEVER	Year/Month 2020/01

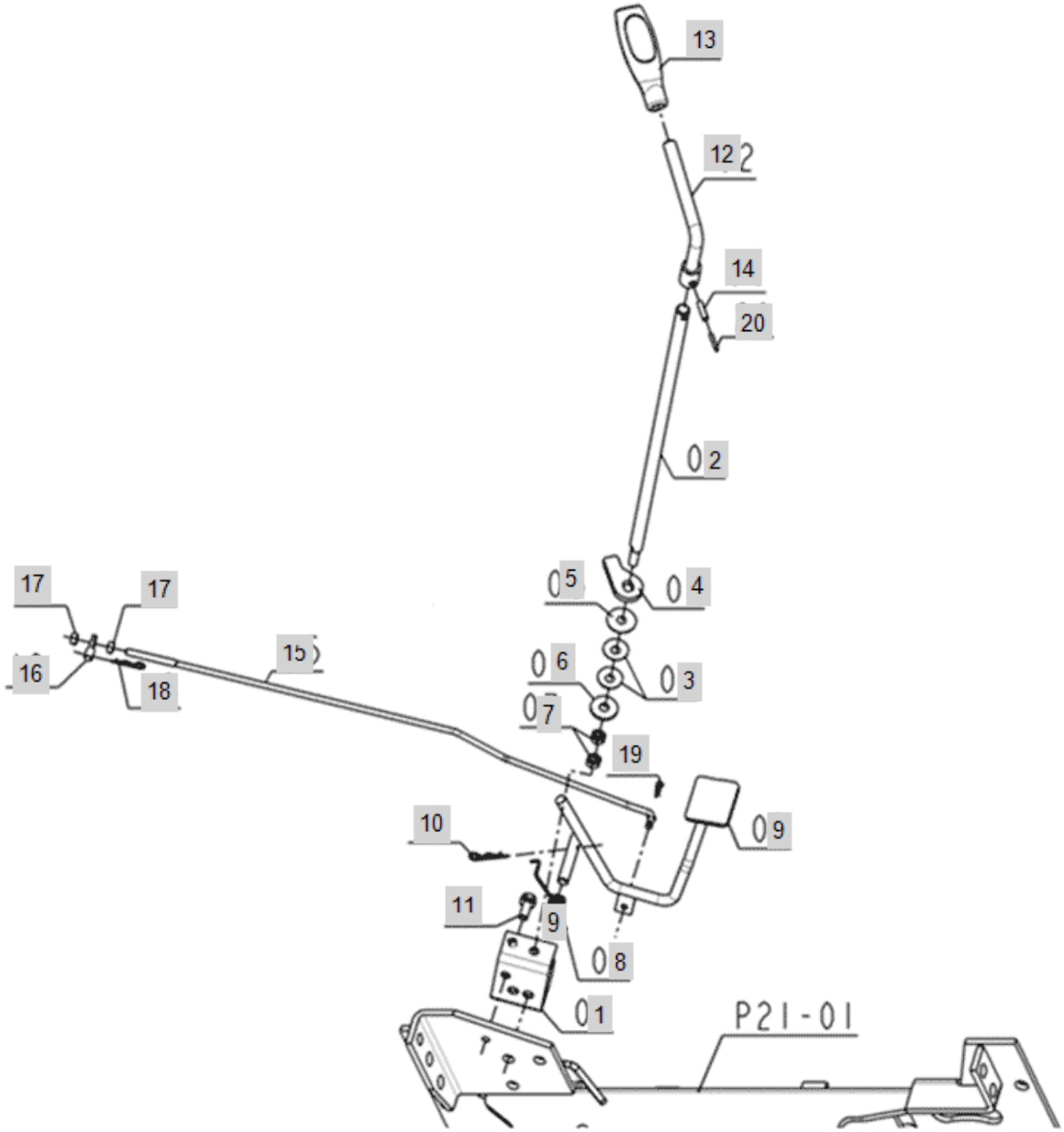

FIG 003A-1 Branson 2400	ACCELERATOR LEVER	Year/Month 2020/01

KeyNo.	Part Number	Part Name	Quantity	Other
1	FE04010000A	BRACKET, ACCELATOR (00 SERIES)	1	
2	FE04020000A	ROD, ACCELERATOR	1	
3	FE04030000A	SPRING, ACCELERATOR PLATE (00 SERIES)	2	
4	FE04040000A	ARM, ACCELERATOR (00 SERIES)	1	
5	FE04050000A	WASHER,ACCEL	1	
6	22157-080000	WASHER, PLAIN (Φ 08)	1	
7	26716-080002	NUT,HEX (D8)	2	
8	FE04090000A	SPRING,ACCEL	1	
9	FE04100000C	Pedal, Accel	1	
10	22360-100000	PIN , SNAP (10Φ)	1	
11	26013-080202	Bolt, Hexa (8-20)	1	
12	FE04140000B	LEVER, ACCEL	1	
13	TA00015801B	KNOB, ACCELERATOR	1	
14	22351-050020	PIN, SPRING (5-20)	1	
15	FE04170000A	ROD,CONNECTING ASS'Y	1	
16	FE04180000A	CONNECTOR	1	
17	26716-060002	HEX NUT (Φ6)	2	
18	22360-080000	PIN , SNAP (8Φ)	1	
19	22360-060000	PIN , SNAP (6Φ)	1	
20	22351-030020	PIN, SPRING (3X20)	1	

FIG 003A-2 Branson 2400	ACCELERATOR LEVER(2017.10)	Year/Month 2020/01

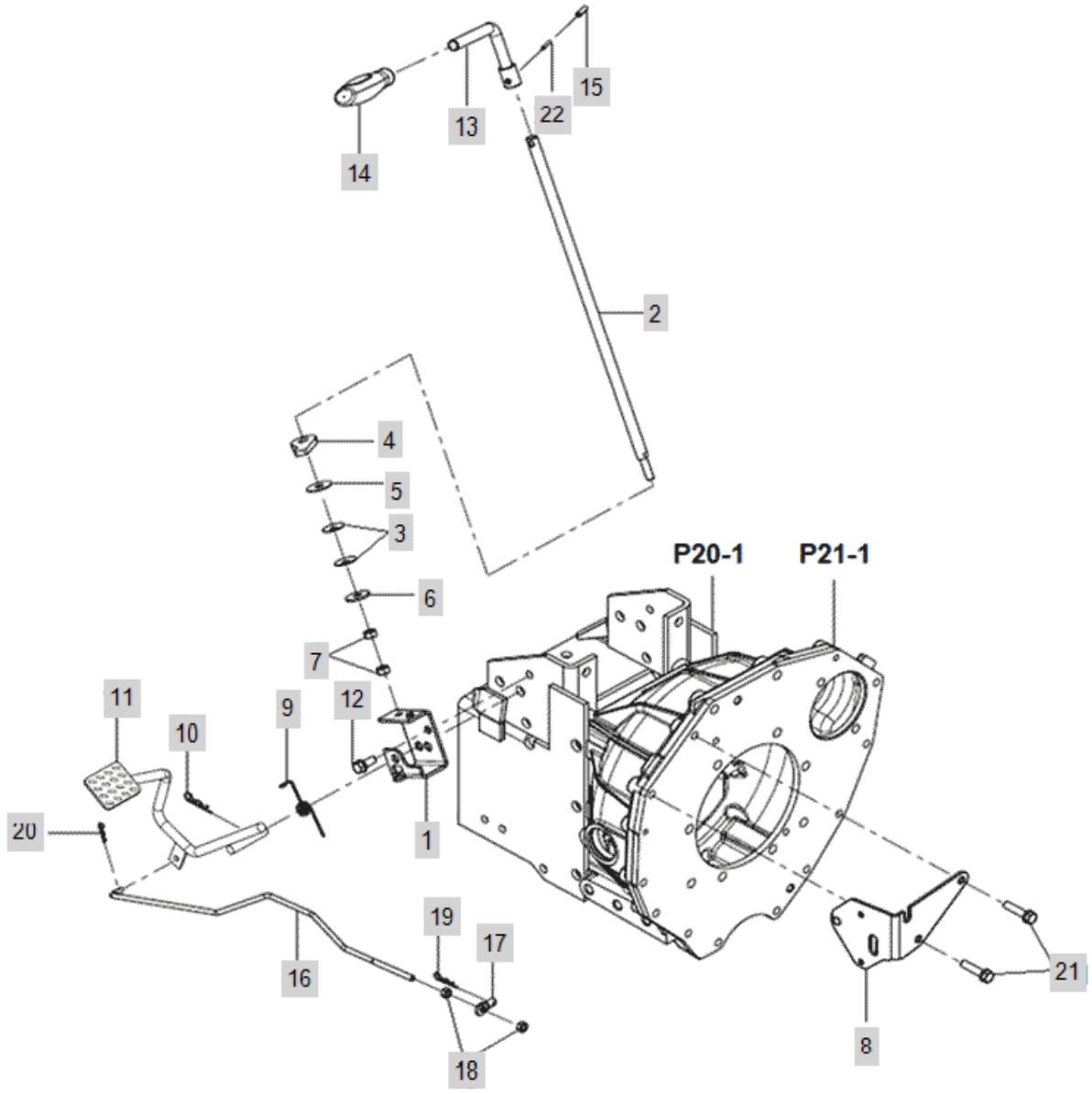

FIG 003A-2 Branson 2400	ACCELERATOR LEVER(2017.10)	Year/Month 2020/01

KeyNo.	Part Number	Part Name	Quantity	Other
1	FE04010000A	BRACKET, ACCELATOR (00 SERIES)	1	
2	FE04020000A	ROD, ACCELERATOR	1	
3	FE04030000A	SPRING, ACCELERATOR PLATE (00 SERIES)	2	
4	FE04040000A	ARM, ACCELERATOR (00 SERIES)	1	
5	FE04050000A	WASHER,ACCEL	1	
6	22157-080000	WASHER, PLAIN (Φ 08)	1	
7	26716-080002	NUT,HEX (D8)	2	
8	TA00049127B	BRACKET ASS'Y, LINK	1	
9	FE04090000A	SPRING,ACCEL	1	
10	22360-100000	PIN , SNAP (10Φ)	1	
11	FE04100000C	Pedal, Accel	1	
12	26013-080202	Bolt, Hexa (8-20)	1	
13	FE04140000B	LEVER, ACCEL	1	
14	TA00015801A	KNOB, ACCELERATOR -> TA00015801B	1	
15	22351-050020	PIN, SPRING (5-20)	1	
16	TA00049207A	ASS'Y ROD, RELEASE	1	
17	FE04180000A	CONNECTOR	1	
18	26712-060002	NUT	2	
19	22360-080000	PIN , SNAP (8Φ)	1	
20	22360-060000	PIN , SNAP (6Φ)	1	
21	26013-080352	SCREW,CAPTIVEWASHERCAP	2	
22	22351-030020	PIN, SPRING (3X20)	1	

FIG 005-1 Branson 2400	FUEL TANK	Year/Month 2020/01

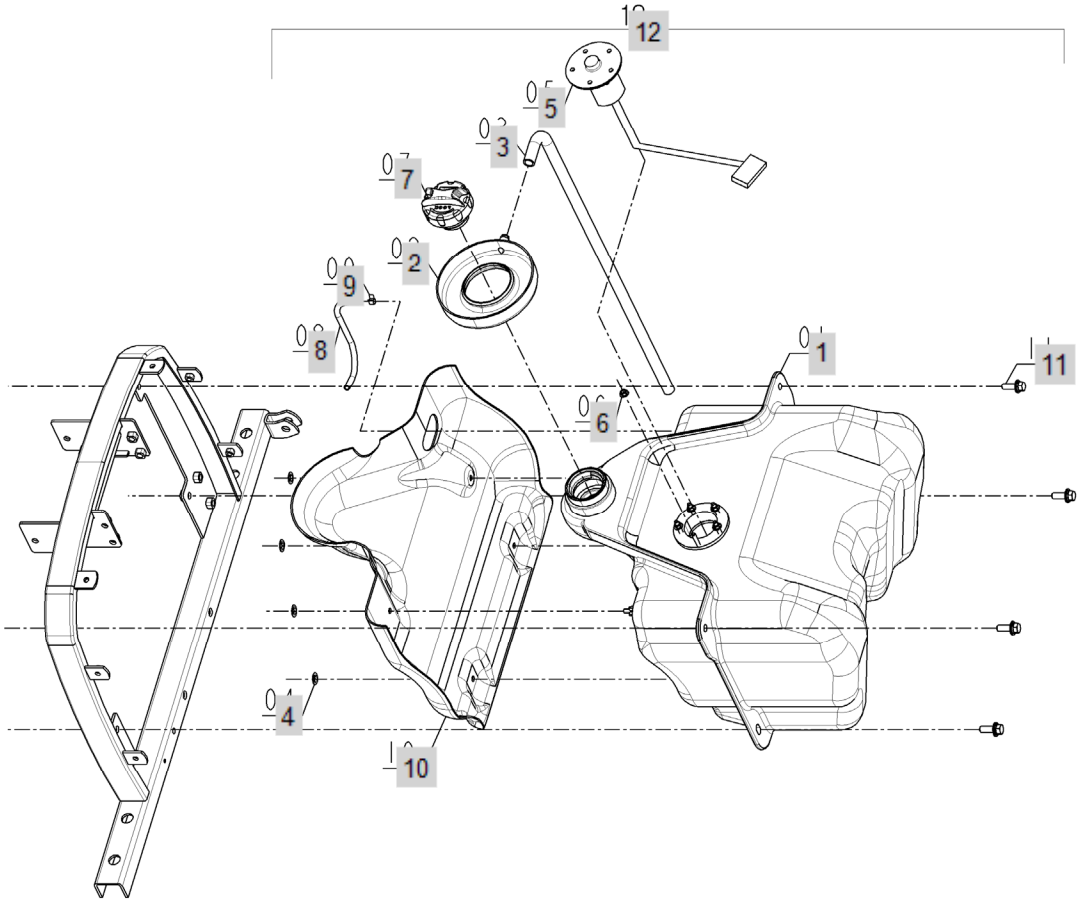

FIG 005-1 Branson 2400	FUEL TANK	Year/Month 2020/01

KeyNo.	Part Number	Part Name	Quantity	Other
1	FE06010000B	FUEL TANK ASSY -> FED0620000D	1	
2	FE06020000A	TRAY,FUEL	1	
3	FE06003000A	PIPE	1	
4	FE06040000A	NUT 6, PUSH	4	
5	HA00000016A	GAUGE,FUEL	1	
6	26367-050002	HEX FLANGE NUT Φ5)	5	
7	TA00017995A	CAP, FUEL FILLER	1	
8	FE07250000A	TUBE,FUEL	1	
9	23080-007000	CLIP, PIPE	2	
10	FEB3080000A	COVER,HEAT TROOF	1	
11	26014-080252	Bolt, Hexa (8-25)	4	
12	FE06200000D	FUEL TANK SUB ASS'Y	1	

FIG 005-2 Branson 2400	FUEL TANK(2017.11)	Year/Month 2020/01

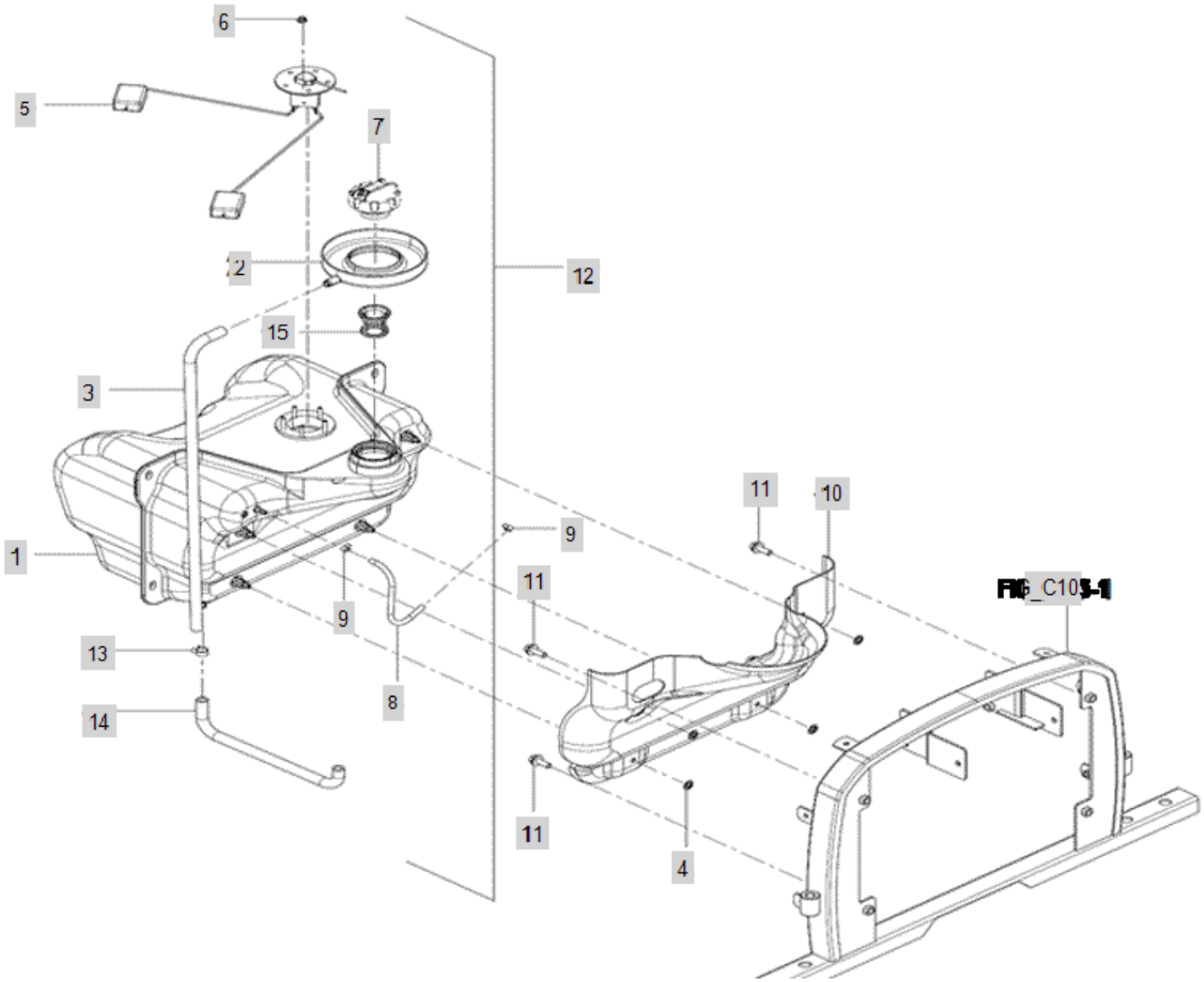

FIG 005-2 Branson 2400	FUEL TANK(2017.11)	Year/Month 2020/01

KeyNo.	Part Number	Part Name	Quantity	Other
1	FE06010000B	FUEL TANK ASSY -> FED0620000D	1	
2	FE06020000A	TRAY,FUEL	1	
3	FE06003000A	PIPE	1	
4	FE06040000A	NUT 6, PUSH	4	
5	HA00000016A	GAUGE,FUEL	1	
6	26367-050002	HEX FLANGE NUT Φ5)	5	
7	TA00037880A	FUEL CAP	1	
8	FE07250000B		1	
9	23080-007000	CLIP, PIPE	2	
10	FEB3080000A	COVER,HEAT TROOF	1	
11	26014-080252	Bolt, Hexa (8-25)	4	
12	TA00049180B	ASS'Y, FUEL TANK	1	
13	23080-013000	Clamp, Hose (Φ13)	1	
14	TA00049181B	HOSE	1	
15	TA00017996A	FUEL FILLTER	1	
FIG_C105-1	C105		0	

FIG 006-1 Branson 2400	FUEL FILTER & PIPE	Year/Month 2020/01

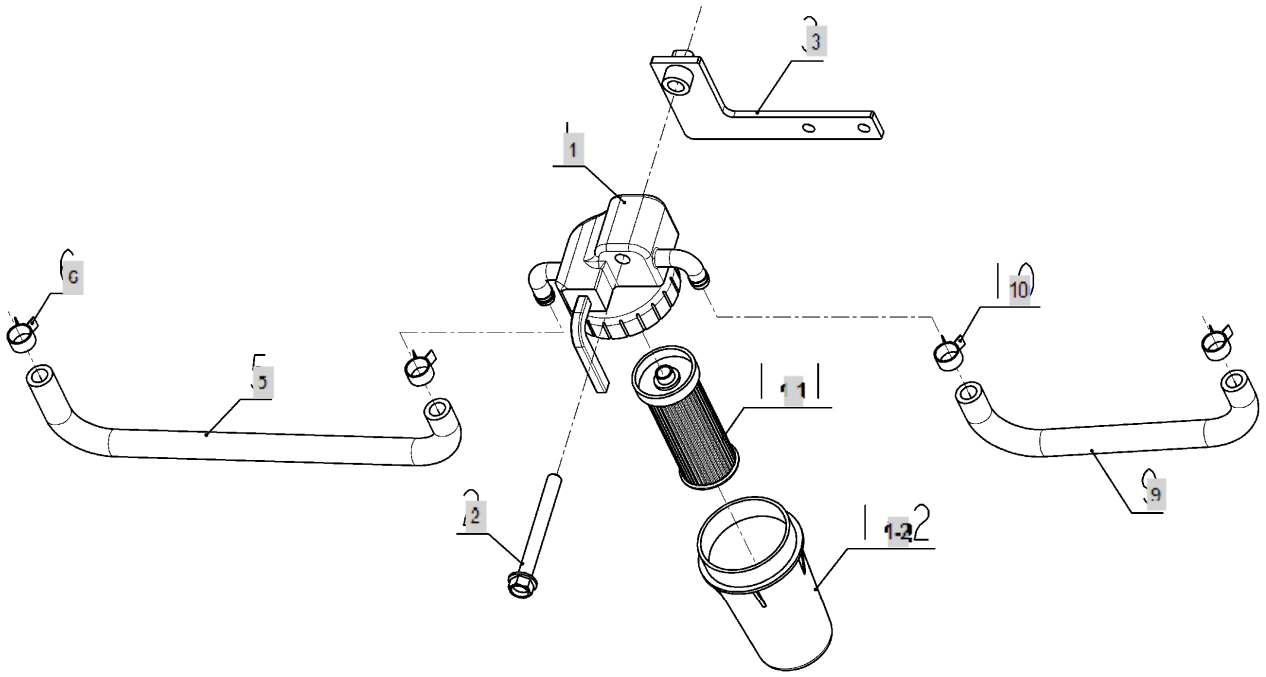

FIG 006-1 Branson 2400	FUEL FILTER & PIPE	Year/Month 2020/01

KeyNo.	Part Number	Part Name	Quantity	Other
1	HK13010000C2	FUEL FILTER ASSY	1	
1-1	HA13040000A4	ELEMENT, FUEL FILTER	1	
1-2	HA13050000B4	FILTER CUP	1	
2	26106-080752	SCREW,HEXFLANGEHEADCAP	1	
3	FE07030000B	BRACKET, FUEL FITLER	1	
5	FE07050000B	TUBE, FUEL	1	
6	23080-013000	Clamp, Hose (Φ13)	2	
9	FE07090000A	TUBE,FUEL	1	
10	23080-013000	Clamp, Hose (Φ13)	2	

FIG 006-2 Branson 2400	FUEL LINE	Year/Month 2020/01

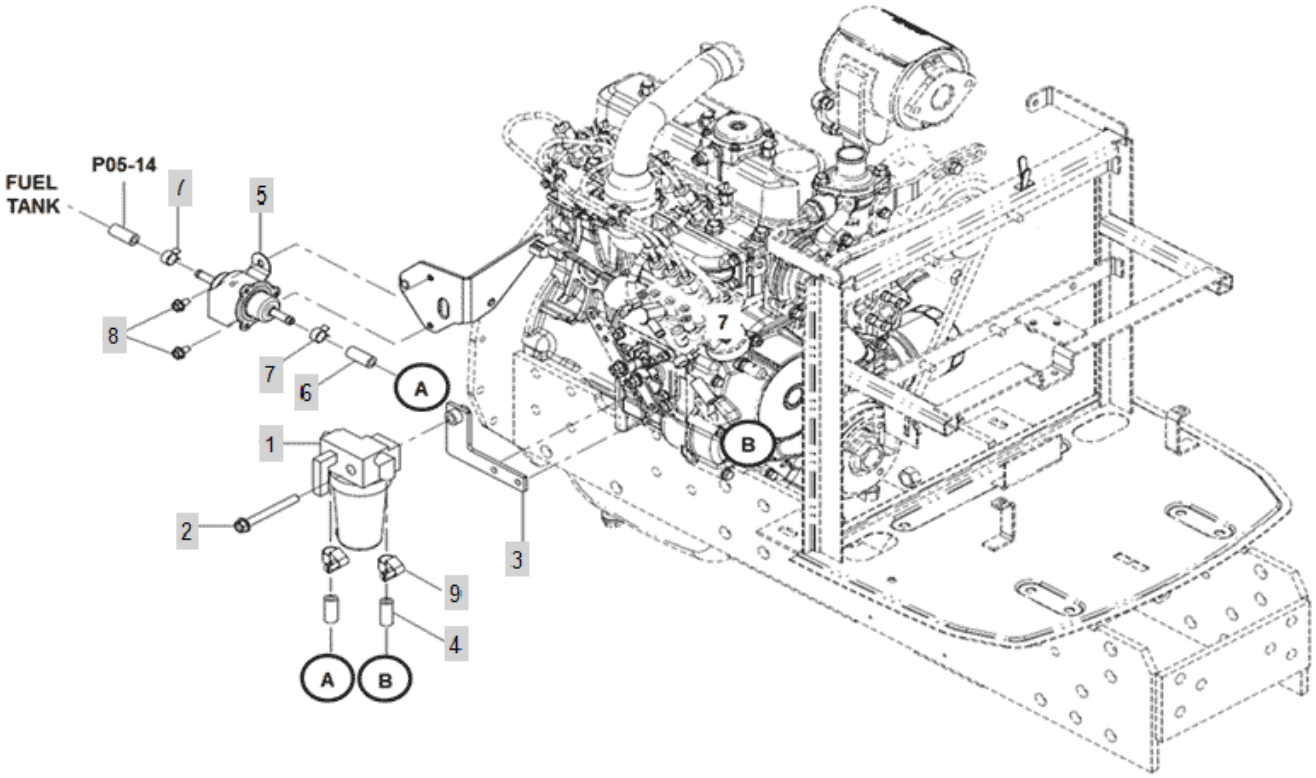

FIG 006-2 Branson 2400	FUEL LINE	Year/Month 2020/01

KeyNo.	Part Number	Part Name	Quantity	Other
1	HK13010000C2	FUEL FILTER ASSY	1	
2	26106-080752	SCREW,HEXFLANGEHEADCAP	1	
3	FE07030000B	BRACKET, FUEL FITLER	1	
4	23980-730330	HOSE	1	
5	HF20190000A2	FUEL FEED PUMP	1	
6	FE08120000B	HOSE, DRAIN	1	
7	23080-013000	Clamp, Hose (Φ13)	3	
8	26106-060122	HEX BOLT (6-12)	2	
9	23000-013000	Clip, Hose (Φ13)	2	

FIG 007-1 Branson 2400	WATER PIPE	Year/Month 2020/01

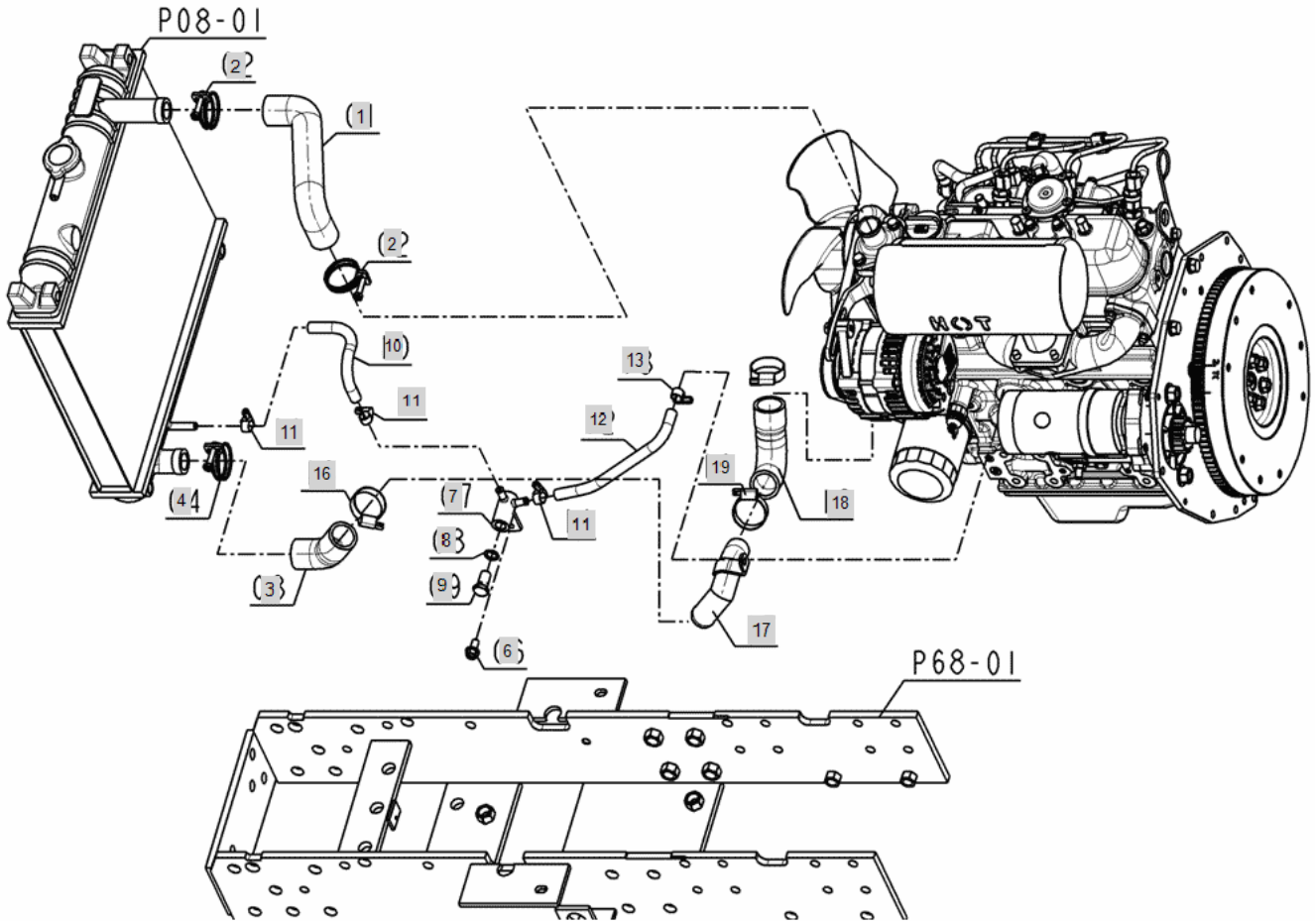

FIG 007-1 Branson 2400	WATER PIPE	Year/Month 2020/01

KeyNo.	Part Number	Part Name	Quantity	Other
1	FE08010000B	HOSE, WATER	1	
2	23010-040000	HOSEBAND	2	
3	FE08030000B	HOSE, WATER	1	
4	23010-040000	HOSEBAND	1	
6	26106-080162	SCREW,HEXFLANGEHEADCAP	1	
7	FBV2300000A	SUB TO-> FBV2300000A3	1	
8	23414-120000	WASHER, PLAIN (Φ 12)	1	
9	23857-060000	BOLT, CONNECTING	1	
10	FE08100000A	HOSE,DRAIN	1	
11	23000-013000	Clip, Hose (Φ13)	3	
12	FE08120000A	HOSE,DRAIN	1	
13	23000-013000	Clip, Hose (Φ13)	1	
16	23000-041000	HOSECLAMP	1	
17	EA00000450C	PIPE WATER	1	
18	EA00000451B	HOSE WATER	1	
19	23000-041000	HOSECLAMP	2	

FIG 007-2 Branson 2400	WATER PIPE	Year/Month 2020/01

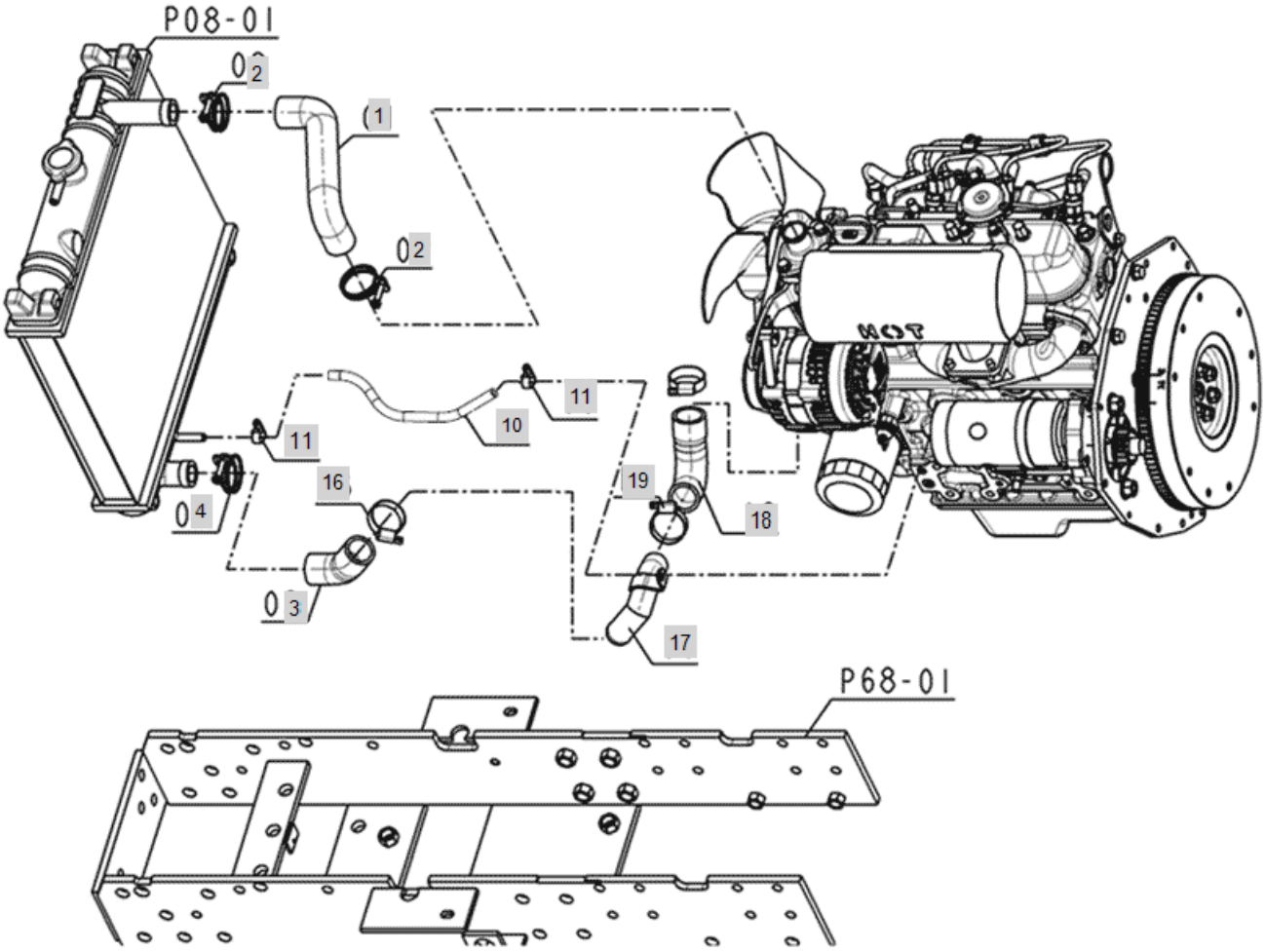

FIG 007-2 Branson 2400	WATER PIPE	Year/Month 2020/01

KeyNo.	Part Number	Part Name	Quantity	Other
1	FE08010000D	HOSE, WATER	1	
2	23010-038000	HOSEBAND	2	
3	FE08030000C	HOSE, WATER	1	
4	23010-040000	HOSEBAND	1	
10	23980-730330	HOSE	1	
11	23000-013000	Clip, Hose (Φ13)	2	
16	23000-041000	HOSECLAMP	1	
17	EA00000450C	PIPE WATER	1	
18	EA00000451B	HOSE WATER	1	
19	23000-041000	HOSECLAMP	2	

FIG 008. Branson 2400	RADIATOR	Year/Month 2020/01

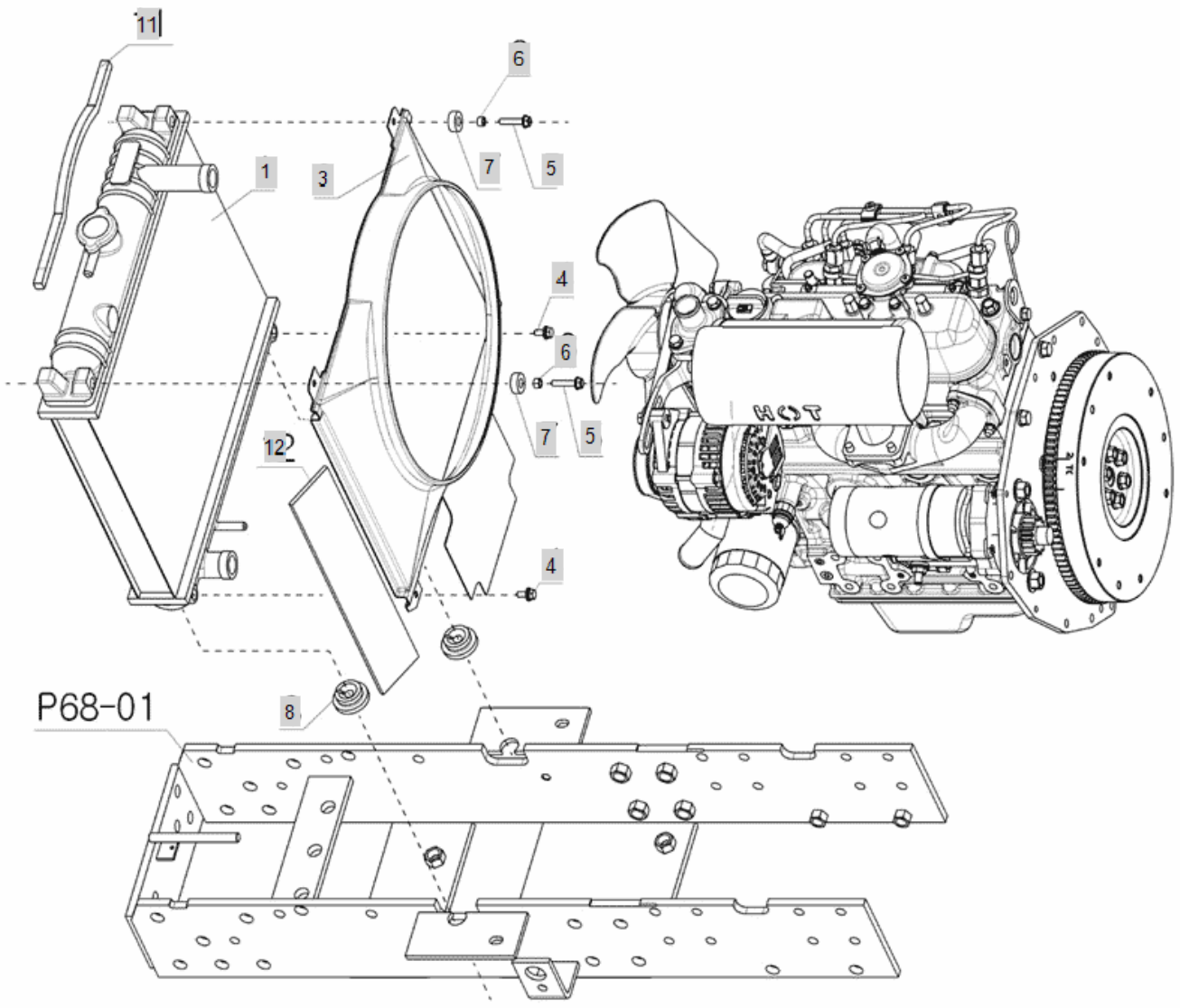

FIG 008. Branson 2400	RADIATOR	Year/Month 2020/01

KeyNo.	Part Number	Part Name	Quantity	Other
1	EA00000401B	RADIATOR ASS'Y	1	
3	FE09030000B	KIT SHROUD, FAN	1	
4	26014-060162	Bolt, Hexa (6-16)	2	
5	26106-060302	Bolt, Hexa (6-30)	2	
6	FE11220000A	COLLAR	2	
7	FE11230000A	RUBBER	2	
8	HRA1203300A4	RUBEER, VIBRATION PROOF	2	
11	FE09110000A	SPONGE, RADIATOR	5	
12	FE09120000A	TAPE,RADIATOR	1	

FIG 009. Branson 2400	RESERVE TANK	Year/Month 2020/01

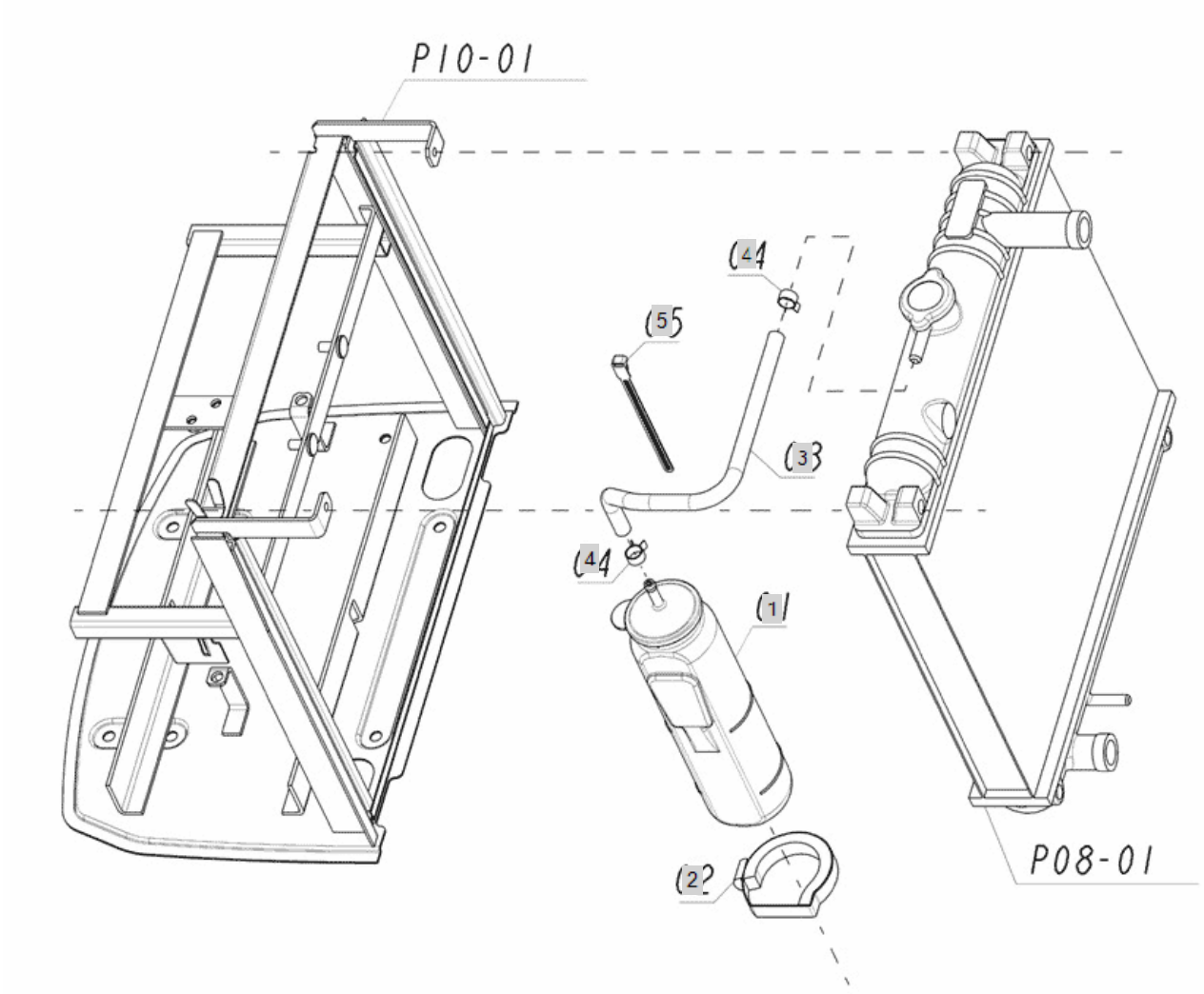

FIG 009. Branson 2400	RESERVE TANK	Year/Month 2020/01

KeyNo.	Part Number	Part Name	Quantity	Other
1	CA09270000C2	COOLANT RESERVOIR	1	
2	CA09310000A4	STRAP,SUBTANKMTG	1	
3	FE10020000A	HOSE,TUBE	1	
4	23080-013000	Clamp, Hose (Φ13)	2	
5	TB39260000A4	BAND	1	

FIG 010A Branson 2400	BATTERY	Year/Month 2020/01

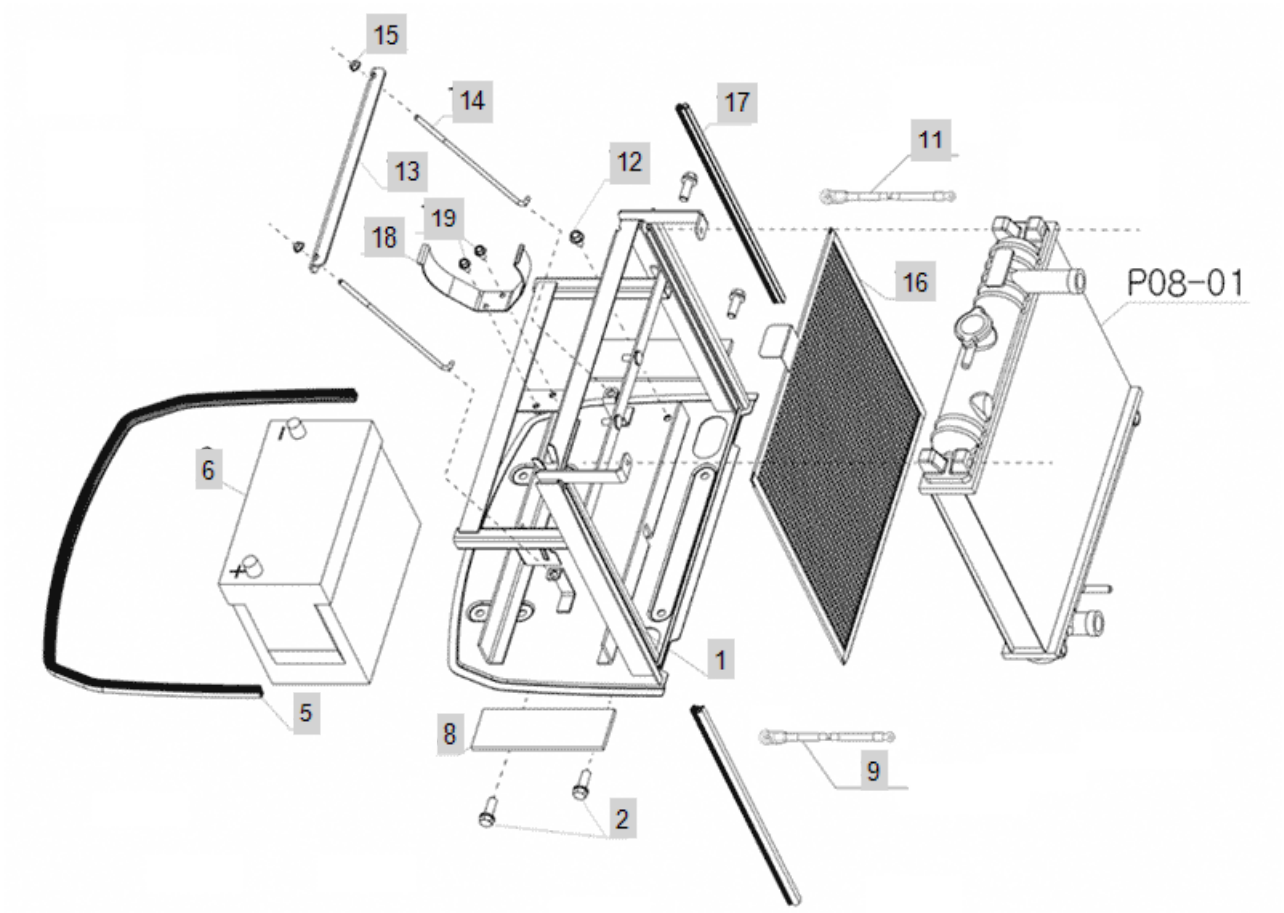

FIG 010A Branson 2400	BATTERY	Year/Month 2020/01

KeyNo.	Part Number	Part Name	Quantity	Other
1	FE11010000H	BRACKET, BATTERY	1	
2	26013-100302	SCREW,CAPTIVEWASHERCAP	4	
5	FE11050000A	STRIP	1	
6	HA00000925A	BATT(60AH)	1	
8	TTC4010000A4	TANKRUBBER,DUSTPROOF	2	
9	HA00000075C	CABLE BATTERY(+)	1	
11	HA00000076C	BATTERY CABLE (-)	1	
12	26106-080122	Bolt, Hexa (8-12)	1	
13	FE11130000C	BATTERY FIX BRAKET	1	
14	TA00044497A	BETTERY BOLT	2	
15	26366-060002	Nut, Hexa (Φ6)	2	
16	FE11180000B	NET, RADIATOR	1	
17	FE11190000A	STRIP B	2	
18	FE11200000A	BRACKET,AIRLEANER	1	
19	26106-060122	HEX BOLT (6-12)	2	
20	RA00000709B	BAND ASSY, AIR CLEANER FIX	1	

FIG 011A-1 Branson 2400	SWITCH	Year/Month 2020/01

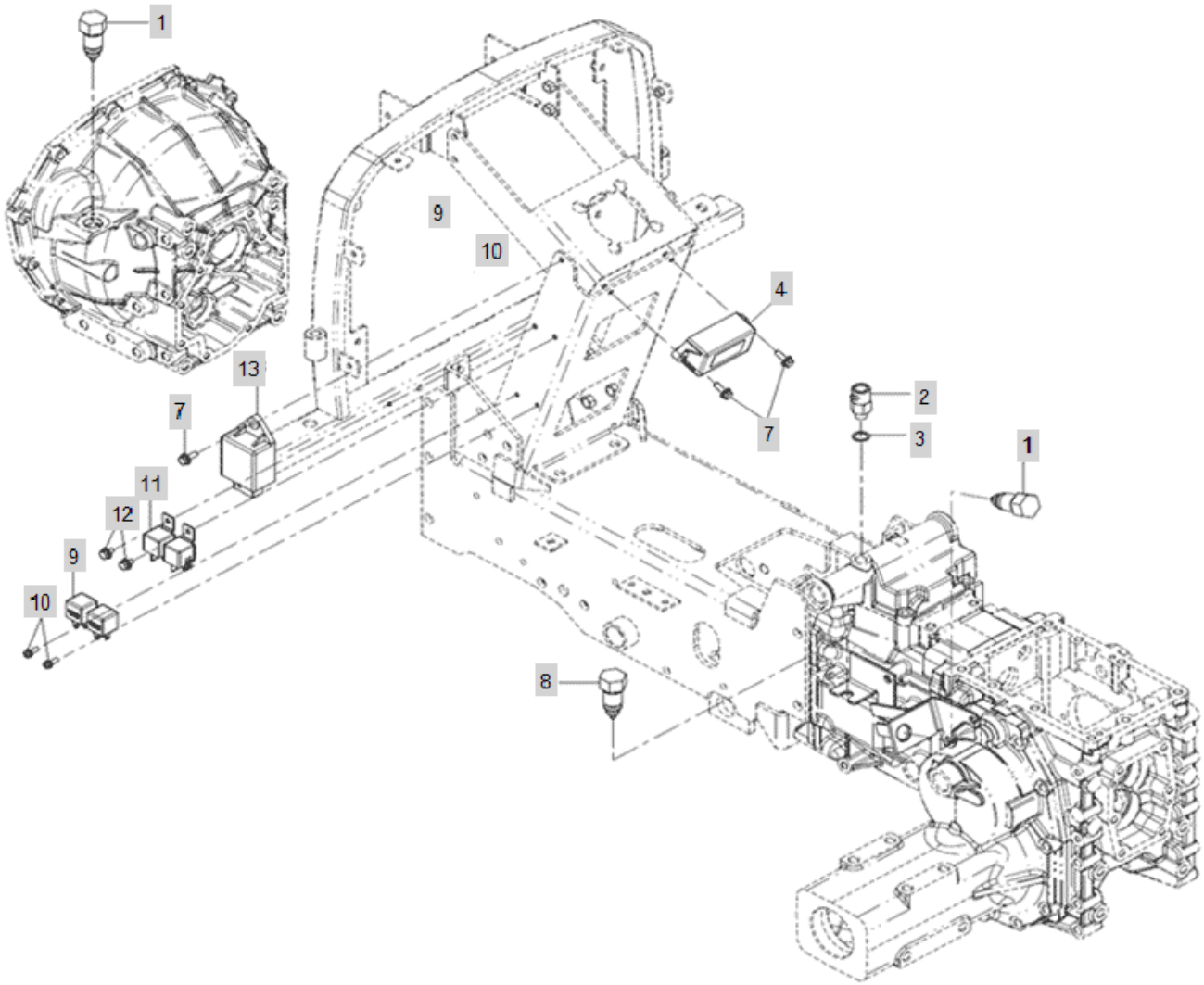

FIG 011A-1 Branson 2400	SWITCH	Year/Month 2020/01

KeyNo.	Part Number	Part Name	Quantity	Other
1	TZC5140000A3	SAFETY S/W, START	2	
2	HA00000012A	SWITCH,SAFETY	1	
3	23414-140000	PACKING14	1	
4	HA00001037A	FLASH UNIT	1	
7	26014-060202	BOLT(PW+SW)	3	
8	CQI3010000A3	SWTICH, NEUTRAL	1	
9	FTC5130000A3	RELAY(5P)	2	
10	26023-050162	Screw (5-16)	2	
11	FTB9160000A3	GLOW RELAY (12V-70A)	2	
12	26022-060122	SCREW BOLT W/WASHER	2	
13	HA00000013A	CONTROLLER, OPC	1	

FIG 011A-2 Branson 2400	SWITCH(2017.11)	Year/Month 2020/01

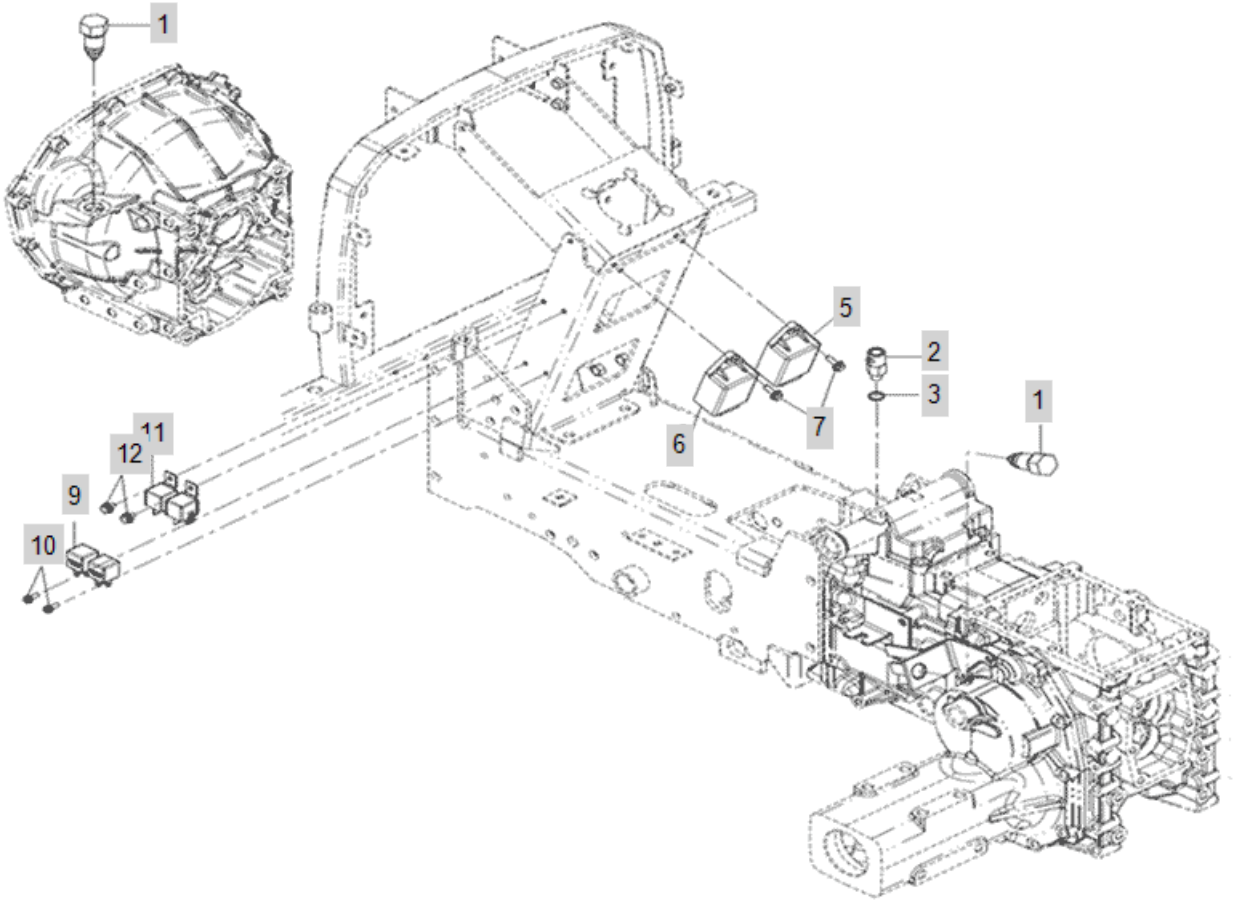

FIG 011A-2 Branson 2400	SWITCH(2017.11)	Year/Month 2020/01

KeyNo.	Part Number	Part Name	Quantity	Other
1	TZC5140000A3	SAFETY S/W, START	2	
2	HA00000012A	SWITCH,SAFETY	1	
3	23414-140000	PACKING14	1	
5	HA00000821A	FLASHER RELAY	1	
6	HA00001727A	CONTROL UNIT	1	
6-1	HA00001334A	CONTROL UNIT	1	delete
7	26014-060202	BOLT(PW+SW)	2	
8	RN66310000A3	Buzzer	1	
9	FTC5130000A3	RELAY(5P)	3	
10	26023-050162	Screw (5-16)	1	
11	FTB9160000A3	GLOW RELAY (12V-70A)	2	
12	26022-060122	SCREW BOLT W/WASHER	2	

FIG 012A-1 Branson 2400	PANEL BOARD	Year/Month 2020/01

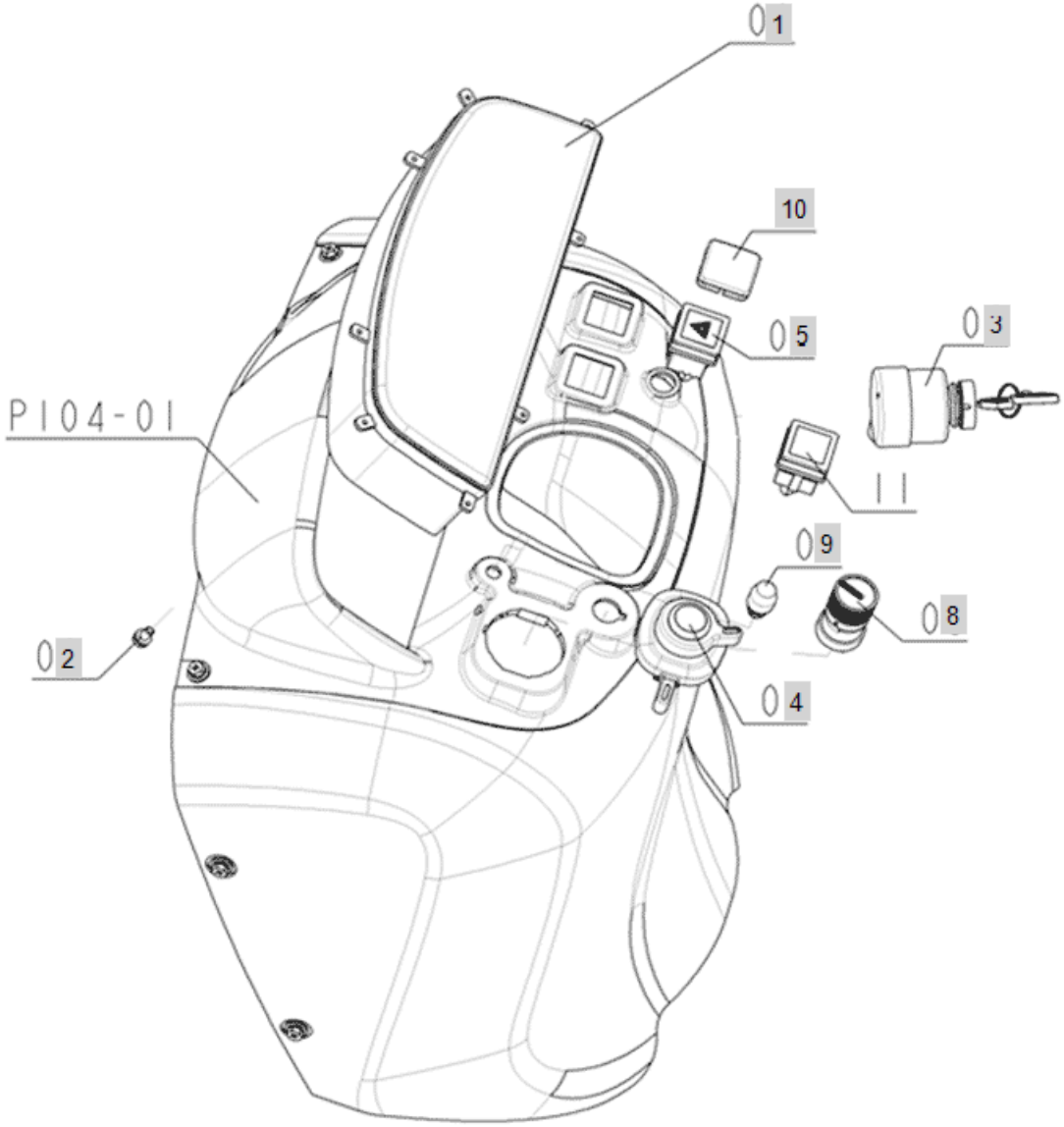

FIG 012A-1 Branson 2400	PANEL BOARD	Year/Month 2020/01

KeyNo.	Part Number	Part Name	Quantity	Other
1	HA00000722B	METER ASSY	1	
2	22857-400080	TAPPING BOLT	8	
3	TTC5030000C3	IGNITION SWITCH	1	
4	HA00000067A	COMBINATION SWITCH	1	
5	FBK3510000A3	EMERGENCY SWITCH	1	
8	TTC5120000A3	SWITCH.PACKING	1	
9	NTC555E000A3	EMERGENCY STOP SWITCH	1	
10	FEB1030000A	SWITCH RUBBER	1	

FIG 012A-2 Branson 2400	SWITCH PANEL BOARD(2017.11)	Year/Month 2020/01

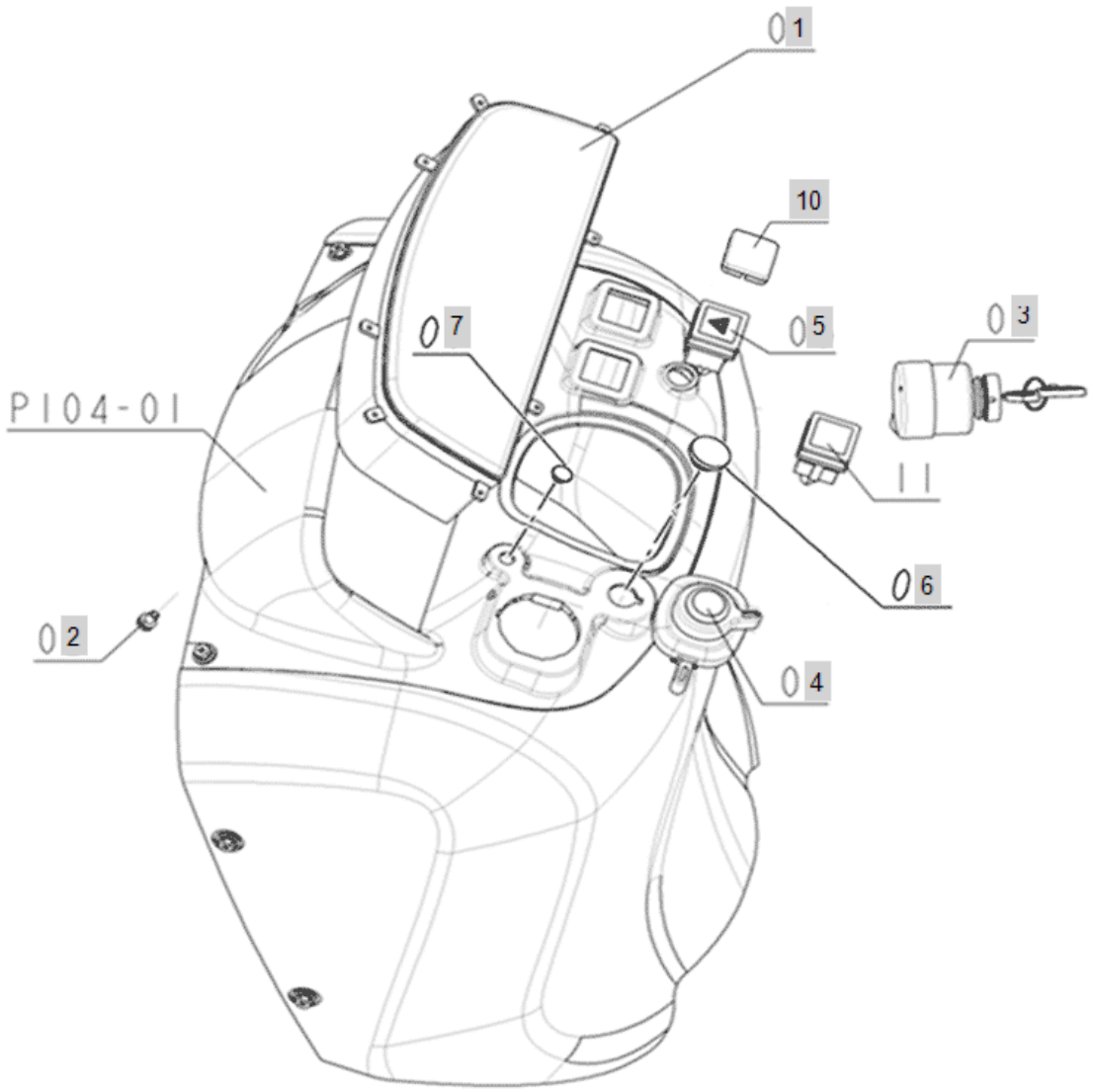

FIG 012A-2 Branson 2400	SWITCH PANEL BOARD(2017.11)	Year/Month 2020/01

KeyNo.	Part Number	Part Name	Quantity	Other
1	HA00000722B	METER ASSY	1	
2	22857-400080	TAPPING BOLT	8	
3	TTC5030000C3	IGNITION SWITCH	1	
4	HA00000067A	COMBINATION SWITCH	1	
5	FBK3510000A3	EMERGENCY SWITCH	1	
6	TTC5190000A4	GROMMET20.5	1	
7	TTD6650000A4	RUBBER	1	
10	FEB1030000A	SWITCH RUBBER	1	

FIG 013-1 Branson 2400	HEAD LIGHT	Year/Month 2020/01

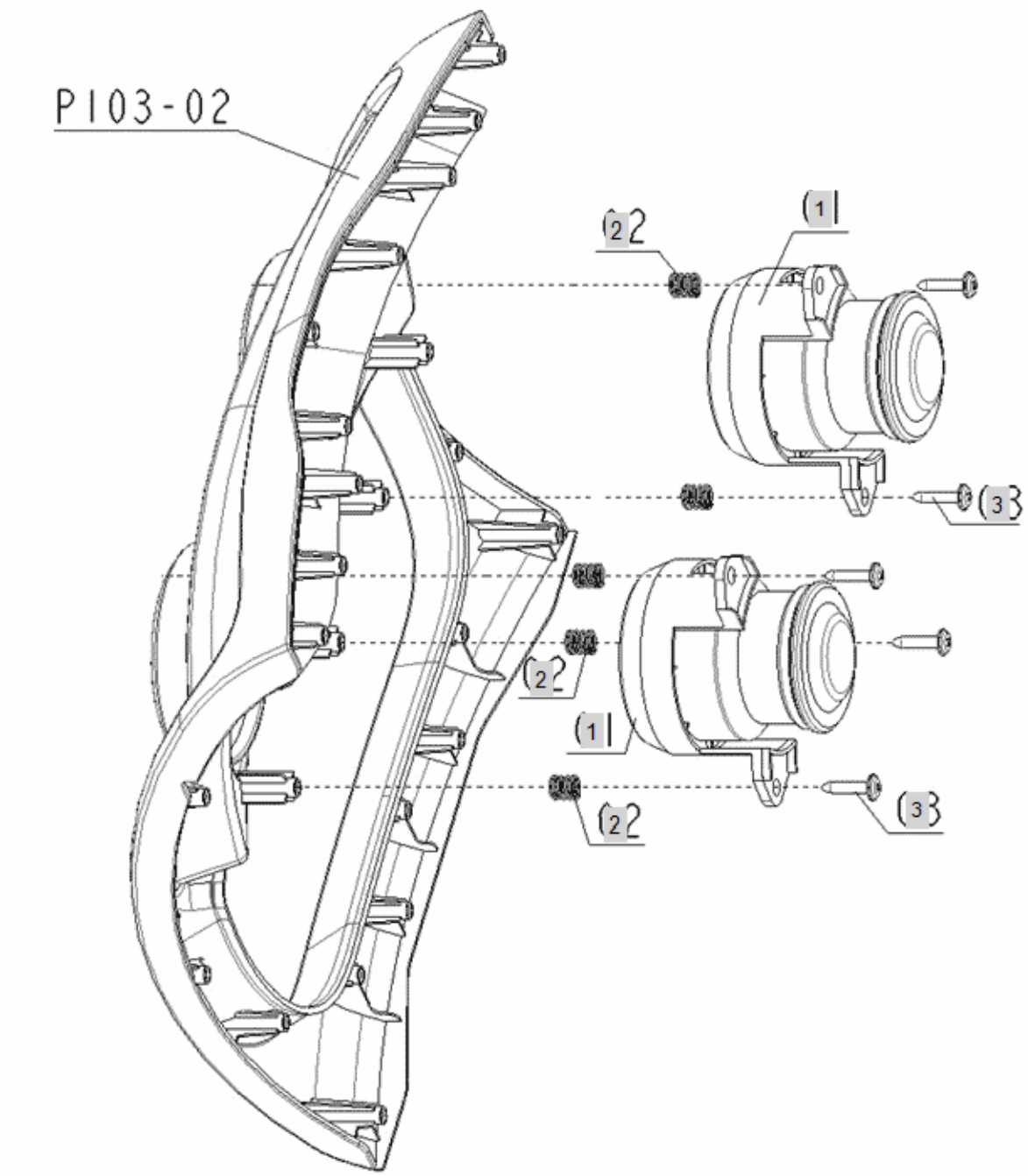

FIG 013-1 Branson 2400	HEAD LIGHT	Year/Month 2020/01

KeyNo.	Part Number	Part Name	Quantity	Other
1	TA00030968A	HEAD LAMP(EU)	2	
2	FE15020000A	SPRING,HEADLAMP	6	
3	FE15030000A	(+)SCREW	6	

FIG 013-2 Branson 2400	HEAD RIGHT(2015.01)	Year/Month 2020/01

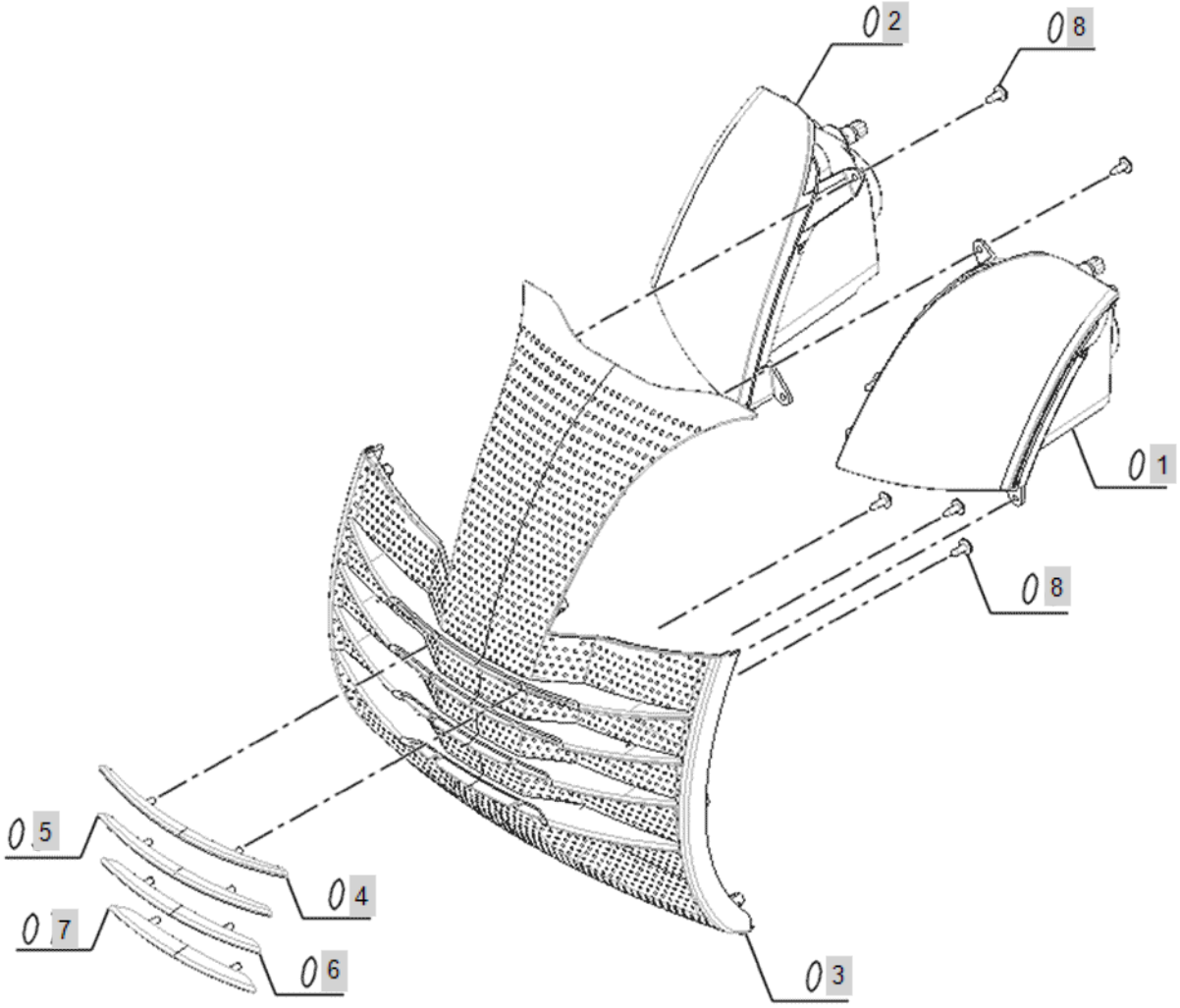

FIG 013-2 Branson 2400	HEAD RIGHT(2015.01)	Year/Month 2020/01

KeyNo.	Part Number	Part Name	Quantity	Other
1	HA00000981A	HEAD LAMP(L)	1	
2	HA00000982A	HEAD LAMP(R)	1	
3	TA00041012A	FRONT MASK	1	
4	TA00041013A	DECORATION 1	1	
5	TA00041014A	DECORATION 2	1	
6	TA00041015A	DECORATION 3	1	
7	TA00041016A	DECORATION	1	
8	TTD7090000A4	CROSSRECESSEDHEADTAPPINGSCREW	12	

FIG 013-3 Branson 2400	HEAD RIGHT(2018.07)	Year/Month 2020/01

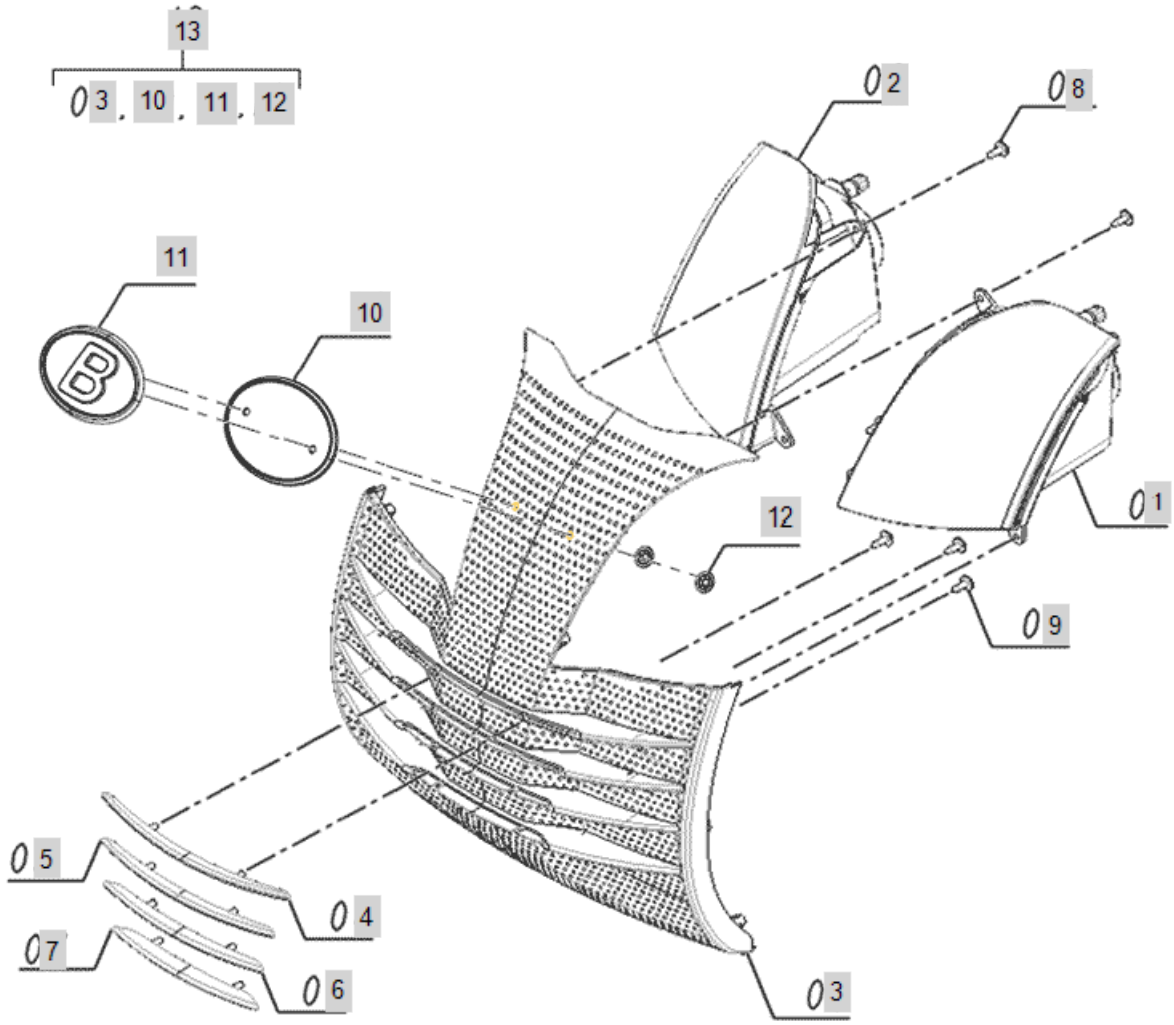

FIG 013-3 Branson 2400	HEAD RIGHT(2018.07)	Year/Month 2020/01

KeyNo.	Part Number	Part Name	Quantity	Other
1	HA00000981A	HEAD LAMP(L)	1	
2	HA00000982A	HEAD LAMP(R)	1	
3	TA00041012B	FRONT MASK	1	
4	TA00041013A	DECORATION 1	1	
5	TA00041014A	DECORATION 2	1	
6	TA00041015A	DECORATION 3	1	
7	TA00041016A	DECORATION	1	
8	TTD7090000A4	CROSSRECESSEDHEADTAPPINGSCREW	4	
9	22587-350102	TAPPING SCREW	8	
10	TA00052416A	EMBLEM COVER	1	
11	TA00052253A	EMBLEM	1	
12	FE06040000A	NUT 6, PUSH	2	
13	TA00056273A	EMBLEM ASSY	1	

FIG 014-1 Branson 2400	TAIL LIGHT	Year/Month 2020/01

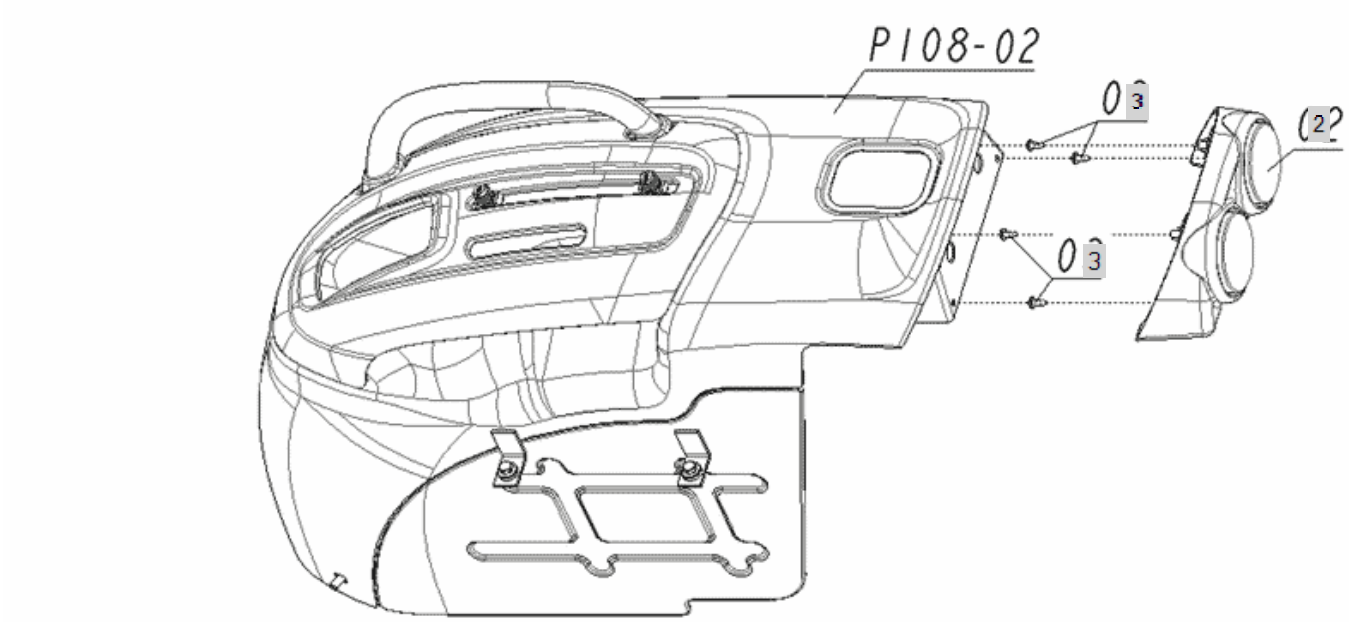

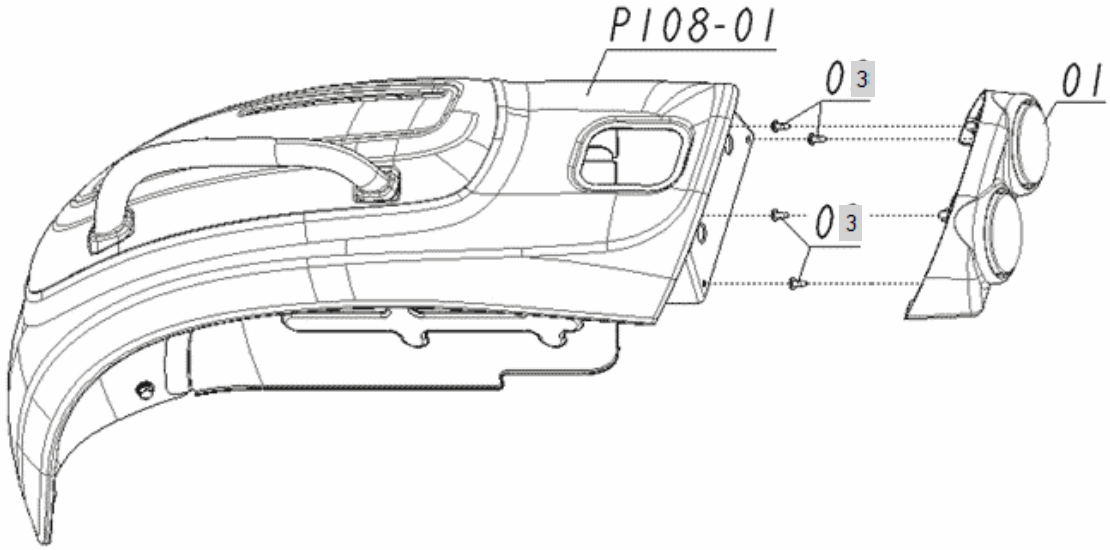

FIG 014-1 Branson 2400	TAIL LIGHT	Year/Month 2020/01

KeyNo.	Part Number	Part Name	Quantity	Other
1	FE17010000B	TAIL RAMP L ASS'Y	1	
2	FE17020000B	TAIL RAMP R ASS'Y	1	
3	TTD7090000A4	CROSSRECESSEDHEADTAPPINGSCREW	8	

FIG 014-2 Branson 2400	TAIL LIGHT(2017.10)	Year/Month 2020/01

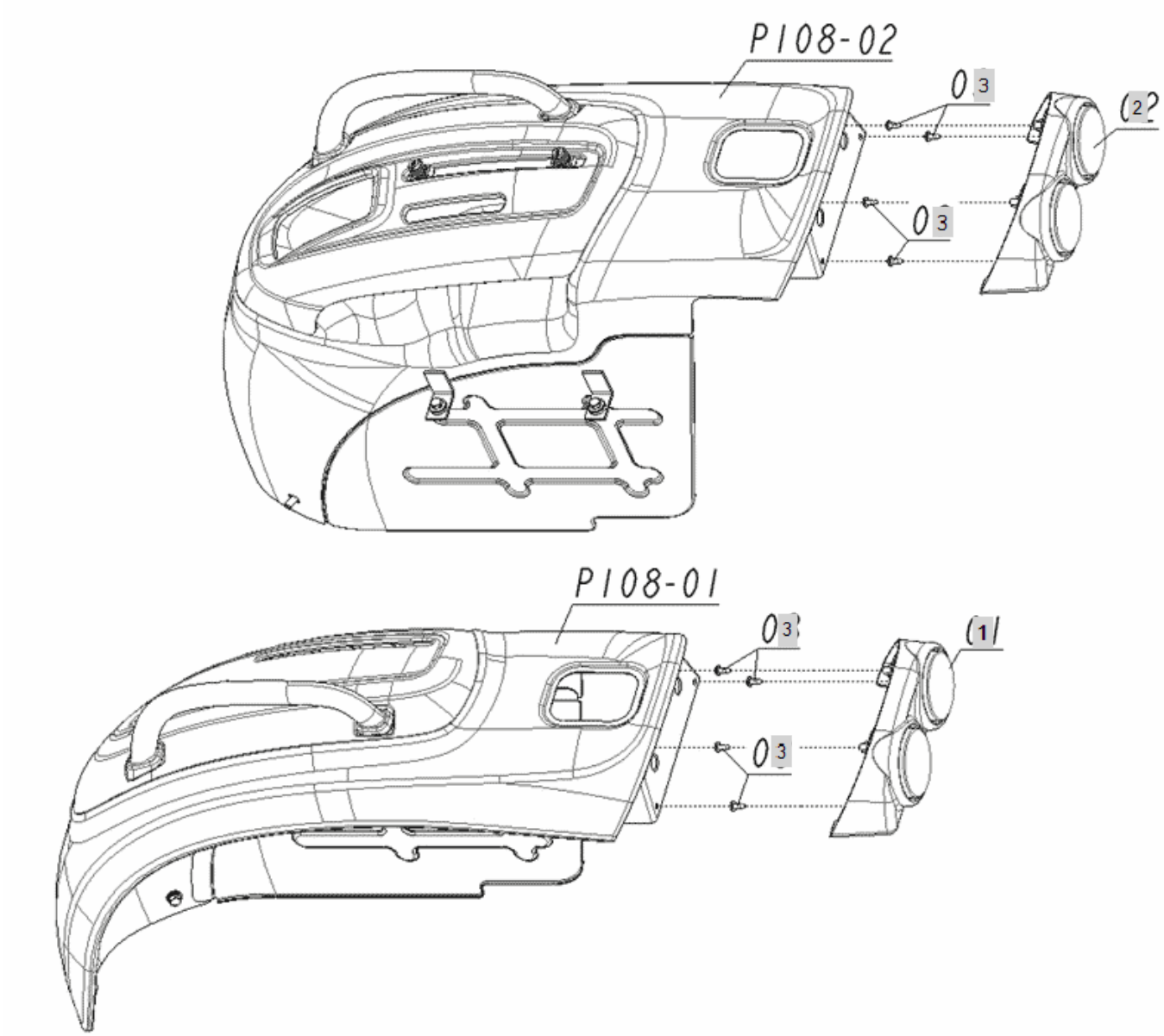

FIG 014-2 Branson 2400	TAIL LIGHT(2017.10)	Year/Month 2020/01

KeyNo.	Part Number	Part Name	Quantity	Other
1	TA00017211A	TAIL LAMP ASSY(LH) - EU TYPE	1	
2	TA00017212A	TAIL LAMP ASSY(RH) - EU TYPE	1	
3	TTD7090000A4	CROSSRECESSEDHEADTAPPINGSCREW	8	

FIG 015-1 Branson 2400	WINKER LAMP	Year/Month 2020/01

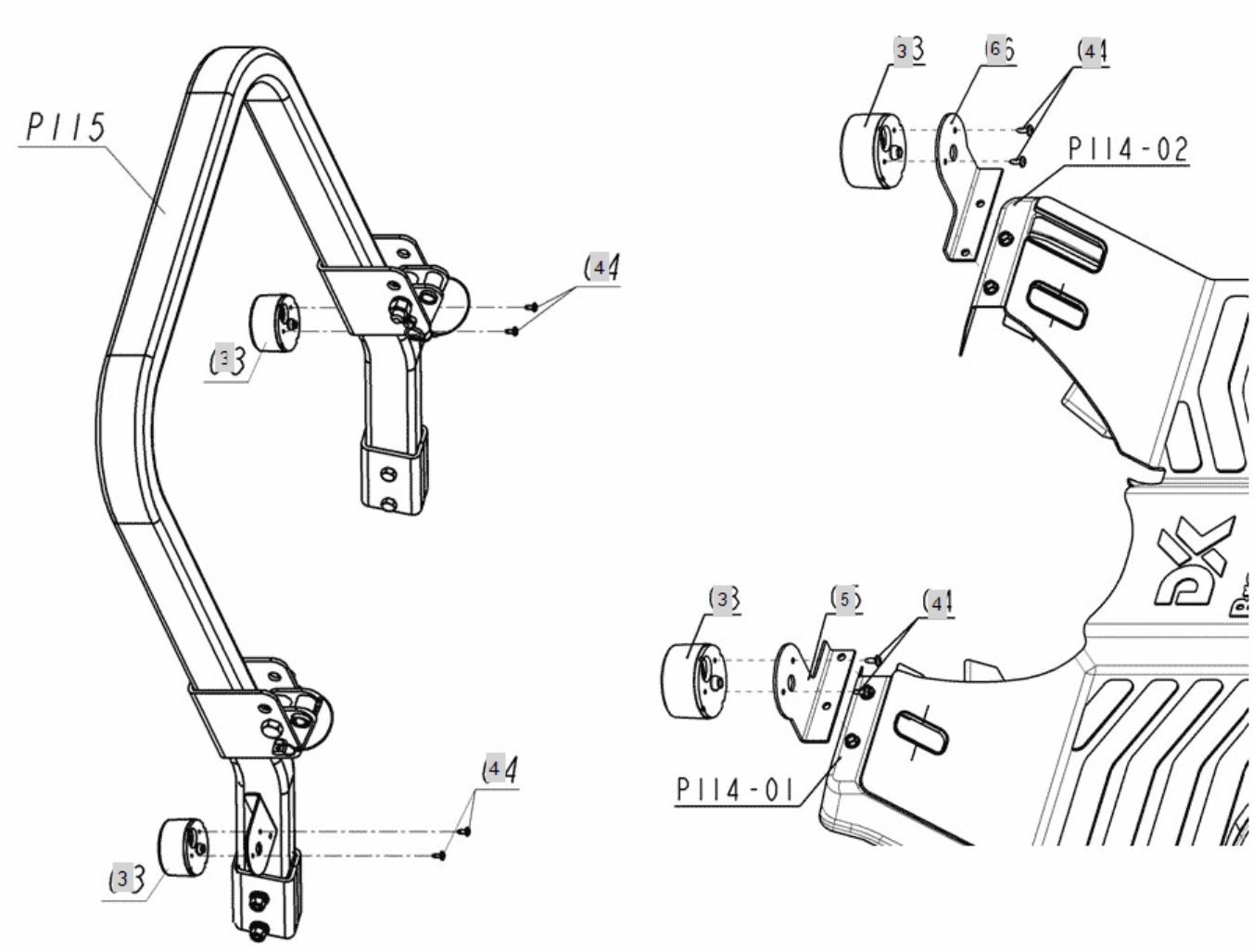

FIG 015-1 Branson 2400	WINKER LAMP	Year/Month 2020/01

KeyNo.	Part Number	Part Name	Quantity	Other
3	HA00000341A	TURN LAMP	2	
4	TTD7090000A4	CROSSRECESSEDHEADTAPPINGSCREW	4	
5	TA00019525A	DIRECTION BRAKET	1	
6	TA00019539A	DIRECTION BRAKET(R)	1	

FIG 015-2 Branson 2400	WINKER LAMP(2015.08)	Year/Month 2020/01

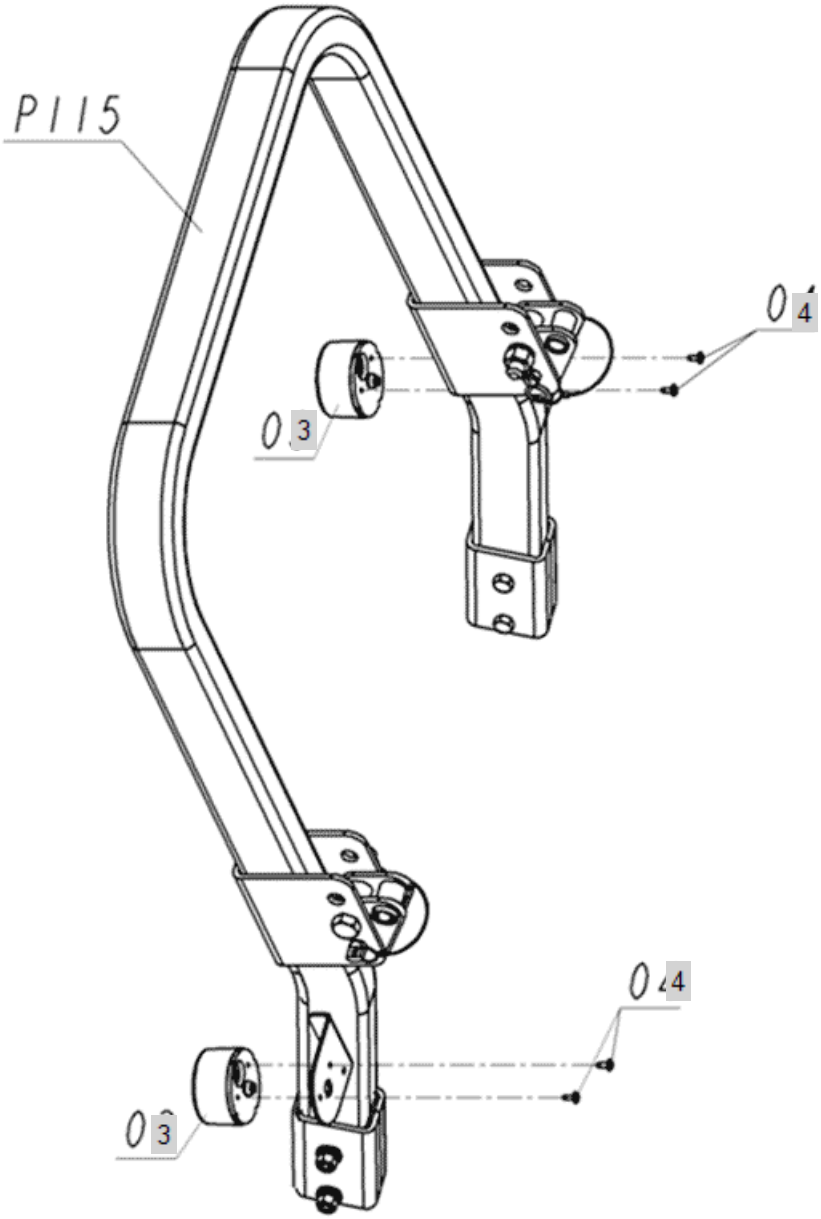

FIG 015-2 Branson 2400	WINKER LAMP(2015.08)	Year/Month 2020/01

KeyNo.	Part Number	Part Name	Quantity	Other
3	HA00000341A	TURN LAMP	2	
4	TTD7090000A4	CROSSRECESSEDHEADTAPPINGSCREW	4	

FIG 015-3 Branson 2400	WINKER LAMP(2019.12~)	Year/Month 2020/01

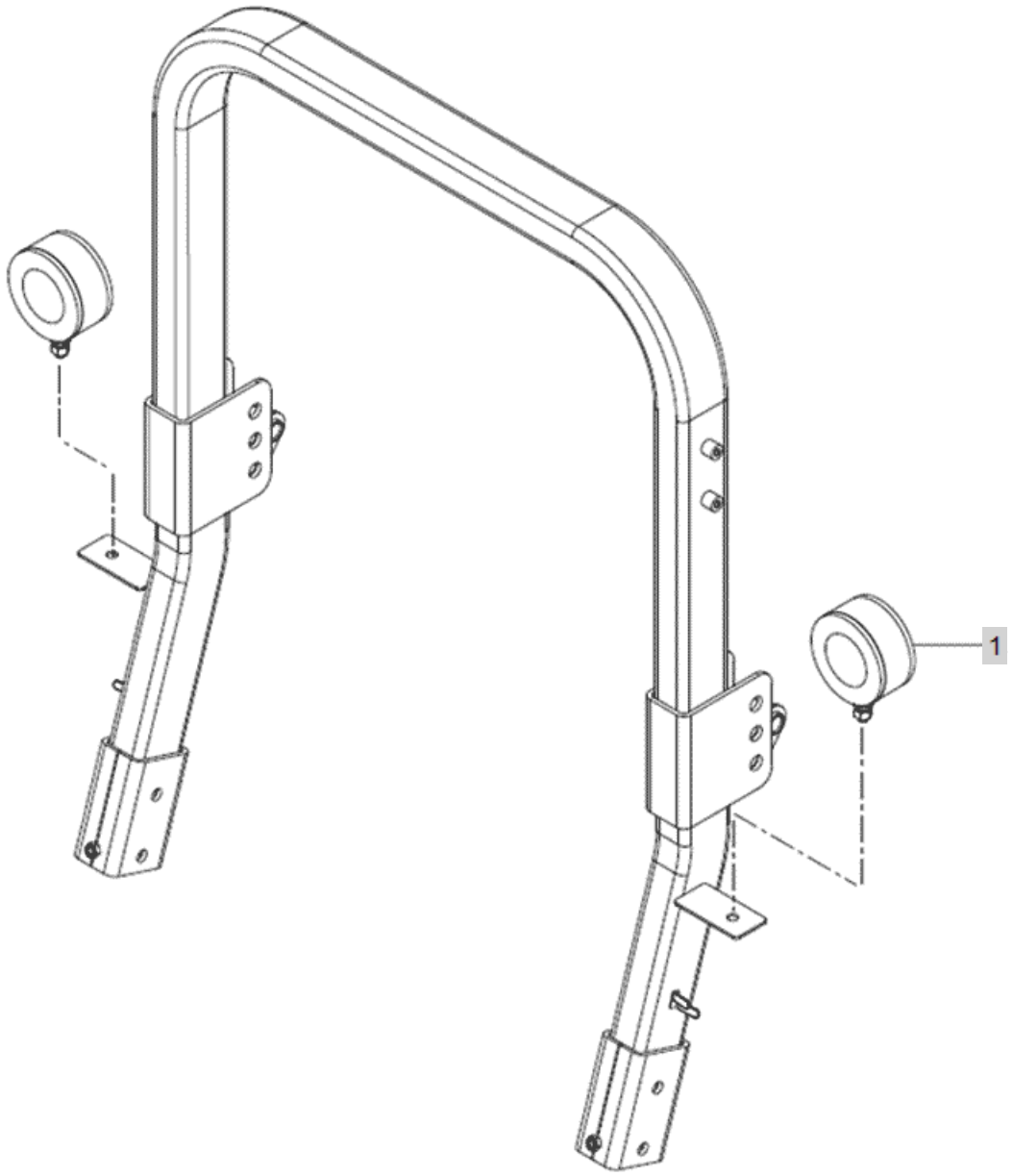

FIG 015-3 Branson 2400	WINKER LAMP(2019.12~)	Year/Month 2020/01

KeyNo.	Part Number	Part Name	Quantity	Other
1	HA00001756A	FRONT TURN SIGNAL LAMP	1	

FIG 016A-1 Branson 2400	ELECTRICAL WIRING	Year/Month 2020/01

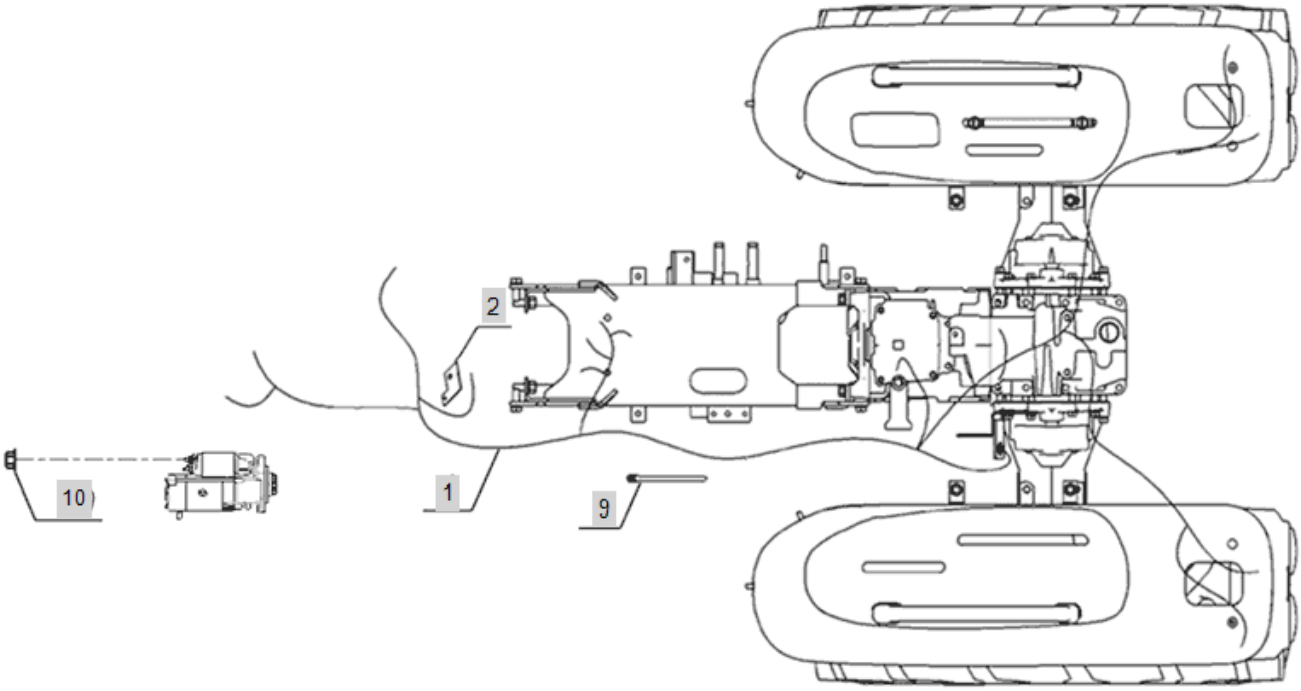

FIG 016A-1 Branson 2400	ELECTRICAL WIRING	Year/Month 2020/01

KeyNo.	Part Number	Part Name	Quantity	Other
1	HA00000014H	ASSY WIRE HARNESS	1	
2	FE19020000C	BRAKET	1	
9	TB39260000A4	BAND	5	
10	26337-050002		1	

FIG 016A-2 Branson 2400	16. ELECTRICAL WIRING	Year/Month 2020/01

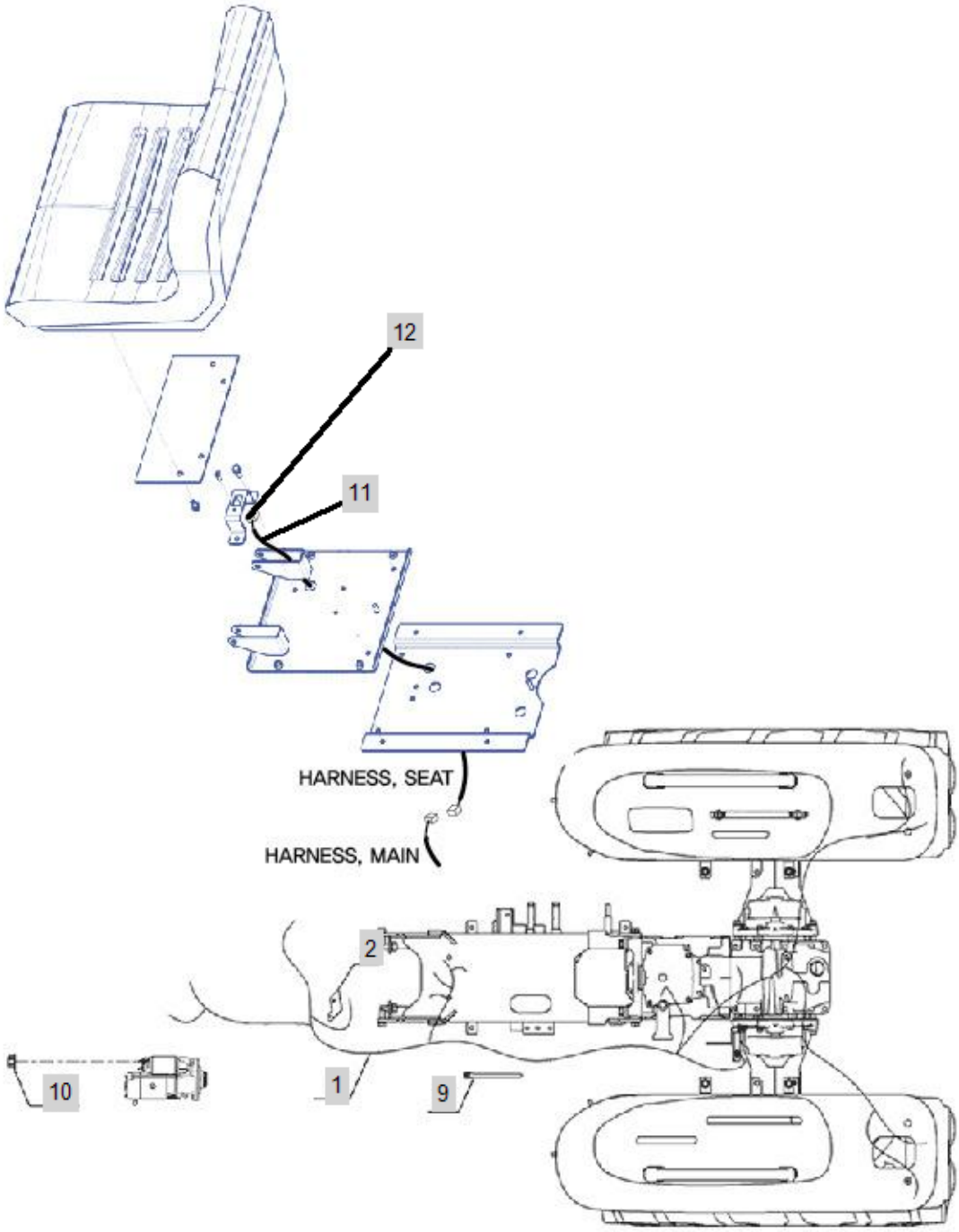

FIG 016A-2 Branson 2400	16. ELECTRICAL WIRING	Year/Month 2020/01

KeyNo.	Part Number	Part Name	Quantity	Other
1	HA00001674A	HARNESS	1	
1-1	HA00001331B	HARNESS	1	
2	FE19020000C	BRAKET	1	
9	TB39260000A4	BAND	5	
10	26337-050002		1	
11	HA00000111C	HARNESS, SEAT	1	
12	HA00000100A	SWITCH, SEAT SAFETY	1	

FIG 017. Branson 2400	CLUTCH	Year/Month 2020/01

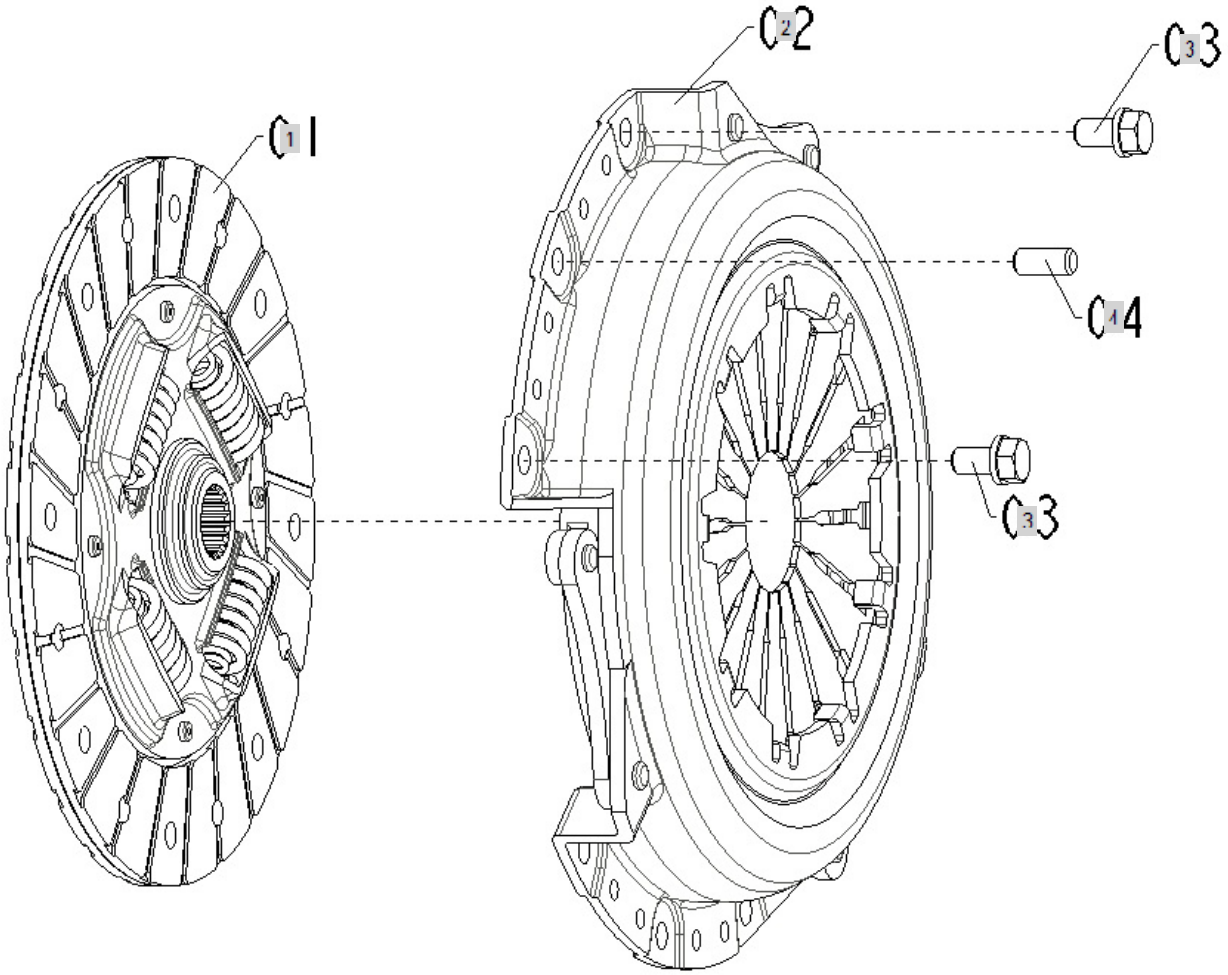

FIG 017. Branson 2400	CLUTCH	Year/Month 2020/01

KeyNo.	Part Number	Part Name	Quantity	Other
1	FE21010000A	CLUTCH DISC	1	
2	FE21020000A	CLUTCH COVER ASSY	1	
3	26013-080162	Bolt, Hexa (8-16)	6	
4	22351-080016	PIN, SPRING (8-16)	3	

FIG 018. Branson 2400	CLUTCH ROD & RELEASE	Year/Month 2020/01

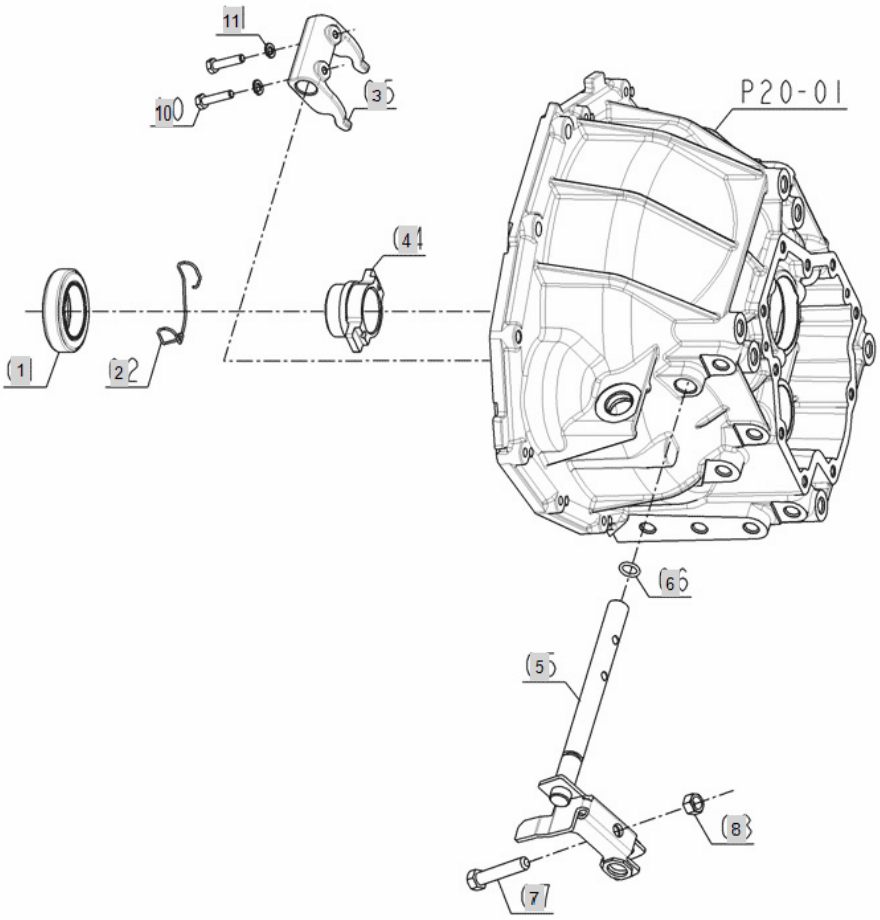

FIG 018. Branson 2400	CLUTCH ROD & RELEASE	Year/Month 2020/01

KeyNo.	Part Number	Part Name	Quantity	Other
1	FE22010000A	BEARING,RELEASE	1	
2	FE22020000A	HOLDER, BEARING	1	
3	TA00019426A	CLUTCH RELEASE FORK	1	
4	FE22040000A	SPRING,RELEASE	1	
5	FE22050000C	SHAFT, CLUTCH ROD	1	
6	24311-000120	O-RING, DYNAMIC (Φ12)	1	
7	26116-100504	HEXFLANGEBOLT	1	
8	26712-100002	HEX NUT	1	
10	TA00019440A	REAMER BOLT M6X28	2	
11	22217-060000	WASHER, SPRING (Φ 06)	2	

FIG 019. Branson 2400	CLUTCH PEDAL	Year/Month 2020/01

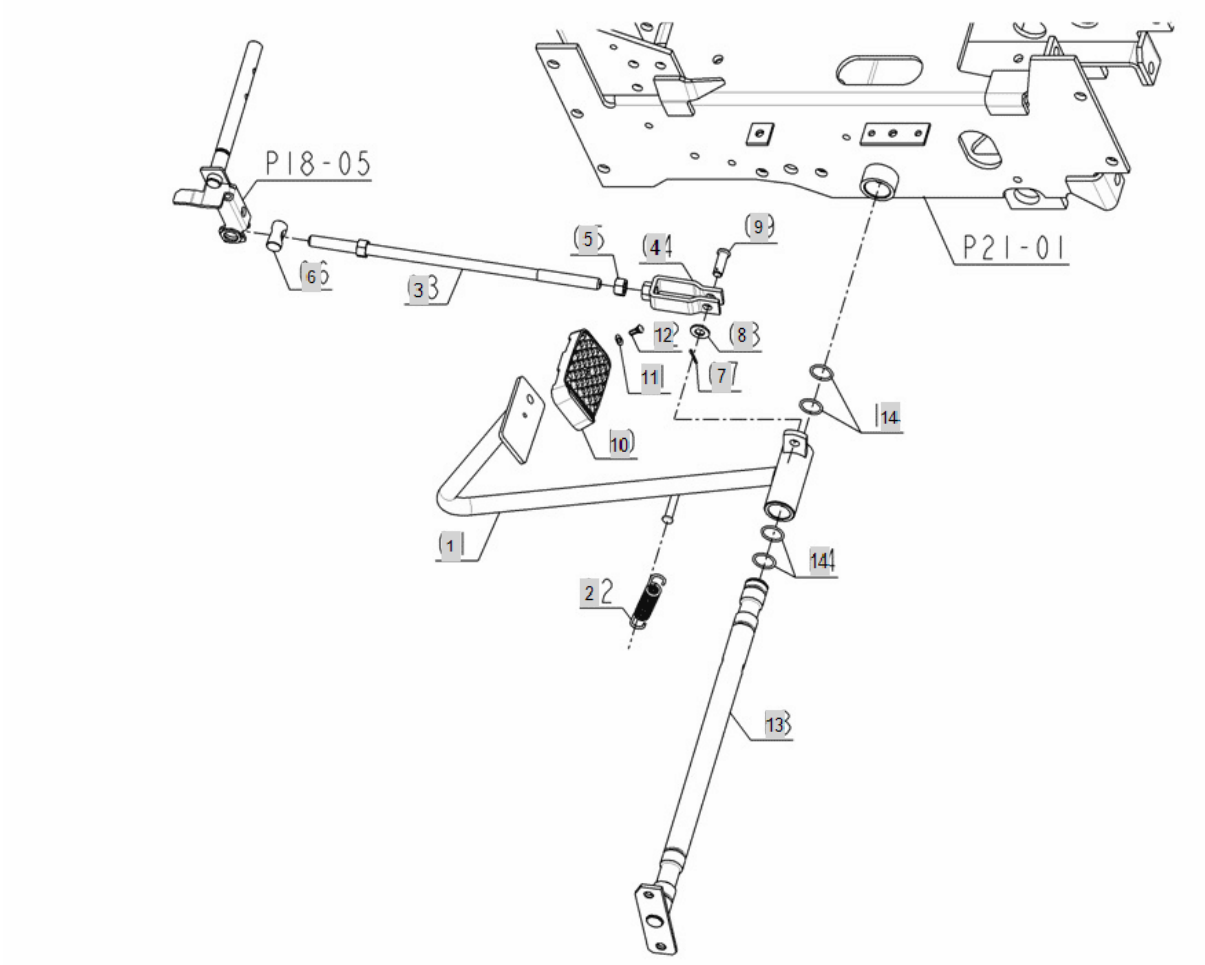

FIG 019. Branson 2400	CLUTCH PEDAL	Year/Month 2020/01

KeyNo.	Part Number	Part Name	Quantity	Other
1	FE23010000A	PEDAL,CLUTCH	1	
2	FE23030000A	SPRING,CLUTCH	1	
3	FE23050000A	CLUTCH ROD	1	
4	FE23060000A	U-JOINT	1	
5	TT67040000A4	NUT.LH	1	
6	FE23080000A	PIN	1	
7	22417-200160	PIN , COTTER (2-16)	1	
8	22127-100000	WASHER, PLAIN (Φ 10)	1	
9	22486-100240	PIN, FASTENER	1	
10	TC73050000A3	PEDALHEADCOVER	1	
11	TC73040000A4	WASHER(REVET)	1	
12	TC73030000A4	RIVET(PEDALHEAD)	1	
13	TA00017078A	Shaft, Pedal	1	
14	24311-000210	O-RING, DYNAMIC (Φ21)	4	

FIG 020A-1 Branson 2400	CLUTCH HOUSING	Year/Month 2020/01

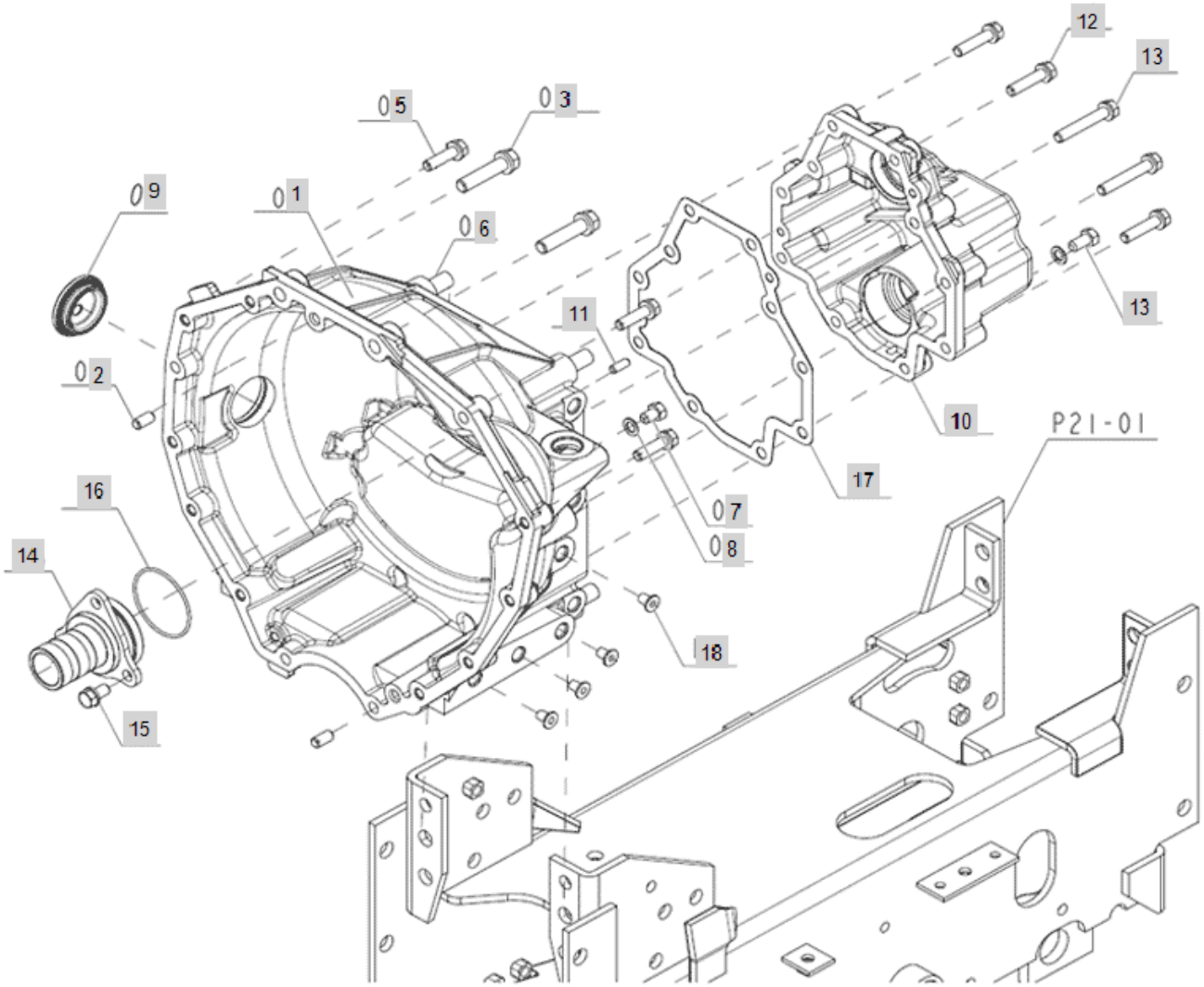

FIG 020A-1 Branson 2400	CLUTCH HOUSING	Year/Month 2020/01

KeyNo.	Part Number	Part Name	Quantity	Other
1	FE24010000B	Housing, Clutch	1	
2	22312-080140	PIN, DOWEL (8-14)	2	
3	26013-100452	HEX BOLT W/WASHER	2	
4	26013-080452	SCREW,CAPTIVEWASHERCAP	2	
5	26013-080302	HEX BOLT W/WASHER	11	
6	26216-120252	STUD BOLT	4	
7	26116-080122	SCREW,HEXAGONHEADCAP	1	
8	23414-080000	WASHER, PLAIN (Φ8)	1	
9	FE24100000A	CAP,SEAL	1	
10	FE24110000C	COVER CLUTCH_HOUSING	1	
11	22312-060140	PIN, DOWEL (6-14)	2	
12	26013-080352	SCREW,CAPTIVEWASHERCAP	4	
13	26013-080502	Bolt, Hexa (8-50)	6	
14	26116-080162	SCREW,HEXAGONHEADCAP	1	
15	FE24170000A	Case, Bearing	1	
16	26013-080162	Bolt, Hexa (8-16)	3	
17	24341-000530	O-RING, FIX (Φ53)	1	
18	FE24200000A	PACKING,CLUTCH HOUSING	1	
19	TB26070000A4	PLUG11	8	

FIG 020T-2 Branson 2400	CLUTCH HOUSING	Year/Month 2020/01

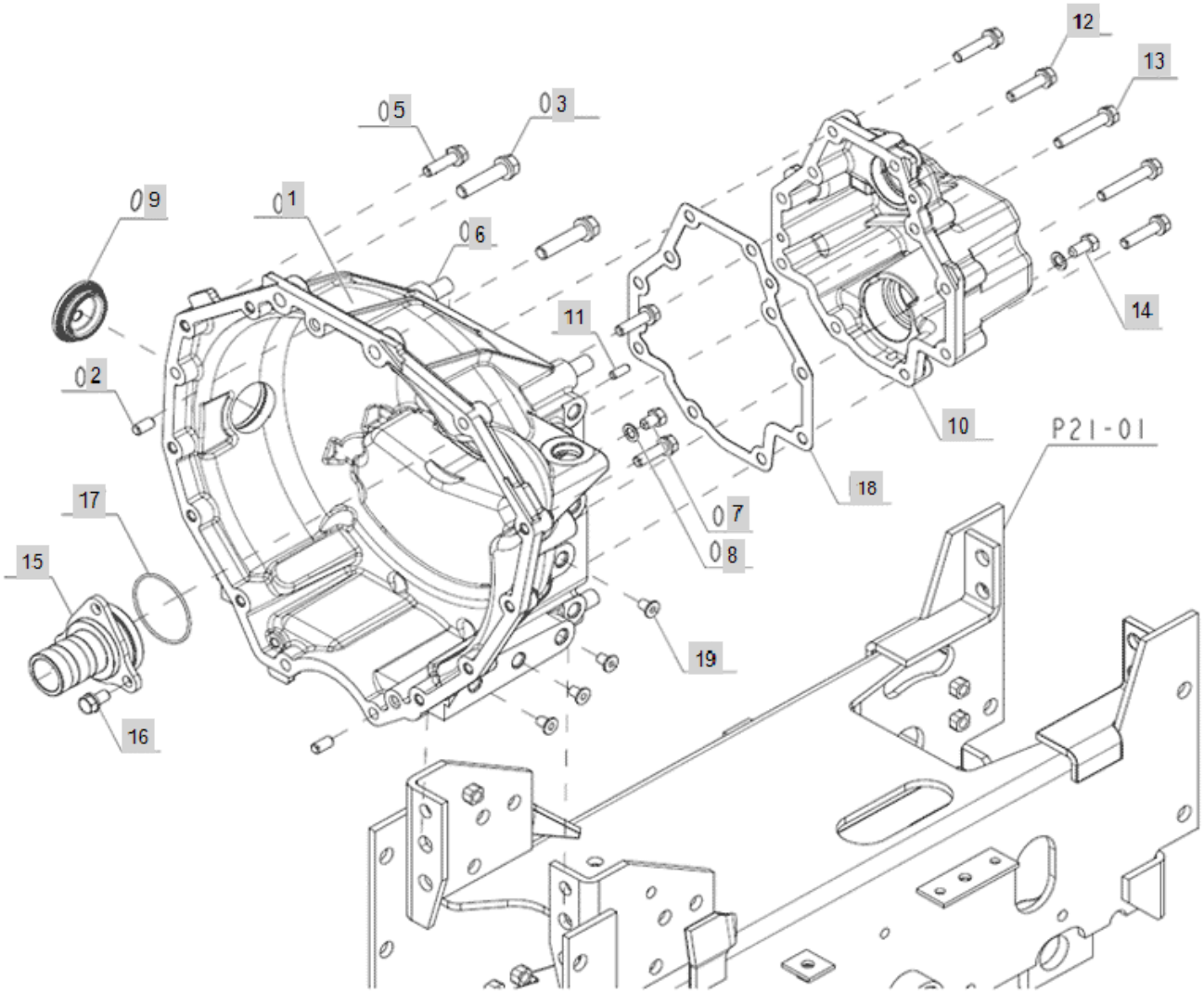

FIG 020T-2 Branson 2400	CLUTCH HOUSING	Year/Month 2020/01

KeyNo.	Part Number	Part Name	Quantity	Other
1	FE24010000B	Housing, Clutch	1	
2	22312-080140	PIN, DOWEL (8-14)	2	
3	26013-100452	HEX BOLT W/WASHER	2	
4	26013-080452	SCREW,CAPTIVEWASHERCAP	2	
5	26013-080302	HEX BOLT W/WASHER	11	
6	26216-120252	STUD BOLT	4	
7	26116-080122	SCREW,HEXAGONHEADCAP	1	
8	23414-080000	WASHER, PLAIN (Φ8)	1	
9	FE24100000A	CAP,SEAL	1	
10	FE24110000C	COVER CLUTCH_HOUSING	1	
11	22312-060140	PIN, DOWEL (6-14)	2	
12	26013-080352	SCREW,CAPTIVEWASHERCAP	4	
13	26013-080502	Bolt, Hexa (8-50)	6	
14	26116-080162	SCREW,HEXAGONHEADCAP	1	
15	FE24170000A	Case, Bearing	1	
16	26013-080162	Bolt, Hexa (8-16)	3	
17	24341-000530	O-RING, FIX (Φ53)	1	
18	FE24200000A	PACKING,CLUTCH HOUSING	1	
19	TB26070000A4	PLUG11	8	

FIG 021A-1 Branson 2400	CENTER FRAME-2400(H)	Year/Month 2020/01

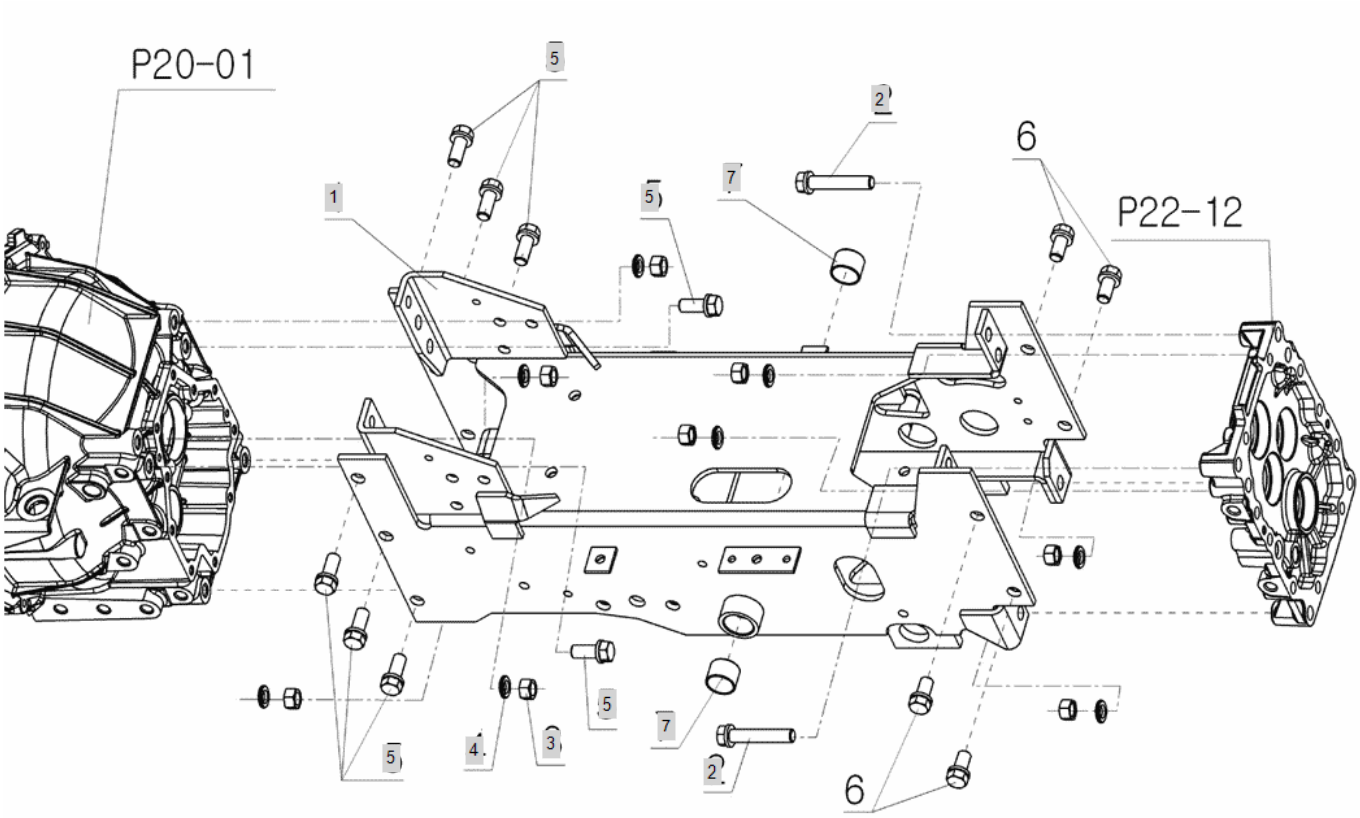

FIG 021A-1 Branson 2400	CENTER FRAME-2400(H)	Year/Month 2020/01

KeyNo.	Part Number	Part Name	Quantity	Other
1	FE25010000F		1	
2	26013-120652	BOLT	2	
3	26716-120002	BOLT,CYLINDER HEAD(B)	8	
4	22217-120000	WASHER, SPRING (Φ 12)	8	
5	26013-120302	HEX BOLT W/WASHER	12	
7	24550-025200	BUSH,DRY	2	

FIG 021A-2 Branson 2400	CENTER FRAME-2400(2018.04~)	Year/Month 2020/01

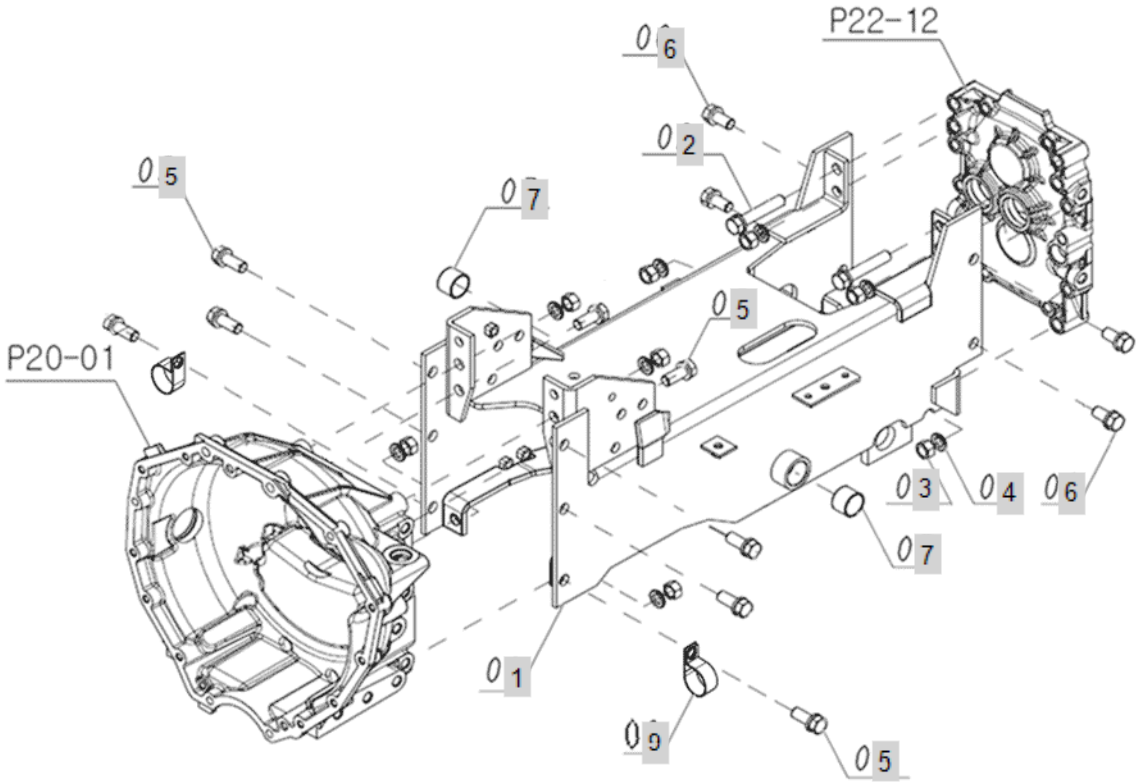

FIG 021A-2 Branson 2400	CENTER FRAME-2400(2018.04~)	Year/Month 2020/01

KeyNo.	Part Number	Part Name	Quantity	Other
1	TA0054902A		1	
2	26013-120652	BOLT	2	
3	26716-120002	BOLT,CYLINDER HEAD(B)	8	
4	22217-120000	WASHER, SPRING (Φ 12)	8	
5	26013-120302	HEX BOLT W/WASHER	8	
6	26013-120252	SCREW,CAPTIVEWASHERCAP	4	
7	24550-025200	BUSH,DRY	2	
9	TA00003081A	CLIP	2	

FIG 022A-1 Branson 2400	TRANSMISSION CASE (HYDROSTAT)-2400	Year/Month 2020/01

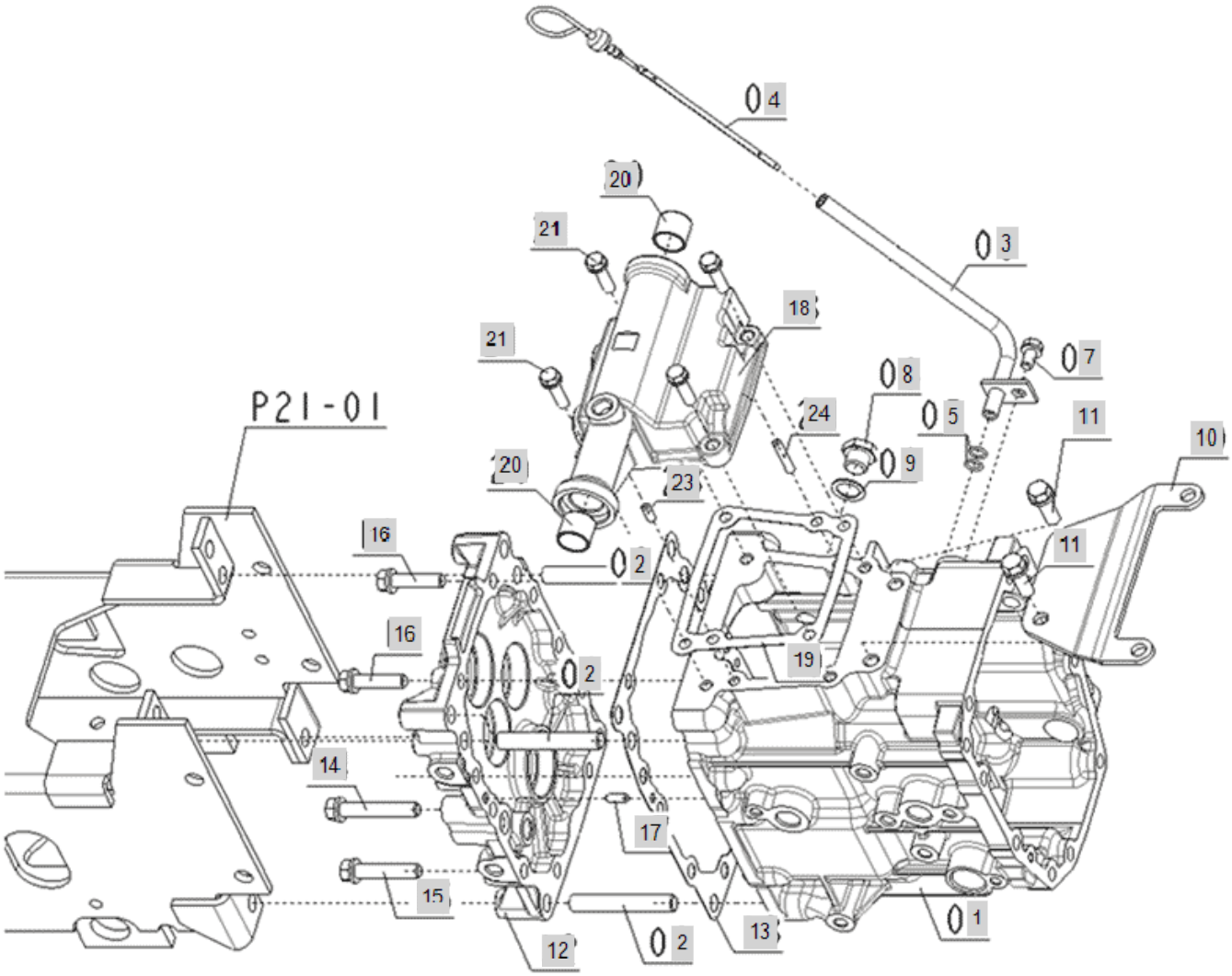

FIG 022A-1 Branson 2400	TRANSMISSION CASE (HYDROSTAT)-2400	Year/Month 2020/01

KeyNo.	Part Number	Part Name	Quantity	Other
1	FE27010000F	CASE, TRANSMISSION	1	
2	26216-120602	STUD,BOLT	4	
3	FE27030000A	PIPE,OIL GAUGE	1	
4	FE27040000A	GAUGE,OIL	1	
5	24311-000100	O-RING, DYNAMIC (Φ10)	2	
7	26013-080162	Bolt, Hexa (8-16)	1	
8	23887-160002	PLUG	1	
9	23414-160000	WASHER,SEALING	1	
10	FE27100000A	BRACKET	1	
11	26013-100302	SCREW,CAPTIVEWASHERCAP	2	
12	FE27120000A	Cover, Transmission Front	1	
13	FE27130000A	PACKING,FORNT COVER	1	
14	26013-100602	BOLT	1	
15	26013-100502	BOLT,W/SW	4	
16	26013-100402	Bolt, Hexa (10-40)	5	
17	22312-060140	PIN, DOWEL (6-14)	2	
18	FE27170000A	COVER ASSY,UPPER	1	
19	FE27180000A	PACKING,UP-COVER	1	
20	24550-020200	DRY BUSH (20X20)	2	
21	26013-080302	HEX BOLT W/WASHER	4	
23	22312-060140	PIN, DOWEL (6-14)	1	
24	22312-060320	PIN	1	

FIG 024A Branson 2400	DIFFERENTIAL GEAR CASE_2400(h)	Year/Month 2020/01

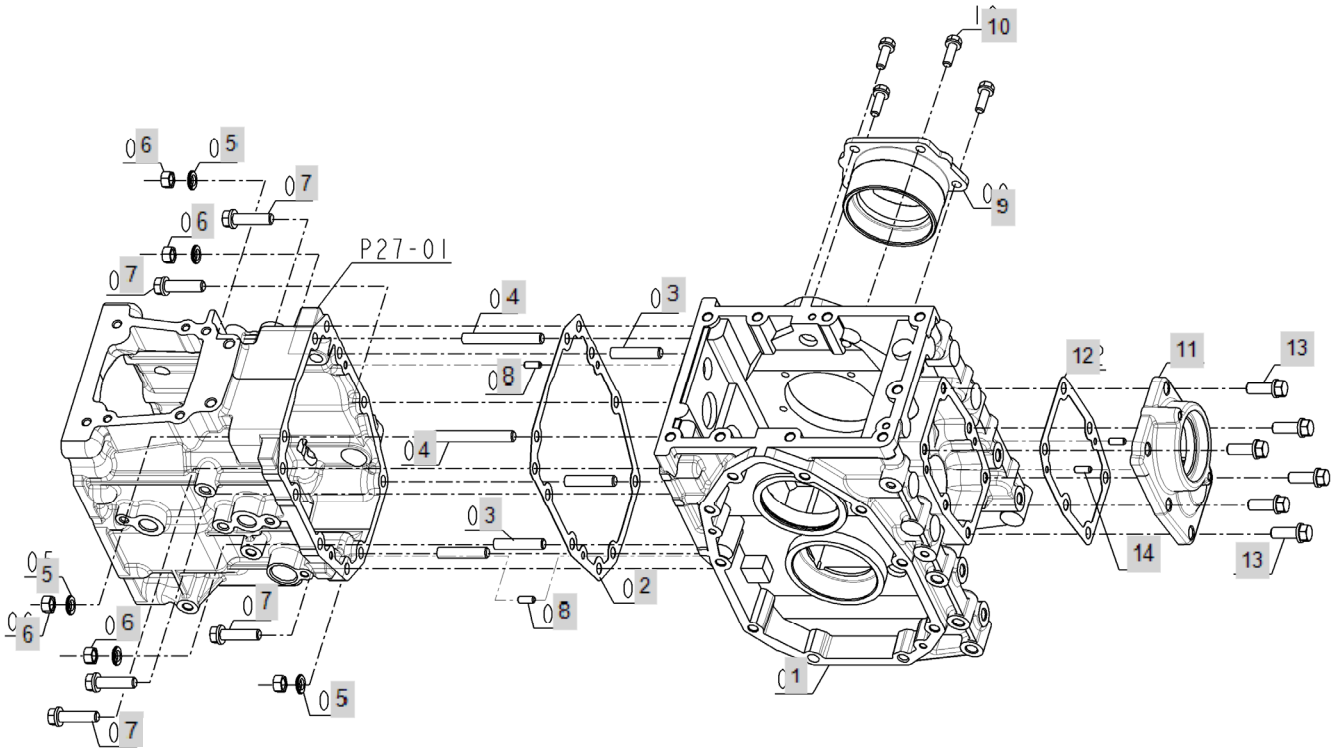

FIG 024A Branson 2400	DIFFERENTIAL GEAR CASE_2400(h)	Year/Month 2020/01

KeyNo.	Part Number	Part Name	Quantity	Other
1	FE29010000C	CASE, DIFF. GEAR	1	
2	FE29020000A	PACKING, CASE.DIFF.GEAR	1	
3	26216-100352	BOLT	4	
4	26216-100652	STUD,BOLT	2	
5	22217-100000	WASHER, SPRING (Φ 10)	6	
6	26716-100002	Nut, Hexa (Φ10)	6	
7	26013-100402	Bolt, Hexa (10-40)	5	
8	22312-060140	PIN, DOWEL (6-14)	2	
9	FE29080000A	HOLDER	1	
10	26013-080252	Bolt, Hexa (8-25)	4	
11	FE29100000A	COVER,REAR	1	
12	FE29110000A	PACKING,REAR COVER	1	
13	26013-100302	SCREW,CAPTIVEWASHERCAP	6	
14	22312-060140	PIN, DOWEL (6-14)	2	

FIG 025-1 Branson 2400	25. REAR CASE	Year/Month 2020/01

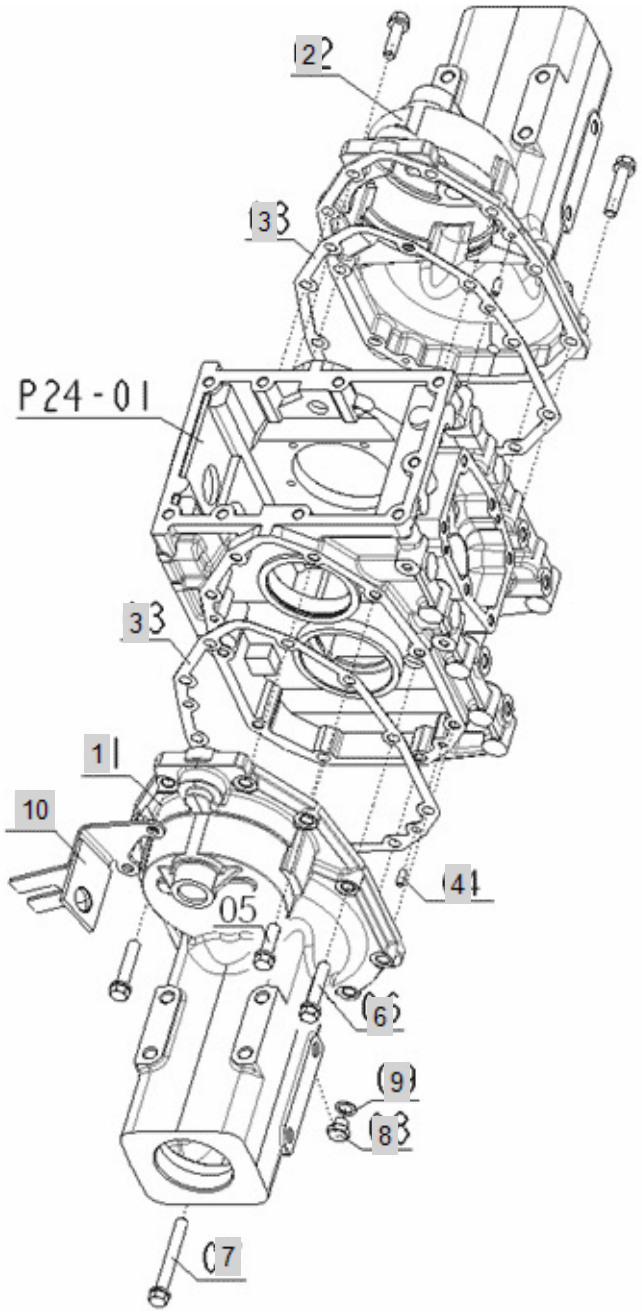

FIG 025-1 Branson 2400	25. REAR CASE	Year/Month 2020/01

KeyNo.	Part Number	Part Name	Quantity	Other
1	FE30010000A	CASE, AXLE LH	1	
2	FE30020000A	CASE, AXLE RH	1	
3	FE30030000A	PACKING, REAR AXLE CASE	2	
4	22312-060140	PIN, DOWEL (6-14)	4	
5	26013-100352	Bolt, Hexa (10-35)	8	
6	26013-100502	BOLT,W/SW	10	
7	26013-100802	HEX BOLT W/WASHER	2	
8	23887-120002	BOLT	2	
9	23414-120000	WASHER, PLAIN (Φ 12)	2	
10	FE30120000A	STAY NUETRAL SWITCH	1	

FIG 025-2 Branson 2400	25. REAR CASE(2018.09~)	Year/Month 2020/01

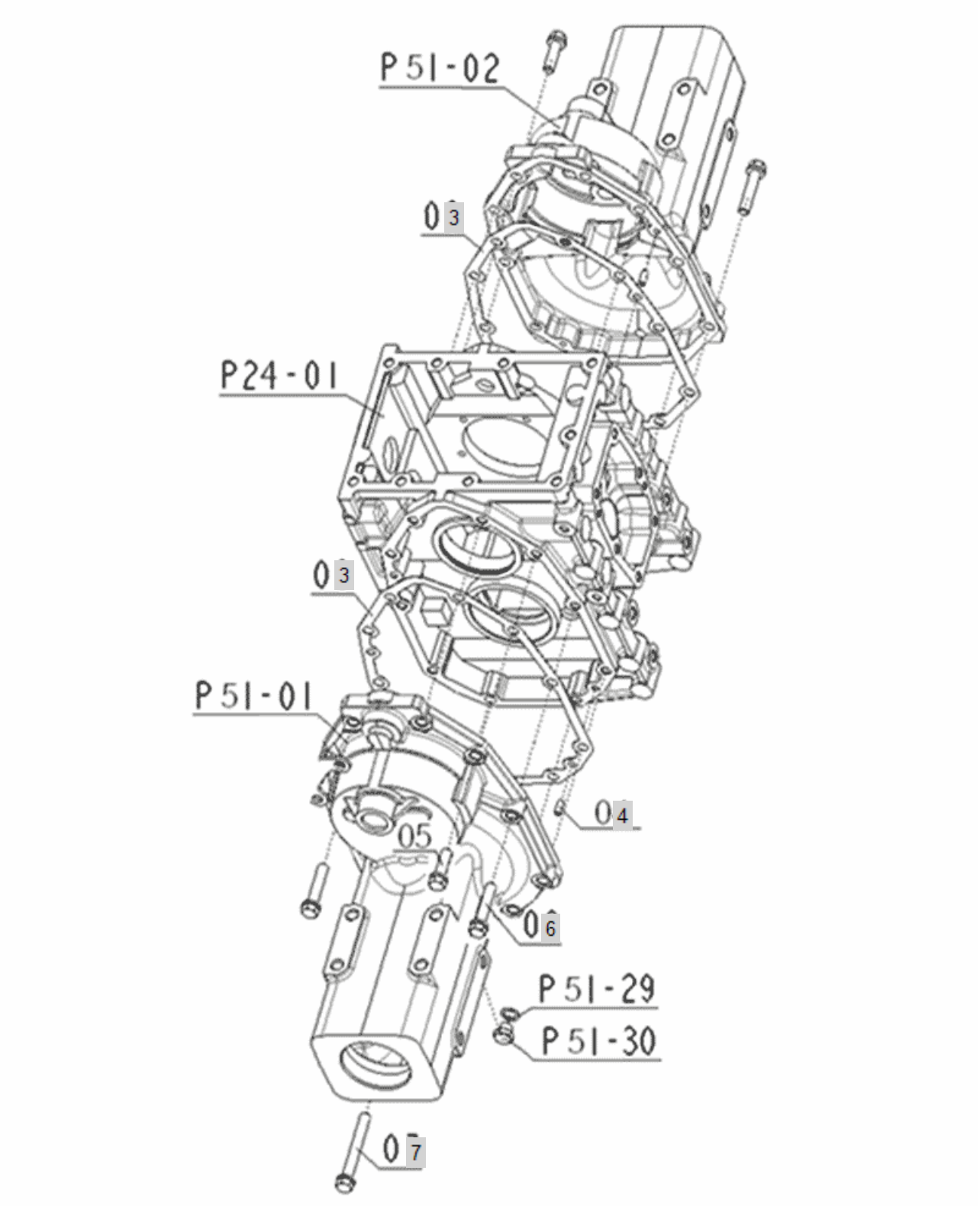

FIG 025-2 Branson 2400	25. REAR CASE(2018.09~)	Year/Month 2020/01

KeyNo.	Part Number	Part Name	Quantity	Other
3	FE30030000A	PACKING, REAR AXLE CASE	2	
4	22312-060140	PIN, DOWEL (6-14)	4	
5	26013-100352	Bolt, Hexa (10-35)	8	
6	26013-100502	BOLT,W/SW	10	
7	26013-100802	HEX BOLT W/WASHER	2	

FIG 026. Branson 2400	CLUTCH SHAFT	Year/Month 2020/01

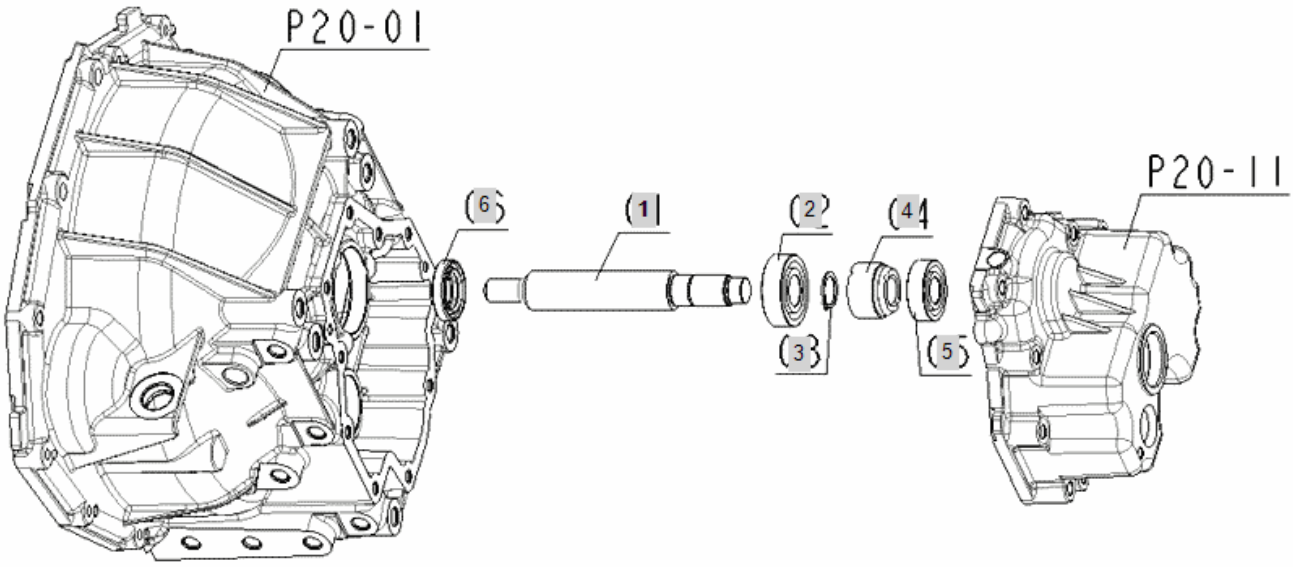

FIG 026. Branson 2400	CLUTCH SHAFT	Year/Month 2020/01

KeyNo.	Part Number	Part Name	Quantity	Other
1	FE31010000A	SHAFT,CLUTCH	1	
2	24101-062044	Bearing, Ball (#6204)	1	
2-1	TA00016550A	BALL BEARING	1	
3	22242-000200	SNAP RING, SHAFT (Φ 20)	1	
4	FE31040000A	GEAR, CLUTCH SHAFT	1	
5	24101-062034	Bearing, Ball (#6203)	1	
5-1	TA00016549A	BALL BEARING	1	
6	FE31060000A	OIL SEAL25*40*8	1	

FIG 027A Branson 2400	PROPELLER SHAFT	Year/Month 2020/01

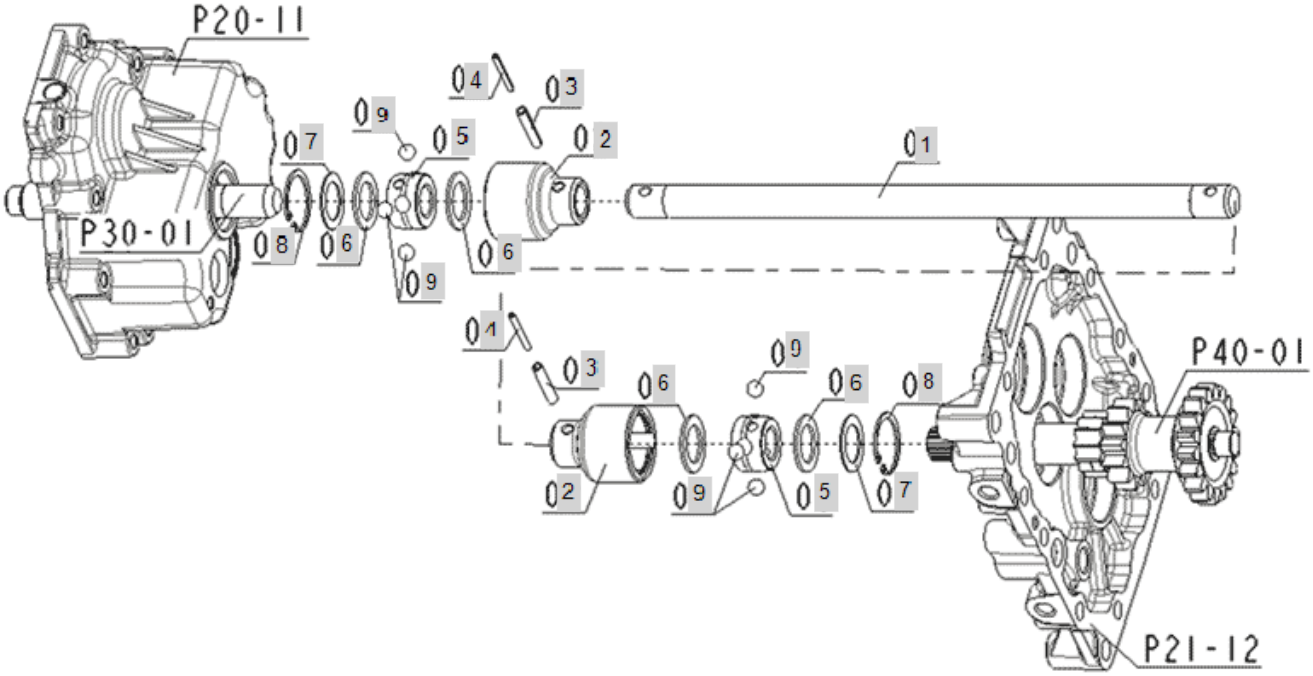

FIG 027A Branson 2400	PROPELLER SHAFT	Year/Month 2020/01

KeyNo.	Part Number	Part Name	Quantity	Other
1	FE32010000A	SHAFT, PROPELLER	1	
2	FE32020000A	COUPLING,BALL OUTER	2	
3	22351-060032	PIN, SPRING (6-32)	2	
4	22351-035032	PIN, SPRING (3.5-32)	2	
5	FE32050000A	COUPLING,BALL INNER	2	
6	FE32060000A	GASKET, BALL JOINT	4	
7	FE32070000A	SUPPORT,GASKET	2	
8	22252-000350	RING, CIRCLIP (Φ 35)	2	
9	24190-120001	STEELBALL	8	

FIG 030A Branson 2400	FRONT SHAFT	Year/Month 2020/01

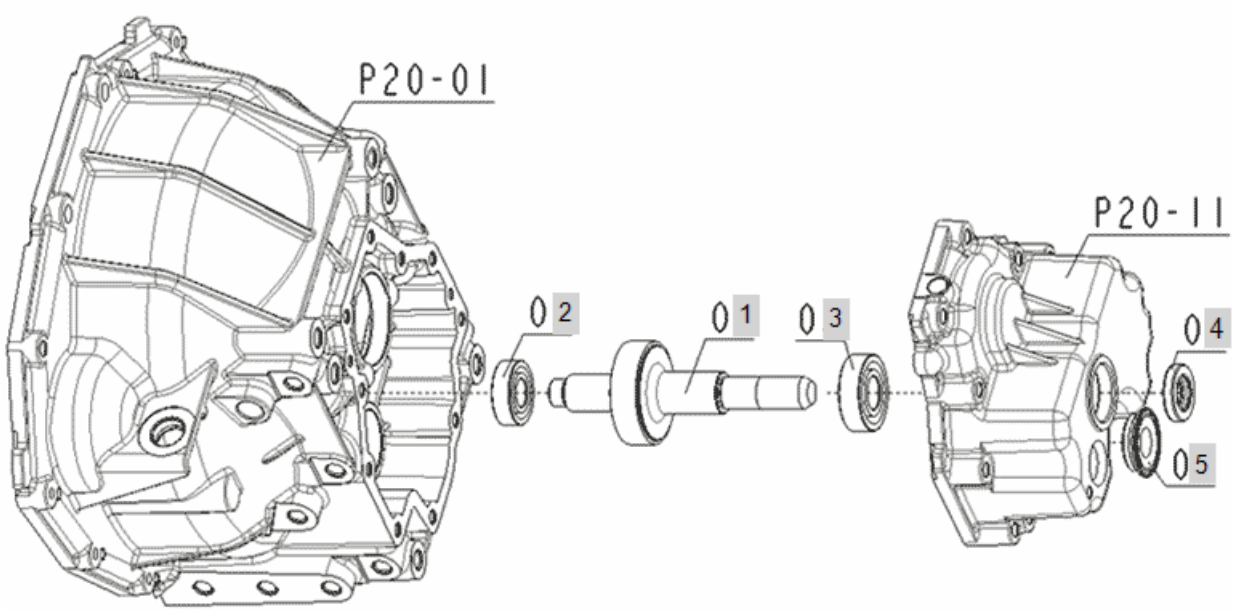

FIG 030A Branson 2400	FRONT SHAFT	Year/Month 2020/01

KeyNo.	Part Number	Part Name	Quantity	Other
1	FE35010000A	SHAFT, FRONT	1	
2	RR19170000A3	BEARING,BALL	1	
3	24101-062044	Bearing, Ball (#6204)	1	
4	FE35040000A	OIL SEAL20*35*7	1	
5	FE35050000A	CAP, SEAL	1	

FIG 032A-1 Branson 2400	32. PTO SHAFT	Year/Month 2020/01

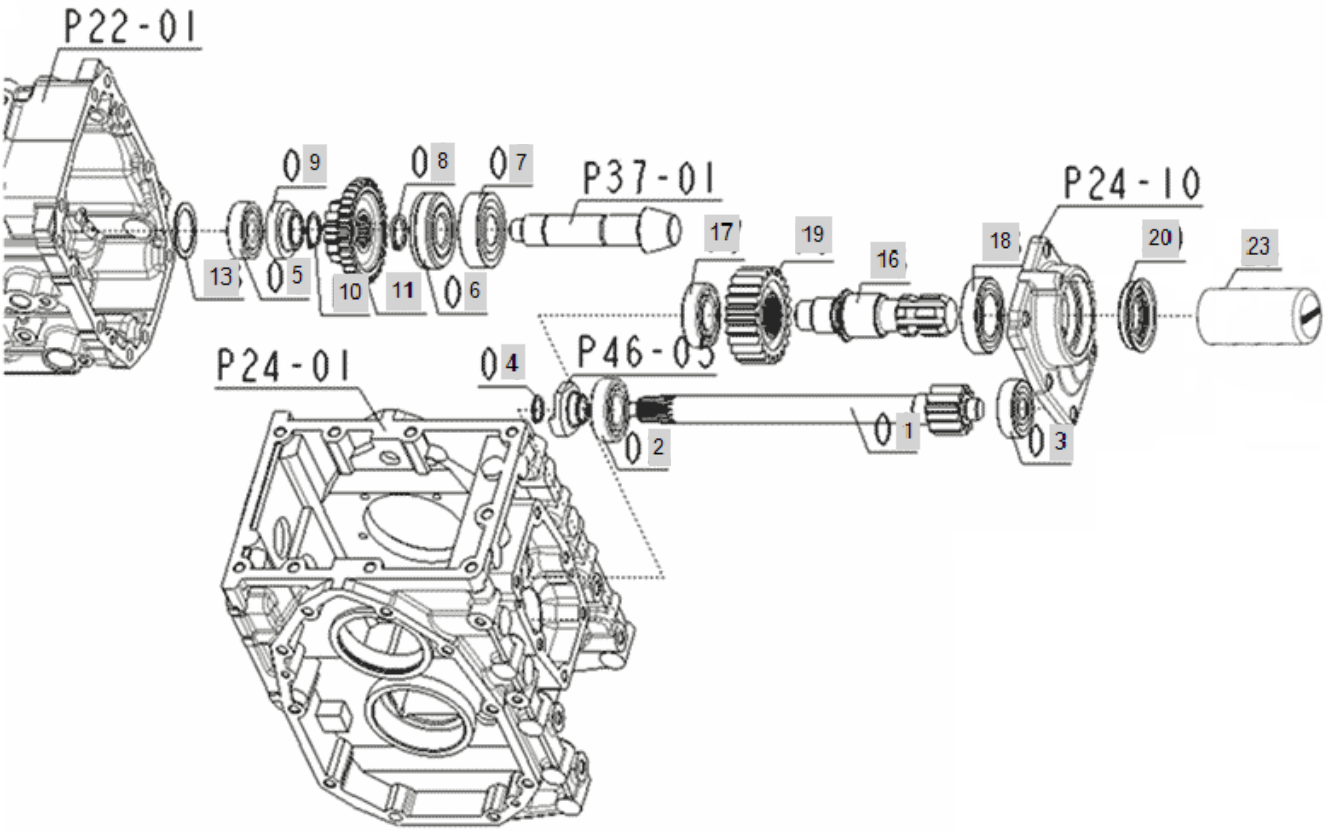

FIG 032A-1 Branson 2400	32. PTO SHAFT	Year/Month 2020/01

KeyNo.	Part Number	Part Name	Quantity	Other
1	FE37010000A	GEAR SHAFT 11T	1	
2	TT58010000A4	BALL BEARING (6205HL)	1	
3	24101-063034	BALL BEARING #6303	1	
4	22242-000190	SNAP RING, SHAFT (Φ 19)	1	
5	24510-730320	BALLBEARING,ANGULAR	1	
6	24121-063054	BALLBEARING	1	
7	TA00016555A	BALL BEARING	1	
8	FE37080000B	CIR CLIP, EXTERNAL	1	
9	FE37090000A	GEAR,4WD(13)	1	
10	22242-000250	SNAP RING, SHAFT (Φ 25)	1	
11	TA00031467B	GEAR(12T-32T)	1	
13	FE37130000A	SHIM(1.4)	1	
16	FE37160000B	SHAFT, PTO	1	
17	TT58010000A4	BALL BEARING (6205HL)	1	
18	24101-060074	Bearing, Ball (#6007)	1	
19	FE37190000A	GEAR 24T	1	
20	FE37200000A	OIL SEAL, PTO (35X55X9/10.5)	1	
23	TA00046868A	COVER, PTO	1	

FIG 032A-2 Branson 2400	32. PTO SHAFT(2018.03~)	Year/Month 2020/01

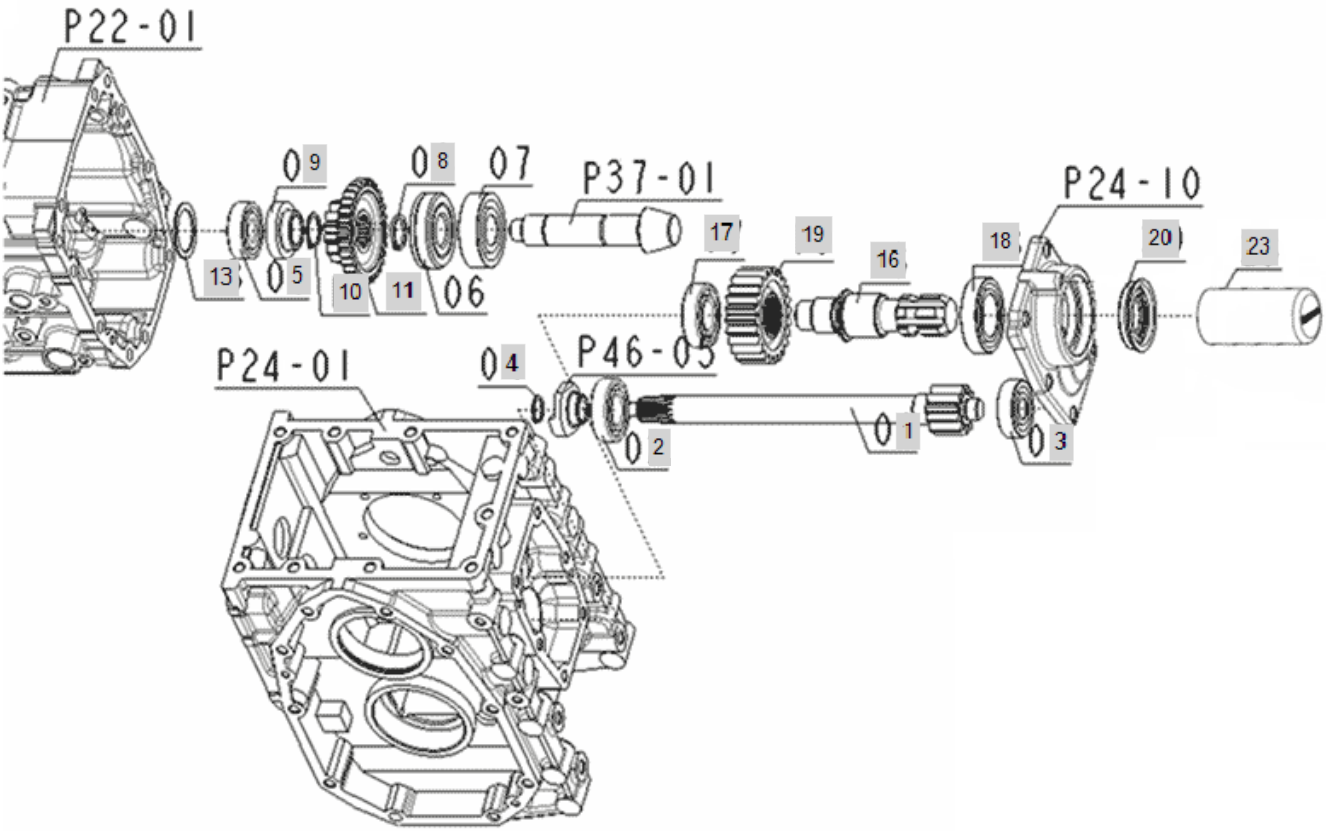

FIG 032A-2 Branson 2400	32. PTO SHAFT(2018.03~)	Year/Month 2020/01

KeyNo.	Part Number	Part Name	Quantity	Other
1	FE37010000A	GEAR SHAFT 11T	1	
2	TT58010000A4	BALL BEARING (6205HL)	1	
3	24101-063034	BALL BEARING #6303	1	
4	22242-000190	SNAP RING, SHAFT (Φ 19)	1	
5	24510-730320	BALLBEARING,ANGULAR	1	
8	FE37080000B	CIR CLIP, EXTERNAL	1	
9	FE37090000A	GEAR,4WD(13)	1	
10	22242-000250	SNAP RING, SHAFT (Φ 25)	1	
11	TA00031467B	GEAR(12T-32T)	1	
13	FGE8040000A4	WASHER(37X46X1.2T)	1	
16	FE37160000B	SHAFT, PTO	1	
17	TT58010000A4	BALL BEARING (6205HL)	1	
18	24101-060074	Bearing, Ball (#6007)	1	
19	FE37190000A	GEAR 24T	1	
20	FE37200000A	OIL SEAL, PTO (35X55X9/10.5)	1	
23	TA00046868A	COVER, PTO	1	

FIG 034A Branson 2400	MID PTO	Year/Month 2020/01

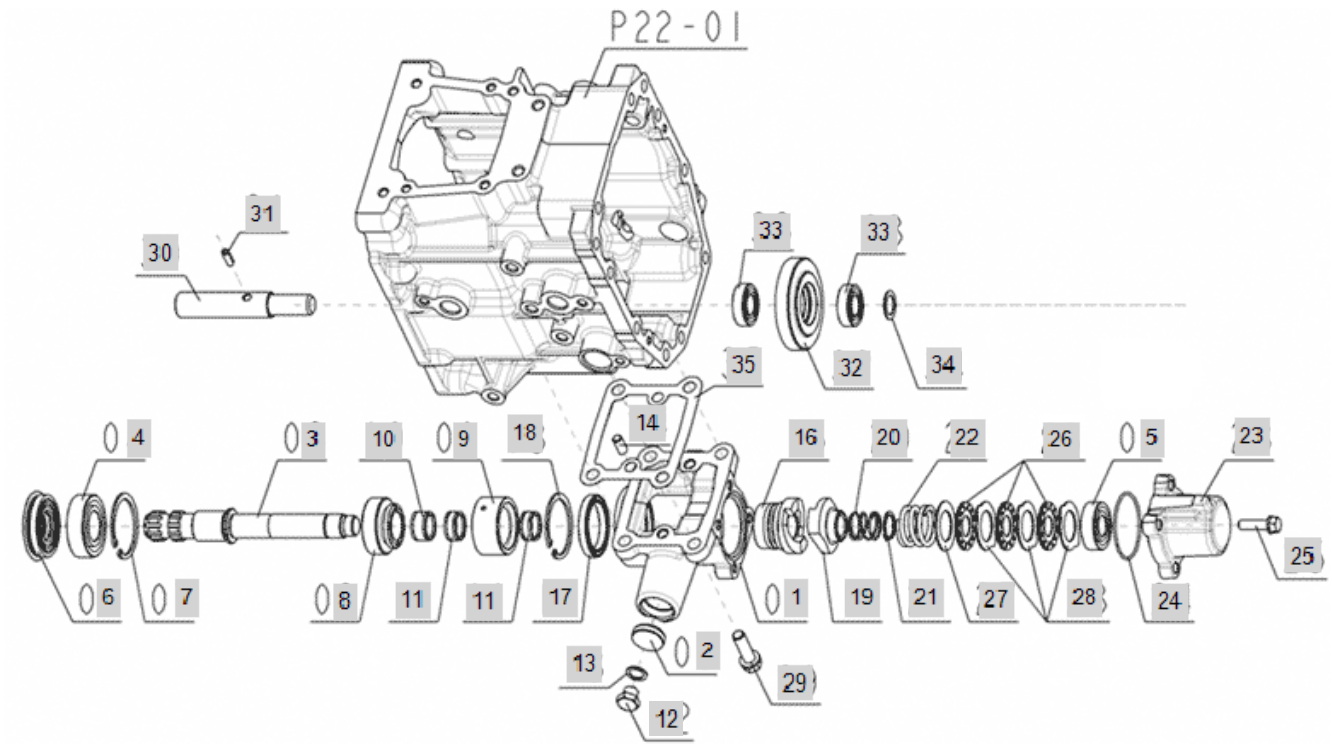

FIG 034A Branson 2400	MID PTO	Year/Month 2020/01

KeyNo.	Part Number	Part Name	Quantity	Other
1	FE39010000A	Case, PTO Middle	1	
2	FE39020000A	CAP,SEAL	1	
3	FE39030000A	SHAFT,MID PTO	1	
4	24101-062054	Bearing, Ball (#6205)	1	
5	24101-062034	Bearing, Ball (#6203)	1	
6	FE39060000A	Seal, Mid PTO Oil (25-52-9/11)	1	
7	22252-000520	RING, CIRCLIP (Φ 52)	1	
8	FE39080000A	GEAR 11T,MID PTO	1	
9	FE39090000A	COUPLING,MID PTO	1	
10	24161-202413	NEEDLE BEARING	1	
11	24161-202410	Bearing, Needle (20-24-10)	1	
12	23887-120002	BOLT	1	
13	23414-120000	WASHER, PLAIN (Φ 12)	1	
14	22312-080160	PIN, DOWEL (8-16)	1	
16	FE39160000A	Cam,One Way Clutch	1	
17	TA00016556A	BALL BEARING	1	
18	22252-000520	RING, CIRCLIP (Φ 52)	1	
19	FE46050000A	Cam,One Way Clutch	1	
20	FE39200000A	SPRING,MID PTO(INNER)	1	
21	22242-000200	SNAP RING, SHAFT (Φ 20)	1	
22	FE39220000A	SPRING,MID PTO(OUTER)	1	
23	FE39230000A	CASE,ONE WAY	1	
24	24341-000530	O-RING, FIX (Φ53)	1	
25	26013-080302	HEX BOLT W/WASHER	4	
26	FE39260000A	Disk, Clutch Friction	3	
27	FE39270000A	PLATE,FRICTION	1	
28	FE39280000A	Disk, Clutch Saperation	3	
29	26013-100352	Bolt, Hexa (10-35)	4	
30	FE39300000C	SHAFT, IDLE	1	
31	22351-060016	PIN, SPRING (6-16)	1	
32	FE39320000A	GEAR 19T,MID PTO	1	
33	CTC1040000A4	Bearing #6003	2	
34	FE39340000A	COLLAR,THRUST	1	
35	FE39350000A	PACKING,MID PTO CASE	1	

FIG 037A-1 Branson 2400	REAR DIFFERENTIAL _2400(h)	Year/Month 2020/01

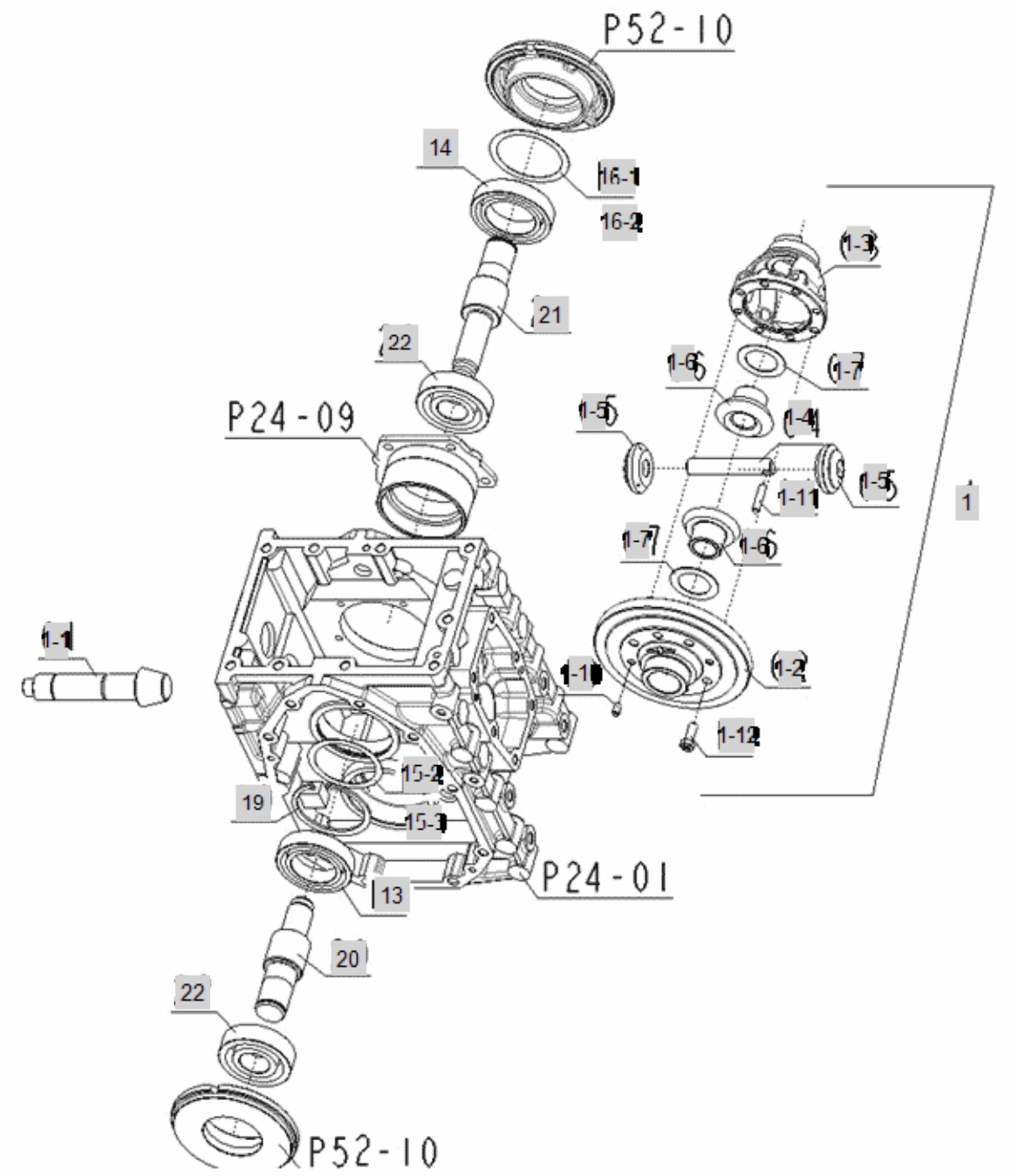

FIG 037A-1 Branson 2400	REAR DIFFERENTIAL _2400(h)	Year/Month 2020/01

KeyNo.	Part Number	Part Name	Quantity	Other
1	FE41010000A	GEAR SUB ASS'Y, BEVEL	1	
1-1	FE41020100A	DRIVE PINION	1	
1-2	FE41020200A	RING GEAR	1	
1-3	FE41030000A	CASE,DIFFRENTIAL -> FE41010000A	1	
1-4	FE41040000B	SHAFT, DIFF. PINION	1	
1-5	FE41050000B	PINION, DIFF.	2	
1-6	FE41060000B	GEAR, DIFF. SIDE	2	
1-7	FE41070000A	SHIM1.0	2	
1-10	FE41100000A	PIN	1	
1-11	FE41110000A	PIN	1	
1-12	TC57080000A4	BOLT M8X22	6	
13	TA00000749A	BALL BEARING	1	
14	TA00000750A	BALL BEARING	1	
15-2	FE41160000A	SHIM, DIFF. SIDE	1	
15-3	TA00018029A	SHIM 0.1T	1	
16-1	FE41170000A	SHIM	1	
16-2	FE41180000A	SHIM, DIFF. SIDE	1	
19	22252-000750	RING, CIRCLIP (Φ 75)	1	
20	FE41200000A	SHAFT(L),DEFFENTIAL GEAR	1	
21	FE41210000A	SHAFT(R),DIFFERENTIAL GEAR	1	
22	TA00000760A	BALL BEARING	2	

FIG 037A-2 Branson 2400	REAR DIFFERENTIAL _2400(h),2019~	Year/Month 2020/01

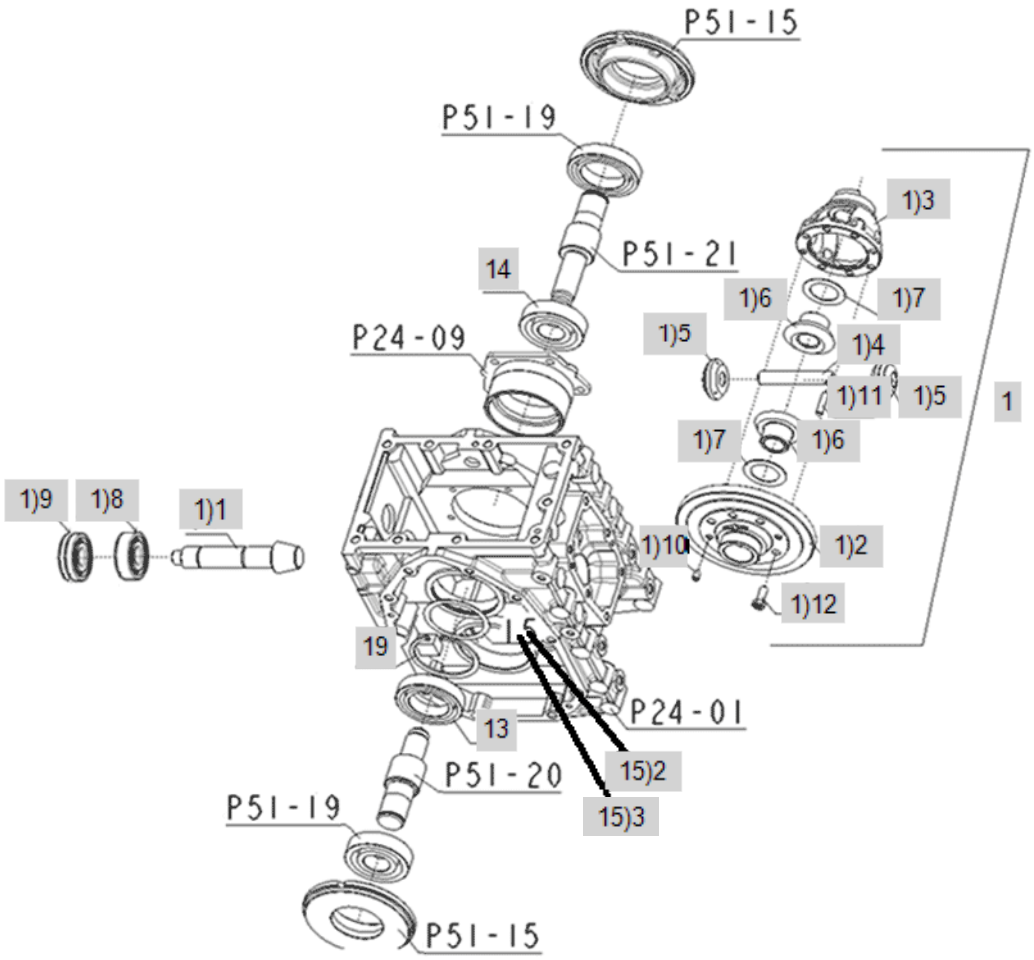

FIG 037A-2 Branson 2400	REAR DIFFERENTIAL _2400(h),2019~	Year/Month 2020/01

KeyNo.	Part Number	Part Name	Quantity	Other
1	FE41010000A	GEAR SUB ASS'Y, BEVEL	1	
1)1	FE41020100A	DRIVE PINION	1	
1)2	FE41020200A	RING GEAR	1	
1)3	FE41030000A	CASE,DIFFRENTIAL -> FE41010000A	1	
1)4	FE41040000B	SHAFT, DIFF. PINION	1	
1)5	FE41050000B	PINION, DIFF.	2	
1)6	FE41060000B	GEAR, DIFF. SIDE	2	
1)7	FE41070000A	SHIM1.0	2	
1)8	24101-063054	BALL BEARING #6305	1	
1)9	24121-063054	BALLBEARING	1	
1)10	FE41100000A	PIN	1	
1)11	FE41110000A	PIN	1	
1)12	TC57080000A4	BOLT M8X22	6	
13	TA00000749A	BALL BEARING	1	
14	TA00000750A	BALL BEARING	1	
15)2	FE41160000A	SHIM, DIFF. SIDE	1	
15)3	TA00018029A	SHIM 0.1T	1	
19	22252-000750	RING, CIRCLIP (Φ 75)	1	

FIG 038A Branson 2400	FRONT WHEEL PROPELLER SHAFT	Year/Month 2020/01

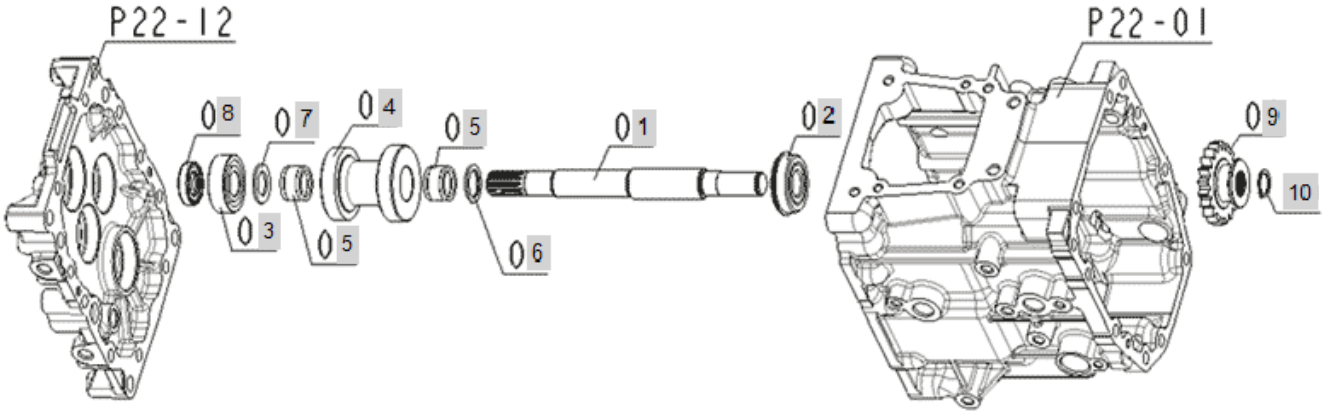

FIG 038A Branson 2400	FRONT WHEEL PROPELLER SHAFT	Year/Month 2020/01

KeyNo.	Part Number	Part Name	Quantity	Other
1	FE42010000B	SHAFT, 4WD	1	
2	24121-062044	BEARING	1	
3	24101-062044	Bearing, Ball (#6204)	1	
4	FE42040000C	GEAR, REVERSE	1	
5	24161-222817	NEEDLE BEARING	2	
6	FE42060000B	COLLAR	1	
7	FE42070000A	COLLAR	1	
8	FE42080000A	SEAL,OIL	1	
9	FE42090000A	GEAR,4WD(20)	1	
10	22242-000190	SNAP RING, SHAFT (Φ 19)	1	

FIG 040A Branson 2400	2ND SHAFT _2400	Year/Month 2020/01

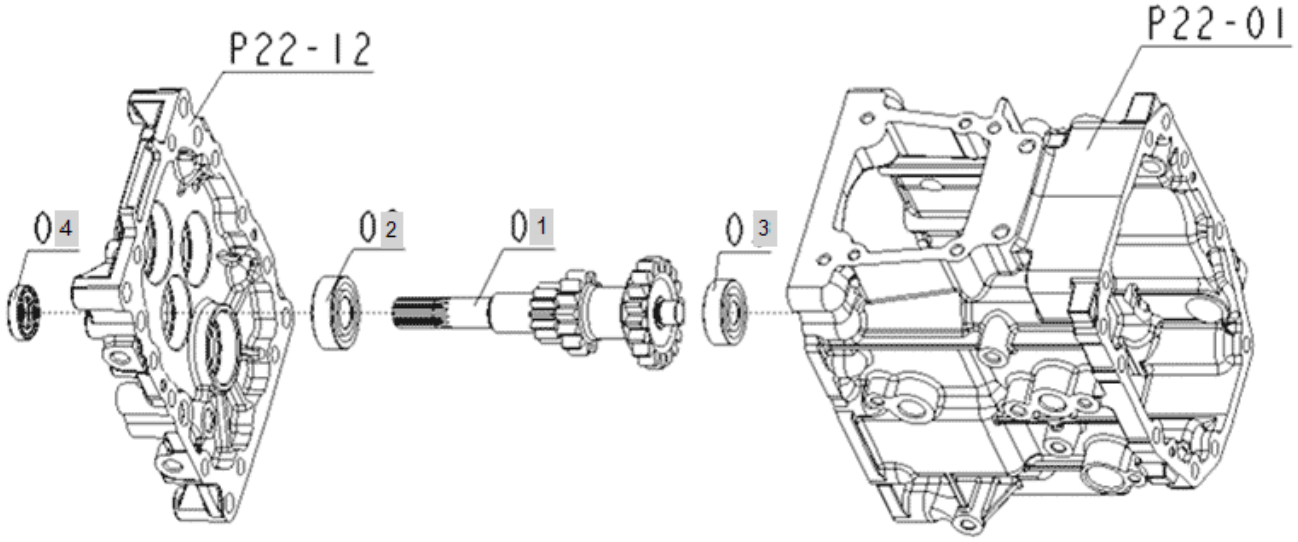

FIG 040A Branson 2400	2ND SHAFT _2400	Year/Month 2020/01

KeyNo.	Part Number	Part Name	Quantity	Other
1	FE44010000A	GEAR(13-13-18)	1	
2	24101-062044	Bearing, Ball (#6204)	1	
3	24101-063024	Bearing, Ball (#6302)	1	
4	FE42080000A	SEAL,OIL	1	

FIG 042A Branson 2400	3RD.SHAFT	Year/Month 2020/01

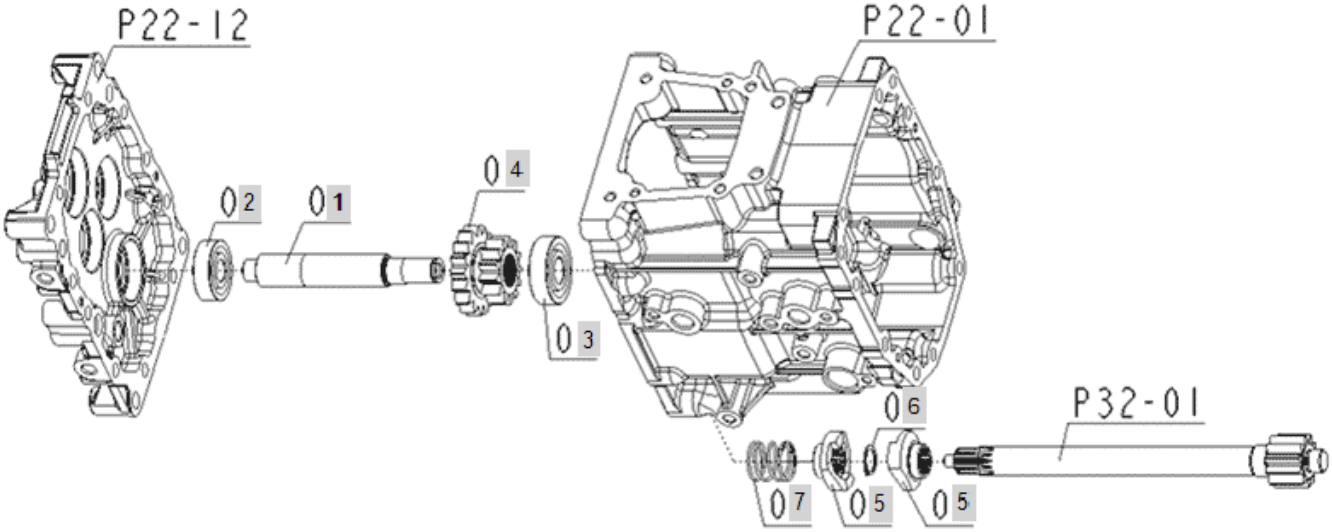

FIG 042A Branson 2400	3RD.SHAFT	Year/Month 2020/01

KeyNo.	Part Number	Part Name	Quantity	Other
1	FE46010000A	SHAFT	1	
2	24101-063034	BALL BEARING #6303	1	
3	24101-063044	BALL BEARING	1	
4	FE46040000B	GEAR(17-13)	1	
5	FE46050000A	Cam,One Way Clutch	2	
6	22242-000190	SNAP RING, SHAFT (Φ 19)	1	
7	FE46070000A	SPRING, ONE WAY CLUTCH	1	

FIG 044A Branson 2400	4TH. SHAFT	Year/Month 2020/01

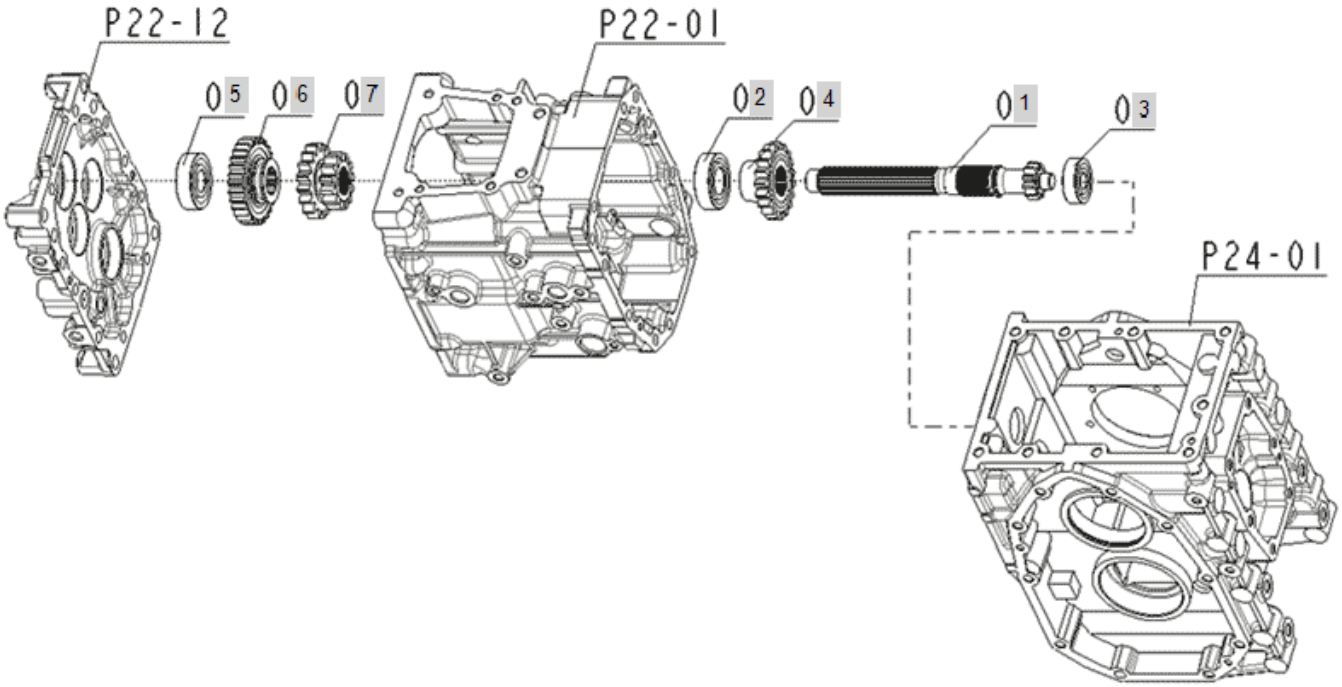

FIG 044A Branson 2400	4TH. SHAFT	Year/Month 2020/01

KeyNo.	Part Number	Part Name	Quantity	Other
1	FE48010000A	Shaft, 4 Stage	1	
2	24101-062054	Bearing, Ball (#6205)	1	
3	TT72040000A4	BEARING	1	
4	TA00031466A	GEAR(22T)	1	
5	24101-063044	BALL BEARING	1	
6	FE48060000B	Gear, 4th Shaft 30T	1	
7	FE48070000A	Gear, 4th Shaft 17T-13T	1	

FIG 046A Branson 2400	MAIN GEAR SHIFT FORK	Year/Month 2020/01

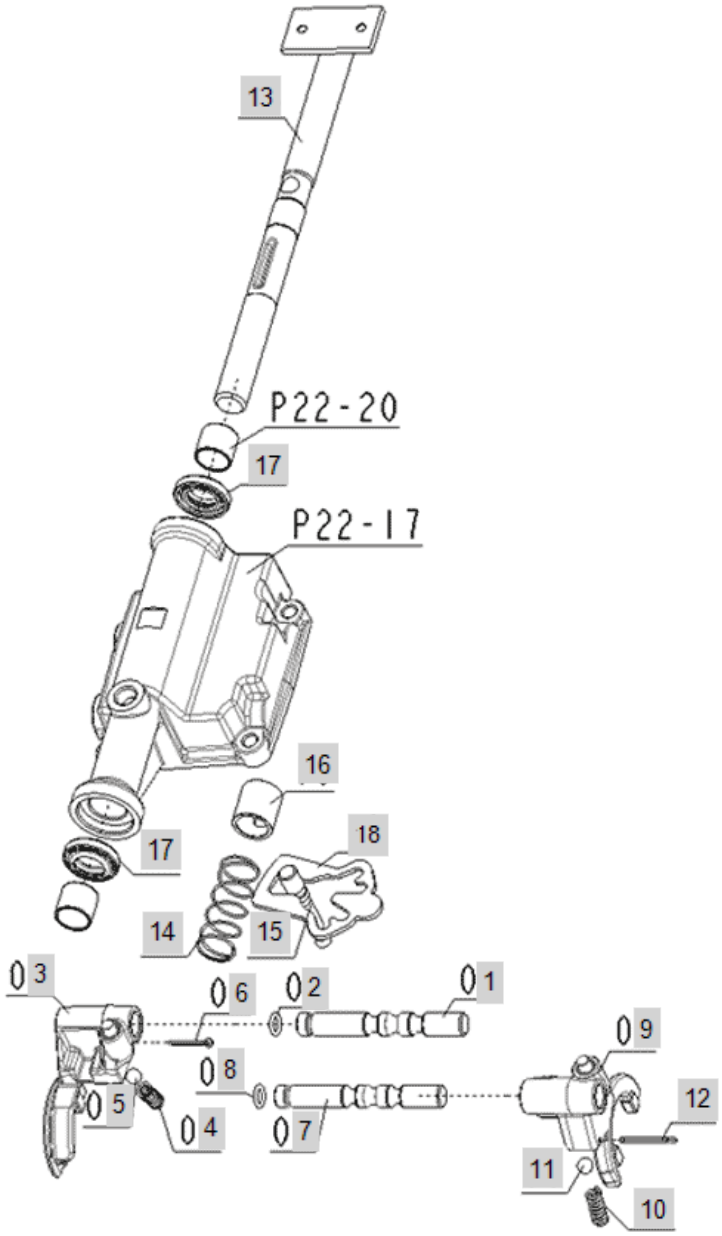

FIG 046A Branson 2400	MAIN GEAR SHIFT FORK	Year/Month 2020/01

KeyNo.	Part Number	Part Name	Quantity	Other
1	FE50010000A	Rod, Main Gear Shift Fork	1	
2	24311-240100	SEAL, O-RING	1	
3	FE50030000B	FORK, BACK SHIFT	1	
4	FE50040000A	SPRING	1	
5	24190-120001	STEELBALL	1	
6	22417-300220	PIN , COTTER (3-22)	1	
7	FE50010000A	Rod, Main Gear Shift Fork	1	
8	24311-240100	SEAL, O-RING	1	
9	FE50090000B	FORK, MAIN SHIFT	1	
10	FE50040000A	SPRING	1	
11	24190-120001	STEELBALL	1	
12	22417-300300	PIN , COTTER (3-30)	1	
13	FE50130000A	SHAFT	1	
14	FE50140000A	SPRING,RETURN	1	
15	FE50150000A	ARM,MAIN SHIFT	1	
16	FE50160000A	COLLAR	1	
17	FE50170000A	SEAL,OIL	2	
18	FE50180000A	PLATE,SHIFT GUIDE	1	

FIG 047A Branson 2400	RANGE GEAR SHIFT FORK _2400(H)	Year/Month 2020/01

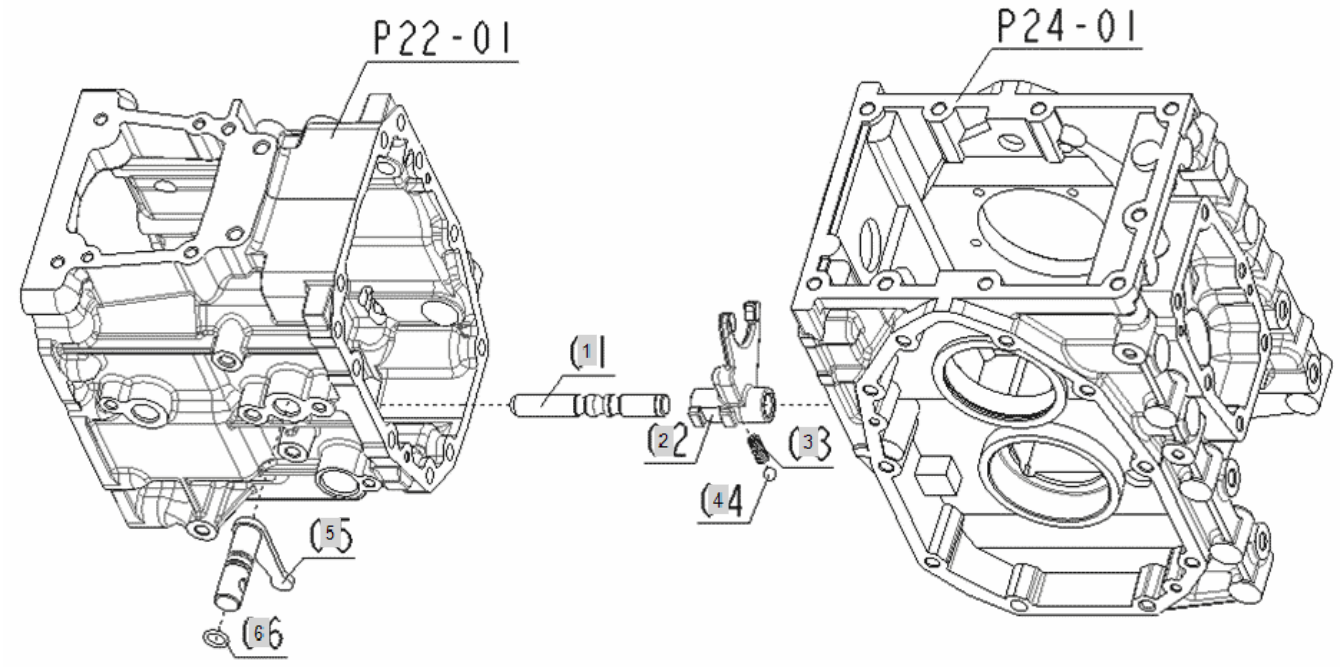

FIG 047A Branson 2400	RANGE GEAR SHIFT FORK _2400(H)	Year/Month 2020/01

KeyNo.	Part Number	Part Name	Quantity	Other
1	FE51010000A	Rod, Main Gear Shift Fork	1	
2	FE51020000B	FORK, Range Gear Shift	1	
3	FE51030000B	SPRING	1	
4	24190-100001	Ball, Steel (5/16)	1	
5	FE51050000B	ARM, RANGE SHIFT	1	
6	24311-000125	O-RING, DYNAMIC (Φ12.5)	1	

FIG 048A Branson 2400	PTO GEAR SHIFT FORK	Year/Month 2020/01

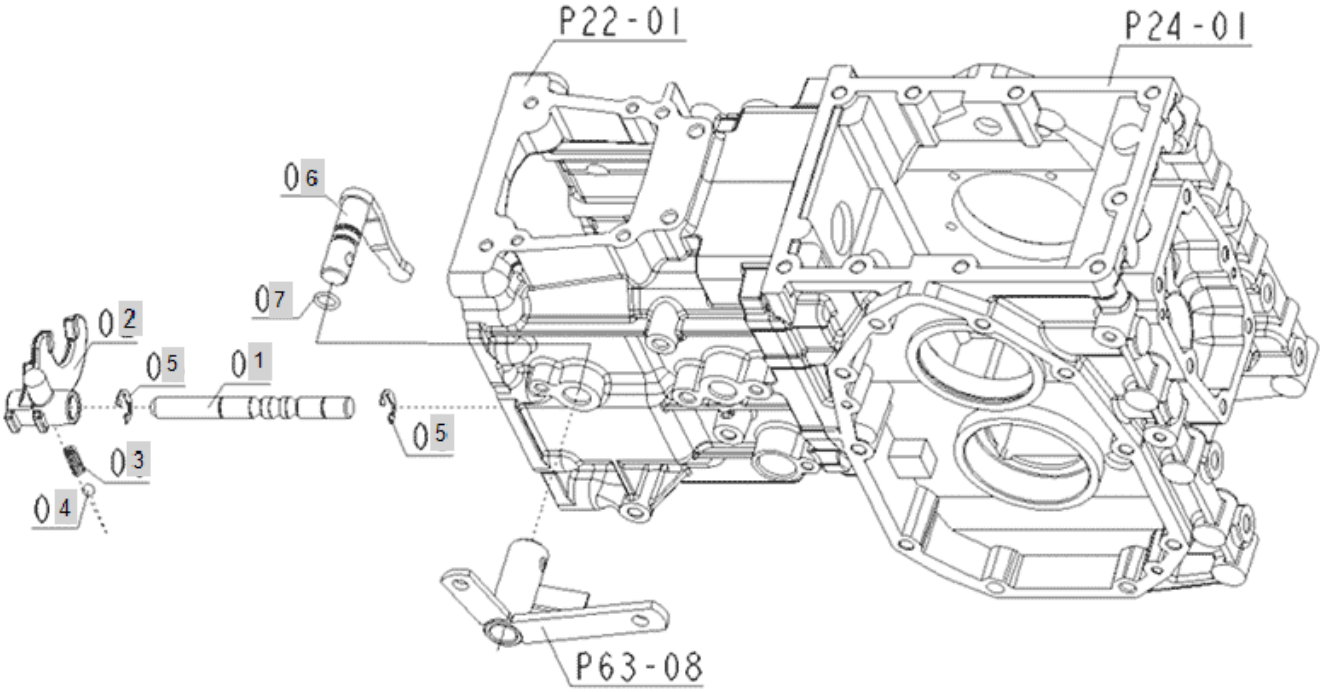

FIG 048A Branson 2400	PTO GEAR SHIFT FORK	Year/Month 2020/01

KeyNo.	Part Number	Part Name	Quantity	Other
1	FE53010000A	ROD,FORK	1	
2	FE53020000A	FORK,PTO SHIFT	1	
3	FE51030000B	SPRING	1	
4	24190-100001	Ball, Steel (5/16)	1	
5	22272-000120	RING, CIRCLIP (Φ 12)	2	
6	FE53060000A	ARM,PTO SHIFT	1	
7	24311-000125	O-RING, DYNAMIC (Φ12.5)	1	

FIG 050 Branson 2400	DIFFERENTIAL LOCK SHIFT FORK	Year/Month 2020/01

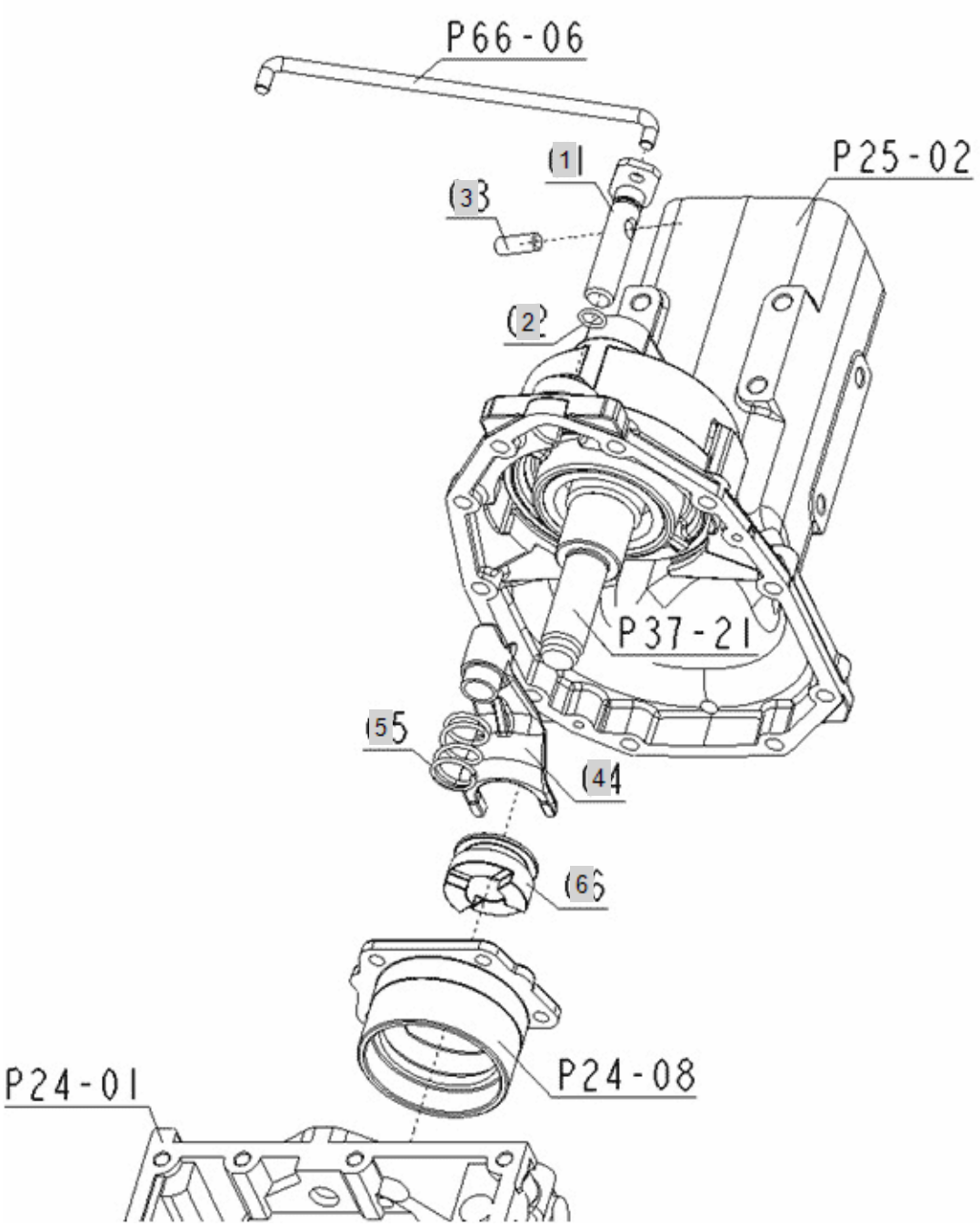

FIG 050 Branson 2400	DIFFERENTIAL LOCK SHIFT FORK	Year/Month 2020/01

KeyNo.	Part Number	Part Name	Quantity	Other
1	FE55010000B	ROD, FORK	1	
2	24311-000125	O-RING, DYNAMIC (Φ12.5)	1	
3	22312-100250	PIN, DOWEL (10-25)	1	
4	FE55040000B	FORK, DIFF. LOCK SHIFT	1	
5	FE55050000A	Spring, Differntial Lock Shift Fork	1	
6	FE55060000A	Clutch, Differntial Lock Shift	1	

FIG 051-1 Branson 2400	REAR AXLE	Year/Month 2020/01

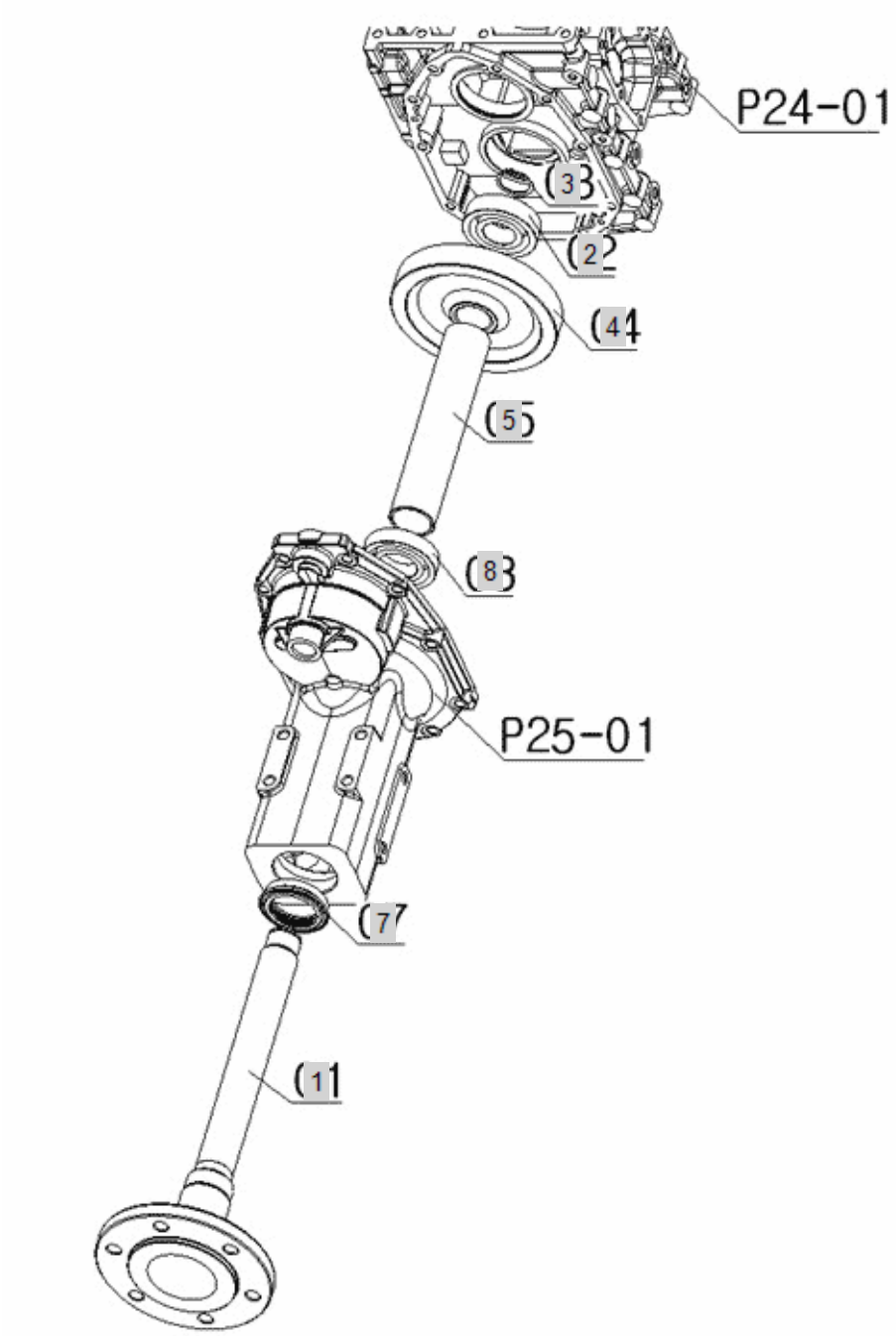

FIG 051-1 Branson 2400	REAR AXLE	Year/Month 2020/01

KeyNo.	Part Number	Part Name	Quantity	Other
1	FE56010000A	AXLE, REAR	2	
2	TA00000761A	BALL BEARING	2	
3	22242-000350	SNAP RING, SHAFT (Φ 35)	2	
4	FE56040000A	GEAR(57)	2	
5	FE56050000A	COLLAR 152	2	
7	FE56070000A	SEAL,OIL	2	
8	TA00000755A	BALL BEARING	2	

FIG 051-2 Branson 2400	51. REAR AXLE ASSY	Year/Month 2020/01

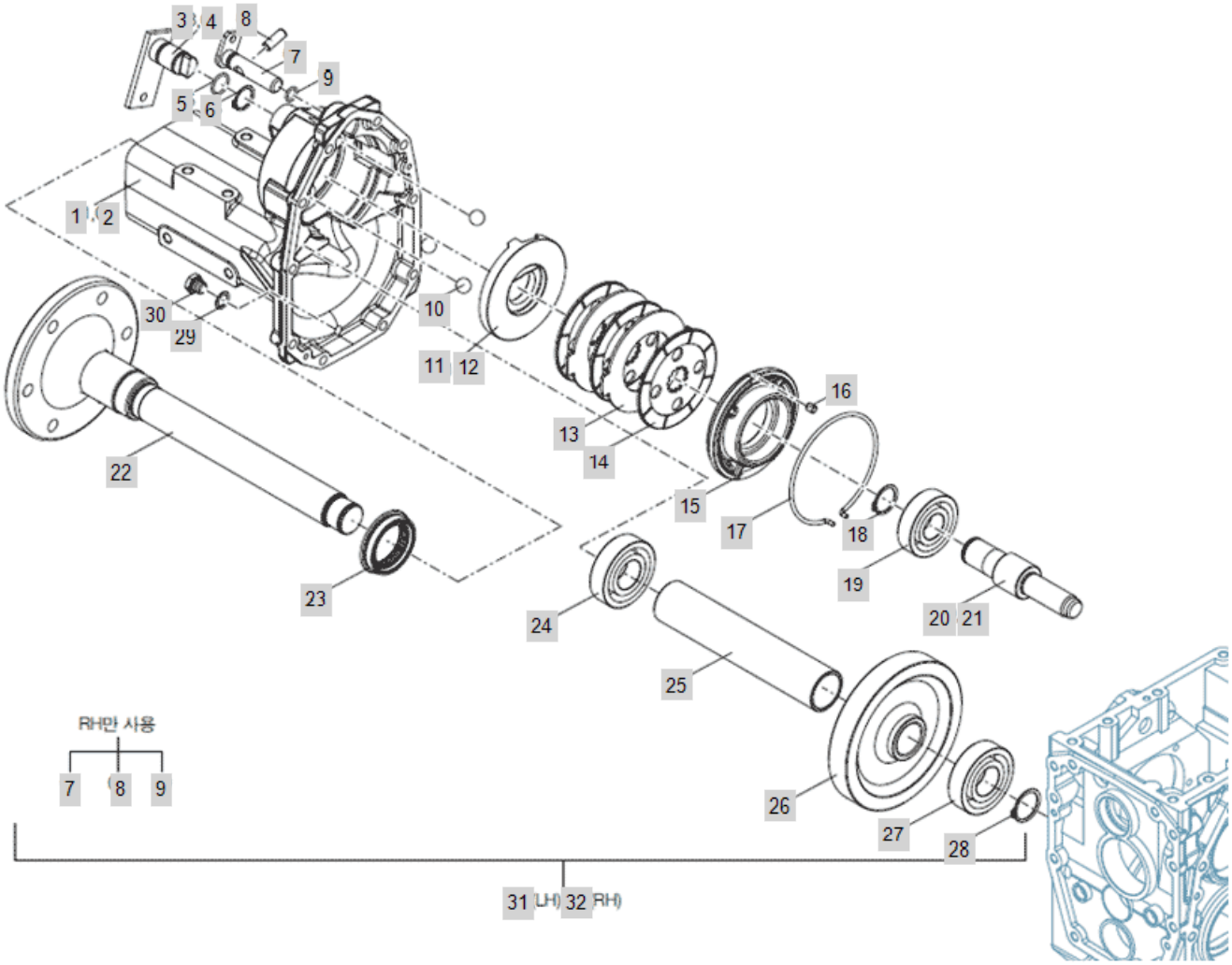

FIG 051-2 Branson 2400	51. REAR AXLE ASSY	Year/Month 2020/01

KeyNo.	Part Number	Part Name	Quantity	Other
1	FE30010000A	CASE, AXLE LH	1	
2	FE30020000A	CASE, AXLE RH	1	
3	FE57010000A	LEVER(L),BRAKE CAM	1	
4	FE57020000A	LEVER(R),BRAKE CAM	1	
5	24311-000210	O-RING, DYNAMIC (Φ21)	2	
6	22242-000250	SNAP RING, SHAFT (Φ 25)	2	
7	FE55010000B	ROD, FORK	1	
8	22312-100250	PIN, DOWEL (10-25)	1	
9	24311-000125	O-RING, DYNAMIC (Φ12.5)	1	
10	24190-200001	Ball, Steel	6	
11	FE57060000A	ACTUATOR(L)	1	
12	FE57070000A	ACTUATOR...	1	
13	FE57080000A	Plate, Brake Friction	6	
14	FE57090000A	Plate, Brake Iron	4	
15	FE57100000A	HOLDER,BEARING	2	
16	FE57110000A	PIN	2	
17	FE57120000A	CLIP	2	
18	22242-000300	SNAP RING, SHAFT (Φ 30)	2	
19	24101-063064	Bearing, Ball (#6306)	2	
20	FE41200000A	SHAFT(L),DEFFENTIAL GEAR	1	
21	FE41210000A	SHAFT(R),DIFFERENTIAL GEAR	1	
22	FE56010000B	AXLE, REAR	2	
23	FE56070000A	SEAL,OIL	2	
24	24101-063074	Bearing, Ball (#6307)	2	
25	FE56050000A	COLLAR 152	2	
26	FE56040000A	GEAR(57)	2	
27	24101-062084	Bearing, Ball (#6208)	2	
28	22242-000350	SNAP RING, SHAFT (Φ 35)	2	
29	23414-120000	WASHER, PLAIN (Φ 12)	2	
30	23887-120002	BOLT	2	
31	TA00056813A	ASS'Y, REAR SHAFT	1	
32	TA00056814A	ASS'Y, REAR SHAFT	1	

FIG 052. Branson 2400	BRAKE	Year/Month 2020/01

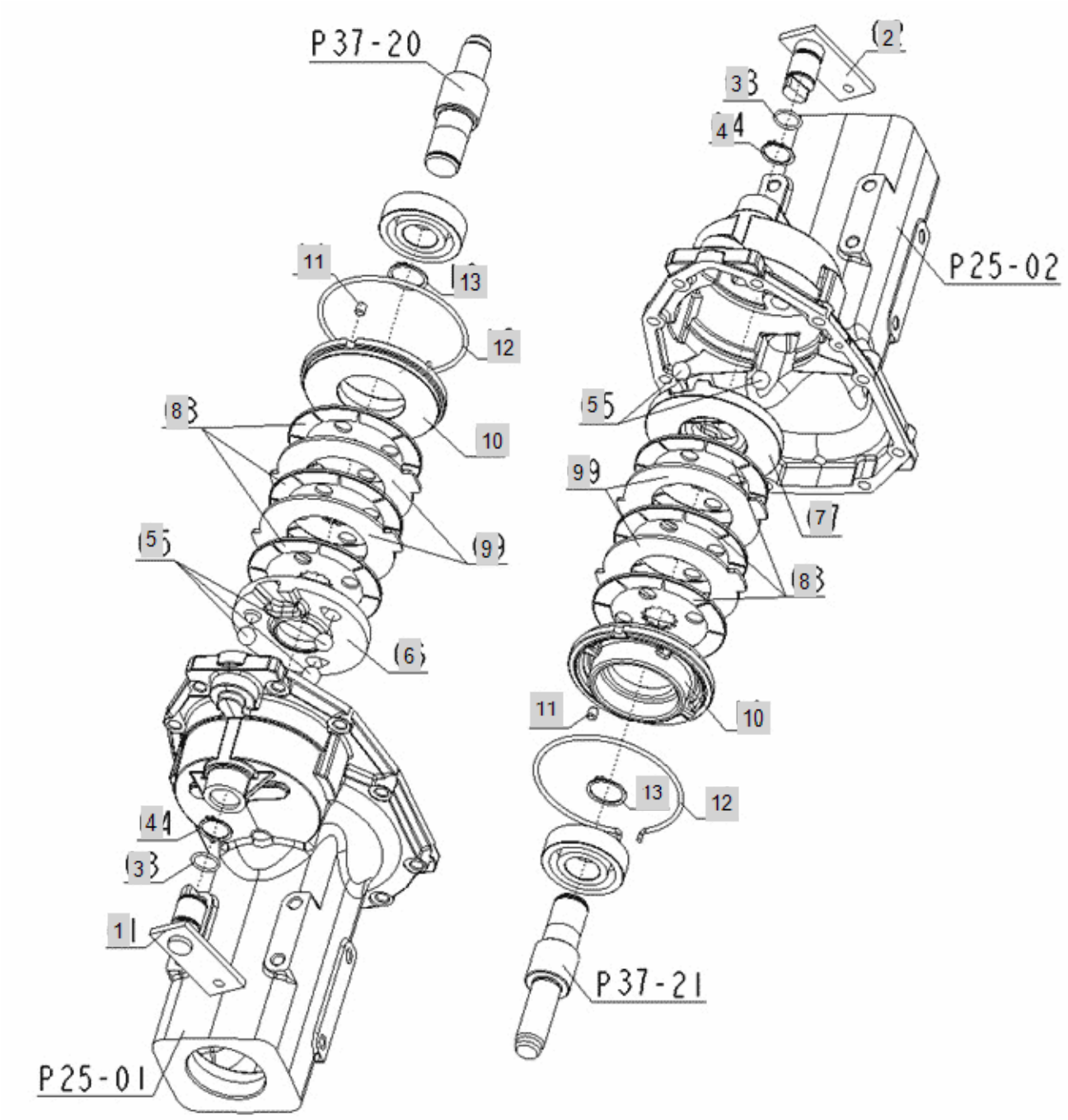

FIG 052. Branson 2400	BRAKE	Year/Month 2020/01

KeyNo.	Part Number	Part Name	Quantity	Other
1	FE57010000A	LEVER(L),BRAKE CAM	1	delete
2	FE57020000A	LEVER(R),BRAKE CAM	1	delete
3	24311-000210	O-RING, DYNAMIC (Φ21)	2	delete
4	22242-000250	SNAP RING, SHAFT (Φ 25)	2	delete
5	24190-200001	Ball, Steel	6	delete
6	FE57060000A	ACTUATOR(L)	1	delete
7	FE57070000A	ACTUATOR...	1	delete
8	FE57080000A	Plate, Brake Friction	6	delete
9	FE57090000A	Plate, Brake Iron	4	delete
10	FE57100000A	HOLDER,BEARING	2	delete
11	FE57110000A	PIN	2	delete
12	FE57120000A	CLIP	2	delete
13	22242-000300	SNAP RING, SHAFT (Φ 30)	2	delete

FIG 053. Branson 2400	BRAKE ROD	Year/Month 2020/01

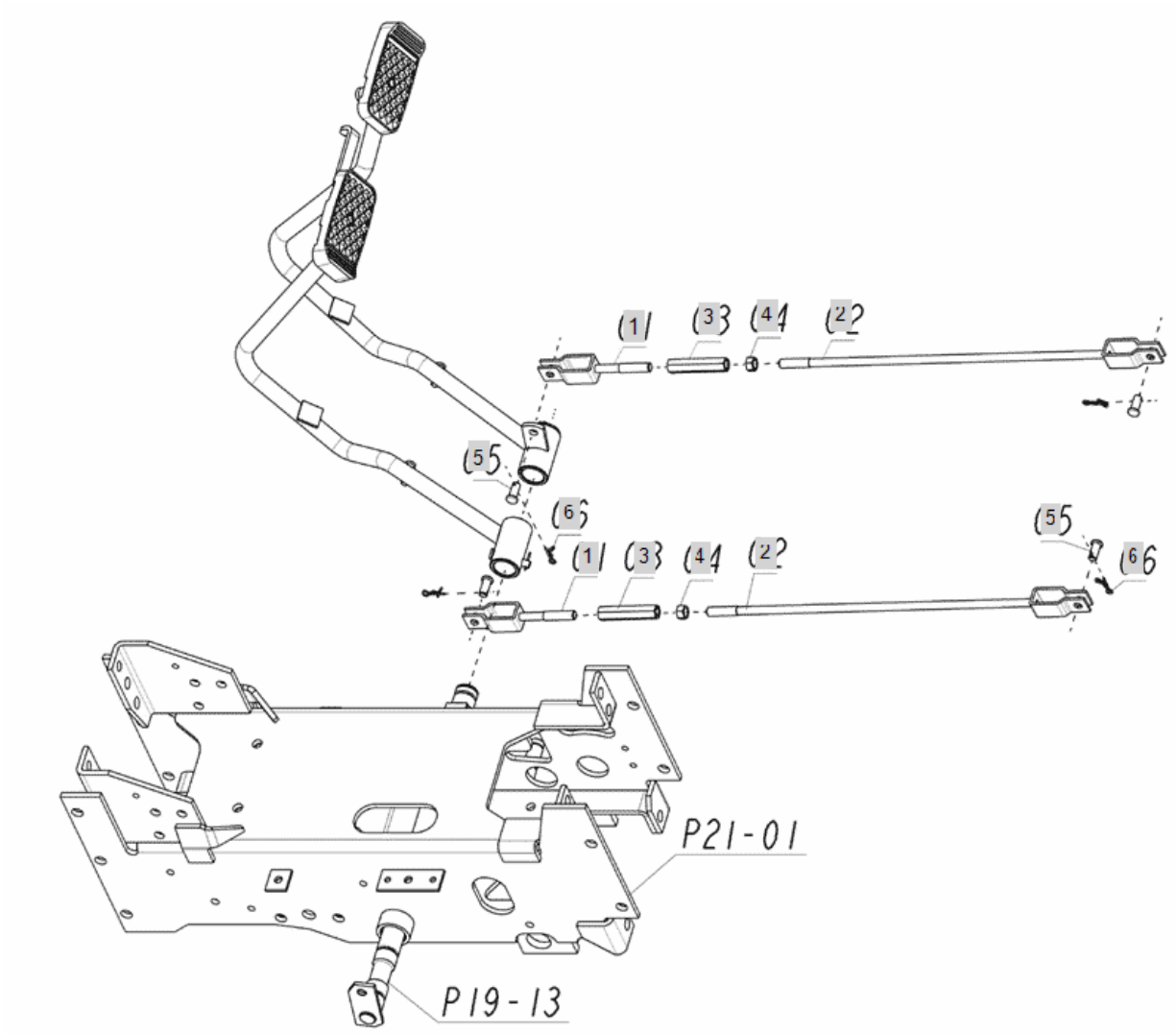

FIG 053. Branson 2400	BRAKE ROD	Year/Month 2020/01

KeyNo.	Part Number	Part Name	Quantity	Other
1	FE59010000A	BRAKE ROD, FRONT	2	
2	FE59020000B	BRAKE ROD, REAR	2	
3	TC73080300A4	TURN BUCKLE, 10X70	2	
4	26716-100002	Nut, Hexa (Φ10)	2	
5	TT83010000A4	TURN BUCKLE, 10X70	4	
6	RR64050000A4	Pin, Come-Off Snap (Φ8)	4	

FIG 054-1 Branson 2400	BRAKE PEDAL	Year/Month 2020/01

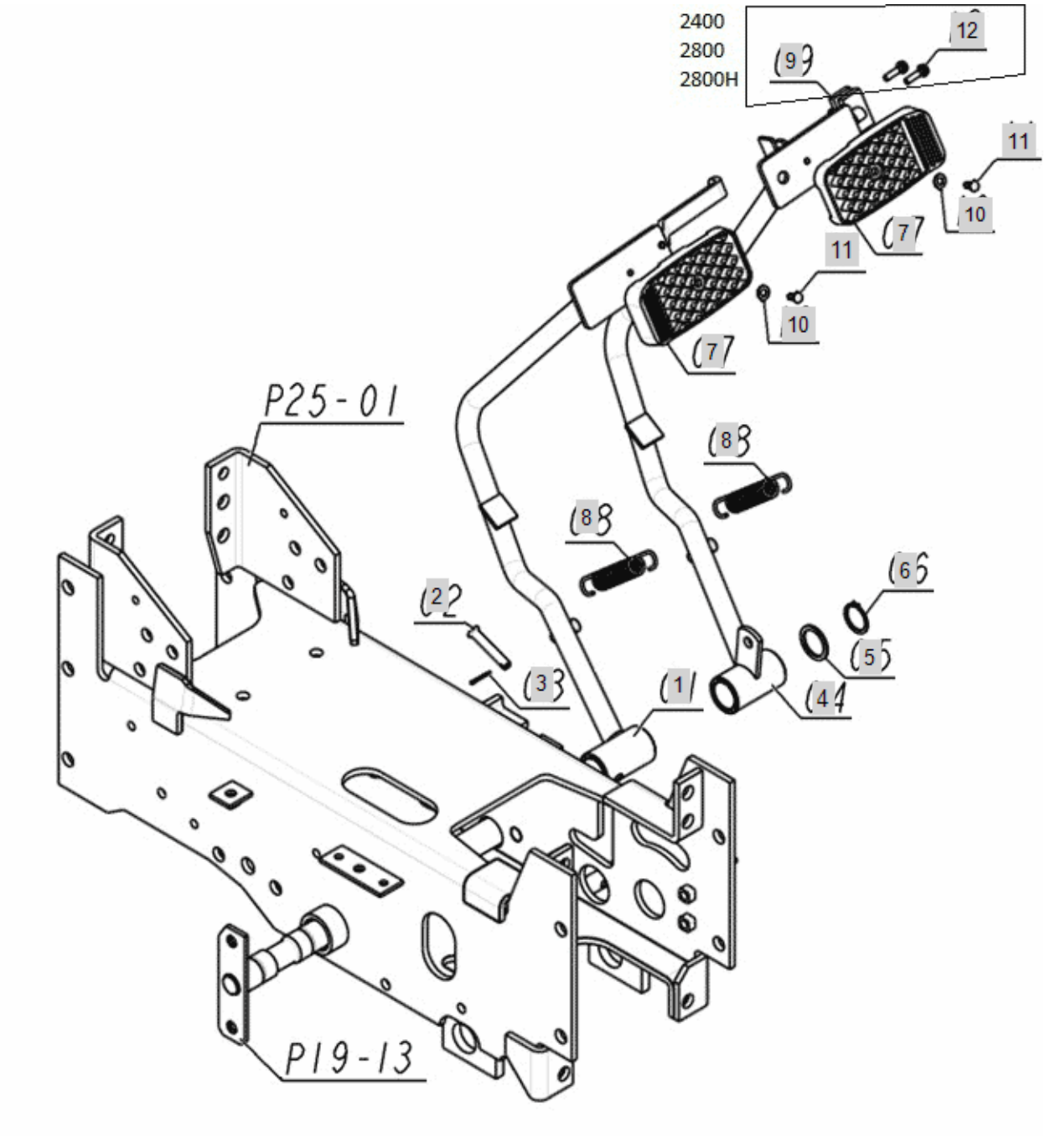

FIG 054-1 Branson 2400	BRAKE PEDAL	Year/Month 2020/01

KeyNo.	Part Number	Part Name	Quantity	Other
1	FE71010000E		1	
2	22487-080400	PIN 8X40	1	
3	22417-200180	PIN , COTTER (2-18)	1	
4	FE71040000E		1	
5	FE71050000A	COLLER	1	
6	22242-000240	SNAP RING, SHAFT (Φ 24)	1	
7	TC73050000A3	PEDALHEADCOVER	2	
8	FE23040000A	SPRING, BRAKE RETURN	2	
9	HA00000355A	BARK SWITCH	1	
10	TC73040000A4	WASHER(REVET)	2	
11	TC73030000A	SUB TO-> TC73030000A4	2	
12	26023-050202	Screw, (5-20)	2	

FIG 054-2 Branson 2400	BRAKE PEDAL(2018.06~)	Year/Month 2020/01

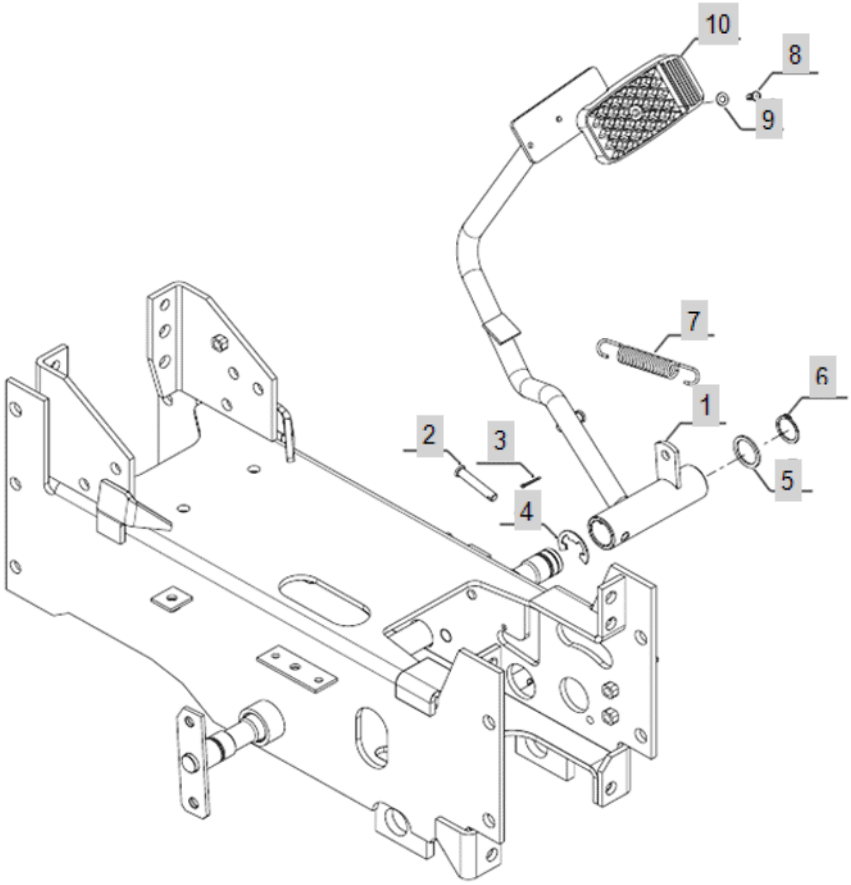

FIG 054-2 Branson 2400	BRAKE PEDAL(2018.06~)	Year/Month 2020/01

KeyNo.	Part Number	Part Name	Quantity	Other
1	TA00051616B	PEDAL, BRAKE	1	
2	22487-080400	PIN 8X40	1	
3	22417-200180	PIN , COTTER (2-18)	1	
4	22272-000190	RING, CIRCLIP (Φ 19)	1	
5	FE71050000A	COLLER	1	
6	22242-000240	SNAP RING, SHAFT (Φ 24)	1	
7	FE23040000A	SPRING, BRAKE RETURN	2	
8	TC73030000A	SUB TO-> TC73030000A4	2	
9	TC73040000A4	WASHER(REVET)	2	
10	TC73050000A3	PEDALHEADCOVER	2	

FIG 055. Branson 2400	BRAKE SWITCH	Year/Month 2020/01

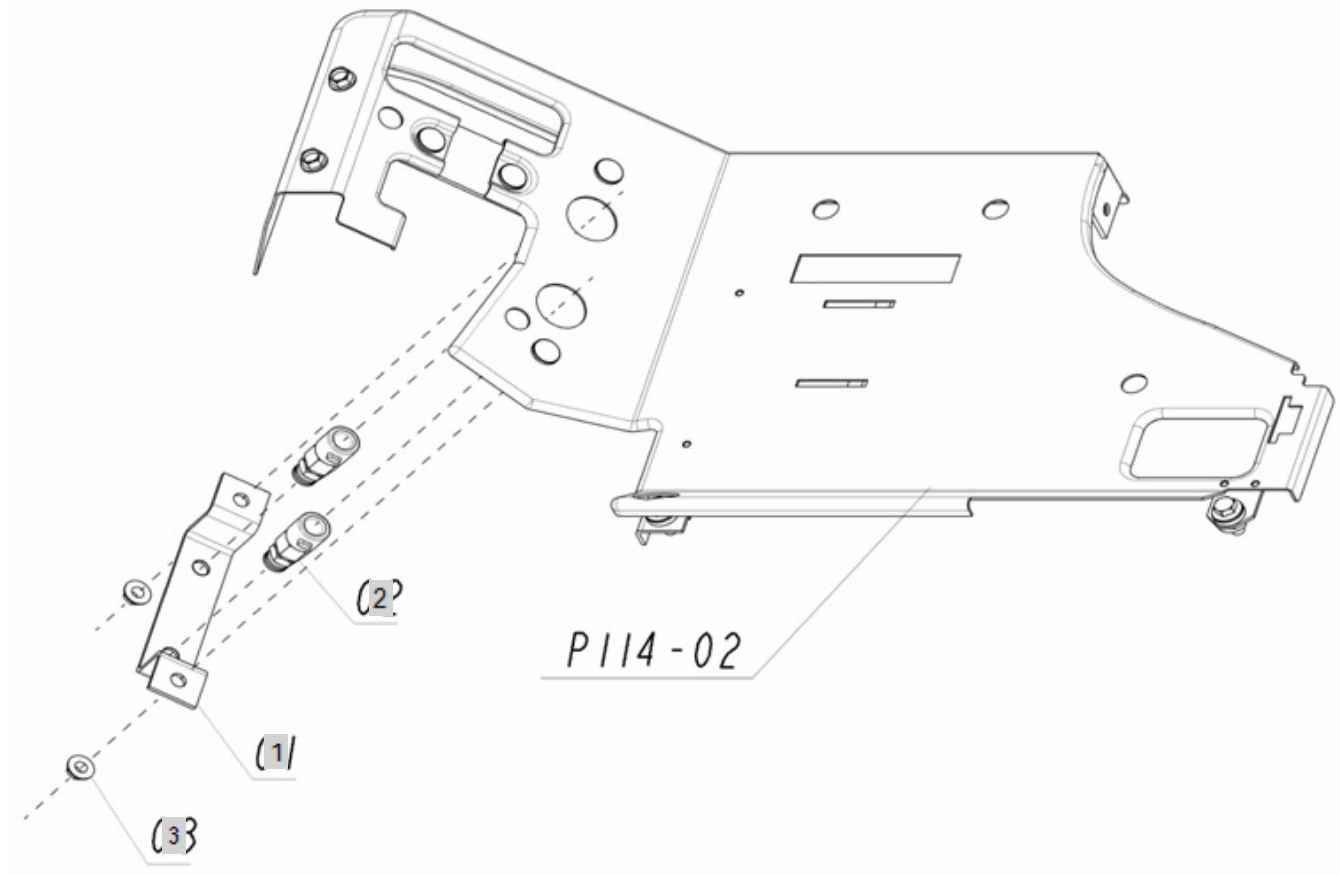

FIG 055. Branson 2400	BRAKE SWITCH	Year/Month 2020/01

KeyNo.	Part Number	Part Name	Quantity	Other
1	TA00016905B	BRAKET SWITCH	1	
2	TZC5110000A3	STOPLAMPSWITCH	2	
3	26366-080002	Nut, Hexa (Φ8)	2	

FIG 056A Branson 2400	SIDE BRAKE _2400(h)	Year/Month 2020/01

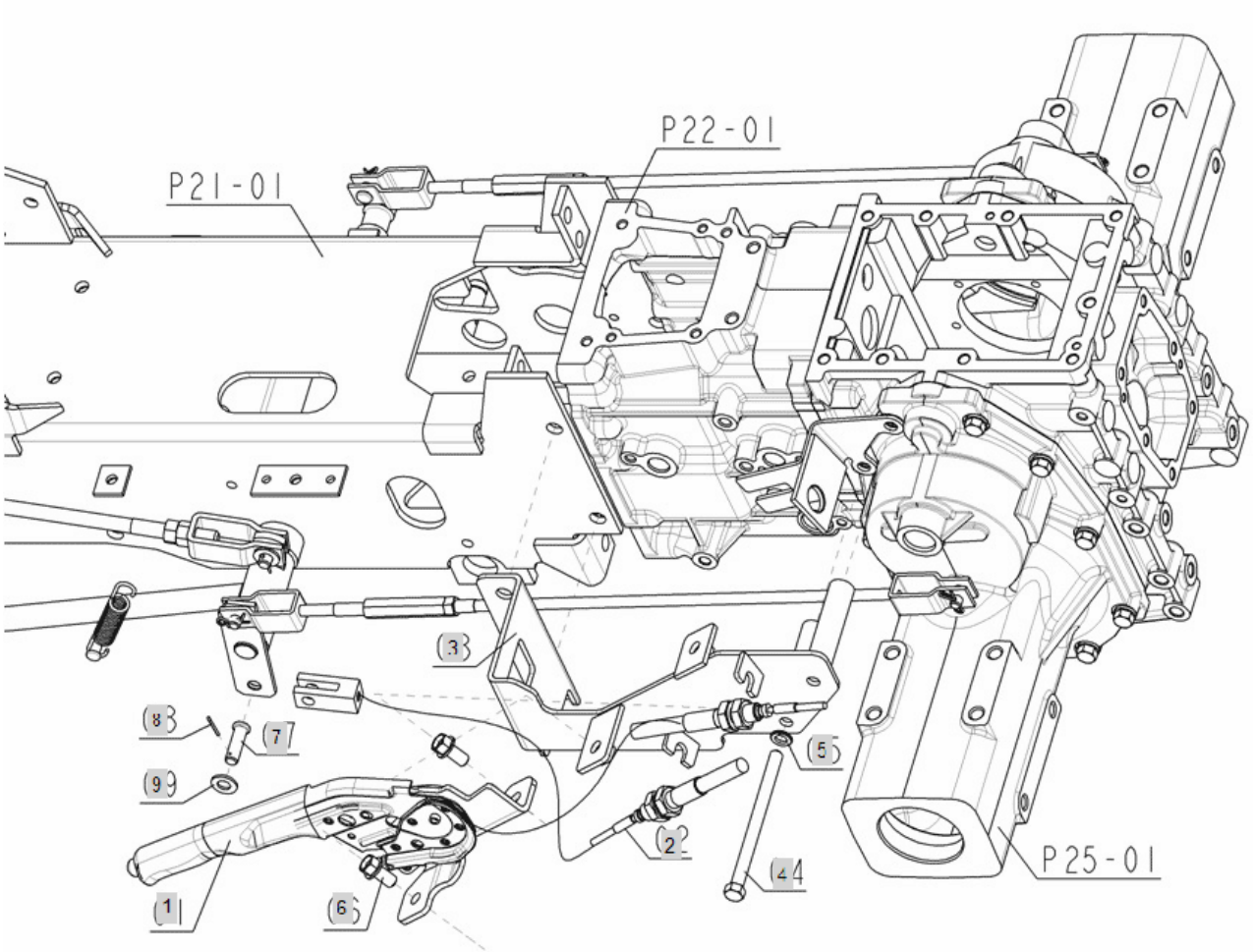

FIG 056A Branson 2400	SIDE BRAKE _2400(h)	Year/Month 2020/01

KeyNo.	Part Number	Part Name	Quantity	Other
1	TA00001403A	PARKING BRAKE	1	
2	TA00017080A	PARKING BRAKE WIRE	1	
3	TA00016435C	PARKING BRAKE BRAKET ASSY	1	
4	26116-101352	BOLT	2	
5	22217-100000	WASHER, SPRING (Φ 10)	2	
6	26106-100202	HEX BOLT, (10-20)	2	
7	22486-100280	PIN, FLAT HEAD	1	
8	22417-200160	PIN , COTTER (2-16)	1	
9	22127-100000	WASHER, PLAIN (Φ 10)	1	

FIG 057A-1 Branson 2400	MAIN GEAR SHIFT LEVER	Year/Month 2020/01

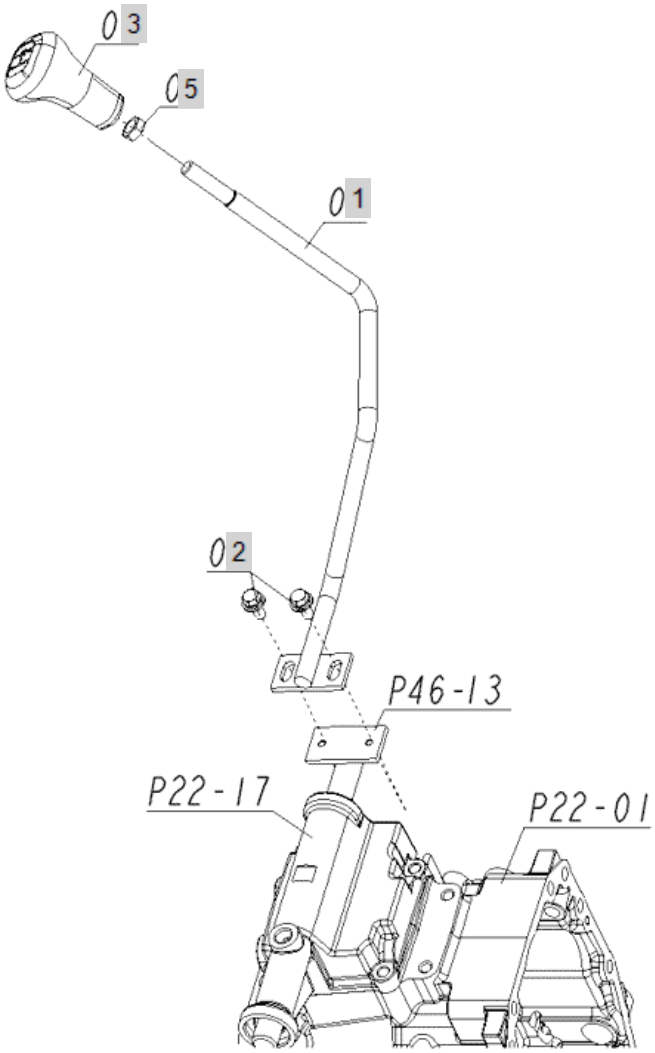

FIG 057A-1 Branson 2400	MAIN GEAR SHIFT LEVER	Year/Month 2020/01

KeyNo.	Part Number	Part Name	Quantity	Other
1	FE64010000B	LEVER, MAIN GEAR SHIFT	1	
2	26014-080202	Bolt, Hexa (8-20)	2	
3	FE64030000A	KNOB, MAIN SHIFT (00 SERIES)	1	
5	26756-120002	LOCKNUTM12PLATED	1	

FIG 061A-1 Branson 2400	RANGE GEAR SHIFT LEVER _2400(h)	Year/Month 2020/01

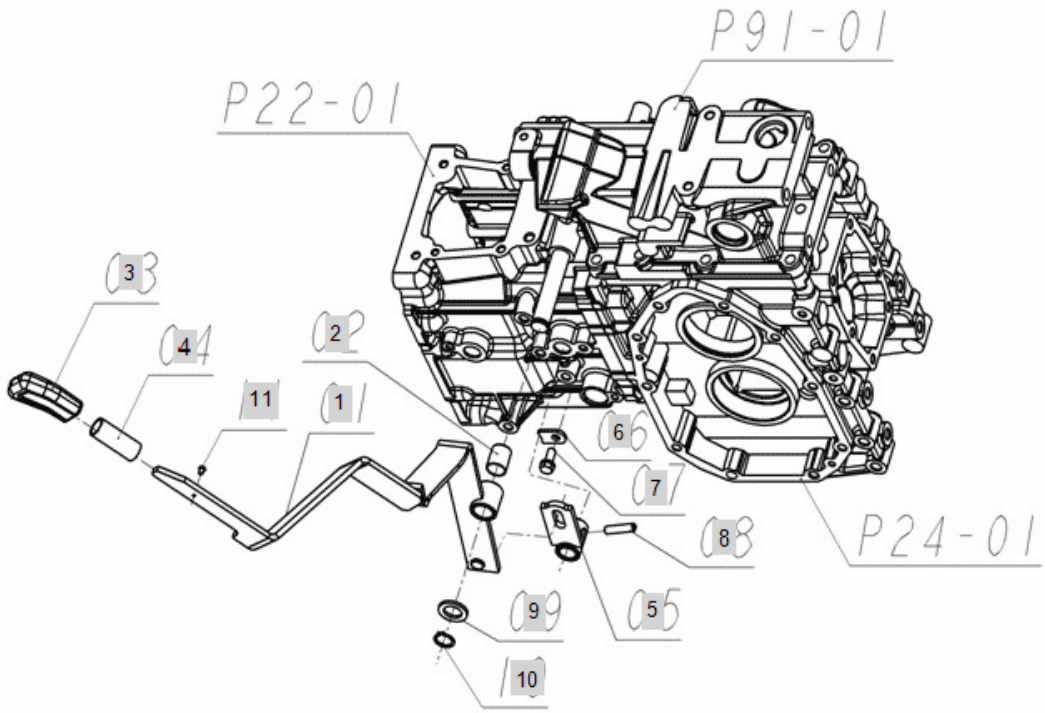

FIG 061A-1 Branson 2400	RANGE GEAR SHIFT LEVER _2400(h)	Year/Month 2020/01

KeyNo.	Part Number	Part Name	Quantity	Other
1	FE67010000D	LEVER, RANGE SHIFT	1	
2	24550-018250	DRYBUSH	1	
3	TA00017708A	KNOB(RED)	1	
4	TA00016636A	LEVER HOSE 16X60	1	
5	FE67050000B	LEVER,SHIFT ARM	1	
6	RN41050000A4	PLATE, KEEP	1	
7	26013-080202	Bolt, Hexa (8-20)	1	
8	22351-080032	PIN, SPRING (8-32)	1	
9	22117-180000	WASHER, PLAIN (Φ 18)	1	
10	22242-000180	SNAP RING, SHAFT (Φ 18)	1	
11	26557-040062	SCREW	1	

FIG 061A-2 Branson 2400	RANGE GEAR SHIFT LEVER(2018.03) _2400(h)	Year/Month 2020/01

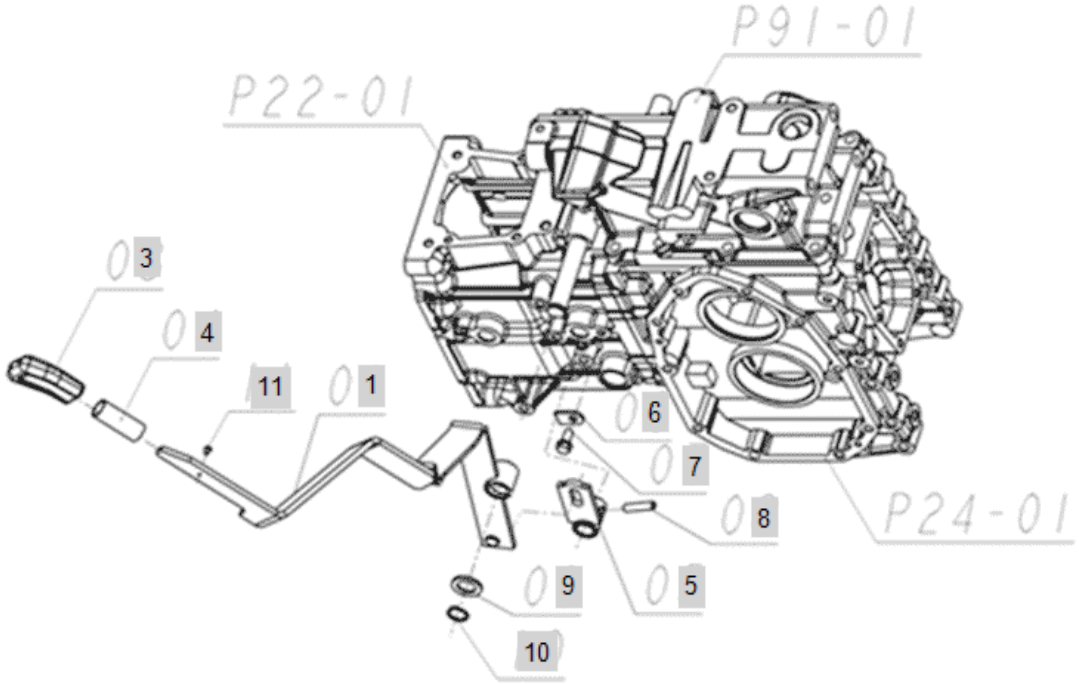

FIG 061A-2 Branson 2400	RANGE GEAR SHIFT LEVER(2018.03) _2400(h)	Year/Month 2020/01

KeyNo.	Part Number	Part Name	Quantity	Other
1	TA00054846A	RANGE SHIFT, LEVER ASS`Y(00)	1	
3	TA00017708A	KNOB(RED)	1	
4	TA00016636A	LEVER HOSE 16X60	1	
5	FE67050000B	LEVER,SHIFT ARM	1	
6	RN41050000A4	PLATE, KEEP	1	
7	26013-080202	Bolt, Hexa (8-20)	1	
8	22351-080030	PIN, SPRING (8-30)	1	
9	22117-180000	WASHER, PLAIN (Φ 18)	1	
10	22242-000180	SNAP RING, SHAFT (Φ 18)	1	
11	26023-040102	SCREW W/WASHER	1	

FIG 062A Branson 2400	FRONT WHEEL DRIVE LEVER _2400(h)	Year/Month 2020/01

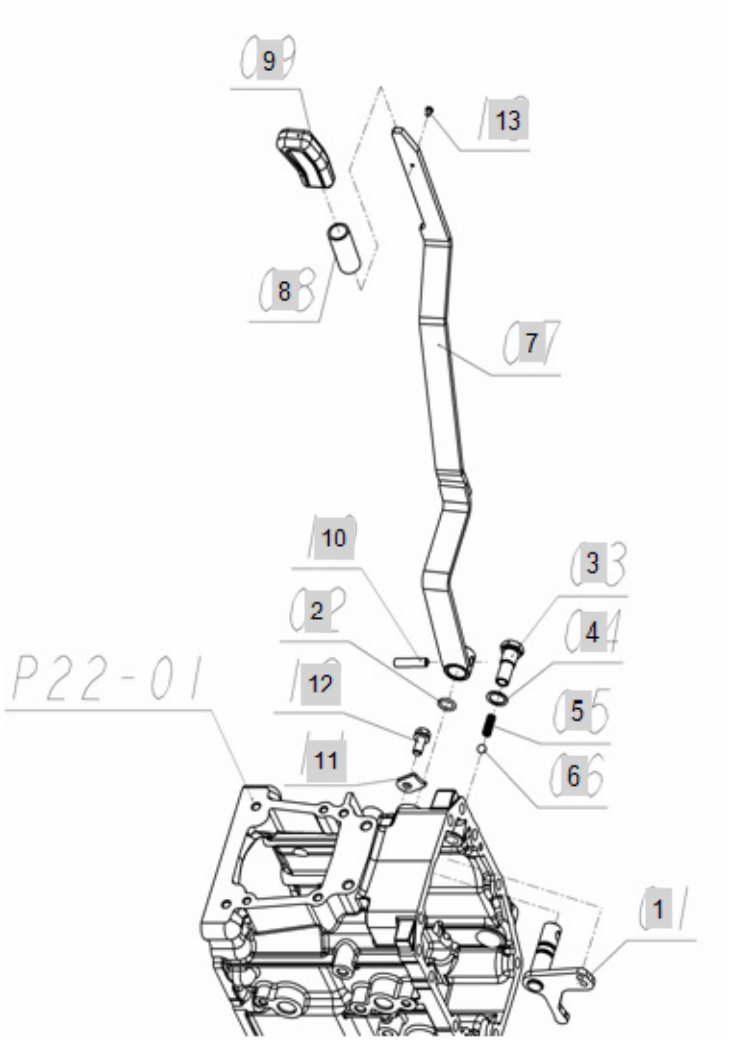

FIG 062A Branson 2400	FRONT WHEEL DRIVE LEVER _2400(h)	Year/Month 2020/01

KeyNo.	Part Number	Part Name	Quantity	Other
1	FE68010000A	ARM, 4WD SHIFT	1	
2	24311-000125	O-RING, DYNAMIC (Φ12.5)	1	
3	FE68030000A	PULG, 4WD	1	
4	23414-140000	PACKING14	1	
5	FE51030000B	SPRING	1	
6	24190-100001	Ball, Steel (5/16)	1	
7	FE68070000D	LEVEL, 4WD CHANGE	1	
8	TA00016637A	LEVER HOSE 16X80	1	
9	TA00017708A	KNOB(RED)	1	
10	22351-080032	PIN, SPRING (8-32)	1	
11	RN41050000A4	PLATE, KEEP	1	
12	26013-080202	Bolt, Hexa (8-20)	1	
13	26557-040062	SCREW	1	

FIG 063A-1 Branson 2400	PTO GEAR SHIFT LEVER _2400(h) _2400(h)	Year/Month 2020/01

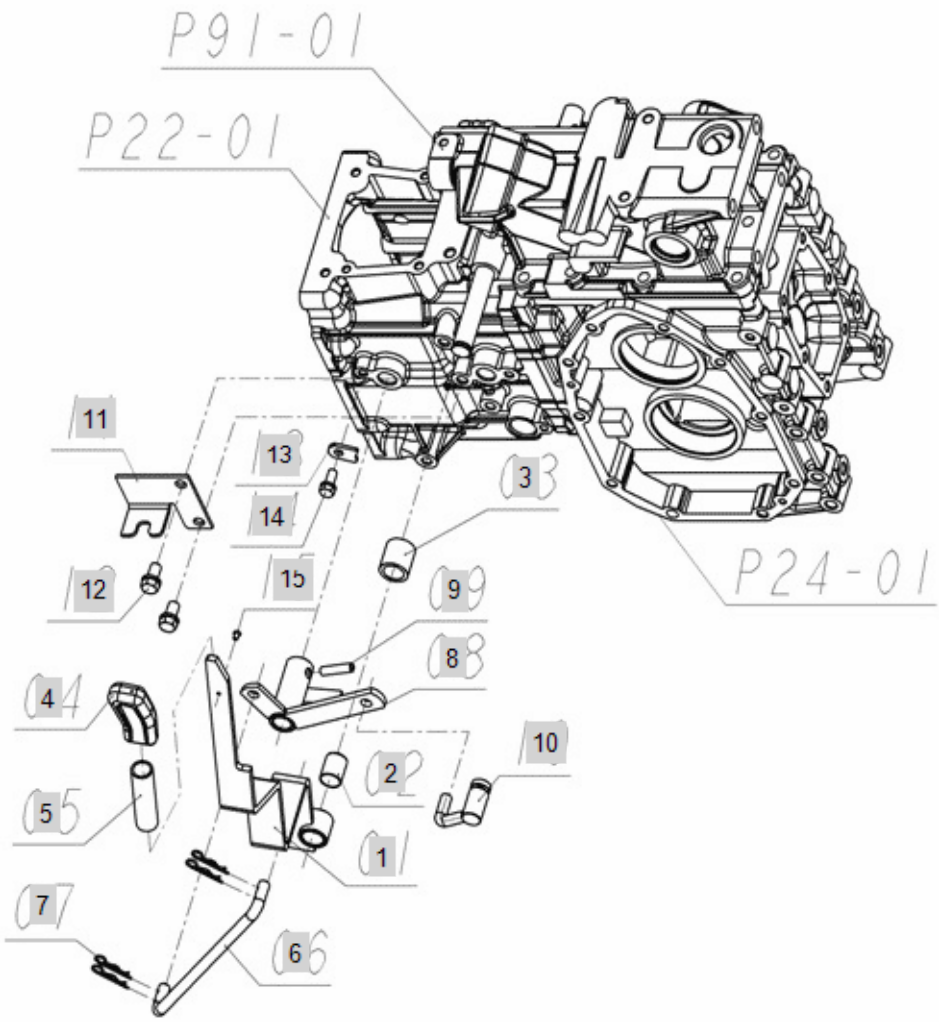

FIG 063A-1 Branson 2400	PTO GEAR SHIFT LEVER _2400(h) _2400(h)	Year/Month 2020/01

KeyNo.	Part Number	Part Name	Quantity	Other
1	FE69010000D	LEVER, PTO SHIFT	1	
2	24550-018250	DRYBUSH	1	
3	FE69030000A	Collar	1	
4	TA00017709A	KNOB(YELLOW)	1	
5	TA00016637A	LEVER HOSE 16X80	1	
6	FE69060000A	Rod, PTO	1	
7	22360-100000	PIN , SNAP (10Φ)	4	
8	FE69080000B	PTO LEVER	1	
9	22351-080032	PIN, SPRING (8-32)	1	
10	FE69100000A	ROD	1	
11	FE69110000B	STAY	1	
12	26013-100202	BOLT(+SW)	2	
13	RN41050000A4	PLATE, KEEP	1	
14	26013-080202	Bolt, Hexa (8-20)	1	
15	26557-040062	SCREW	1	

FIG 063A-2 Branson 2400	PTO GEAR SHIFT LEVER _2400(h)	Year/Month 2020/01

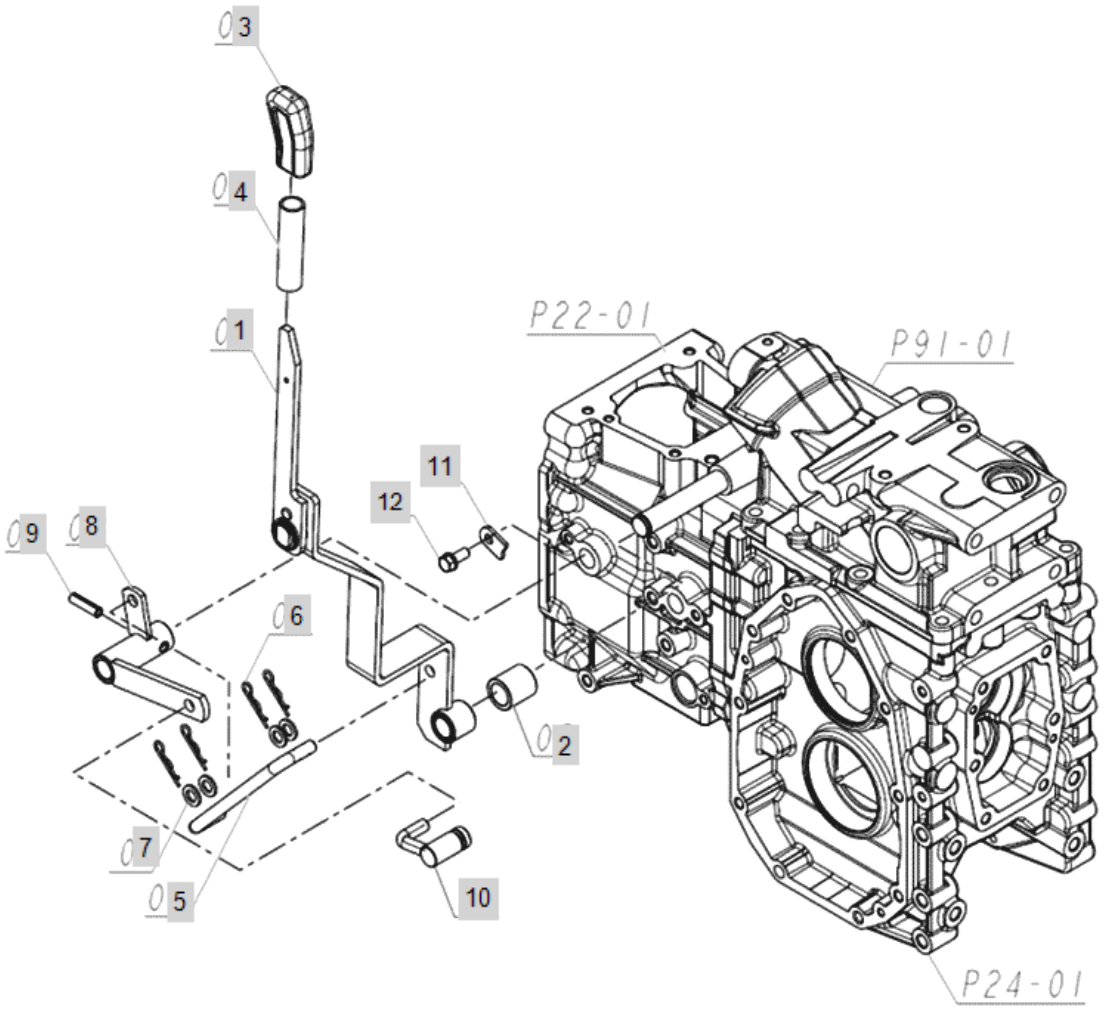

FIG 063A-2 Branson 2400	PTO GEAR SHIFT LEVER _2400(h)	Year/Month 2020/01

KeyNo.	Part Number	Part Name	Quantity	Other
1	TA00051666A	ASS,Y, PTO LEVER	1	
2	FE69030000A	Collar	1	
3	TA00017709A	KNOB(YELLOW)	1	
4	TA00053460A	HOSE, LEVER	1	
5	FE69060000B		1	
6	22360-100000	PIN , SNAP (10Φ)	4	
7	22117-100000	WASHER, PLAIN (Φ 10)	4	
8	FE69080000C		1	
9	22351-080030	PIN, SPRING (8-30)	1	
10	FE69100000A	ROD	1	
11	RN41050000A4	PLATE, KEEP	1	
12	26013-100202	BOLT(+SW)	1	

FIG 064A Branson 2400	HYDRAULIC CONTROL LEVER	Year/Month 2020/01

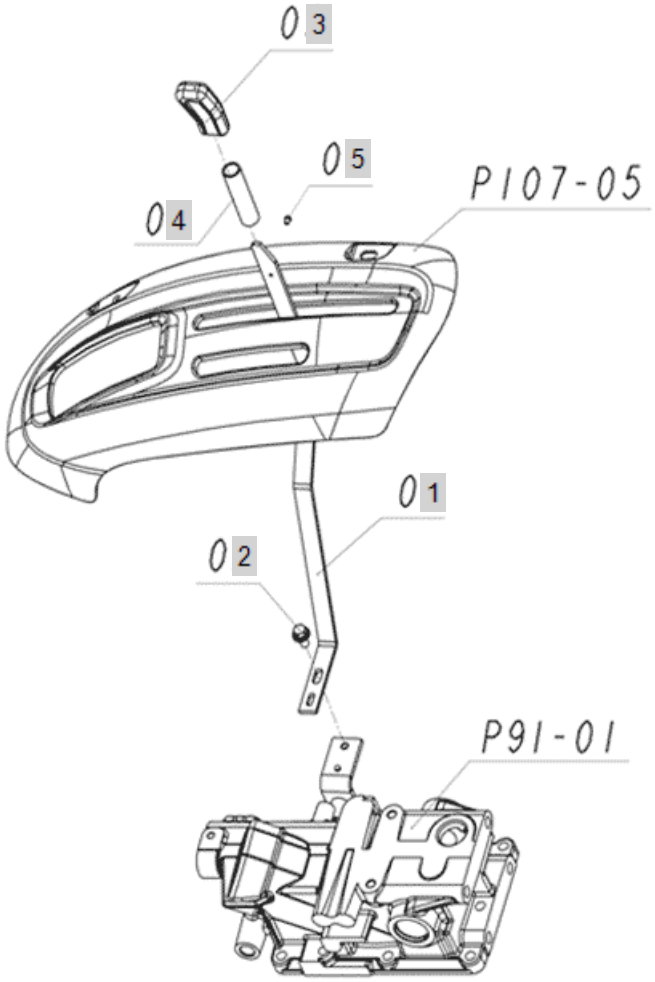

FIG 064A Branson 2400	HYDRAULIC CONTROL LEVER	Year/Month 2020/01

KeyNo.	Part Number	Part Name	Quantity	Other
1	FE70010000D	LEVER, HYD. CONTROL	1	
2	26014-080202	Bolt, Hexa (8-20)	1	
3	TA00017710B	KNOB(BLACK)	1	
4	TA00016637A	LEVER HOSE 16X80	1	
5	26023-040102	SCREW W/WASHER	1	

FIG 066A Branson 2400	DIFFERENTIAL LOCK PEDAL	Year/Month 2020/01

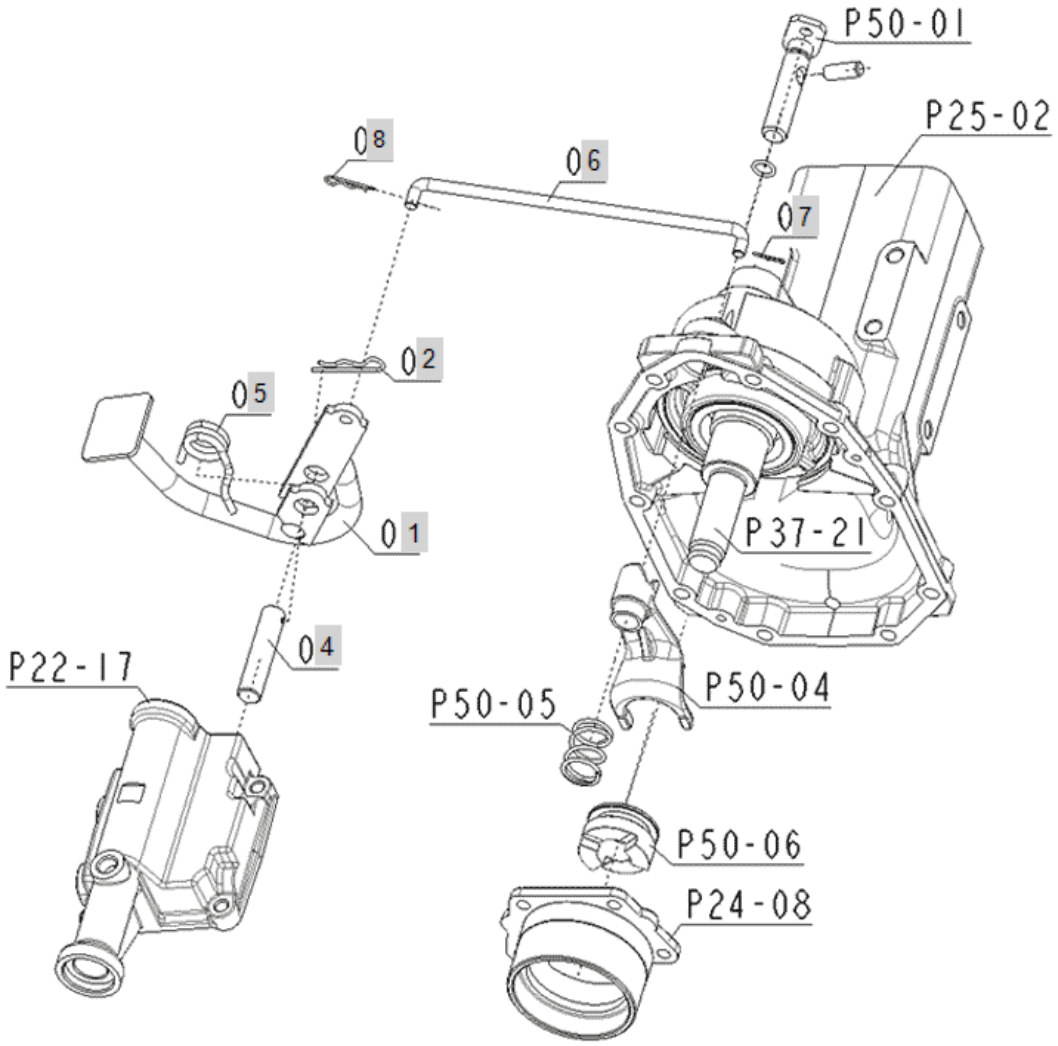

FIG 066A Branson 2400	DIFFERENTIAL LOCK PEDAL	Year/Month 2020/01

KeyNo.	Part Number	Part Name	Quantity	Other
1	FE72010000B	DIFFERANTIAL FIXING PEDAL	1	
2	22360-160000	PIN , SNAP (6Φ)	1	
4	FE72040000A	PIVOT SHAFT, DIFF PEDAL	1	
5	FE72050000B		1	
6	FE72060000A	ROD, DIFF LOCK	1	
7	22417-200160	PIN , COTTER (2-16)	1	
8	22360-080000	PIN , SNAP (8Φ)	1	

FIG 068 Branson 2400	FRONT AXLE FRAME	Year/Month 2020/01

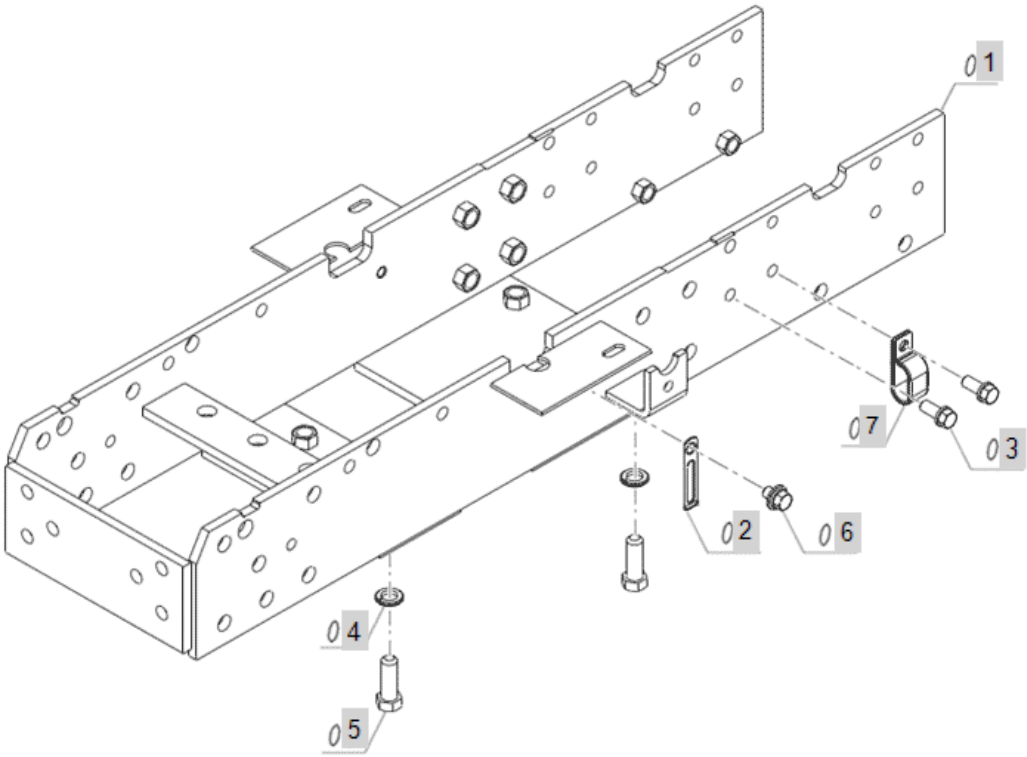

FIG 068 Branson 2400	FRONT AXLE FRAME	Year/Month 2020/01

KeyNo.	Part Number	Part Name	Quantity	Other
1	TA00053338A	FRONT AXEL BRACKET	1	
1-1	FE74010000F	COMP. FRAME, FRONT	1	delete
2	TCD5320000A4	Clamp, Wire D	1	
3	26013-100252	SCREW,CAPTIVEWASHERCAP	16	
4	22217-140000	WASHER, SPRING (Φ 14)	4	
5	26116-140402	BOLT	4	
6	26014-100162	HEX BOLT W/WASHER	1	
7	CA18080000A4	CLIPCDD-173219	1	

FIG 069A-1 Branson 2400	FRONT AXLE CASE	Year/Month 2020/01

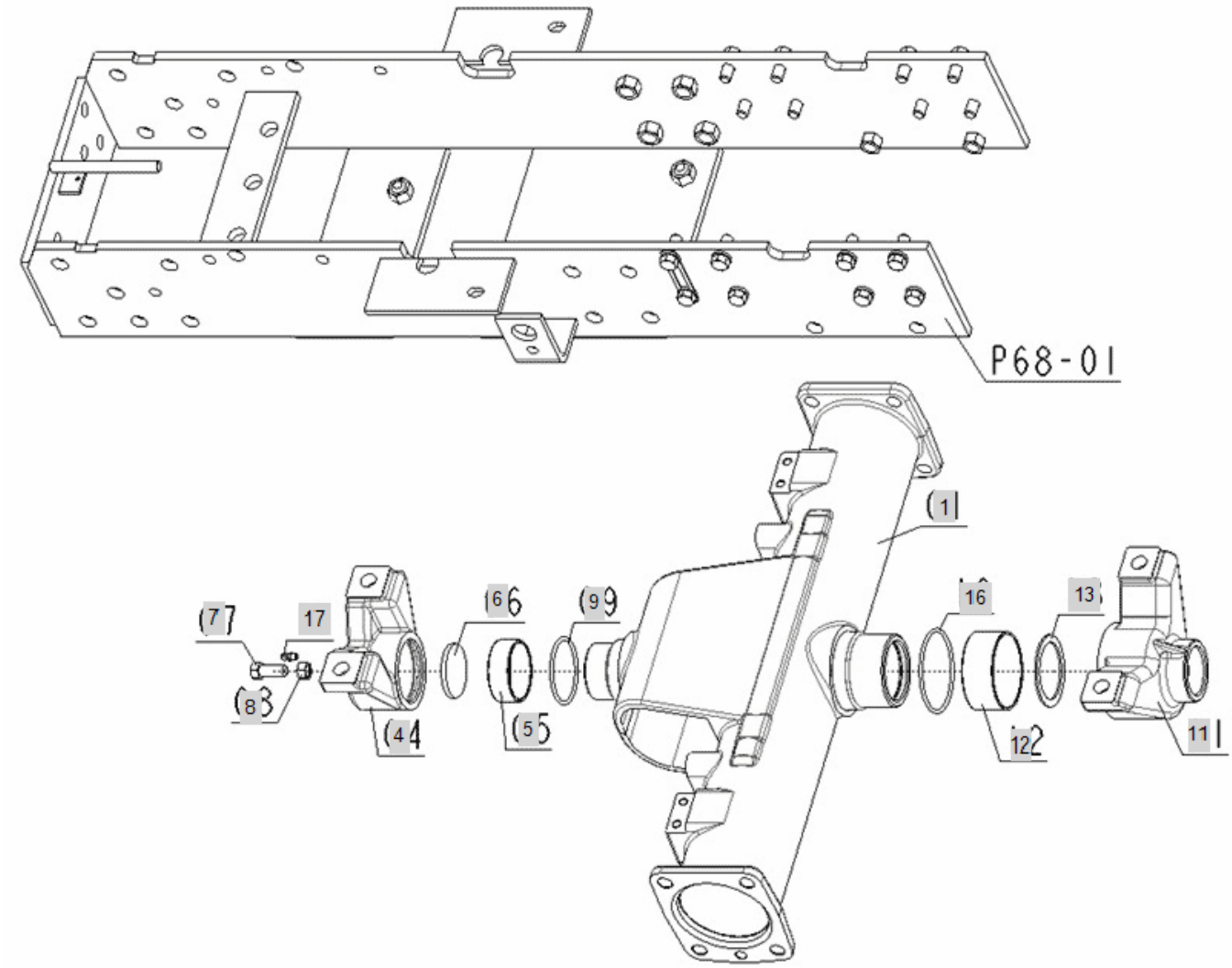

FIG 069A-1 Branson 2400	FRONT AXLE CASE	Year/Month 2020/01

KeyNo.	Part Number	Part Name	Quantity	Other
1	FE76010000A	CASE, FRONT AXLE	1	
4	FE76040000A	HOLDER,FRONT	1	
5	24550-050200	BUSH,DRY	1	
6	FE76060000A	COLLAR, THRUST	1	
7	26116-100252	BOLT7T(100X25)	1	
8	26716-100002	Nut, Hexa (Φ10)	1	
9	24321-000550	SEAL,O-RING	1	
11	FE76100000A	HOLDER	1	
12	24550-065300	DRY BUSH	1	
13	FE76120000A	COLLAR, THRUST	1	
16	24321-000700	O-RING1AG-70	1	
17	24764-060000	GREASE NIPPLE	1	

FIG 069A-2 Branson 2400	FRONT AXLE CASE(2017.10)	Year/Month 2020/01

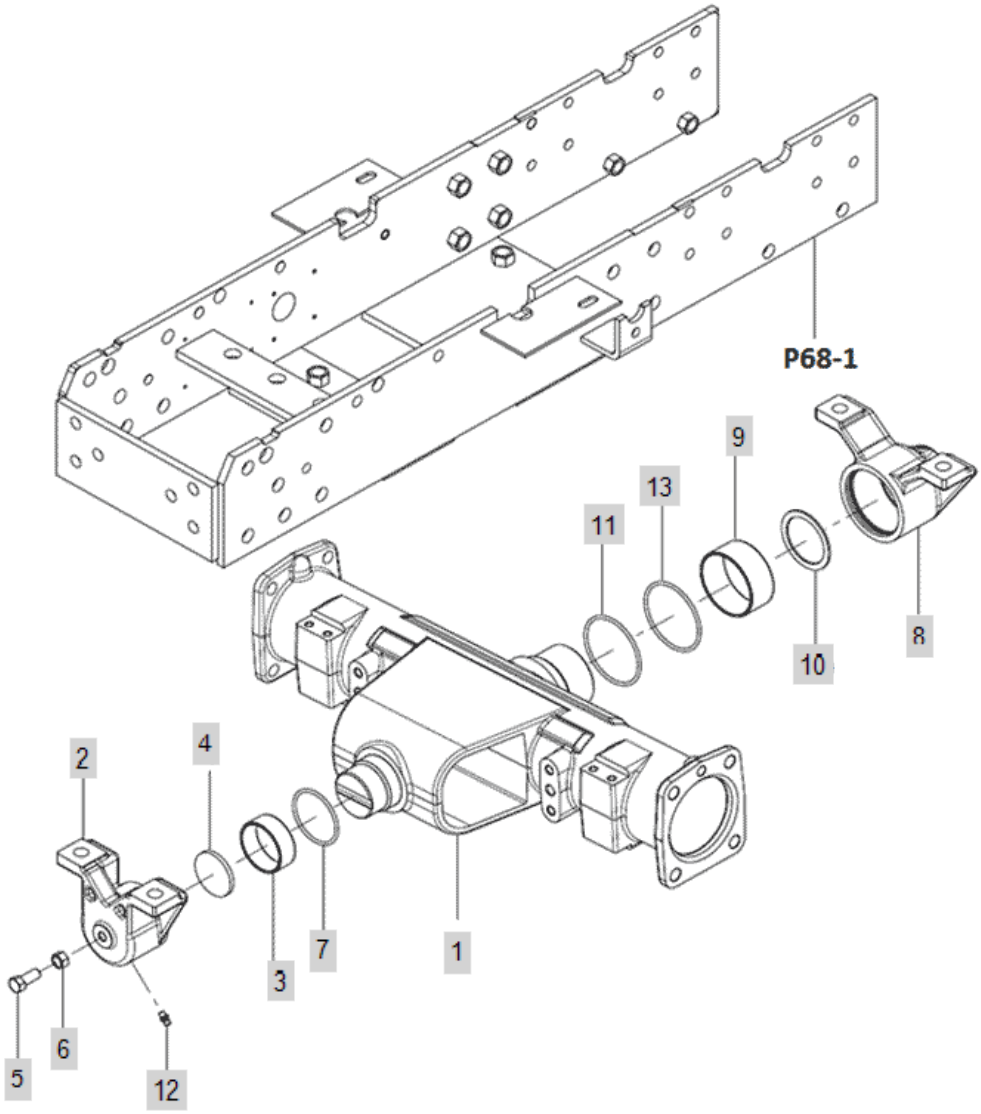

FIG 069A-2 Branson 2400	FRONT AXLE CASE(2017.10)	Year/Month 2020/01

KeyNo.	Part Number	Part Name	Quantity	Other
1	FE76010000B	CASE, FRONT AXLE	1	
2	FE76040000B		1	
3	24550-050200	BUSH,DRY	1	
4	FE76060000A	COLLAR, THRUST	1	
5	26116-100252	BOLT7T(100X25)	1	
6	26716-100002	Nut, Hexa (Φ10)	1	
7	24321-000550	SEAL,O-RING	1	
8	FE76100000B		1	
9	24550-065300	DRY BUSH	1	
10	FE76120000A	COLLAR, THRUST	1	
11	24321-000700	O-RING1AG-70	1	
12	24764-060000	GREASE NIPPLE	1	
13	24321-000650	O-RING, FIX(Φ65)	1	

FIG 070-1 Branson 2400	FRONT DIFFERENTIAL	Year/Month 2020/01

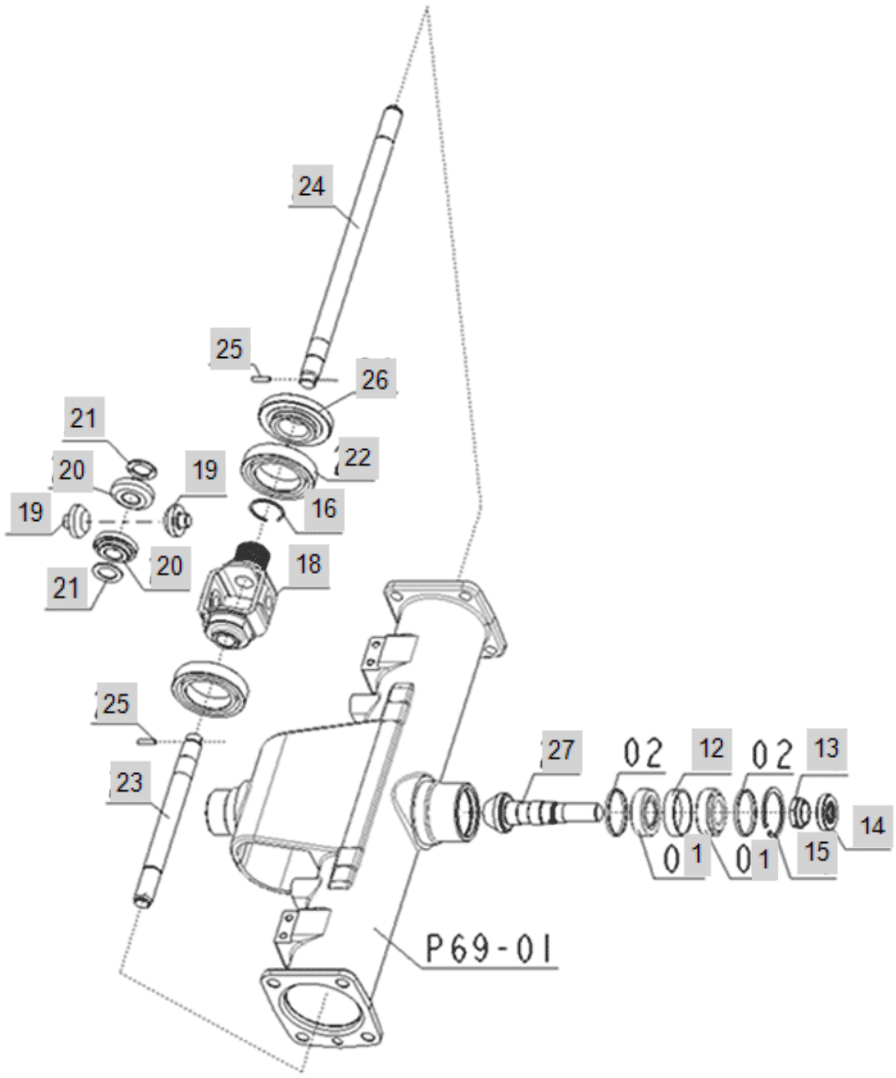

FIG 070-1 Branson 2400	FRONT DIFFERENTIAL	Year/Month 2020/01

KeyNo.	Part Number	Part Name	Quantity	Other
1	24142-302050	ROLLER BEARING	2	
12	FE77120000A	COLLAR	1	
13	FE77130000A	LOCK NUT, PINION	1	
14	FE77140000A	OIL SEAL, FRONT AXLE	1	
15	22252-000520	RING, CIRCLIP (Φ 52)	1	
16	24164-000352	STOP RING	1	
18	FE77180000A	Case, Front Differential	1	
19	FE77190000A	Pinion, Front Differential Bevel Gear	2	
20	FE77200000A	Gear, Bevel 14T	2	
21	FE77210000A	Collar, Front Differential Pinion	2	
22	24101-060104	Bearing, Ball (#6010)	2	
22-1	TA00000750A	BALL BEARING	2	delete
23	FE77230000A	Shaft, Front Differential York L	1	
24	FE77240000A	Shaft, Front Differential York R	1	
25	22351-050020	PIN, SPRING (5-20)	2	
26	FE77260200A	Gear, Front Differential Ring	1	
27	FE77260100A	PINION, DRIVE	1	

FIG 070-2 Branson 2400	FRONT DIFFERENTIAL	Year/Month 2020/01

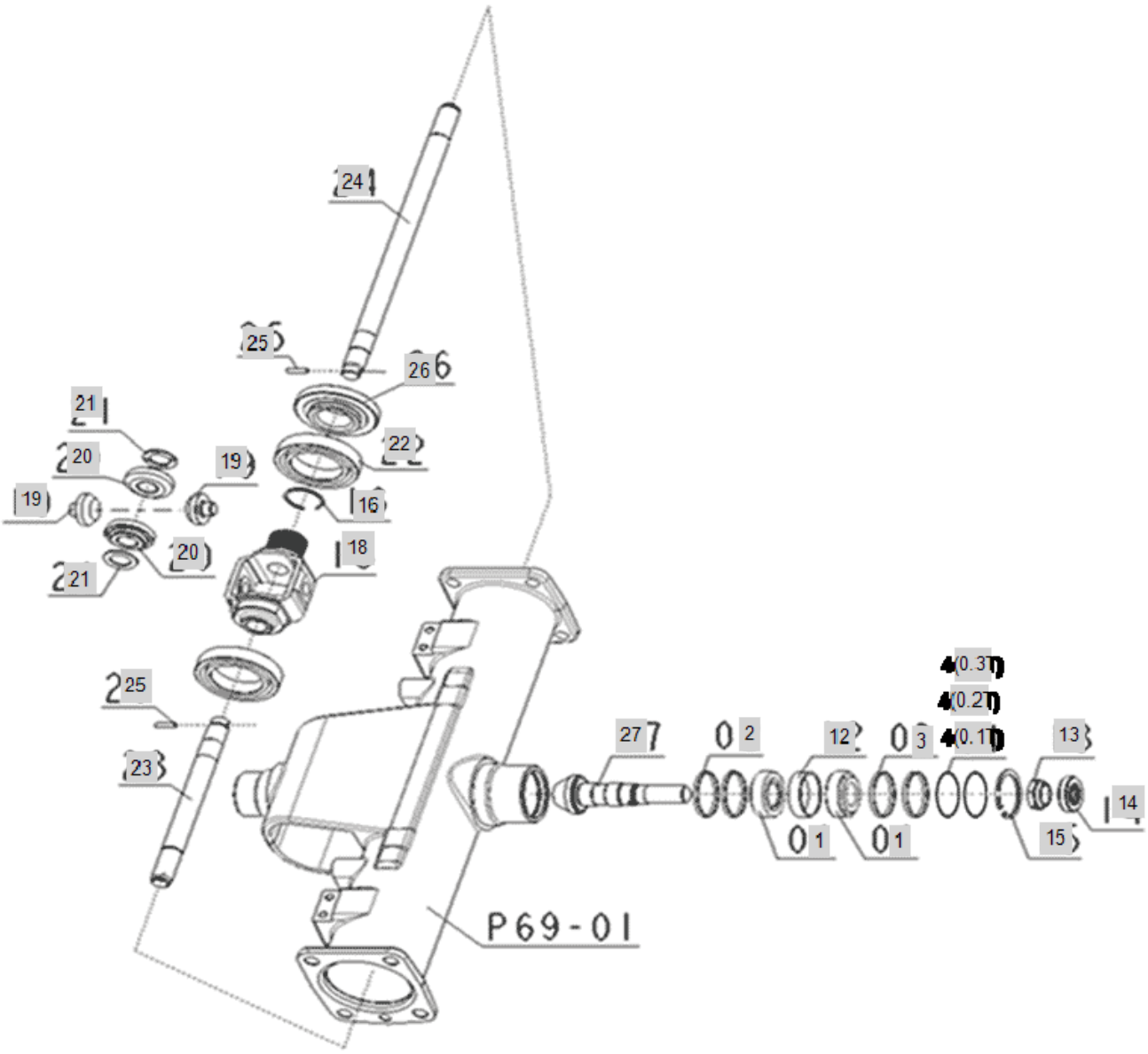

FIG 070-2 Branson 2400	FRONT DIFFERENTIAL	Year/Month 2020/01

KeyNo.	Part Number	Part Name	Quantity	Other
1	24142-302050	ROLLER BEARING	2	
2	TA00060445A	COLLAR(2.0T)	2	
3	TA00060444A	COLLAR(1.6T)	2	
4(0.1T)	TA00060446A	SHIM(0.1)	2	
4(0.2T)	TA00060447A	SHIM(0.2)	2	
4(0.3T)	TA00060448A	SHIM(0.3)	2	
12	FE77120000A	COLLAR	1	
13	FE77130000A	LOCK NUT, PINION	1	
14	FE77140000A	OIL SEAL, FRONT AXLE	1	
15	22252-000520	RING, CIRCLIP (Φ 52)	1	
16	24164-000352	STOP RING	1	
18	FE77180000A	Case, Front Differential	1	
19	FE77190000A	Pinion, Front Differential Bevel Gear	2	
20	FE77200000A	Gear, Bevel 14T	2	
21	FE77210000A	Collar, Front Differential Pinion	2	
22	24101-060104	Bearing, Ball (#6010)	2	
23	FE77230000A	Shaft, Front Differential York L	1	
24	FE77240000A	Shaft, Front Differential York R	1	
25	22351-050020	PIN, SPRING (5-20)	2	
26	FE77260200A	Gear, Front Differential Ring	1	
27	FE77260100A	PINION, DRIVE	1	

FIG 071.	DIFFERENTIAL GEAR SHAFT	Year/Month
Branson 2400		2020/01

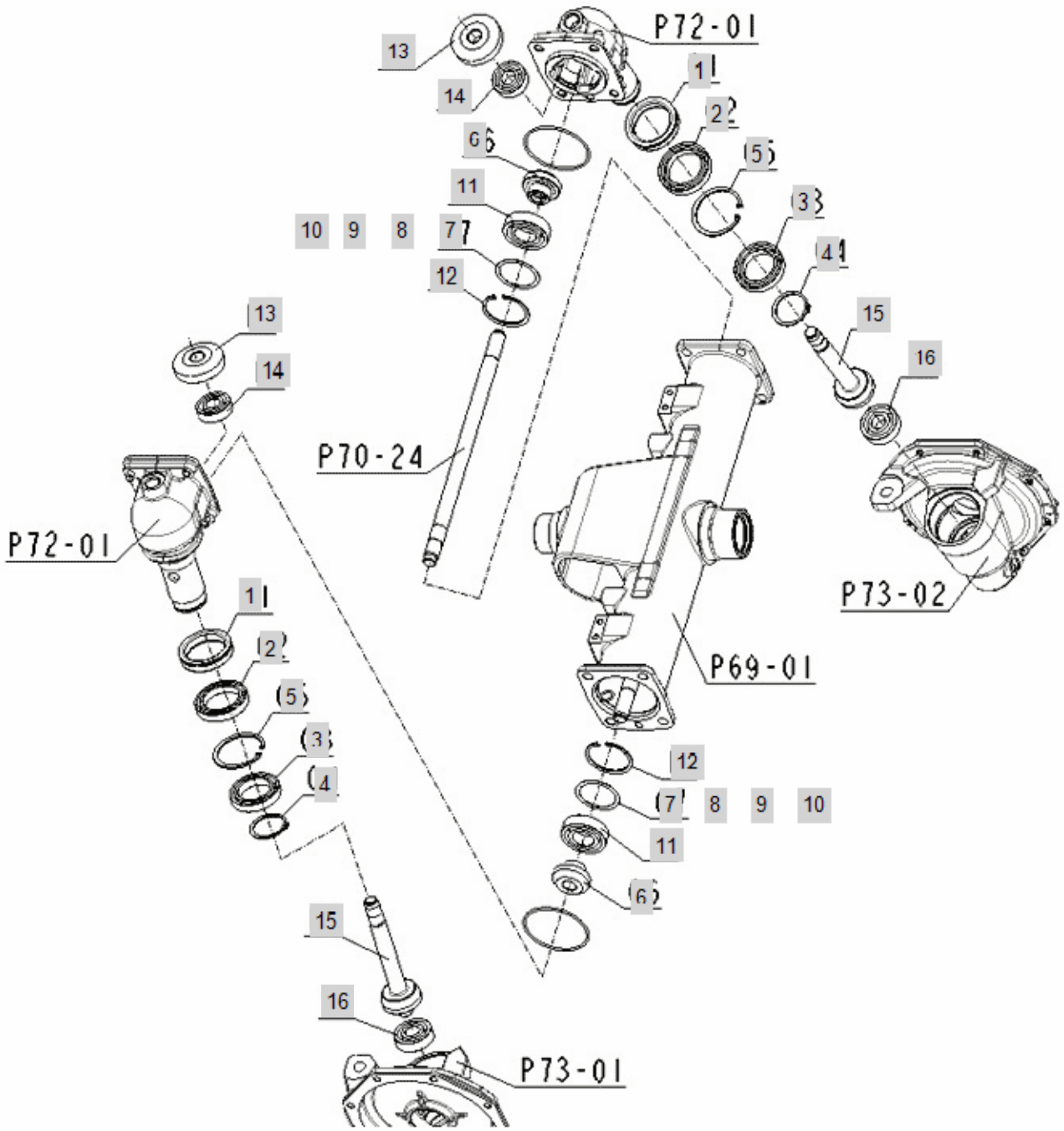

FIG 071. Branson 2400	DIFFERENTIAL GEAR SHAFT	Year/Month 2020/01

KeyNo.	Part Number	Part Name	Quantity	Other
1	FE78010000B	OIL SEAL (55X72X13.5)	2	
2	24101-069104	BALL BEARING #0691	2	
2-1	TA00016999A	BALL BEARING #6910	2	DELETE
3	24101-069094	DEEP GROOVE BALL BEARING	2	
3-1	TA00017000A	BALL BEARING#6909	2	DELETE
4	22242-000450	SNAP RING, SHAFT (Φ 45)	2	
5	22252-000680	RING, CIRCLIP (Φ 68)	2	
6	FE78060000A	GEAR	2	
7-1	FE78070000A	SHIM 0.8	2	
7-2	FE78080000A	SHIM 1.0	2	
7-3	FE78090000A	SHIM 0.6	2	
7-4	FE78100000A	SHIM 1.4	2	
11	24101-062064	BALL BEARING (#6206)	2	
11-1	TA00017001A	BALL DEARING#6206	2	DELETE
12	22252-000620	RING, CIRCLIP (Φ 62)	2	
13	FE78130000A	GEAR	2	
14	24101-062044	Bearing, Ball (#6204)	2	
14-1	TA00016550A	BALL BEARING	2	DELETE
15	FE78150000A	SHAFT, BEVEL GEAR	2	
16	24101-063044	BALL BEARING	2	
16-1	TA00016554A	BALL BEARING	2	DELETE

FIG 072-1 Branson 2400	BEVEL GEAR CASE	Year/Month 2020/01

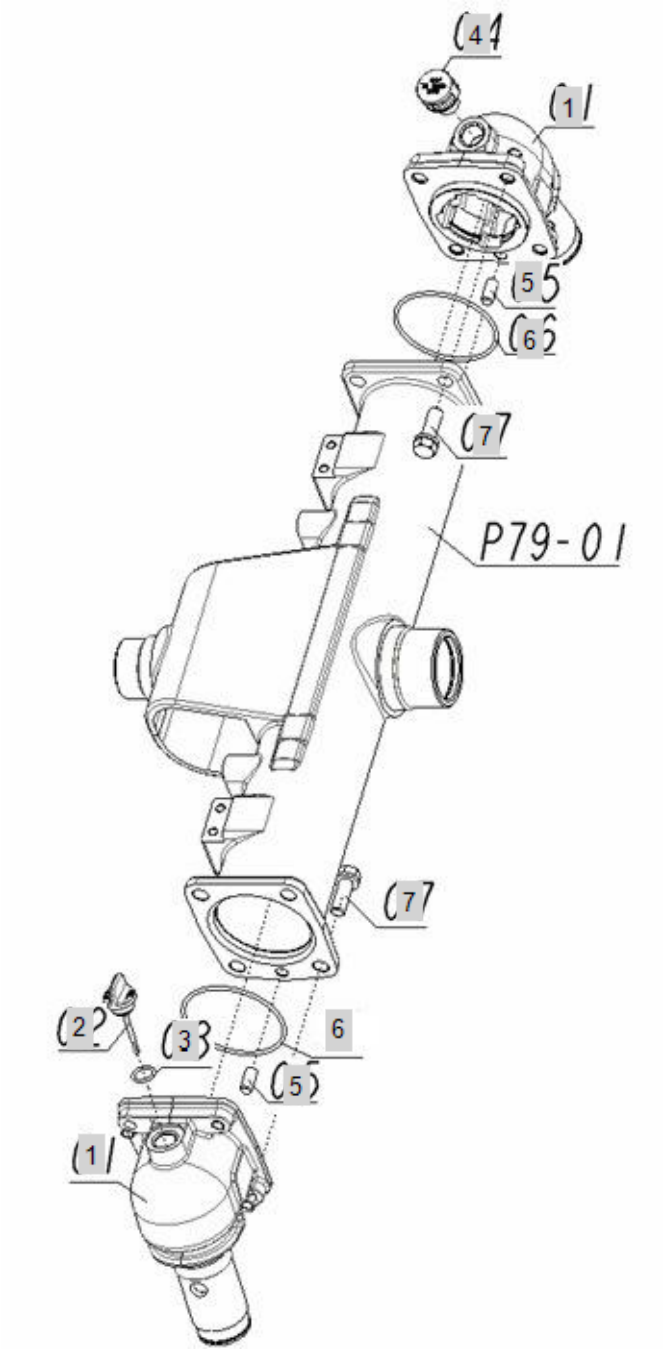

FIG 072-1 Branson 2400	BEVEL GEAR CASE	Year/Month 2020/01

KeyNo.	Part Number	Part Name	Quantity	Other
1	FE79010000B	CASE, BEVEL GEAR	2	
2	FE79020000A	GUAGE,OIL	1	
3	24311-000180	O-RING, DYNAMIC (Φ18)	1	
4	TC60790000B3	CAP(M20),OIL	1	
5	22312-100200	PIN, DOWEL (10-20)	2	
6	24321-000850	ORING(G85)	2	
7	26013-120352	SCREW,CAPTIVEWASHERCAP	8	

FIG 072-2 Branson 2400	BEVEL GEAR CASE(2017.05)	Year/Month 2020/01

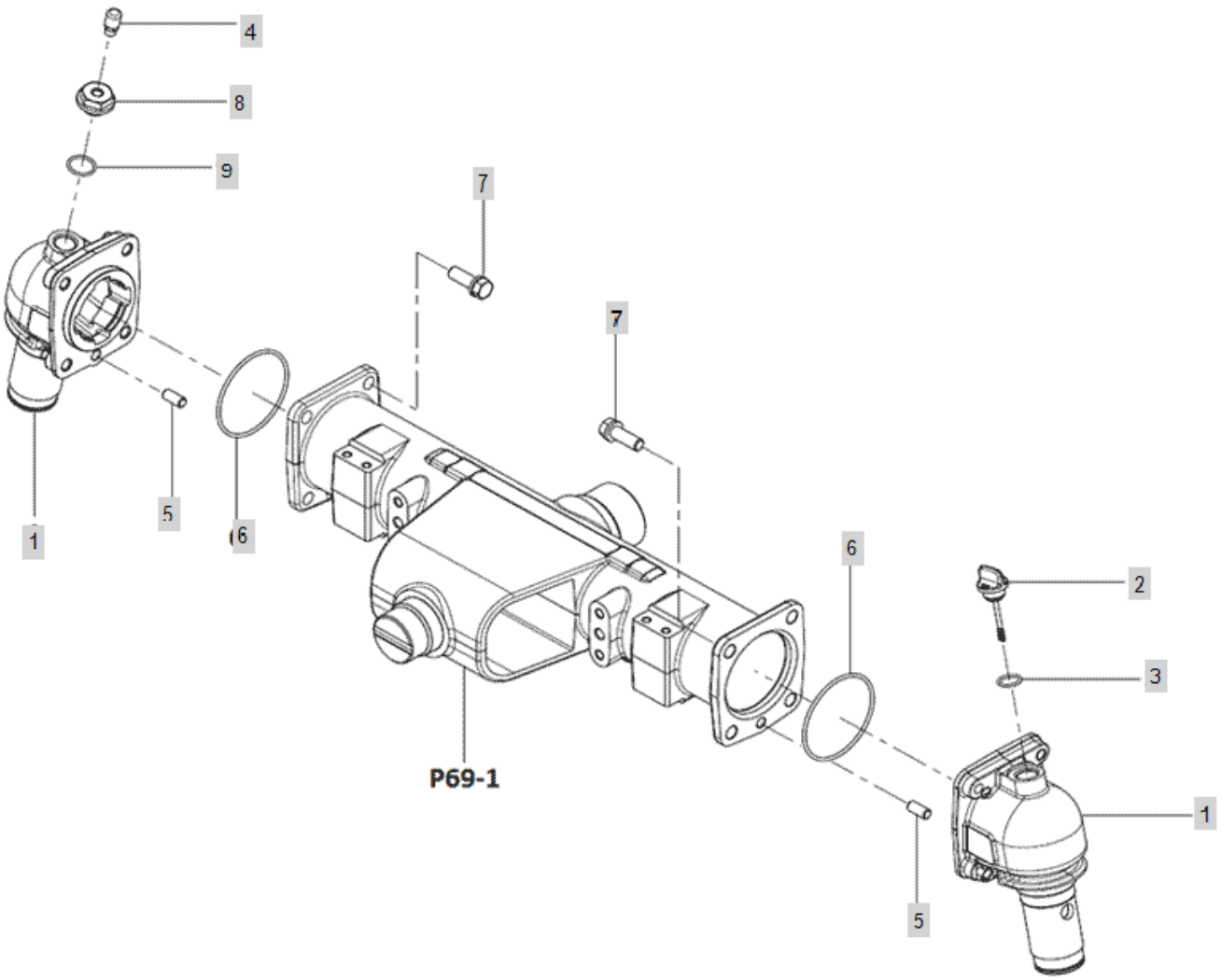

FIG 072-2 Branson 2400	BEVEL GEAR CASE(2017.05)	Year/Month 2020/01

KeyNo.	Part Number	Part Name	Quantity	Other
1	FE79010000B	CASE, BEVEL GEAR	2	
2	FE79020000A	GUAGE,OIL	1	
3	24311-000180	O-RING, DYNAMIC (Φ18)	1	
4	TA00049842A	AIR BREATHER	1	
5	22312-100200	PIN, DOWEL (10-20)	2	
6	24321-000850	ORING(G85)	2	
7	26013-120352	SCREW,CAPTIVEWASHERCAP	8	
8	TA00049843A	ADAPTHER	1	
9	24311-000220	O-RING, DYNAMIC (Φ22)	1	

FIG 073. Branson 2400	FRONT AXLE CASE	Year/Month 2020/01

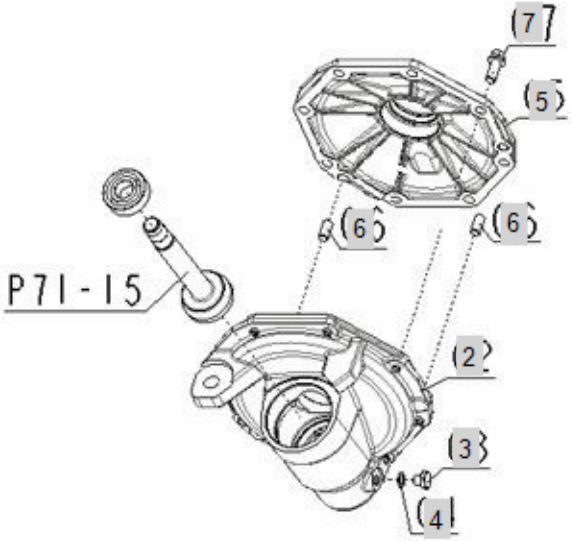

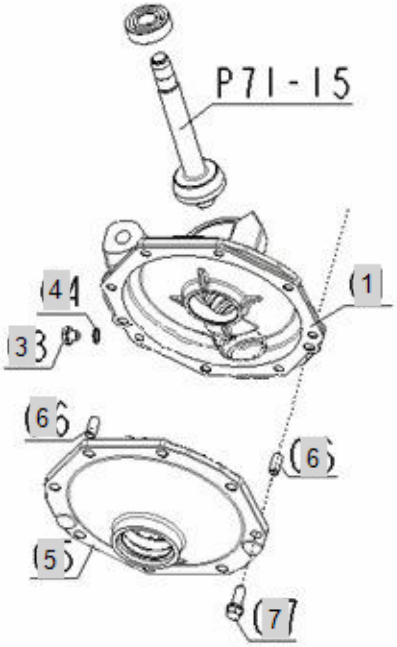

FIG 073. Branson 2400	FRONT AXLE CASE	Year/Month 2020/01

KeyNo.	Part Number	Part Name	Quantity	Other
1	FE80010000C	CASE, GEAR LH	1	
2	FE80020000C	CASE, GEAR RH	1	
3	23887-100002	SCREW,HEXAGONHEADCAP	2	
4	23414-100000	PLAIN WASHER (D10)	2	
5	FE80050000A	COVER,GEAR CASE	2	
6	22312-100200	PIN, DOWEL (10-20)	4	
7	26013-100282	BOLT	16	

FIG 074-1 Branson 2400	FRONT AXLE	Year/Month 2020/01

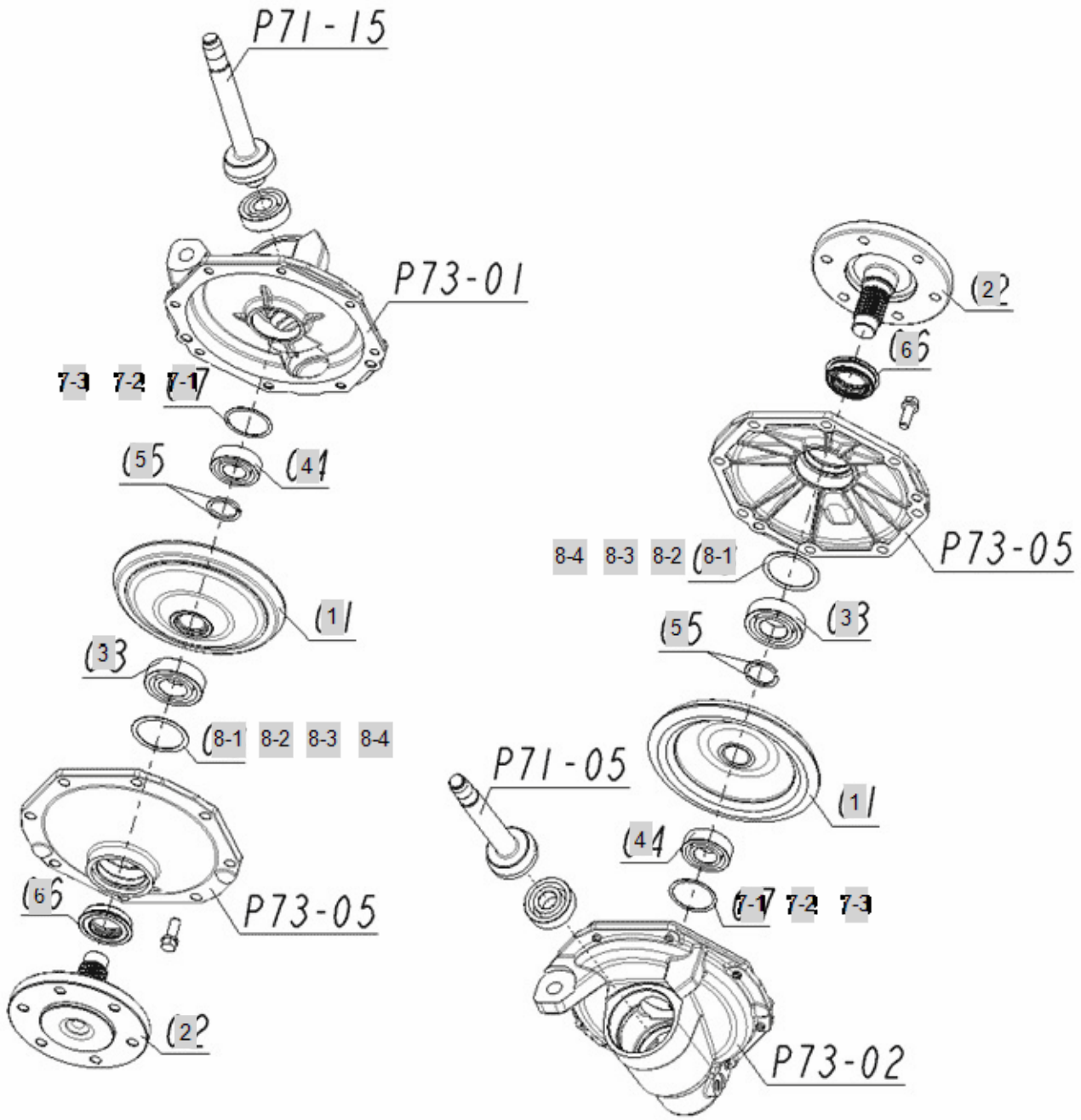

FIG 074-1 Branson 2400	FRONT AXLE	Year/Month 2020/01

KeyNo.	Part Number	Part Name	Quantity	Other
1	FE81010000A	BEVEL GEAR	2	
2	FE81020000A	FRONT SPINDLE	2	
3	TA00017001A	BALL DEARING#6206	2	
4	TA00000753A	BALL BEARING	2	
5	FE81060000A	SET COLLAR	4	
6	FE81070000A	SEAL,OIL	2	
7-1	FE81080000A	SHIM 0.8	2	
7-2	FE81090000A	SHIM 1.0	2	
7-3	FE81100000A	SHIM 1.2	2	
8-1	FE78070000A	SHIM 0.8	2	
8-2	FE78080000A	SHIM 1.0	2	
8-3	FE78090000A	SHIM 0.6	2	
8-4	FE78100000A	SHIM 1.4	2	

FIG 074-2 Branson 2400	FRONT AXLE(2017.05)	Year/Month 2020/01

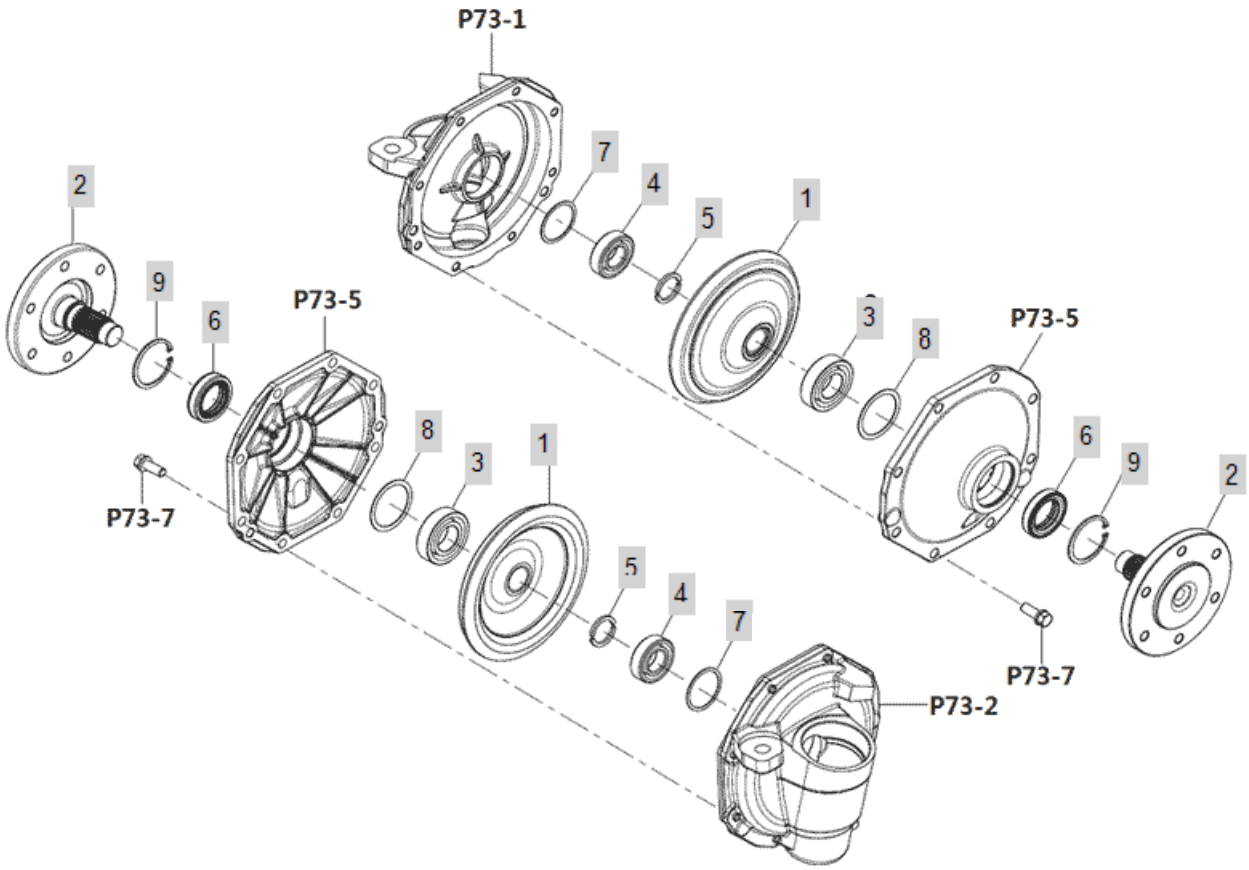

FIG 074-2 Branson 2400	FRONT AXLE(2017.05)	Year/Month 2020/01

KeyNo.	Part Number	Part Name	Quantity	Other
1	FE81010000A	BEVEL GEAR	2	
2	FE81020000A	FRONT SPINDLE	2	
3	24101-062064	BALL BEARING (#6206)	2	
3-1	TA00017001A	BALL DEARING#6206	2	DELETE
4	24101-06205		2	
4-1	TA00000753A	BALL BEARING	2	DELETE
5	FE81060000A	SET COLLAR	4	
6	TA00044968A	OIL SEAL	2	
7-1	FE81080000A	SHIM 0.8	2	
7-2	FE81090000A	SHIM 1.0	2	
7-3	FE81100000A	SHIM 1.2	2	
8-1	FE78070000A	SHIM 0.8	2	
8-2	FE78080000A	SHIM 1.0	2	
8-3	FE78090000A	SHIM 0.6	2	
8-4	FE78100000A	SHIM 1.4	2	
9	22252-000550	RING, CIRCLIP (Φ 55)	2	

FIG 075A Branson 2400	FORNT DRIVE SHAFT	Year/Month 2020/01

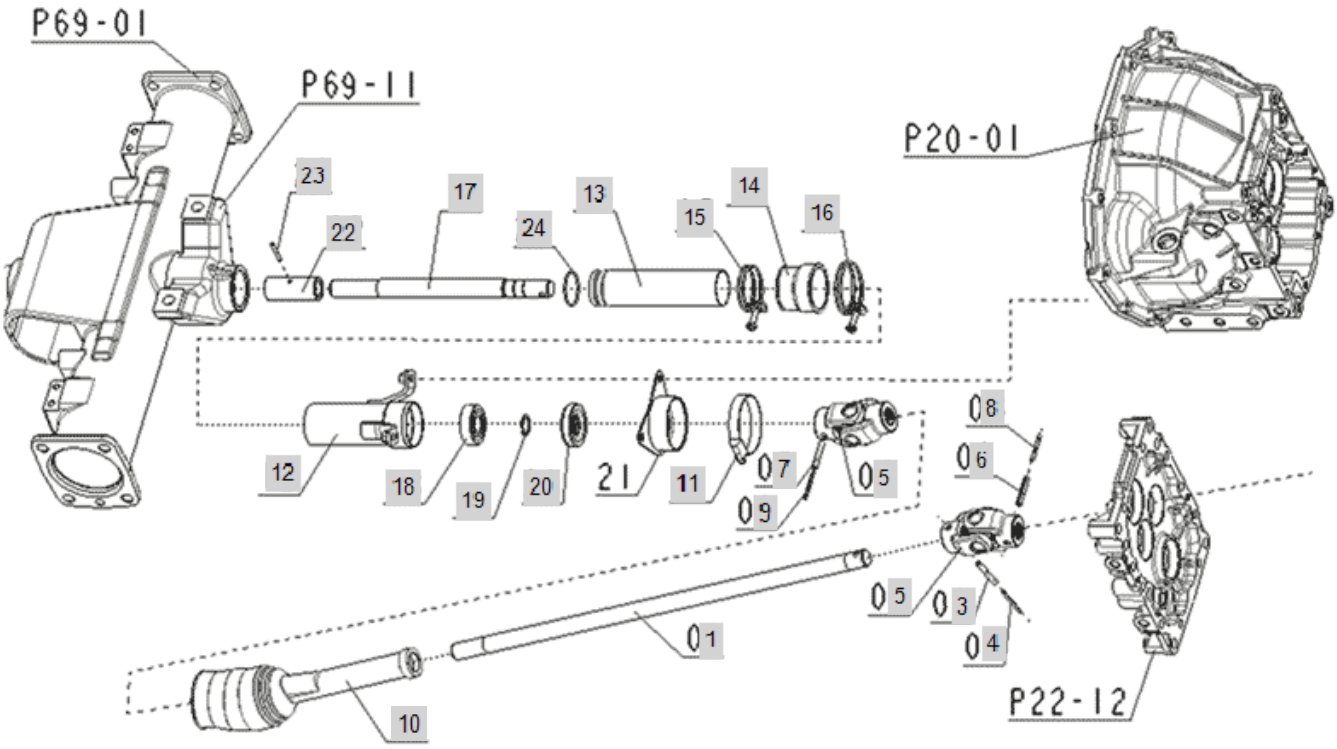

FIG 075A Branson 2400	FORNT DRIVE SHAFT	Year/Month 2020/01

KeyNo.	Part Number	Part Name	Quantity	Other
1	FE82010000A	SHAFT,DRIVE	1	
3	22351-060040	PIN, SPRING (6-40)	1	
4	22351-035040	PIN, SPRING (3-04)	1	
5	FE82050000A	ASS'Y JOINT, UNIVERSAL	1	
6	22351-060040	PIN, SPRING (6-40)	1	
7	22351-060040	PIN, SPRING (6-40)	1	
8	22351-035040	PIN, SPRING (3-04)	1	
9	22351-035040	PIN, SPRING (3-04)	1	
10	FE82100000A	COVER	1	
11	23000-070000	CLAMP,HOSE	1	
12	FE82120000B	COVER A, FRONT DRIVE SHAFT	1	
13	TA00041304A	COVER ASS'Y	1	
14	FE82140000A	COVER C	1	
15	23010-050000	HOSEBAND50	1	
16	23010-058000	HOSEBAND58	1	
17	FE82170000A	DRIVE SHAFT,FRONT	1	
18	TA00016551A	BALL BEARING	1	
19	22242-000200	SNAP RING, SHAFT (Φ 20)	1	
20	FE82200000A	SEAL,OIL	1	
21	FE82210000A	SUPPORT	1	delete
22	FE82220000A	COUPLING	1	
23	22351-040030	PIN, SPRING (4-03)	1	
24	24341-000390	O-RING, FIX (Φ39)	1	

FIG 077.	PST CYLINDER COVER	Year/Month
Branson 2400		2020/01

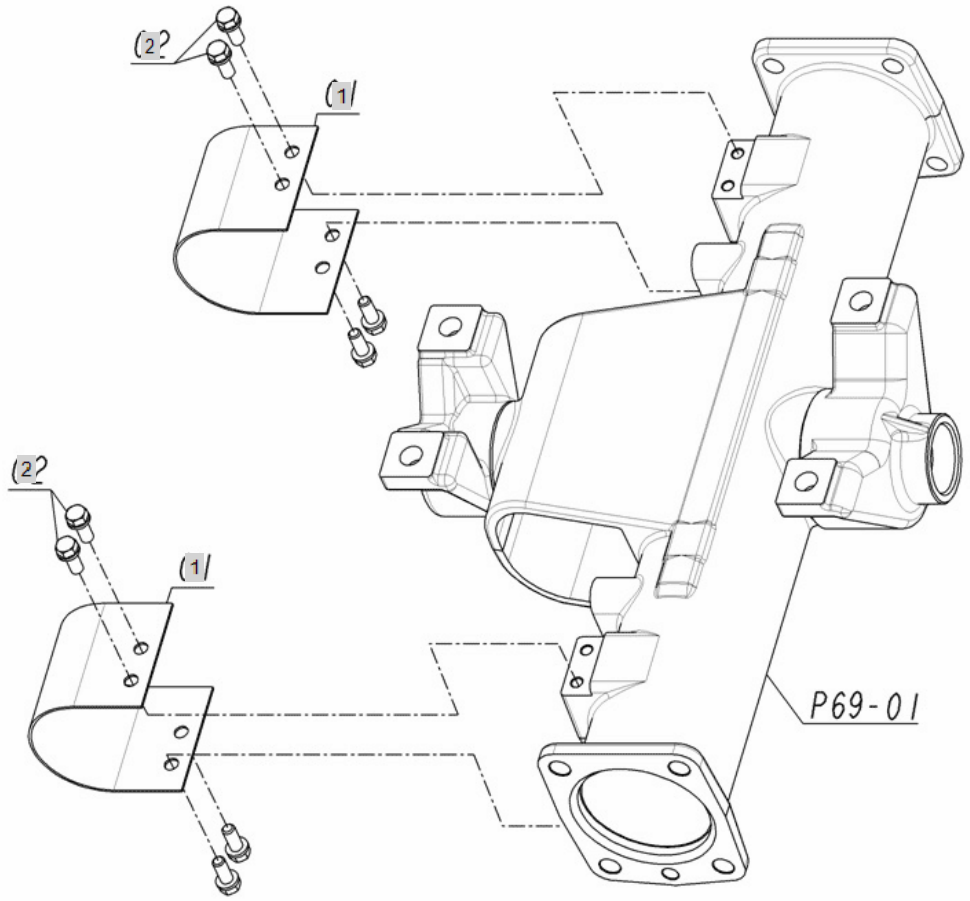

FIG 077. Branson 2400	PST CYLINDER COVER	Year/Month 2020/01

KeyNo.	Part Number	Part Name	Quantity	Other
1	FE86040000A	SAFETY COVER, TIE ROD	2	
2	26013-080202	Bolt, Hexa (8-20)	8	

FIG 078. Branson 2400	TIE ROD	Year/Month 2020/01

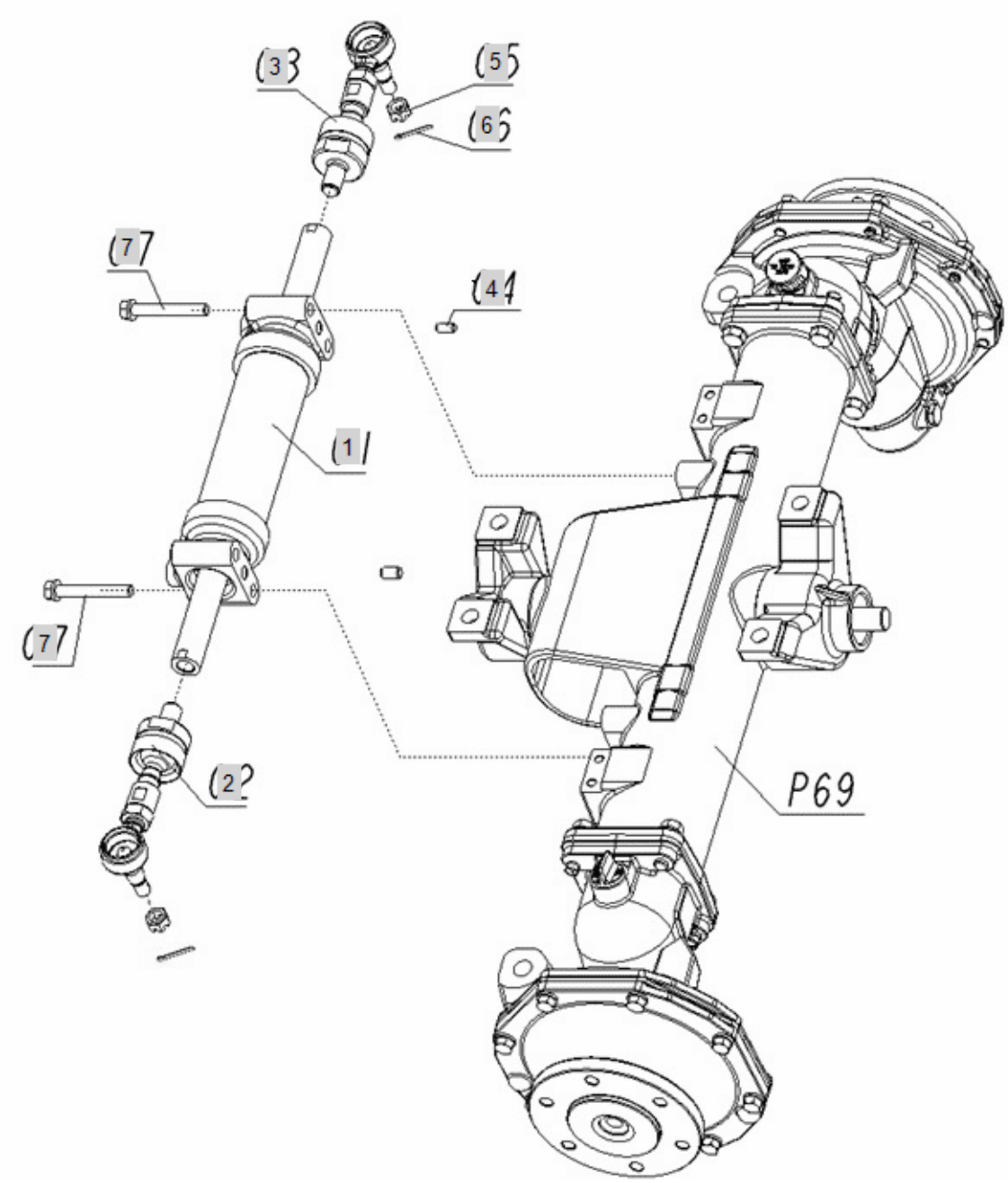

FIG 078. Branson 2400	TIE ROD	Year/Month 2020/01

KeyNo.	Part Number	Part Name	Quantity	Other
1	FE86010000A	CYLINDER ASS'Y, PST	1	
2	FE86020000B	TIE ROD ASSY LH	1	
3	FE86030000B	TIE ROD ASSY RH	1	
4	22312-100140	PIN,STRAIGHT	2	
5	26877-120002	CASTLENUT12	2	
6	22417-300250	PIN , COTTER (3-25)	2	
7	26013-100702	HEX BOLT W/WASHER	4	

FIG 079. Branson 2400	STEERING WHEEL	Year/Month 2020/01

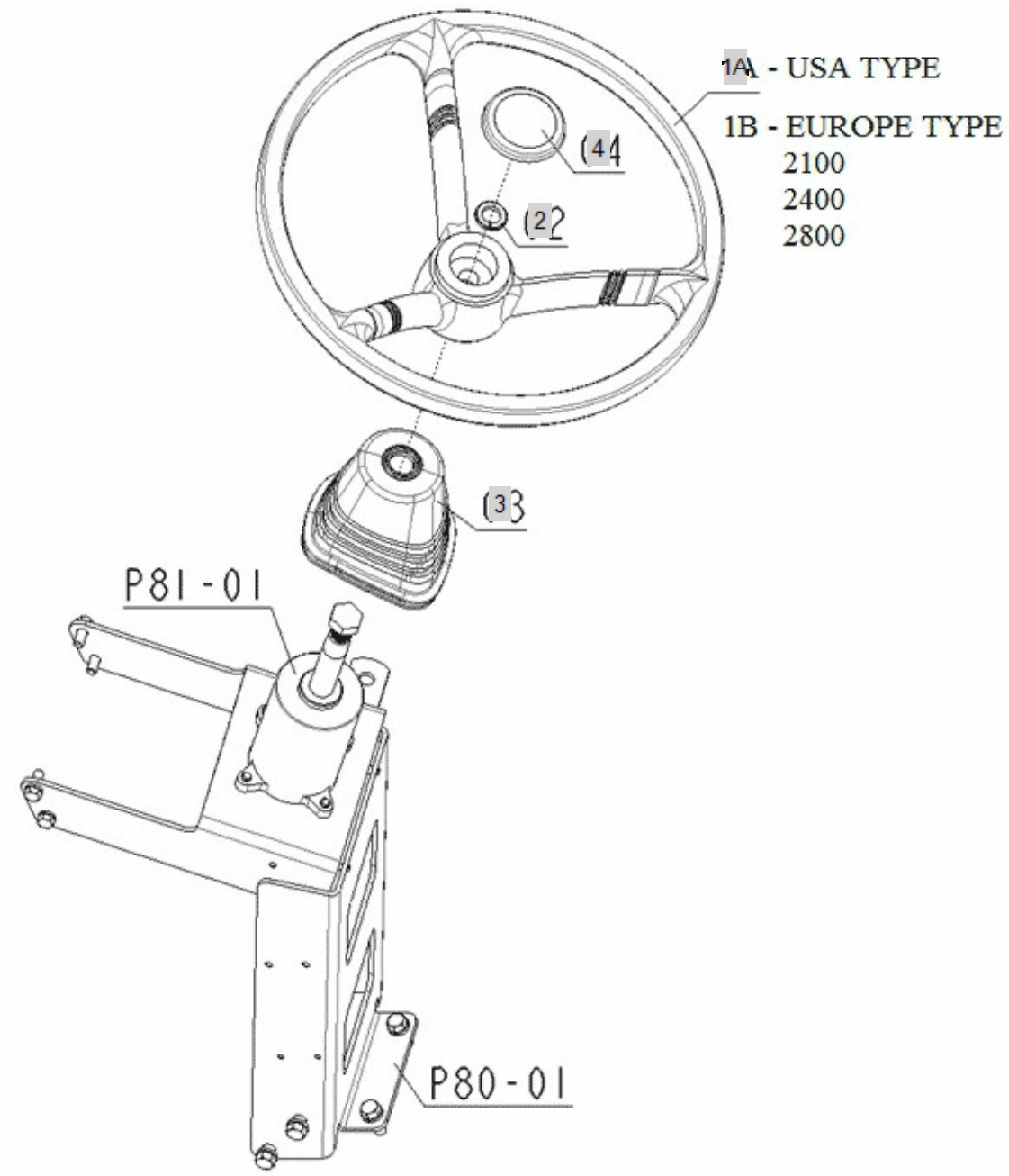

FIG 079. Branson 2400	STEERING WHEEL	Year/Month 2020/01

KeyNo.	Part Number	Part Name	Quantity	Other
1A	TZ29030000A1	STEERING WHEEL	1	
2	22217-160000	WASHER, SPRING (Φ 16)	1	
3	FE87030000A	BOOT,STEARING	1	
4	TA00026432A	STEERING WHEEL CAP (BRANSON)	1	

FIG 080.	STEERING POST	Year/Month
Branson 2400		2020/01

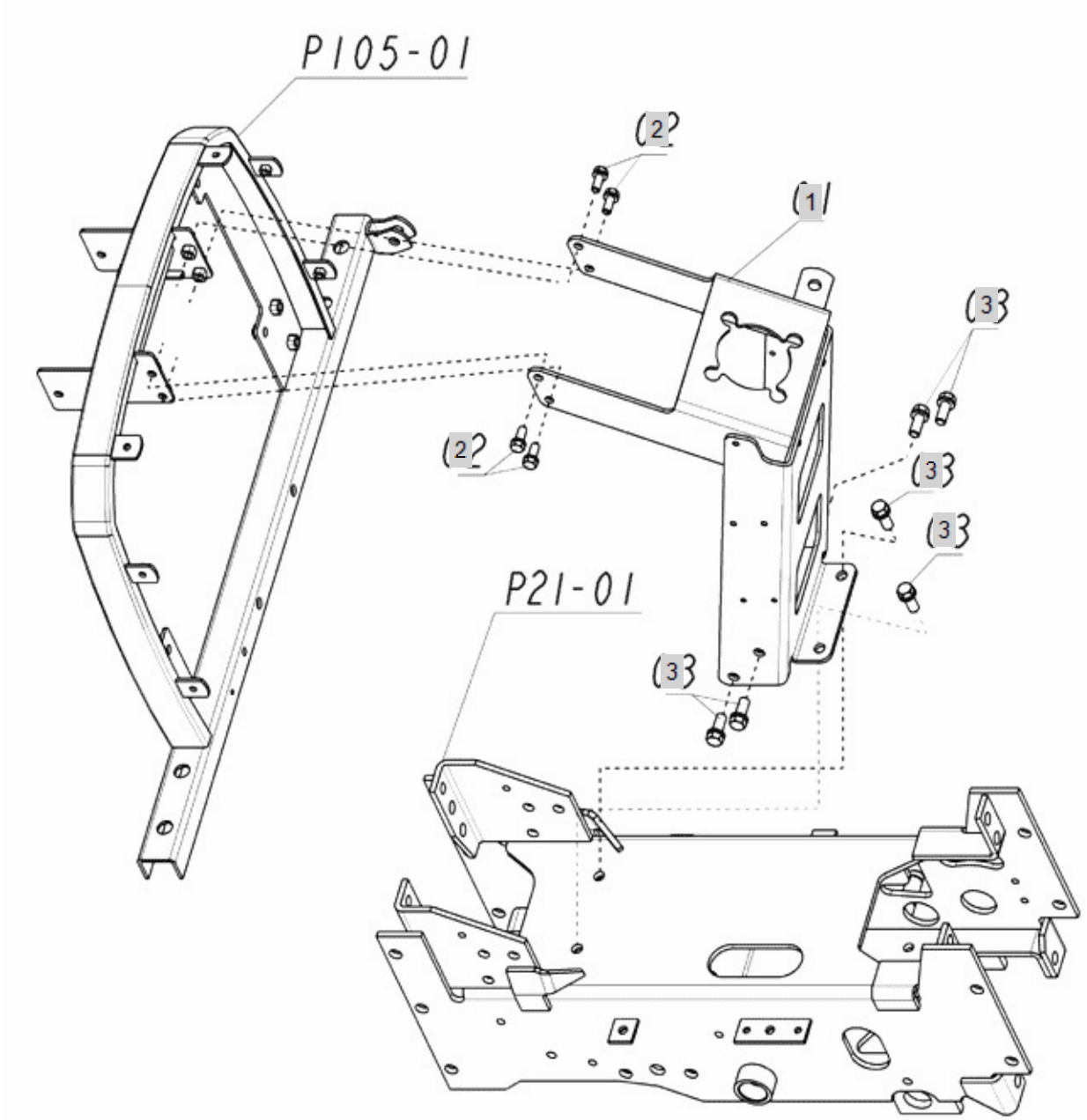

FIG 080. Branson 2400	STEERING POST	Year/Month 2020/01

KeyNo.	Part Number	Part Name	Quantity	Other
1	FE88010000C	POST, STEERING	1	
2	26013-080202	Bolt, Hexa (8-20)	4	
3	26106-100252	SCREW,HEXFLANGEHEADCAP	6	

FIG 081 Branson 2400	HYDRAULIC STEERING VALVE	Year/Month 2020/01

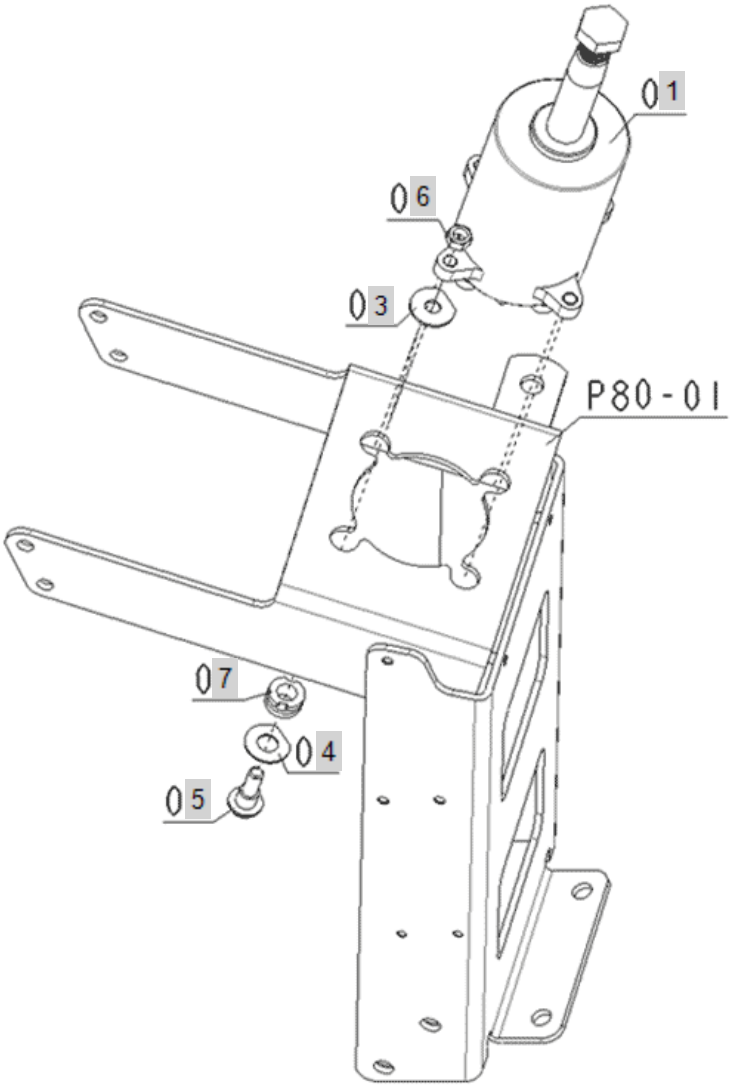

FIG 081 Branson 2400	HYDRAULIC STEERING VALVE	Year/Month 2020/01

KeyNo.	Part Number	Part Name	Quantity	Other
1	FE89010000A	POWER STEERING UNIT	1	
3	TA00016425A	PLAIN WASHER 8.5X21X1.6	4	
4	TA00016426A	PLAIN WASHER 11.5X21X1.6	4	
5	TA00016566A	PST BOLT	4	
6	26716-080002	NUT,HEX (D8)	4	
7	FEB6050000A	CUSHION	4PST UNIT	

FIG 082. Branson 2400	HYDRAULIC PUMP	Year/Month 2020/01

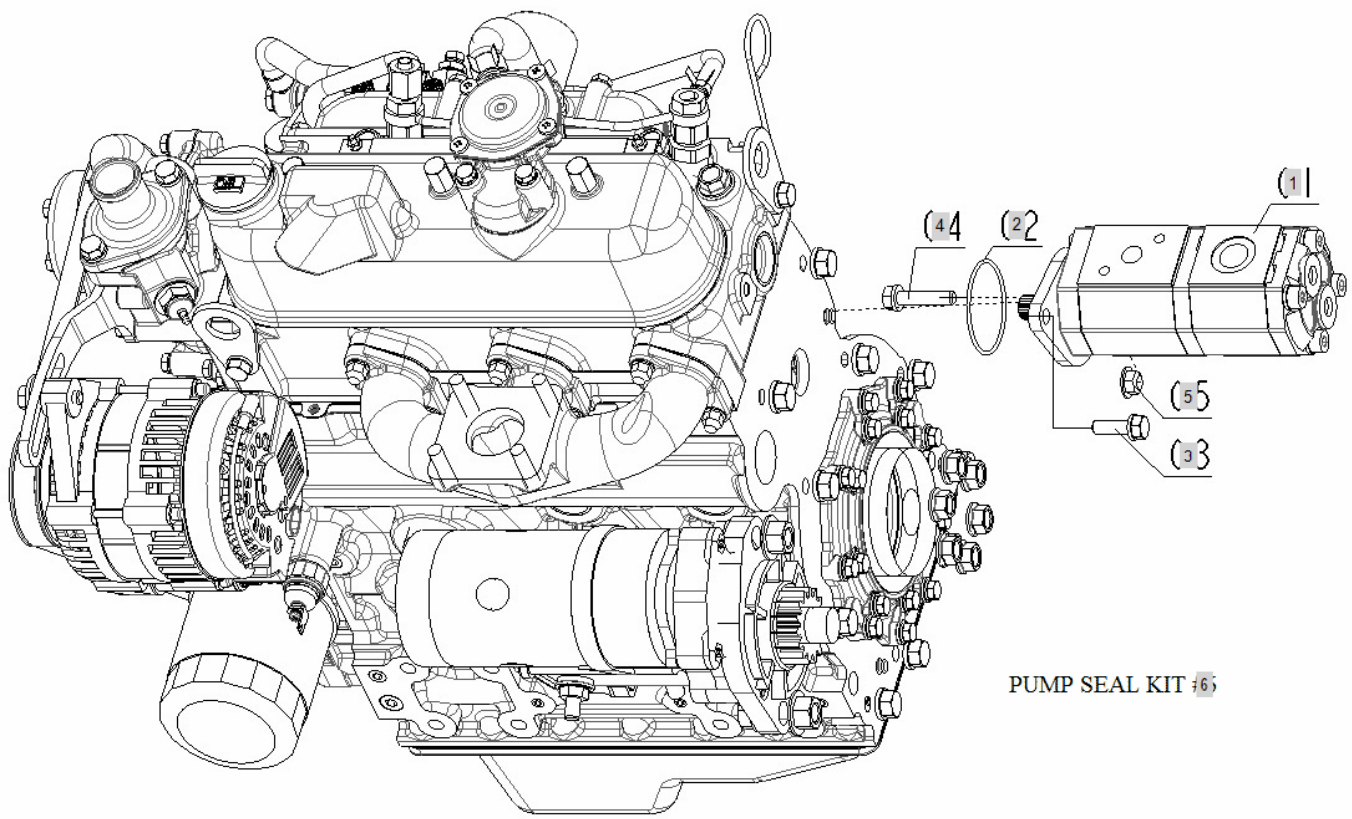

FIG 082. Branson 2400	HYDRAULIC PUMP	Year/Month 2020/01

KeyNo.	Part Number	Part Name	Quantity	Other
1	FE90010000A	PUMP ASS'Y,HYDRAULIC	1	
2	24341-000500	O-RING, FIX (Φ50)	1	
3	26013-080252	Bolt, Hexa (8-25)	1	
4	26013-080352	SCREW,CAPTIVEWASHERCAP	1	
5	26366-080002	Nut, Hexa (Φ8)	1	
6	TA00022018A	FE9001 SEAL KIT		

FIG 083A Branson 2400	HYDRAULIC OIL LINE _2400(h)	Year/Month 2020/01

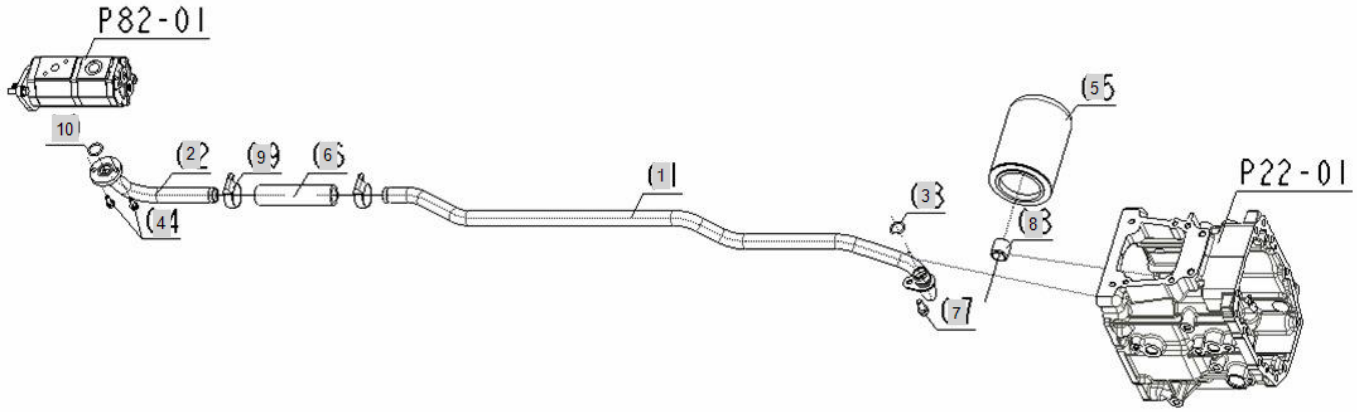

FIG 083A Branson 2400	HYDRAULIC OIL LINE _2400(h)	Year/Month 2020/01

KeyNo.	Part Number	Part Name	Quantity	Other
1	FE91010000C	PIPE, SUCTION	1	
2	FE91020000A	Pipe, Suction (Oil Pump)	1	
3	24311-000200	O-RING, DYNAMIC (Φ20)	1	
4	26012-060169	BOLT	2	
5	FE91050000A	FILTER,HYDRAULIC OIL (00S)	1	
6	FE91060000A	HOSE	1	
7	26013-080202	Bolt, Hexa (8-20)	1	
8	RN24110000A4	SCREW, CONNECTING	1	
9	23000-035000	HOSECLAMP	2	
10	24311-000200	O-RING, DYNAMIC (Φ20)	1	

FIG 084A Branson 2400	HYDRAULIC OIL LINE _2400	Year/Month 2020/01

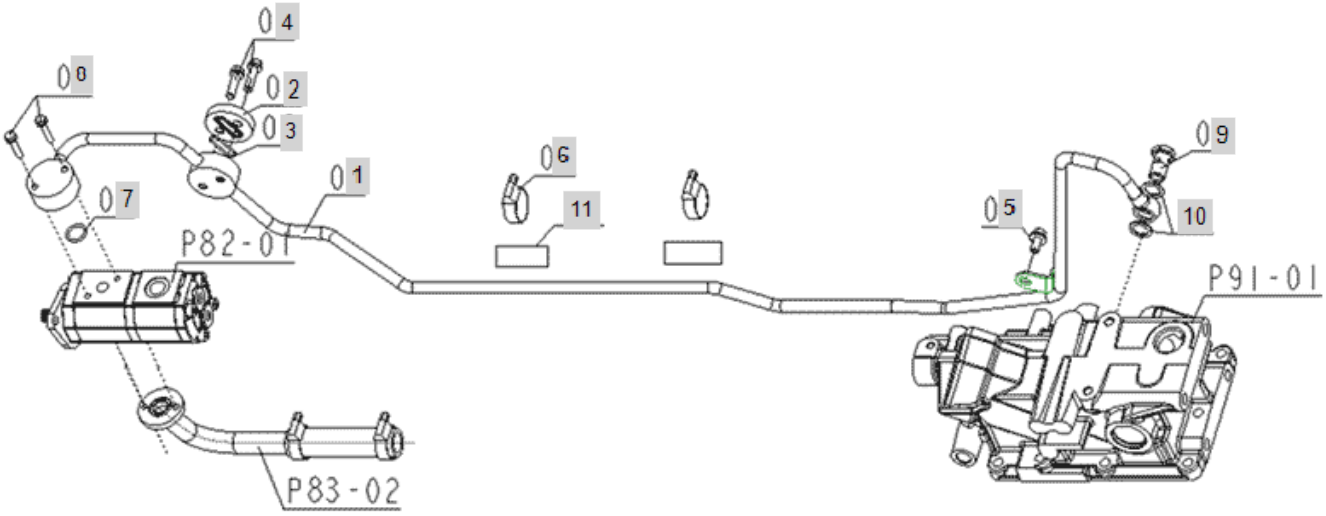

FIG 084A Branson 2400	HYDRAULIC OIL LINE _2400	Year/Month 2020/01

KeyNo.	Part Number	Part Name	Quantity	Other
1	FE92010000A	PIPE,EXHAUST	1	
2	FE92020000B	CAP	1	
3	FE92030000A	O RING	1	
4	26013-080302	HEX BOLT W/WASHER	2	
5	26014-080202	Bolt, Hexa (8-20)	1	
6	23000-035000	HOSECLAMP	2	
7	24311-000200	O-RING, DYNAMIC (Φ20)	1	
8	26013-060322	BOLT	2	
9	TCC9020000A4	Bolt, (d=16mm)	1	
10	23414-160000	WASHER,SEALING	2	
11	TA00016619A	PAD	2	

FIG 085A Branson 2400	HYDRAULIC STEERING LINE	Year/Month 2020/01

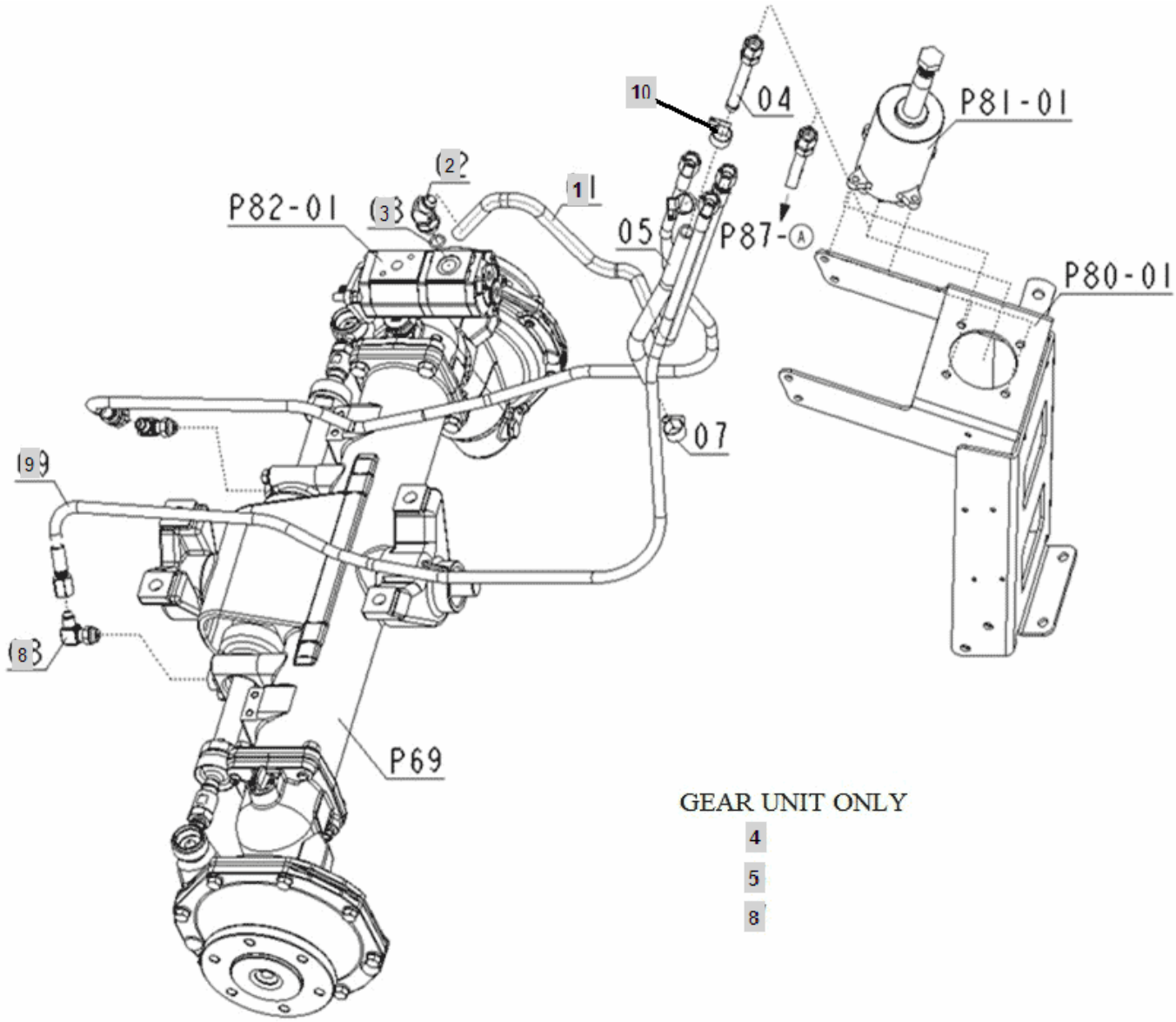

FIG 085A Branson 2400	HYDRAULIC STEERING LINE	Year/Month 2020/01

KeyNo.	Part Number	Part Name	Quantity	Other
1	FE93010000B	PIPE, DELIVERY	1	
2	FT33060000A4	45ELBOW[3/8]	1	
3	24311-000140	O-RING, DYNAMIC (Φ14)	1	
4	FE93040000B	PIPE	1	
5	FE93050000B	HOSE A, RETURN RUBBER	1	
7	23000-022000	CLAMP,HOSE	2	
8	RRA4220000A4	ELBOW, L-TYPE W/LOCKNUT	2	
9	FE93090000A	PST HOSE	2	
10	TA00003081A	CLIP	2	

FIG 088A Branson 2400	HYDRAULIC OIL LINE (F/M)	Year/Month 2020/01

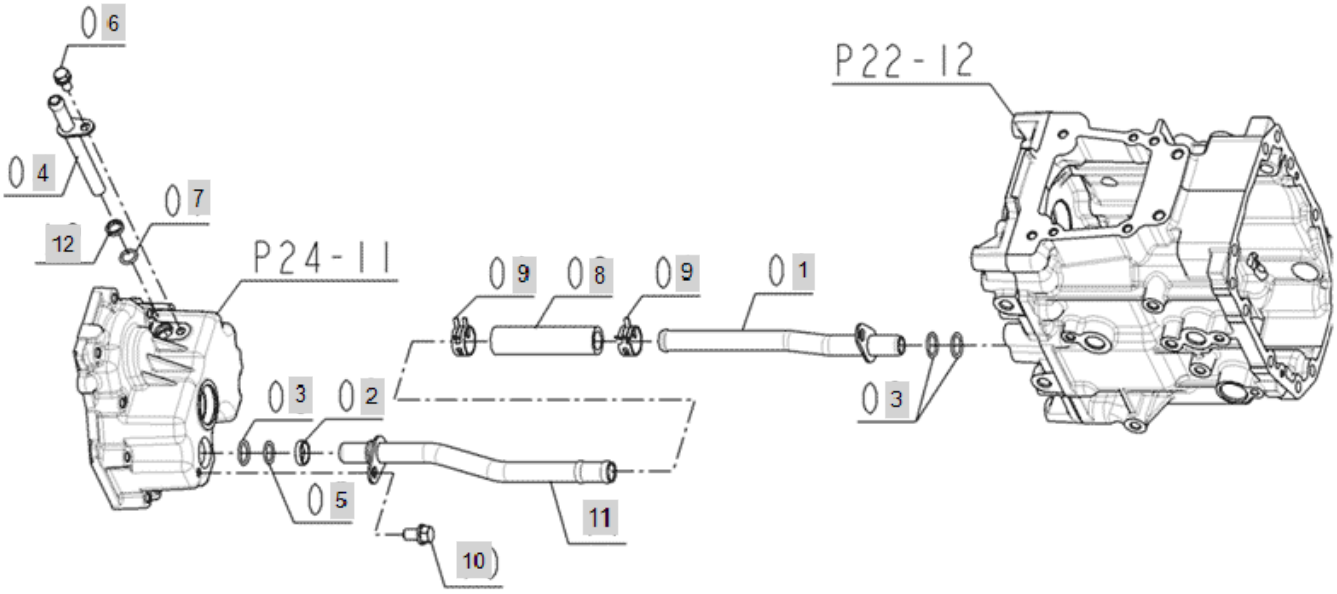

FIG 088A Branson 2400	HYDRAULIC OIL LINE (F/M)	Year/Month 2020/01

KeyNo.	Part Number	Part Name	Quantity	Other
1	FE96010000B	PIPE, CLUTCH HOUSING-TM	1	
2	FE96020000A	RING	1	
3	24311-000180	O-RING, DYNAMIC (Φ18)	3	
4	TA00016863A	RETURN PIPE	1	
5	24311-000160	O-RING, DYNAMIC (Φ16)	1	
6	26013-080162	Bolt, Hexa (8-16)	1	
7	24311-000120	O-RING, DYNAMIC (Φ12)	1	
8	TA00017667A	HOSE(CLUTCH-MISSION)	1	
9	TA00016988A	HOSE CLAMP 24	2	
10	26013-080162	Bolt, Hexa (8-16)	1	
11	TA00003097A	PIPE(HST)	1	
12	TA00020843B	COLLAR	1	

FIG 090A-1 Branson 2400	HYDRAULIC CYLINDER	Year/Month 2020/01

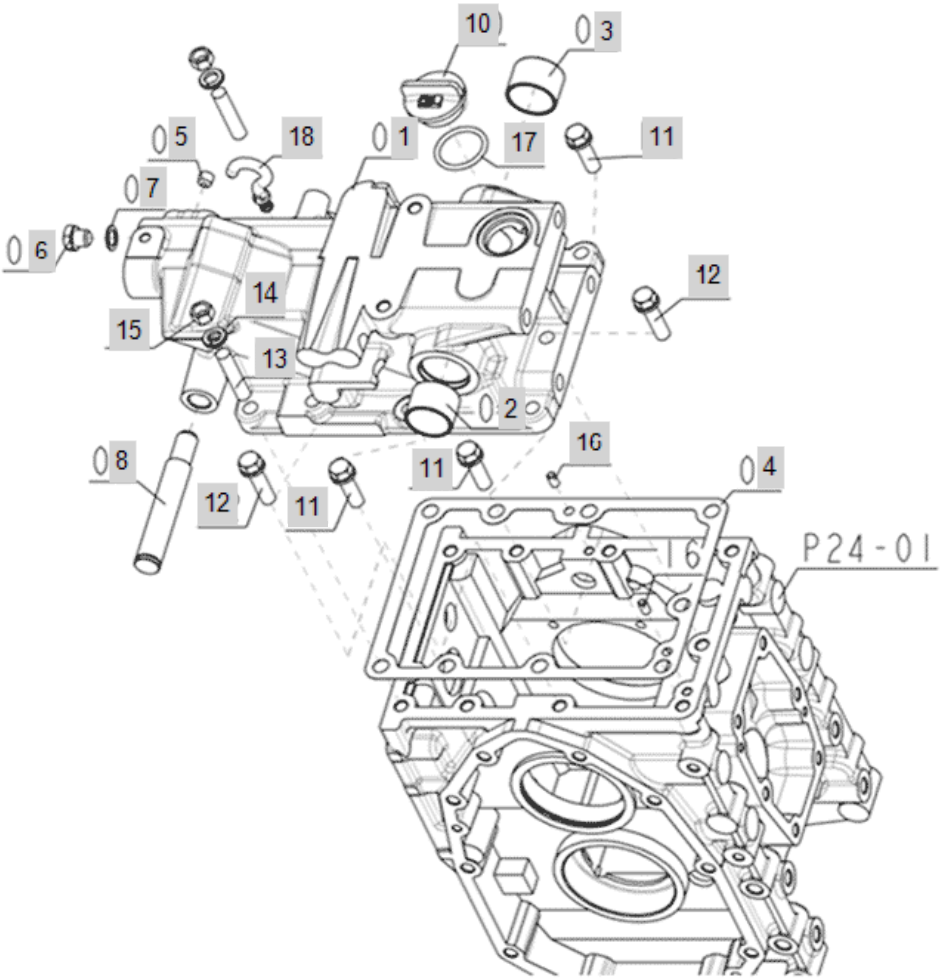

FIG 090A-1 Branson 2400	HYDRAULIC CYLINDER	Year/Month 2020/01

KeyNo.	Part Number	Part Name	Quantity	Other
1	FE98010000F	ASS'Y CASE, CYLINDER	1	
2	TA00022682B	BUSH 34X41X25	1	
3	TA00022683A	BUSH 38X42X20	1	
4	FE98040000C	PACKING,CYLINDER CASE	1	
5	23871-010000	PLUG	1	
6	23887-120002	BOLT	1	
7	23414-120000	WASHER, PLAIN (Φ 12)	1	
8	FE98070000A	shaft	1	
10	HC03470000B4	CAP,FILTER	2	
11	26013-100352	Bolt, Hexa (10-35)	5	
12	26013-100402	Bolt, Hexa (10-40)	2	
13	26216-100352	BOLT	2	
14	22217-100000	WASHER, SPRING (Φ 10)	2	
15	26712-100002	HEX NUT	2	
16	22312-060100	PIN, DOWEL (6-10)	2	
17	24311-000320	O-RING, DYNAMIC (Φ32)	1	
18	TA00019614A	CAP	1	

FIG 090A-2 Branson 2400	HYDRAULIC CYLINDER(2017.07)	Year/Month 2020/01

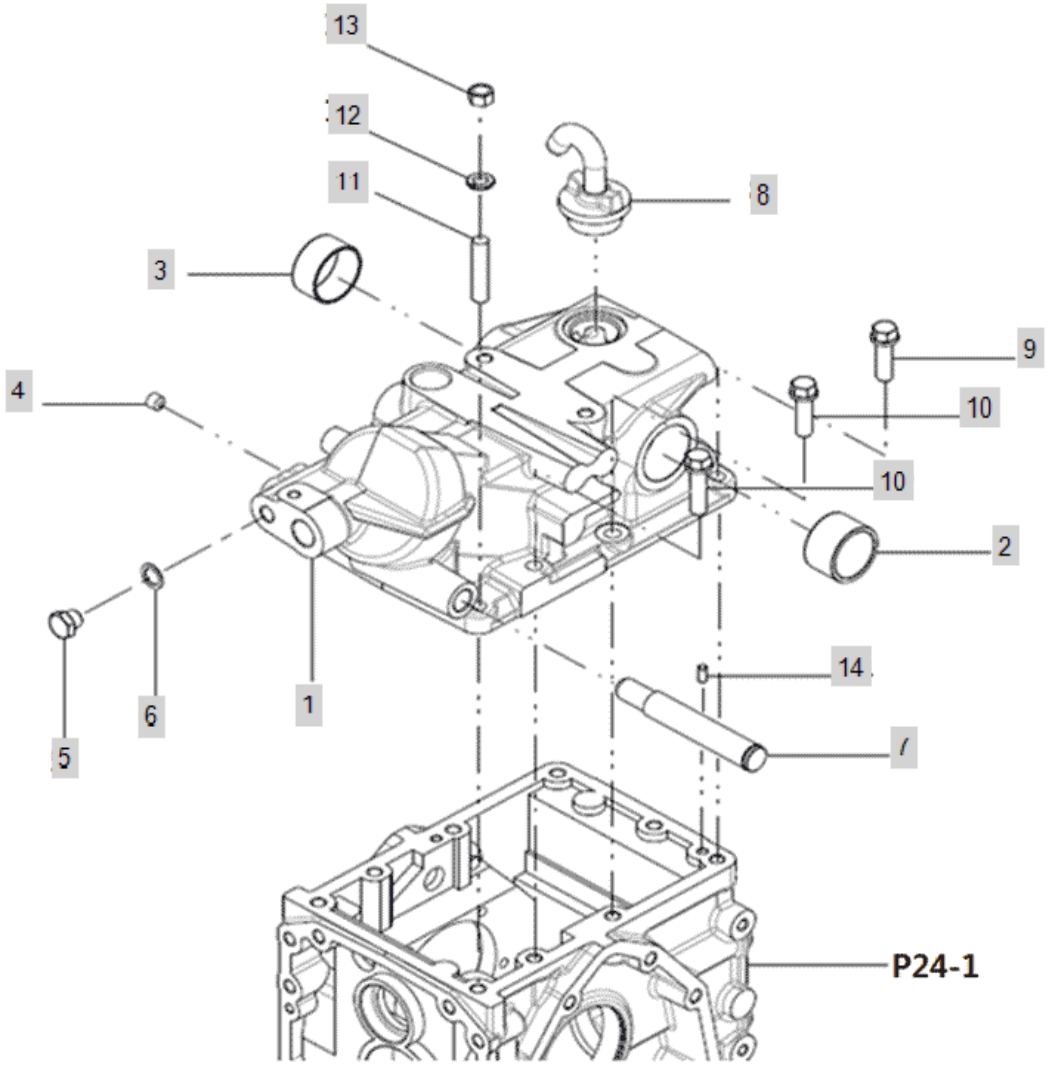

FIG 090A-2 Branson 2400	HYDRAULIC CYLINDER(2017.07)	Year/Month 2020/01

KeyNo.	Part Number	Part Name	Quantity	Other
1	FE98010000F	ASS'Y CASE, CYLINDER	1	
2	TA00022682B	BUSH 34X41X25	1	
3	TA00022683A	BUSH 38X42X20	1	
4	23871-010000	PLUG	1	
5	23887-120002	BOLT	1	
6	23414-120000	WASHER, PLAIN (Φ 12)	1	
7	FE98070000A	shaft	1	
8	FT80370000A4	CAP,INTAKE	1	
9	26013-100352	Bolt, Hexa (10-35)	5	
10	26013-100402	Bolt, Hexa (10-40)	2	
11	26216-100352	BOLT	2	
12	22217-100000	WASHER, SPRING (Φ 10)	2	
13	26712-100002	HEX NUT	2	
14	22312-060100	PIN, DOWEL (6-10)	2	

FIG 092 Branson 2400	HYDRAULIC PISTON / LIFT ARM	Year/Month 2020/01

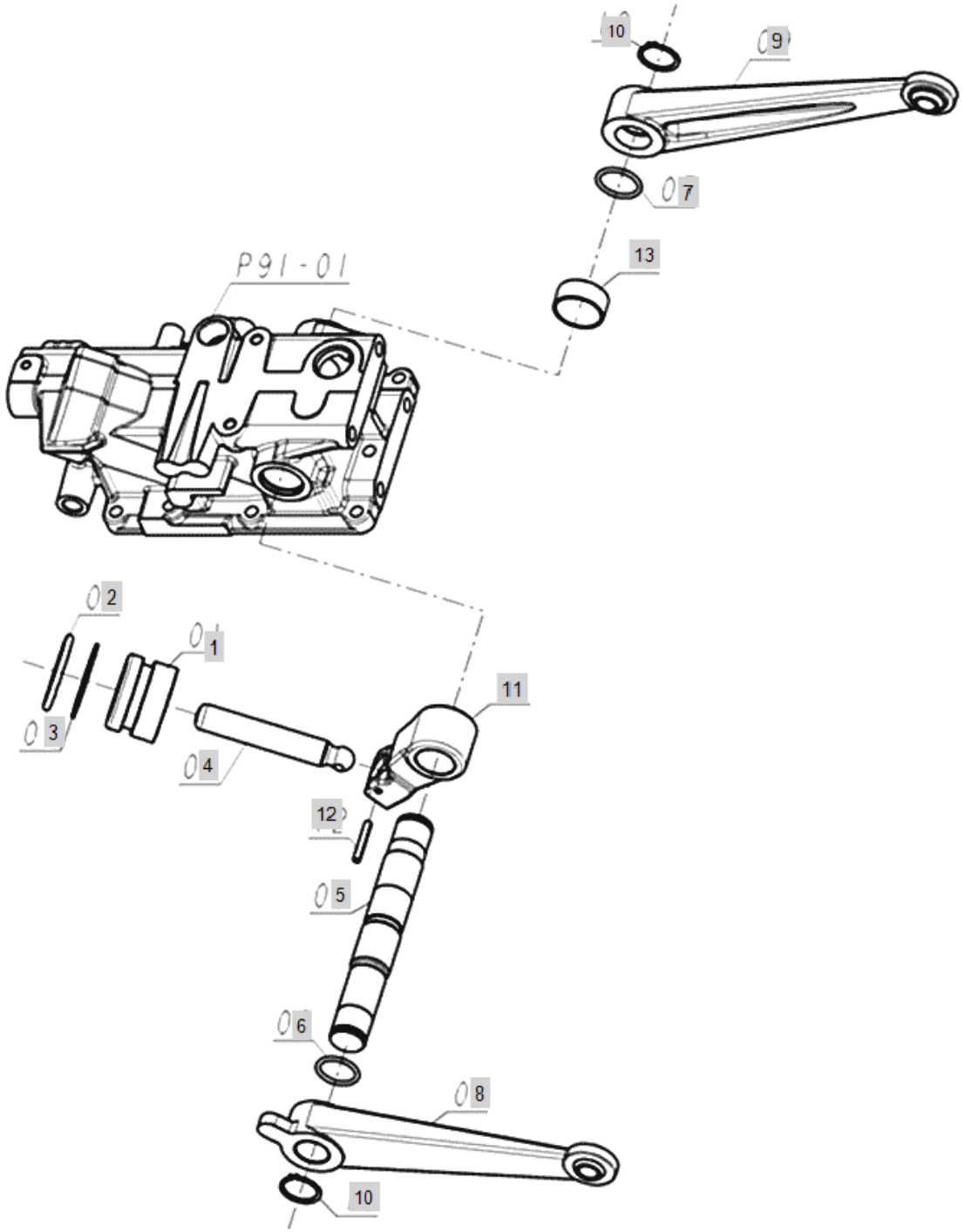

FIG 092 Branson 2400	HYDRAULIC PISTON / LIFT ARM	Year/Month 2020/01

KeyNo.	Part Number	Part Name	Quantity	Other
1	TA00022494A	PISTON -> TA00022494B	1	
2	TA00022680A	O-RING, HYD PISTON	1	
3	TA00022681A	BACK UP RING	1	
4	TA00022679A	ROD, HYD. PISTON	1	
5	TA00022493C	SHAFT, HYD. ARM	1	
6	TA00035991A	O RING	1	
7	24311-000380	O-RING, DYNAMIC (Φ38)	1	
8	TA00022496B	LIFT ARM_L	1	
9	TA00022497B	LIFT ARM_R	1	
10	22242-000320	SNAP RING, SHAFT (Φ 32)	2	
11	TA00022966A	ARM, HYDRAULIC	1	
12	22351-060040	PIN, SPRING (6-40)	1	
13	TA00050297A	COLLAR	1	

FIG 093A Branson 2400	FEED BACK LEVER	Year/Month 2020/01

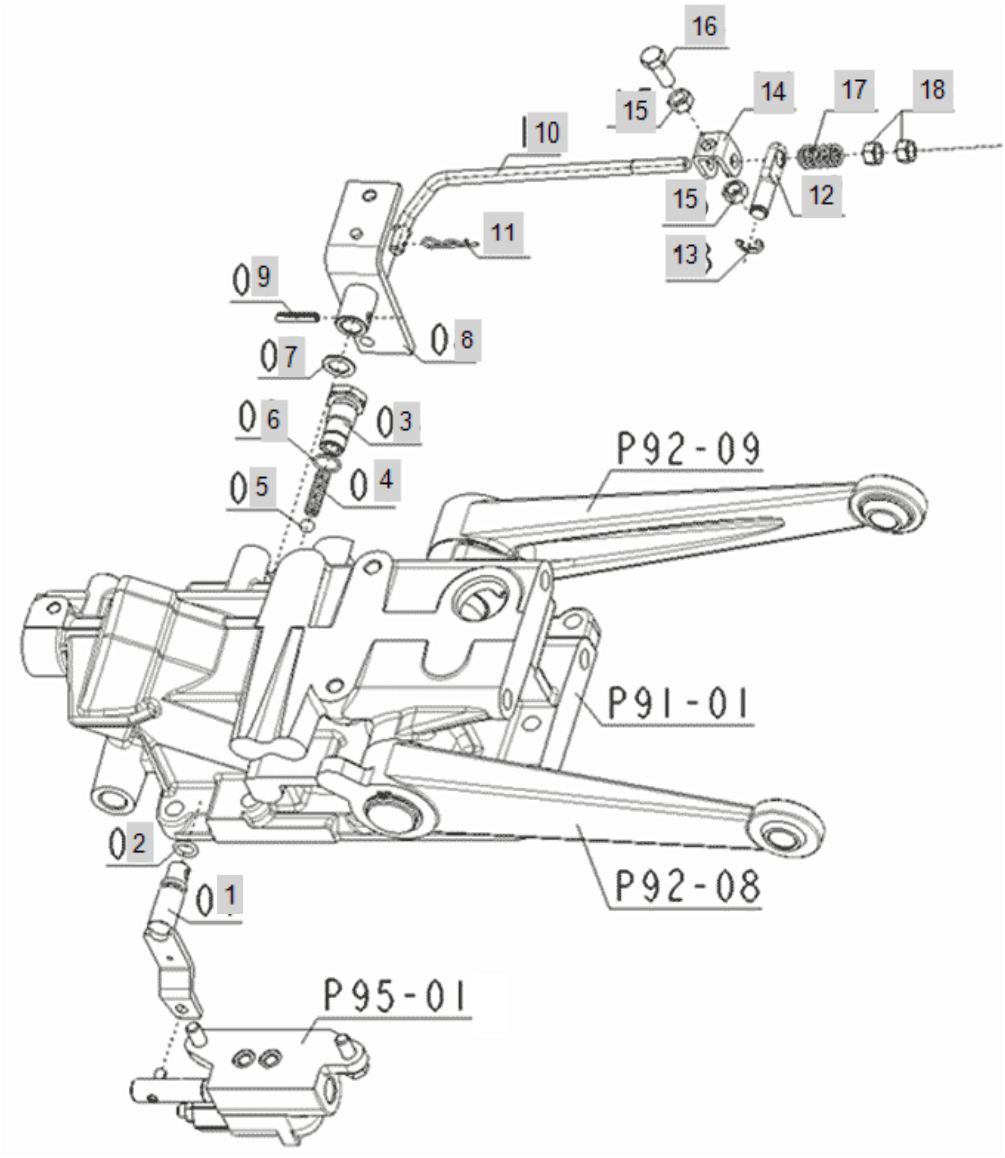

FIG 093A Branson 2400	FEED BACK LEVER	Year/Month 2020/01

KeyNo.	Part Number	Part Name	Quantity	Other
1	FEA0010000B	SHAFT, CONTROL LEVER	1	
2	24311-000110	O-RING, DYNAMIC (Φ11)	1	
3	FEA0030000A	PULG	1	
4	FEA0040000A	SPRING	1	
5	24190-100001	Ball, Steel (5/16)	1	
6	24341-000140	O-RING, FIX (Φ14)	1	
7	FEA0070000A	COLLAR, ARM HYD	1	
8	FEA0080000B	ARM, CONTROL LEVER	1	
9	22351-050025	PIN, SPRING (5-02)	1	
10	FEA0100000B	ROD, PEED BACK	1	
11	22360-080000	PIN , SNAP (8Φ)	1	
12	FEA0120000A	PIN, FEED BACK	1	
13	22272-000080	RING, CIRCLIP (Φ 08)	1	
14	FEA0140000A	INTERLOCKER	1	
15	26712-080002	HEX NUT	2	
16	26116-080222	BOLT7T(8X22)	1	
17	FEA0170000A	SPRING, FIEEDBACK	1	
18	26712-080002	HEX NUT	2	

FIG 095A Branson 2400	CONTROL VALV	Year/Month 2020/01

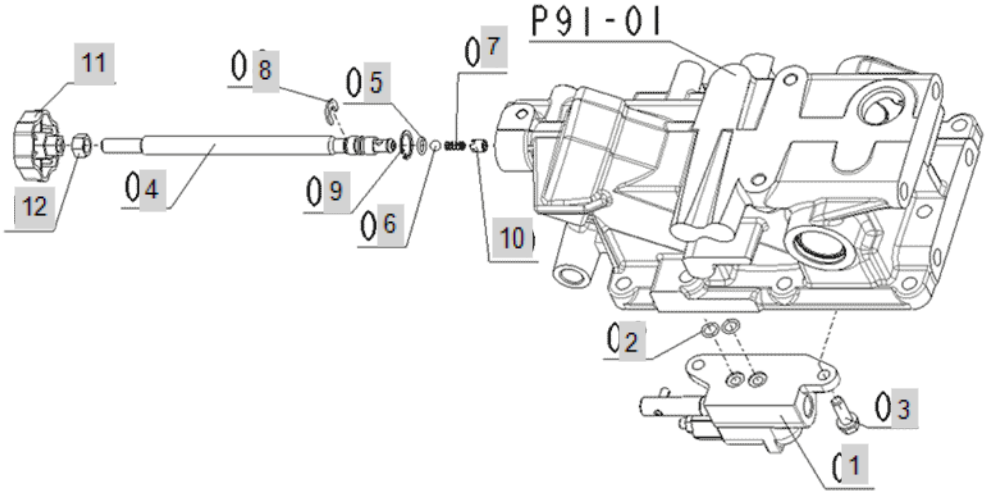

FIG 095A Branson 2400	CONTROL VALV	Year/Month 2020/01

KeyNo.	Part Number	Part Name	Quantity	Other
1	FEA1010000B	CONTROL VALVE ASSY	1	
2	24311-000100	O-RING, DYNAMIC (Φ10)	2	
3	26013-080252	Bolt, Hexa (8-25)	2	
4	FEA1040000B	SHAFT, HYD. ADJUST	1	
5	24311-000100	O-RING, DYNAMIC (Φ10)	1	
6	24190-090001	SGEELBALL9/32	1	
7	FEA1070000A	SPRING	1	
8	FEA1080000A	STOPPER	1	
9	22252-000190	RING, CIRCLIP (Φ 19)	1	
10	FEA1100000A	COLLAR	1	
11	TTA9040000A4	KNOB	1	
12	26716-100002	Nut, Hexa (Φ10)	1	

FIG 097. Branson 2400	LIFT LINK	Year/Month 2020/01

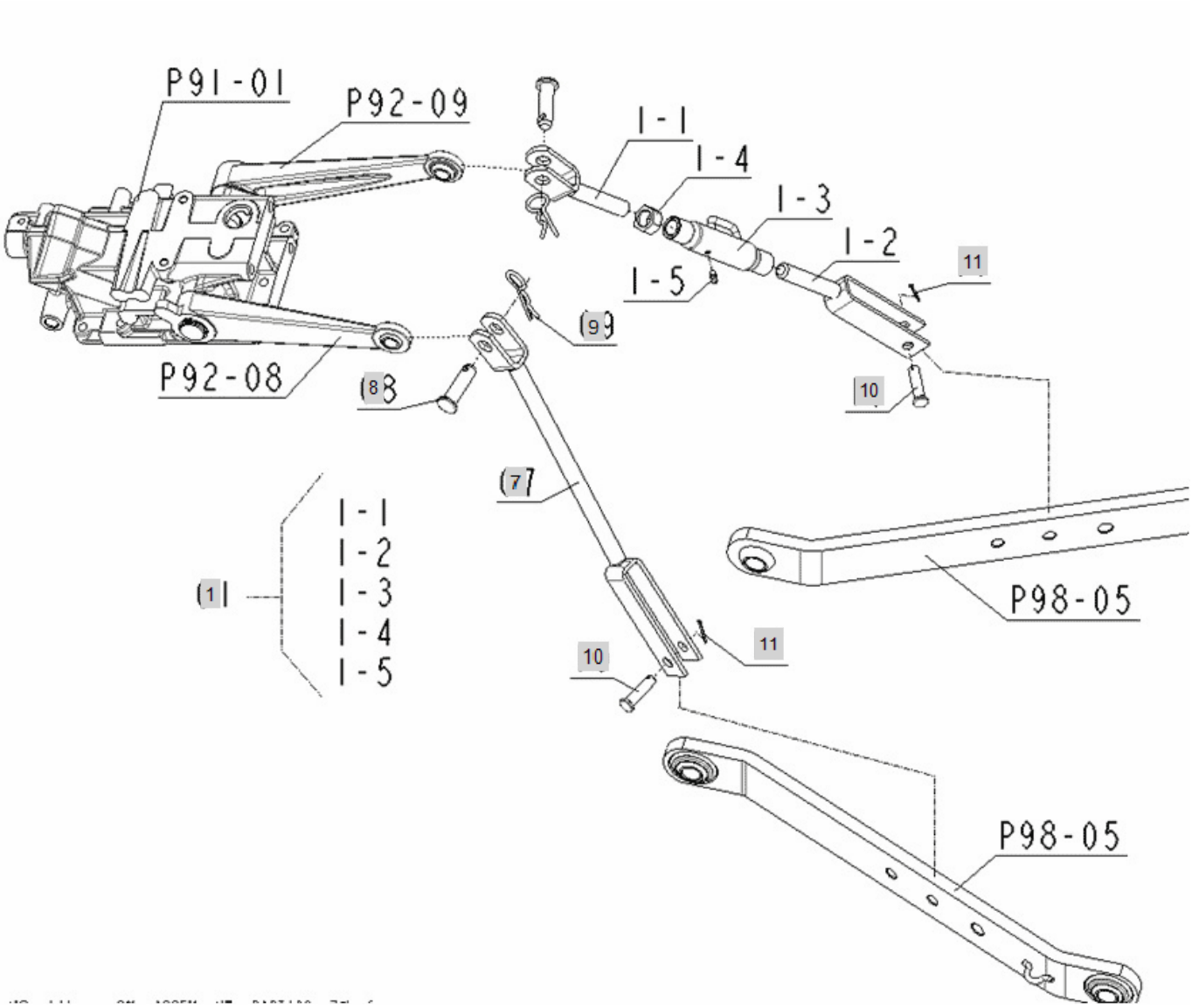

FIG 097. Branson 2400	LIFT LINK	Year/Month 2020/01

KeyNo.	Part Number	Part Name	Quantity	Other
1	FEA2010000A	ASS'Y ROD, LIFT RH	1	
7	FEA2070000A	ROD ASS'Y(L), LIFT	1	
8	TZE7300000A4	PIN,LIFTLINK	2	
9	TTE7010000A4	SNAPPIN	2	
10	22486-120350	PIN, HEAD (12-35)	2	
11	22417-250280	PIN , COTTER (2-28)	2	

FIG 098. Branson 2400	LIFT ARM	Year/Month 2020/01

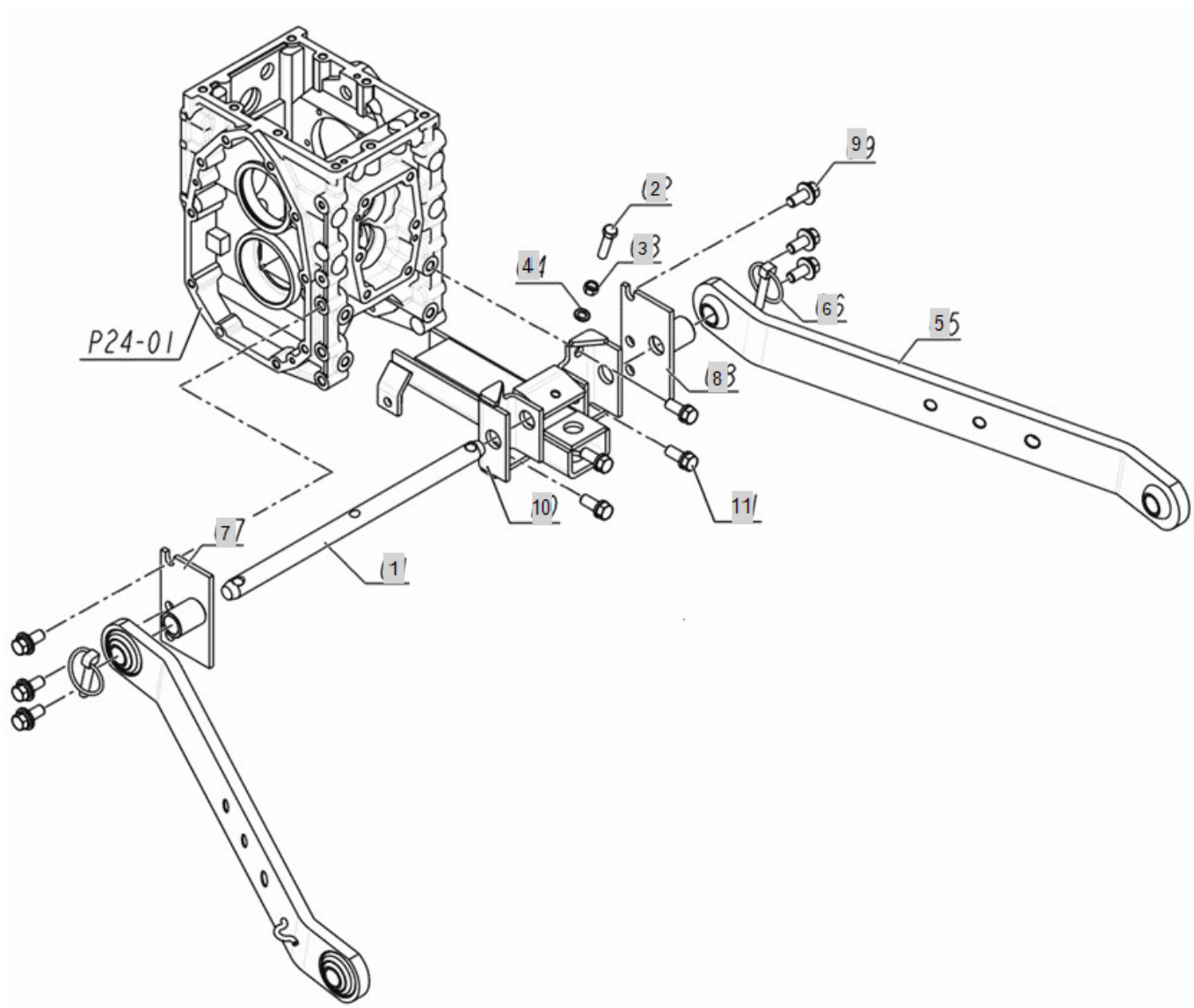

FIG 098. Branson 2400	LIFT ARM	Year/Month 2020/01

KeyNo.	Part Number	Part Name	Quantity	Other
1	FEA3010000B	PIN, LOWER LINK	1	
2	26156-100404	BOLT	1	
3	26716-100002	Nut, Hexa (Φ10)	1	
4	22217-100000	WASHER, SPRING (Φ 10)	1	
5	FEA3050000B	COMP. LINK, LOWER	2	
6	TB44030000B4	RING PIN ASSY	2	
7	TA00019170A	SPACER (LH)	1	
8	TA00019171A	SPACER (RH)	1	
9	26014-120302	BOLT	6	
10	FEA7010000B	HITCH FRAME(REAR)	1	
11	26013-120302	HEX BOLT W/WASHER	4	

FIG 099 Branson 2400	3-POINT LINKAGE(TOP LINK)	Year/Month 2020/01

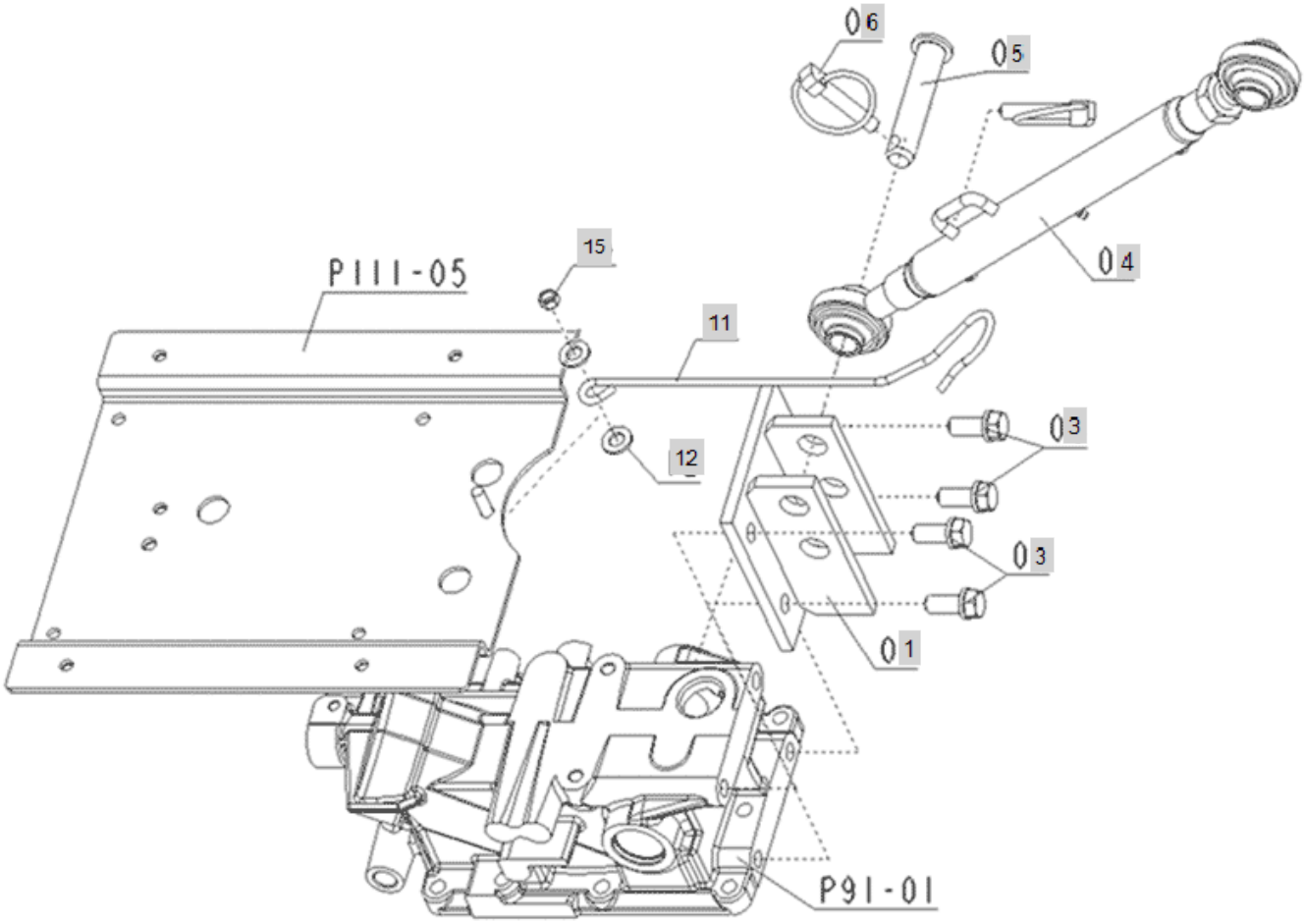

FIG 099 Branson 2400	3-POINT LINKAGE(TOP LINK)	Year/Month 2020/01

KeyNo.	Part Number	Part Name	Quantity	Other
1	FEA4010000A	BRACKET, TOP LINK LH	1	
3	26013-120302	HEX BOLT W/WASHER	4	
4	FEA4040000A	TOP LINK ASS'Y	1	
5	TTE6130000A4	PIN	1	
6	TJ30110000A4	RING PIN	2	
11	FEA4110000B	HOLDER,TOPLINK	1	
12	22157-100000	WASHER, PLAIN (Φ 10)	2	
15	26347-080002	Unut	1	

FIG 100A Branson 2400	CHECK CHAIN	Year/Month 2020/01

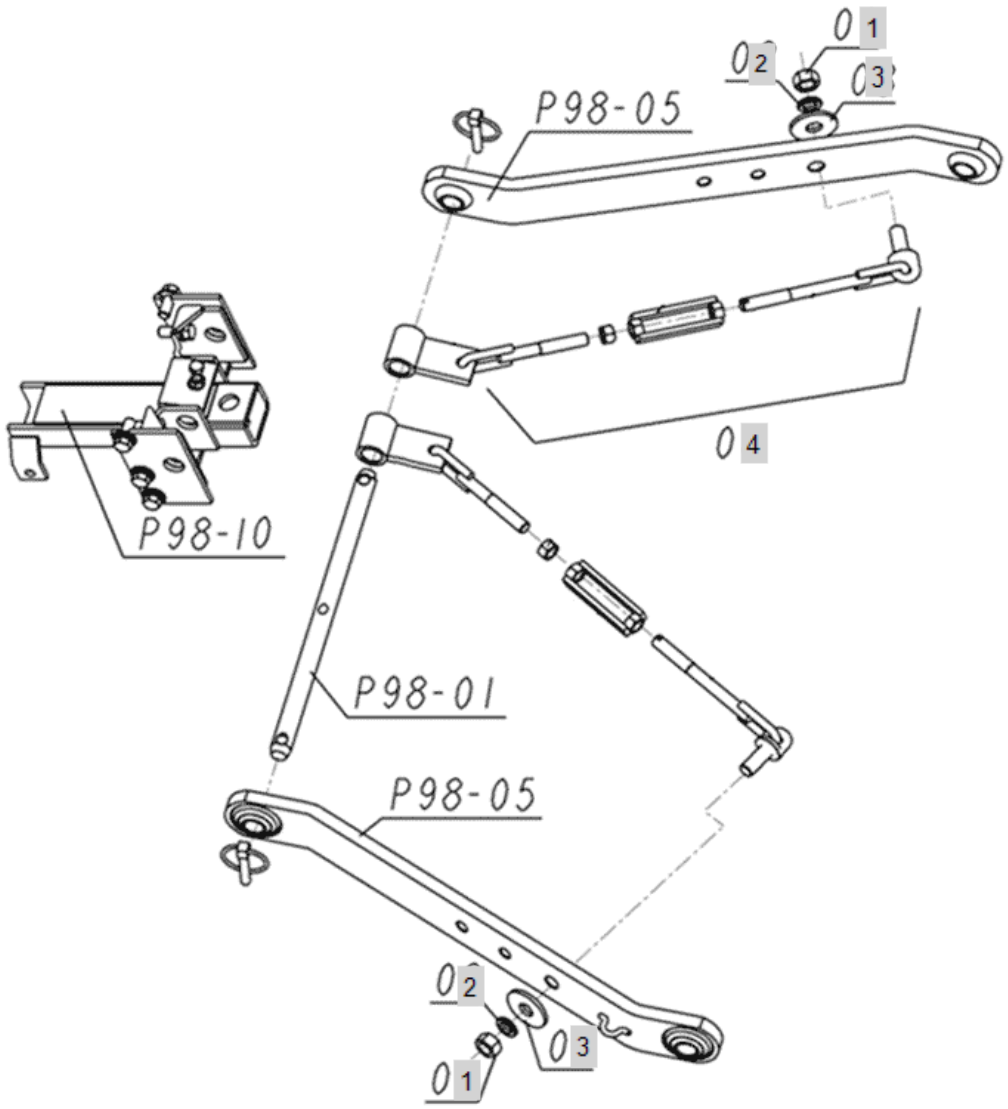

FIG 100A Branson 2400	CHECK CHAIN	Year/Month 2020/01

KeyNo.	Part Number	Part Name	Quantity	Other
1	FEA5010000C	STABILIZER LINK ASSY	2	
2	22217-160000	WASHER, SPRING (Φ 16)	2	
3	22157-160000	WASHER, PLAIN (Φ 16)	2	
4	FEA5010000E	CHECK CHANI SUB ASS'Y	2	

FIG 101. Branson 2400	DRAW BAR	Year/Month 2020/01

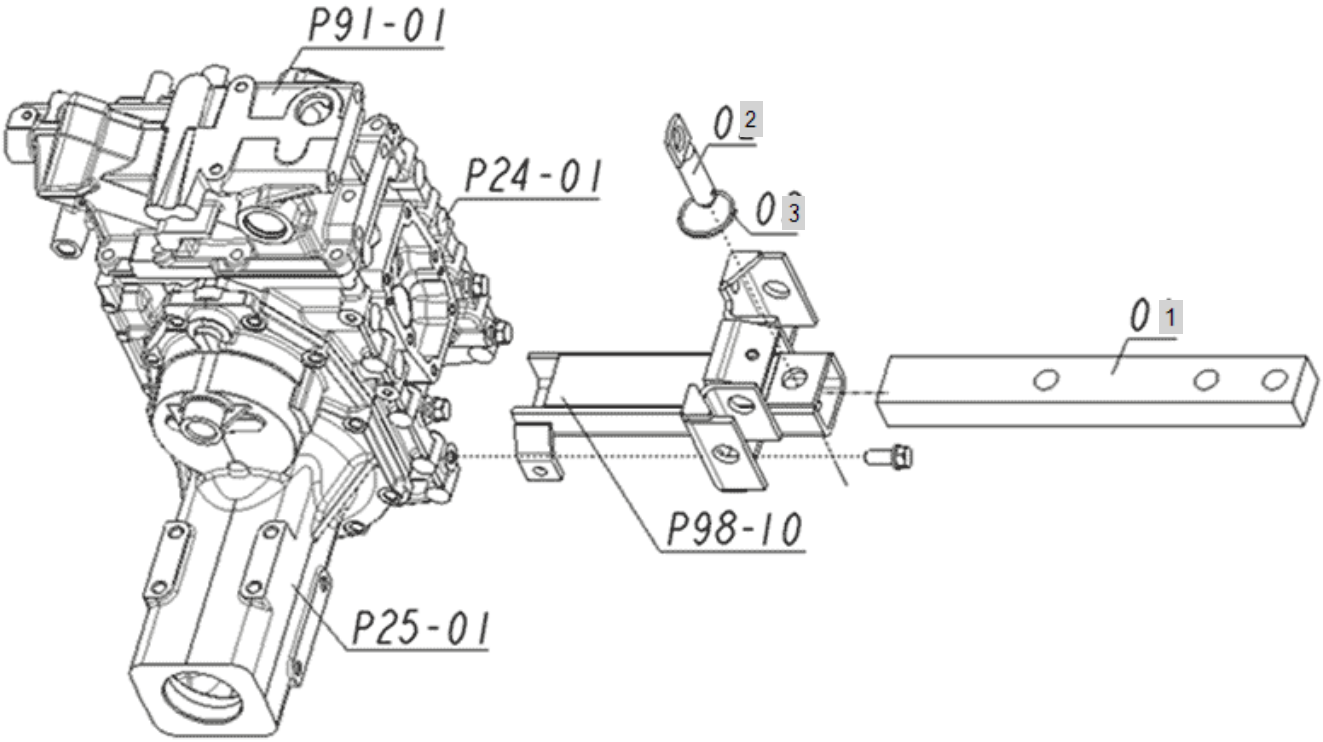

FIG 101. Branson 2400	DRAW BAR	Year/Month 2020/01

KeyNo.	Part Number	Part Name	Quantity	Other
1	FEA6010000A	DRAWBAR ASSY	1	
2	FEA6020000A	PIN	1	
3	TB46070000A4	RING	1	

FIG 102. Branson 2400	PTO SHEILD	Year/Month 2020/01

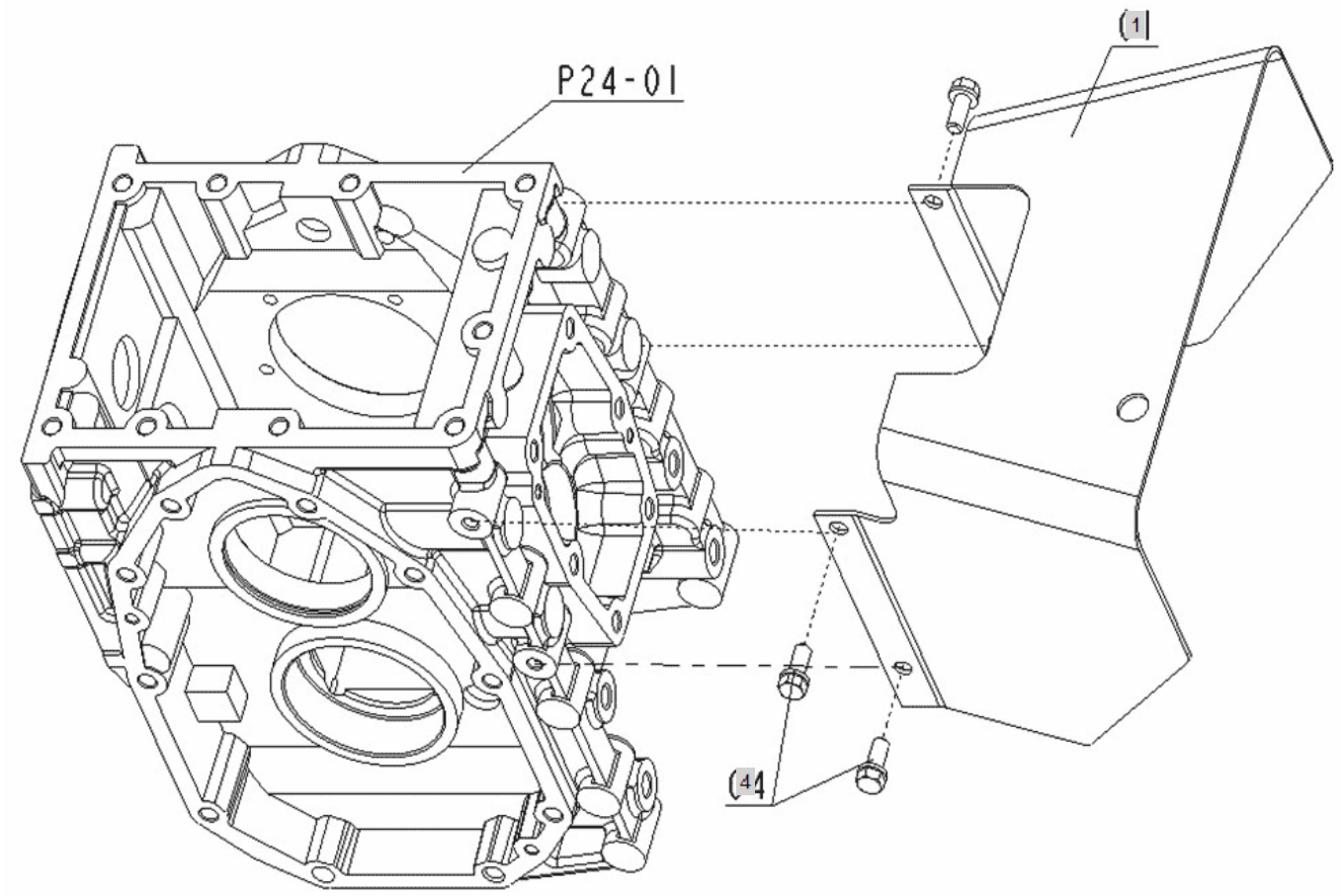

FIG 102. Branson 2400	PTO SHEILD	Year/Month 2020/01

KeyNo.	Part Number	Part Name	Quantity	Other
1	FEA8010000A	COVER, PTO	1	
4	26013-080202	Bolt, Hexa (8-20)	4	

FIG 103. Branson 2400	HOOD	Year/Month 2020/01

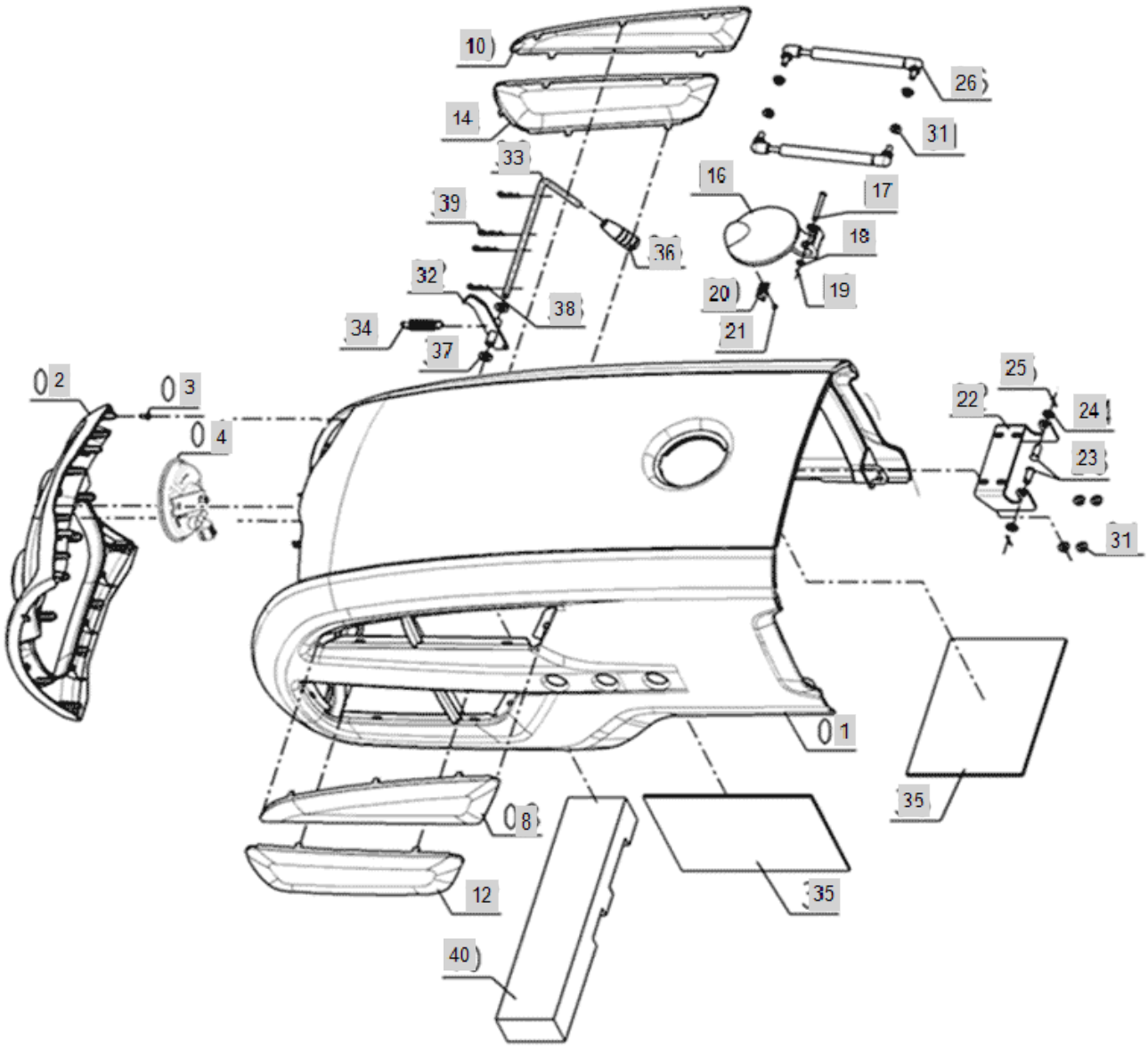

FIG 103. Branson 2400	HOOD	Year/Month 2020/01

KeyNo.	Part Number	Part Name	Quantity	Other
1	TA00040721A	BONNET FRAME ASS'Y	1	
2	TA00040935A	FRONT MASK ASS'Y	1	
3	TTD7090000A4	CROSSRECESSEDHEADTAPPINGSCREW	11	
4	HA00000929A	HORN	1	
8	FEB0050100B	COVER(L,U)	1	
10	FEB0060100B	COVER(R,U)	1	
12	FEB0070100B	COVER(L,D)	1	
14	FEB0080100B	COVER(R,D)	1	
16	FEB0090000A	COVER,FUEL FILLER	1	
17	22487-060500	PIN, HEAD (06-50)	1	
18	22127-060000	WASHER, PLAIN (Φ 06)	1	
19	22417-160120	PIN , COTTER (1-12)	1	
20	FEB0100000B	SPRING	1	
21	22587-350102	TAPPING SCREW	1	
22	FEB0110000B	HINGE,BONNET	1	
23	22487-100200	PIN, HEAD (10-20)	2	
24	22117-100000	WASHER, PLAIN (Φ 10)	2	
25	22417-200200	PIN , COTTER (2-20)	2	
26	FEB0120000A	GAS SPRING	2	
31	26366-080002	Nut, Hexa (Φ8)	8	
32	FEB0130000C	HOOK	1	
33	FEB0140000B	LEVER	1	
34	FEB0150000B	SPRING	1	
35	FTD6290000B	SPONGE	2	
36	VD05460000A4	LEVER(BLACK)	1	
37	22127-100000	WASHER, PLAIN (Φ 10)	2	
38	22360-100000	PIN , SNAP (10Φ)	2	
39	22360-120000	PIN , SNAP (2Φ)	2	
40	FEB0160000A	SPONGE, BONNET	1	

FIG 104. Branson 2400	PANEL COVER	Year/Month 2020/01

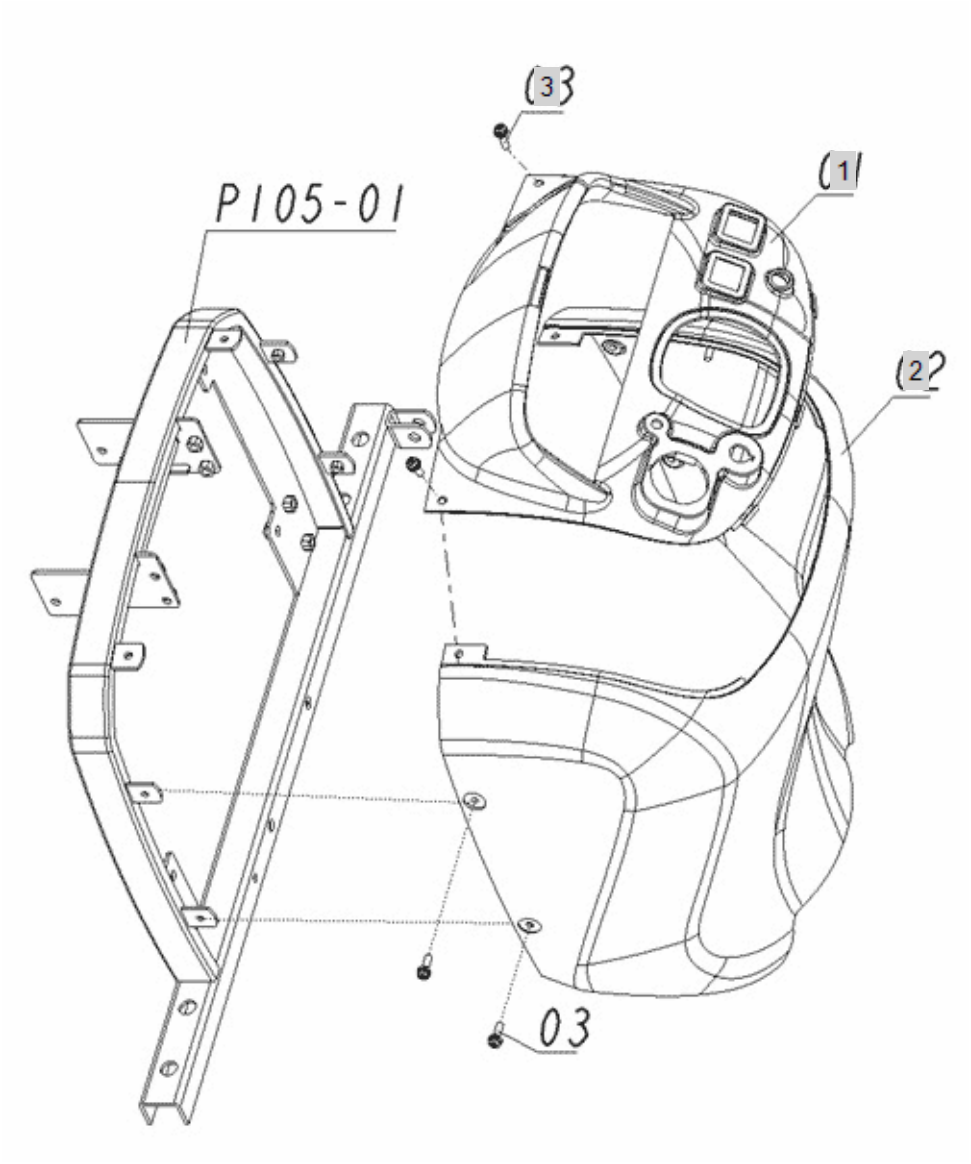

FIG 104. Branson 2400	PANEL COVER	Year/Month 2020/01

KeyNo.	Part Number	Part Name	Quantity	Other
1	FEB1010000A	COVER,PANNEL (UPPER)	1	
2	FEB1020000A	COVER,PANNEL	1	
3	TCE9010000A4	BOLT	6	

FIG 105. Branson 2400	SHUTTER PLATE	Year/Month 2020/01

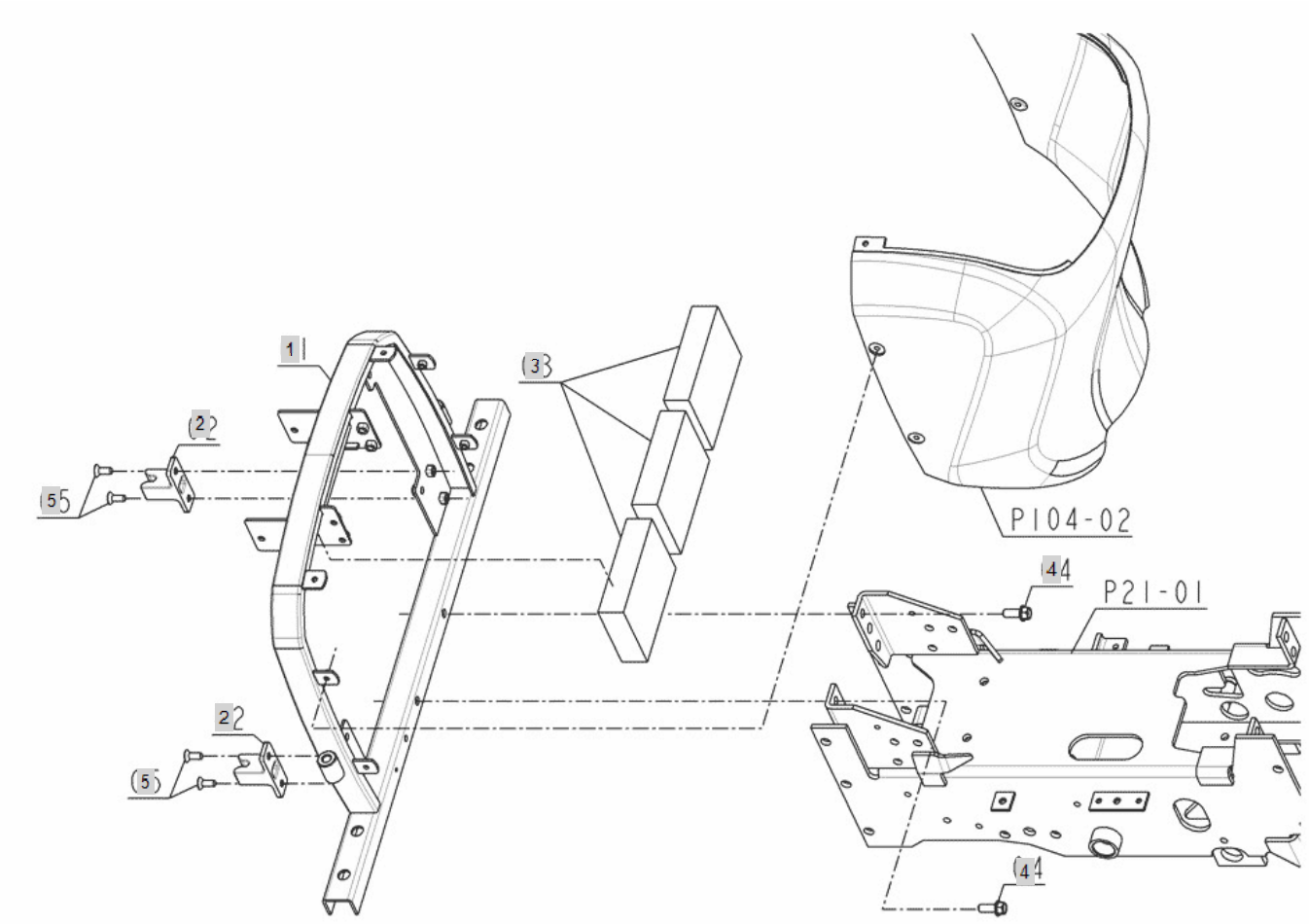

FIG 105. Branson 2400	SHUTTER PLATE	Year/Month 2020/01

KeyNo.	Part Number	Part Name	Quantity	Other
1	TA00016843C	PILLAR, CENTER	1	
2	FEB3020000A	HOOK	2	
3	FEB3030000A	SPONGE	3	
4	26013-100252	SCREW,CAPTIVEWASHERCAP	2	
5	26577-080202	SCREW FLAT HEAD	4	

FIG 106A Branson 2400	LEVER GUIDE	Year/Month 2020/01

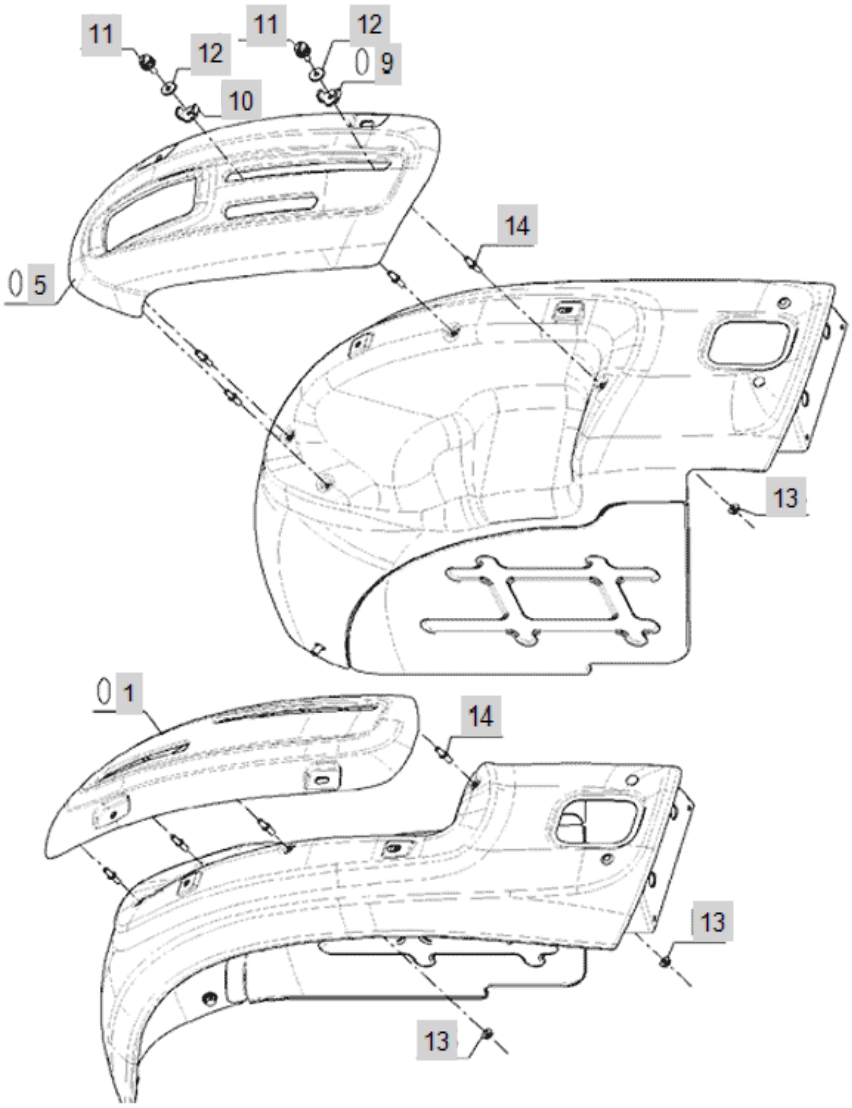

FIG 106A Branson 2400	LEVER GUIDE	Year/Month 2020/01

KeyNo.	Part Number	Part Name	Quantity	Other
1	FEB4010000A	GUIDE(L), LEVER	1	
5	FEB4050000B	ASS'Y GUIDE, LEVER RH	1	
9	TA00016323A	HOLDER, HYD LEVER	1	
10	FEB4100000A	HOLDER,HYD.LEVERUP	1	
11	CE68060000A4	HANDLEBOLT6*15	2	
12	22157-060000	WASHER, PLAIN (Φ 06)	2	
13	26366-060002	Nut, Hexa (Φ6)	8	
14	TA00001332A	INSERT BOLT(M6)	8	

FIG 108 Branson 2400	FENDER	Year/Month 2020/01

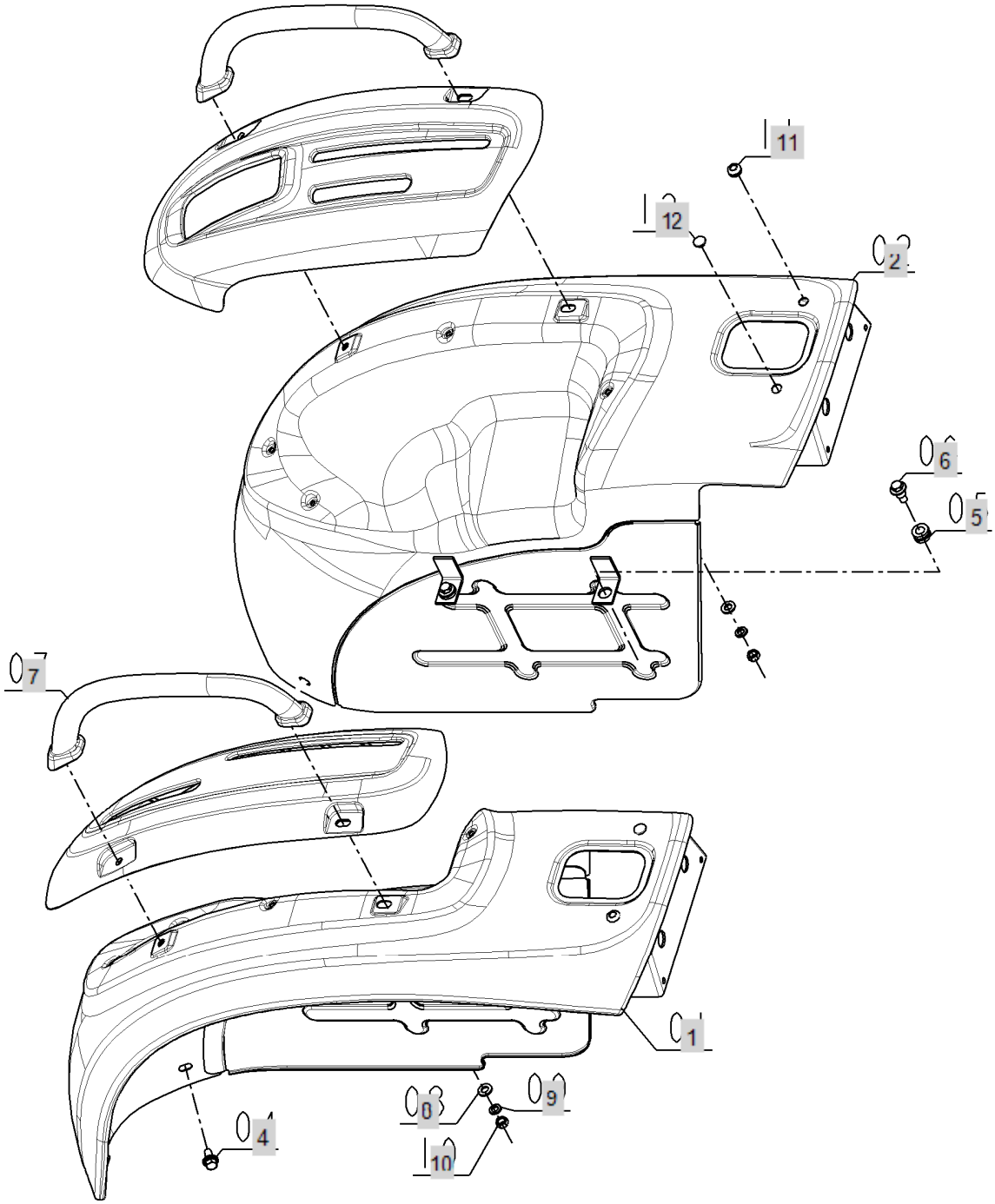

FIG 108 Branson 2400	FENDER	Year/Month 2020/01

KeyNo.	Part Number	Part Name	Quantity	Other
1	FEB6010000B	FENDER(L) ASS'Y	1	
2	FEB6020000B	FENDER(R) ASS'Y	1	
4	26014-080202	Bolt, Hexa (8-20)	4	
5	FEB6050000A	CUSHION	4	
6	FEB6060000A	BOLT	4	
7	FEB6070000A	HANDRAIL	2	
8	22127-080000	WASHER, PLAIN (D80)	4	
9	22217-080000	WASHER, SPRING (Φ 08)	4	
10	26716-080002	NUT,HEX (D8)	4	
11	TB40280000A4	GROMET 8	2	
12	TTD6650000A4	RUBBER	2	

FIG 109. Branson 2400	FENDER STAY	Year/Month 2020/01

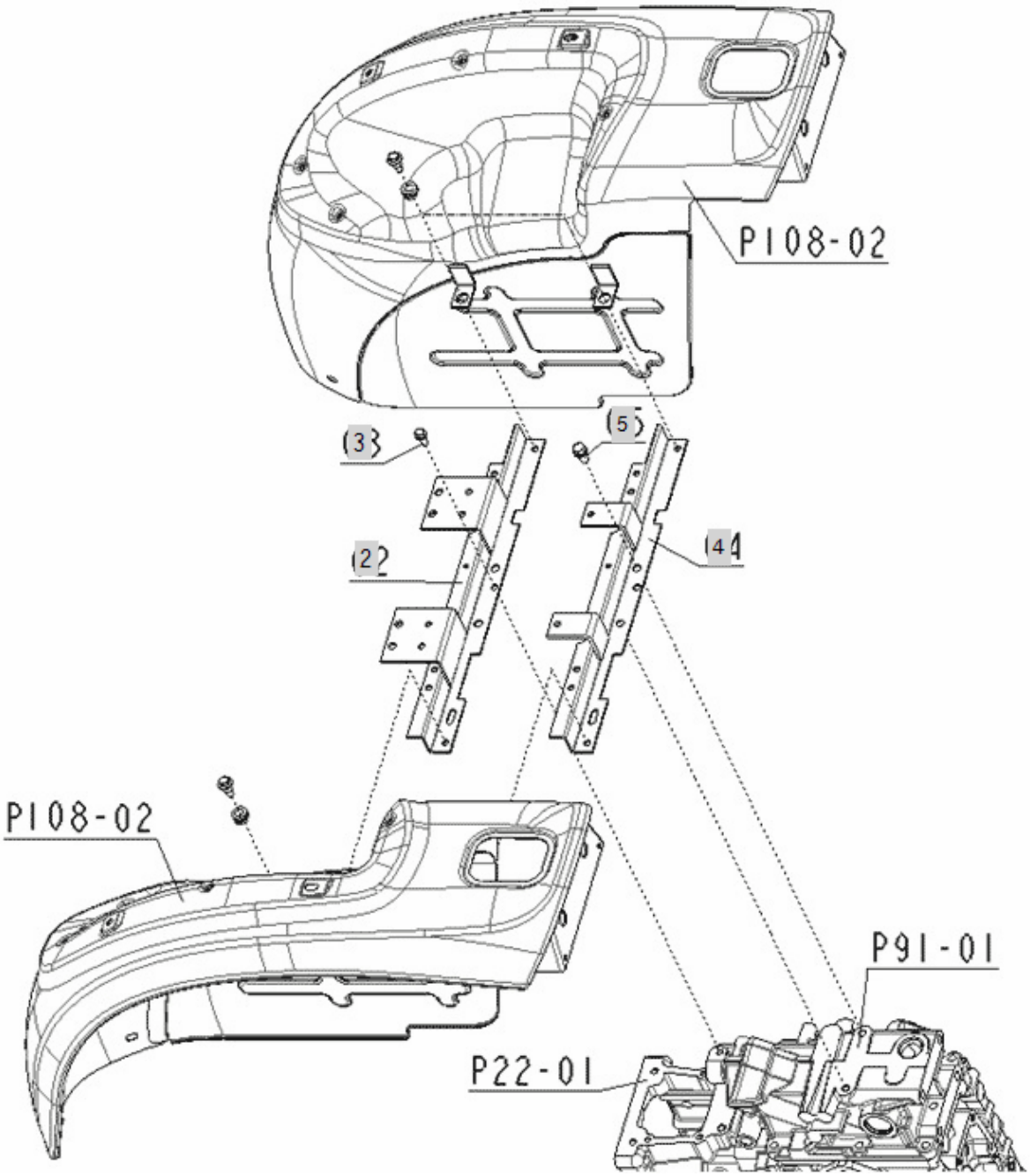

FIG 109. Branson 2400	FENDER STAY	Year/Month 2020/01

KeyNo.	Part Number	Part Name	Quantity	Other
2	FEB7020000D	STAY, FENDER	1	
3	26013-080182	SCREW,CAPTIVEWASHERCAP	1	
4	FEB7040000B		1	
5	26013-100202	BOLT(+SW)	2	

FIG 110A Branson 2400	FLOOR SEAT	Year/Month 2020/01

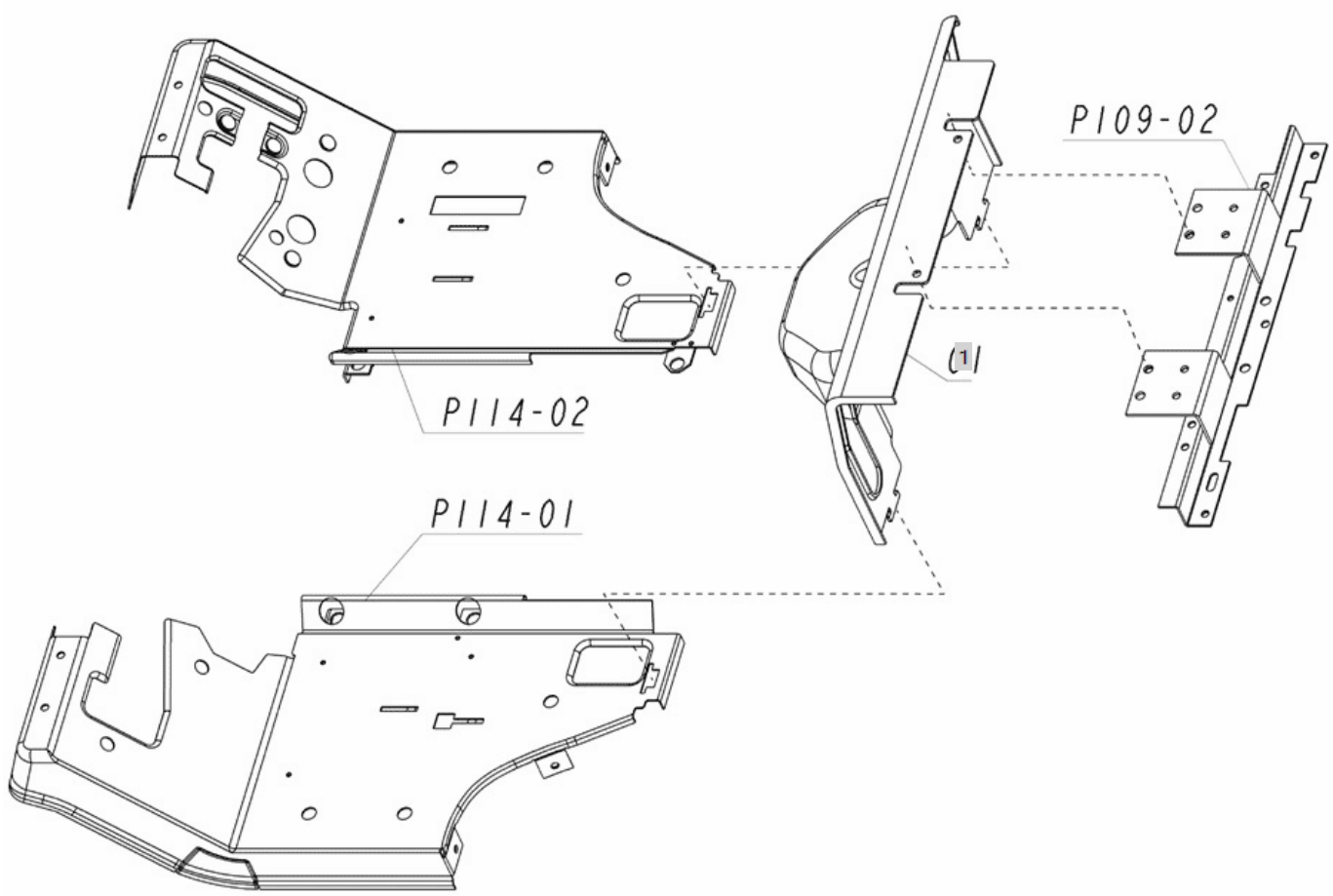

FIG 110A Branson 2400	FLOOR SEAT	Year/Month 2020/01

KeyNo.	Part Number	Part Name	Quantity	Other
1	FEB8010000B		1	

FIG 111. Branson 2400	SEAT	Year/Month 2020/01

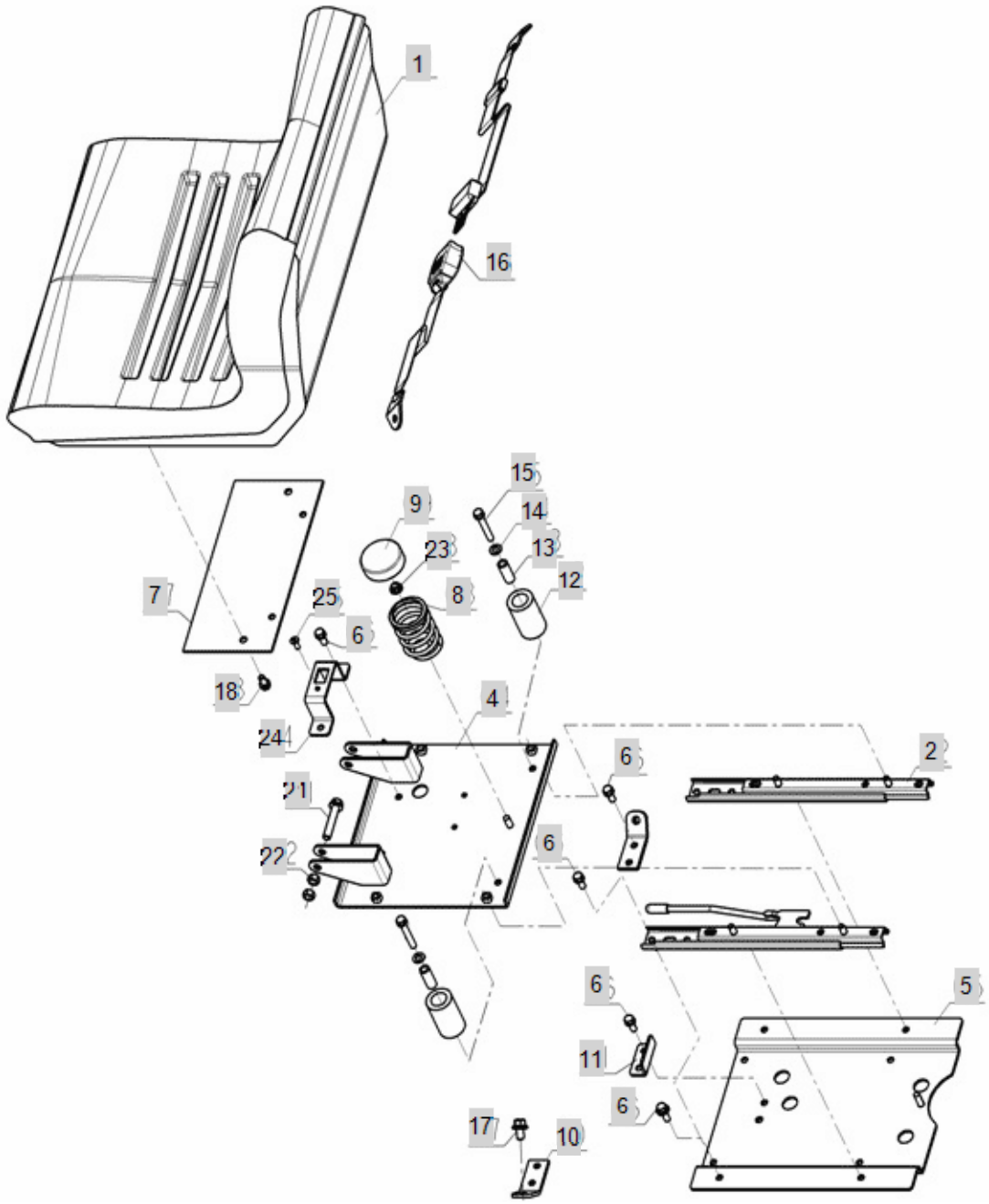

FIG 111. Branson 2400	SEAT	Year/Month 2020/01

KeyNo.	Part Number	Part Name	Quantity	Other
1	FEB9010000A	SEAT ASS'Y	1	
2	FEB9020000A	RAIL, SEAT ASS'Y	1	
4	FEB9040000B		1	
5	FEB9050000B		1	
6	26013-080202	Bolt, Hexa (8-20)	14	
7	FEB9070000B	STAY ASS'Y(UPPER),SEAT	1	
8	FEB9080000A	CHAIR SPING	1	
9	FEB9090000A	CAP, SPRING	1	
10	FEB9100000A	BRACKET, SEAT BELT	2	
11	FEB9110000A		1	
12	RR59030000A4	RUBBER,CUSION	2	
13	RR59040000A4	COLLAR9*14*35	2	
14	22127-080000	WASHER, PLAIN (D80)	2	
15	26013-080552	SCREW,CAPTIVEWASHERCAP	2	
16	TTE0230000B3	SEAT SAFETY BELT	1	
17	26014-100202	Bolt, Hexa (10-20)	2	
18	26013-080162	Bolt, Hexa (8-16)	4	
21	26106-100552	BOLT	2	
22	26716-100002	Nut, Hexa (Φ10)	4	
23	26366-080002	Nut, Hexa (Φ8)	1	
24	FEB9120000A		1	
25	26577-060162		1	

FIG 112A-1 Branson 2400	STEP_2400	Year/Month 2020/01

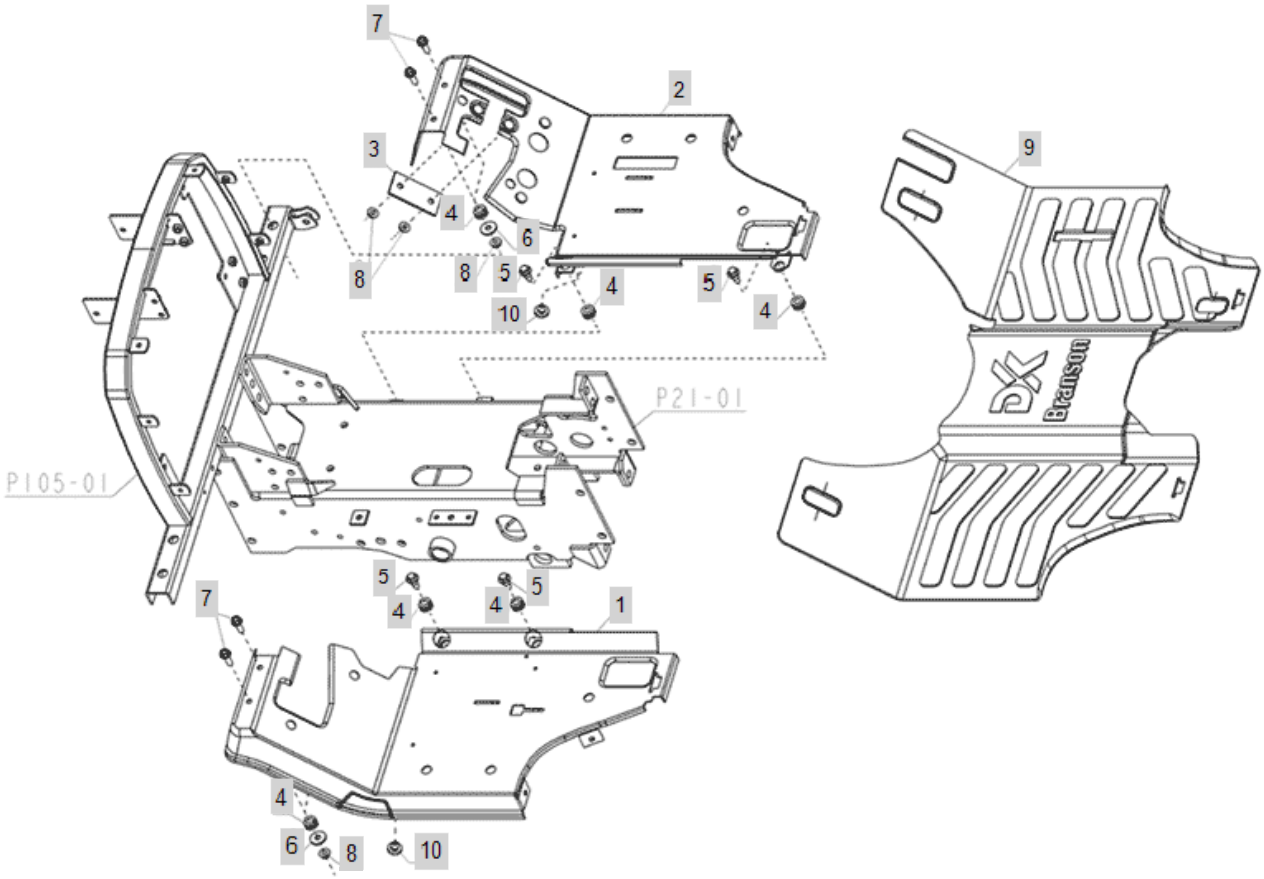

FIG 112A-1 Branson 2400	STEP_2400	Year/Month 2020/01

KeyNo.	Part Number	Part Name	Quantity	Other
1	FEC0010000B	STEP(L)	0	
2	FEC0020000G	STEP RH	0	
3	FEC0030000A	SUPPORT, STEP RH	0	
4	FEB6050000A	CUSHION	0	
5	FEB6060000A	BOLT	0	
6	22157-080000	WASHER, PLAIN (Φ 08)	0	
7	26106-080252	SCREW,HEXFLANGEHEADCAP	0	
8	26366-080002	Nut, Hexa (Φ8)	0	
9	FEC0100000E	Step Matte	0	
10	RRB9260000A4	STOPER, VERTICAL FEED CAM	0	

FIG 112A-2 Branson 2400	STEP(2018.04)	Year/Month 2020/01

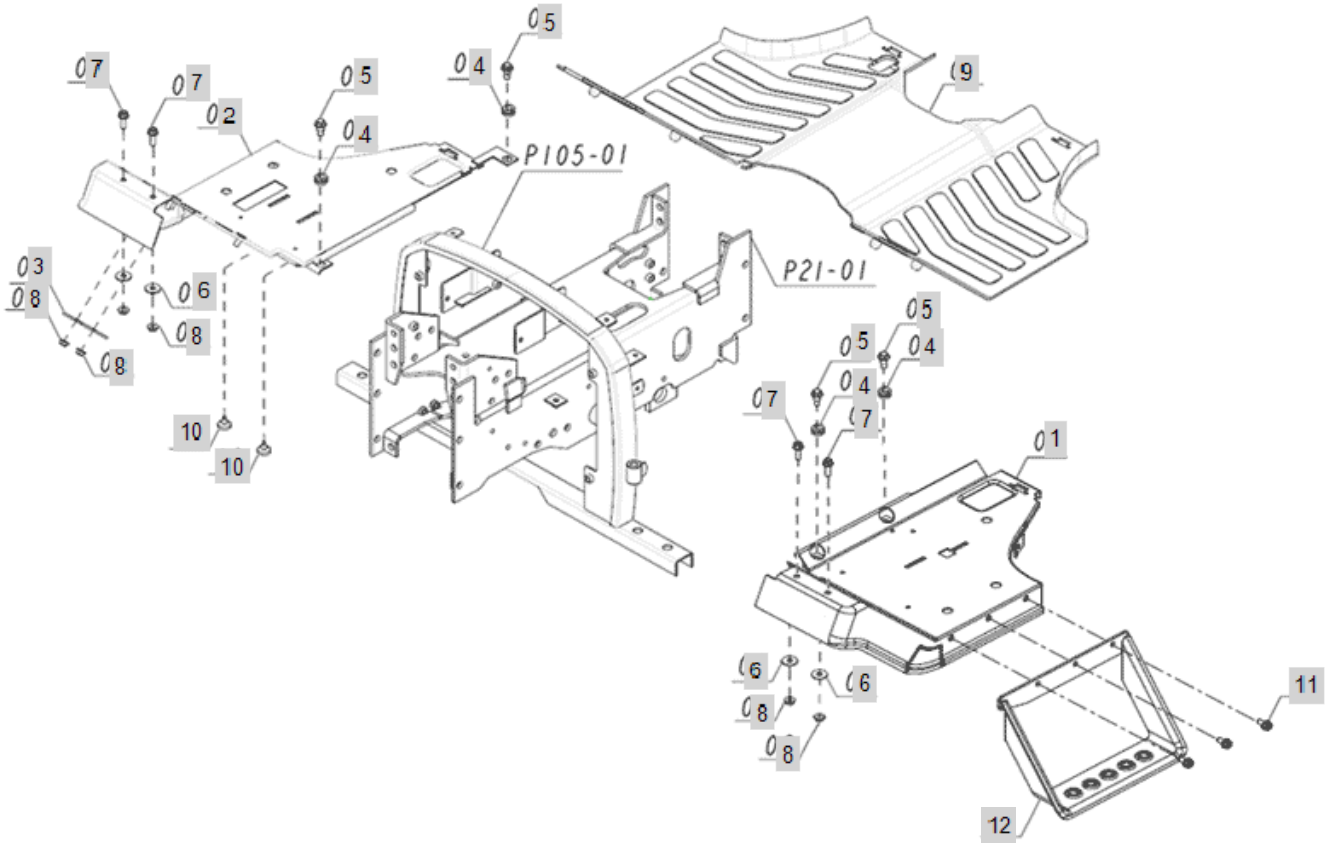

FIG 112A-2 Branson 2400	STEP(2018.04)	Year/Month 2020/01

KeyNo.	Part Number	Part Name	Quantity	Other
1	FEC0010000C	STEP LH	1	
2	FEC0020000G	STEP RH	1	
3	FEC0030000A	SUPPORT, STEP RH	1	
4	FEB6050000A	CUSHION	8	
5	FEB6060000A	BOLT	4	
6	22157-080000	WASHER, PLAIN (Φ 08)	4	
7	26106-080252	SCREW,HEXFLANGEHEADCAP	4	
8	26366-080002	Nut, Hexa (Φ8)	6	
9	TA00055336A	MAT	1	
9-1	FEC0100000E	Step Matte	1	DELETE
10	RRB9260000A4	STOPER, VERTICAL FEED CAM	3	
11	26106-080162	SCREW,HEXFLANGEHEADCAP	3	
12	TA00051072A	ASS'Y, STEP	1	

FIG 113-1 Branson 2400	ROPS	Year/Month 2020/01

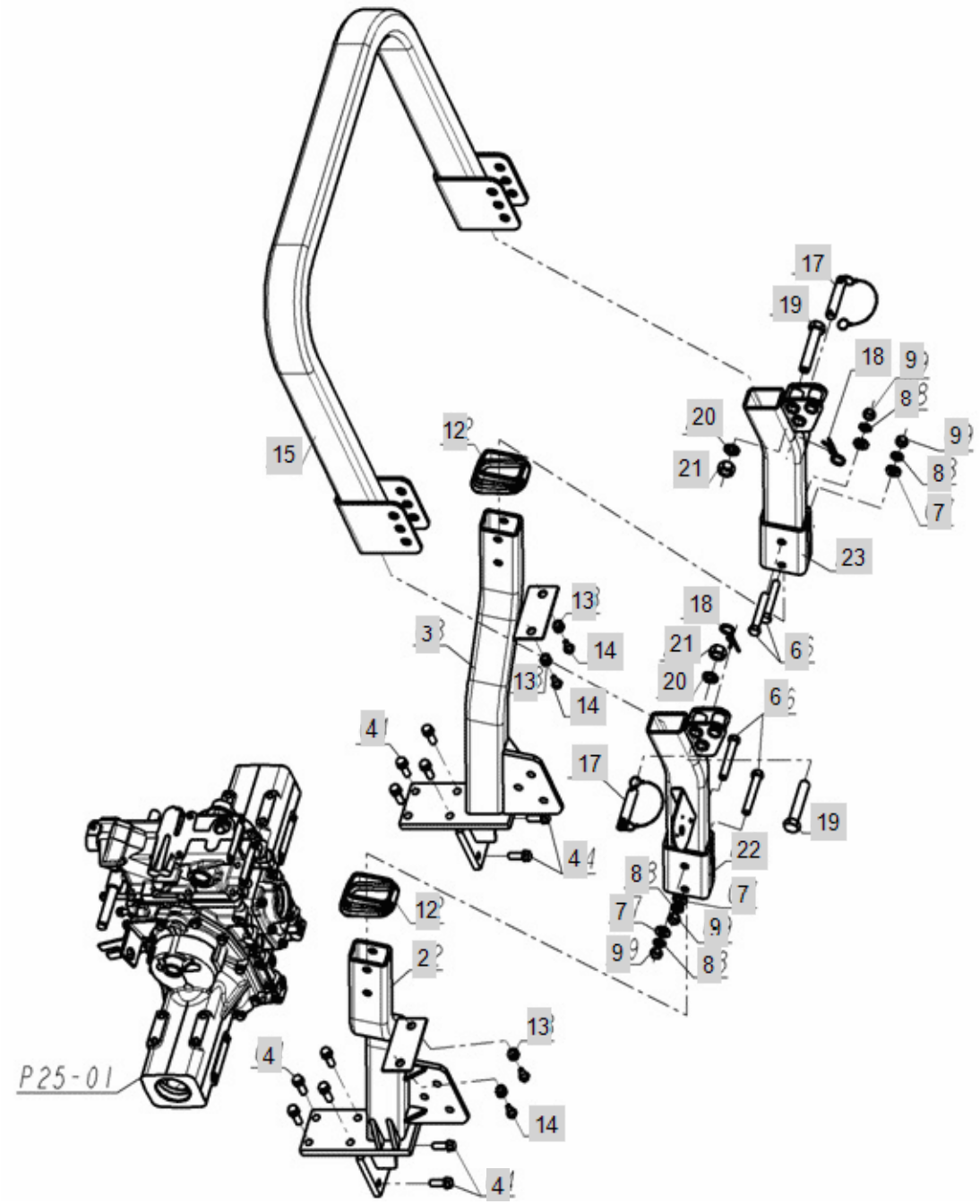

FIG 113-1 Branson 2400	ROPS	Year/Month 2020/01

KeyNo.	Part Number	Part Name	Quantity	Other
2	FEC1020000B		1	
3	FEC1030000B		1	
4	26013-120352	SCREW,CAPTIVEWASHERCAP	12	
6	26116-140902	HEX BOLT	4	
7	22127-140000	WASHER, PLAIN (Φ 14)	4	
8	22217-140000	WASHER, SPRING (Φ 14)	4	
9	26716-140002	NUT	4	
12	FEC1220000A	COVER, ROPS	2	
13	FEB6050000A	CUSHION	4	
14	FEB6060000A	BOLT	4	
15	FEC2010000C	UPPER FRAME ASS'Y	1	
17	NTF8400000A3	ROPSPIN	2	
18	TTE7010000A4	SNAPPIN	2	
19	26116-181002	BOLT	2	
20	22217-180000	WASHER, SPRING (Φ 18)	2	
21	26347-180002	NUT	2	
22	TA00016844B	MIDDLE FRAME	1	
23	TA00016845B	MIDDLE FRAME R	1	

FIG 113-2 Branson 2400	ROPS(2018.05)	Year/Month 2020/01

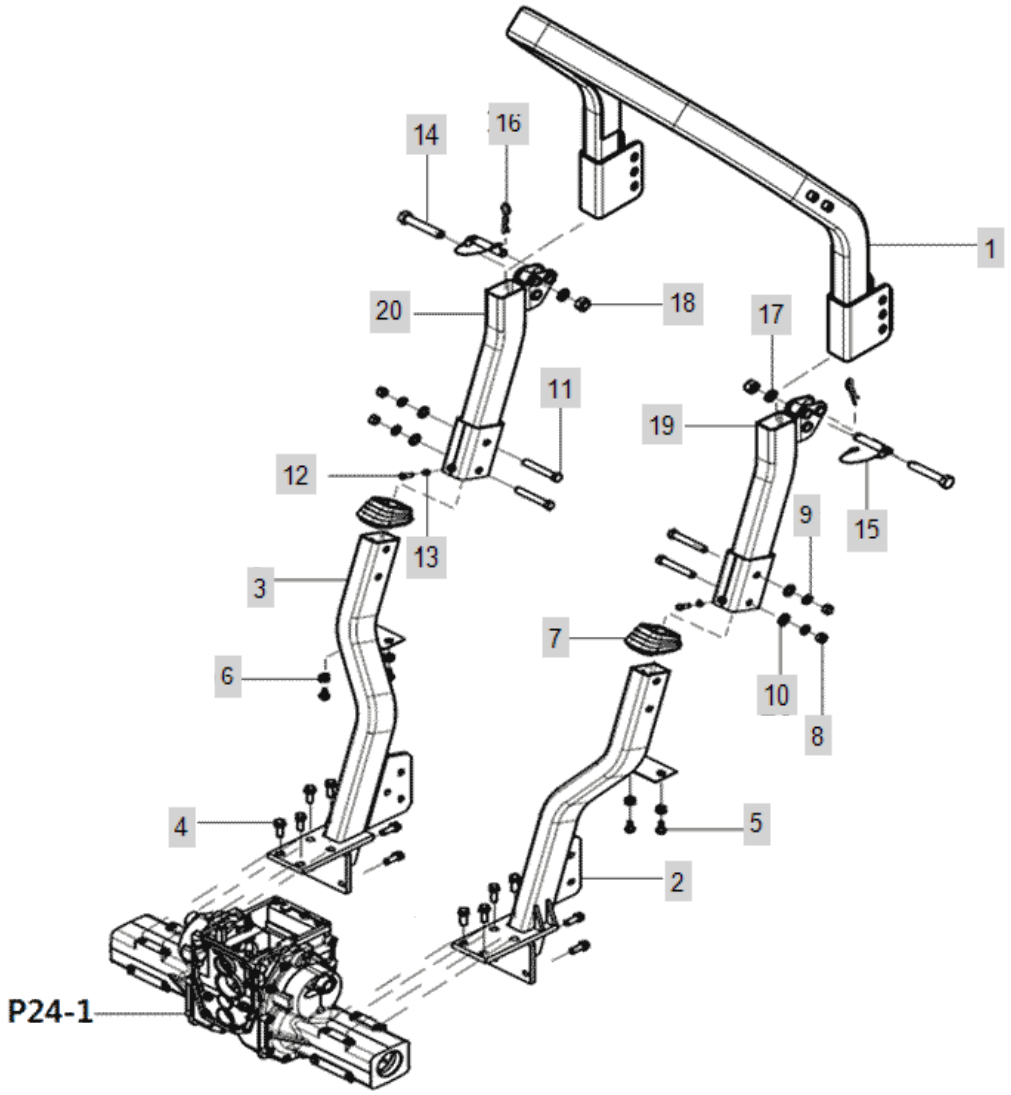

FIG 113-2 Branson 2400	ROPS(2018.05)	Year/Month 2020/01

KeyNo.	Part Number	Part Name	Quantity	Other
1	TA00048599A	UPPER FRAME ASSY	1	
2	FEC1020000C	FRAME, LOWER LH	1	
3	FEC1030000C	FRAME, LOWER RH	1	
4	26013-120352	SCREW,CAPTIVEWASHERCAP	12	
5	FEB6060000A	BOLT	4	
6	FEB6050000A	CUSHION	4	
7	FEC1220000A	COVER, ROPS	2	
8	26716-140002	NUT	4	
9	22217-140000	WASHER, SPRING (Φ 14)	4	
10	22127-140000	WASHER, PLAIN (Φ 14)	4	
11	26116-140902	HEX BOLT	4	
12	26116-080252	BOLT7T(8X25)	2	
13	26757-080002	NUT, ADJUSTING SCREW	2	
14	26116-180902	BOLT	2	
15	NTF8400000A3	ROPSPIN	2	
16	TTE7010000A4	SNAPPIN	2	
17	22217-180000	WASHER, SPRING (Φ 18)	2	
18	26347-180002	NUT	2	
19	TA00039934A	MIDDLE FRAME L	1	
20	TA00039935A	MIDDLE FRAME R	1	

FIG 113-3 Branson 2400	ROPS(2018.06~)	Year/Month 2020/01

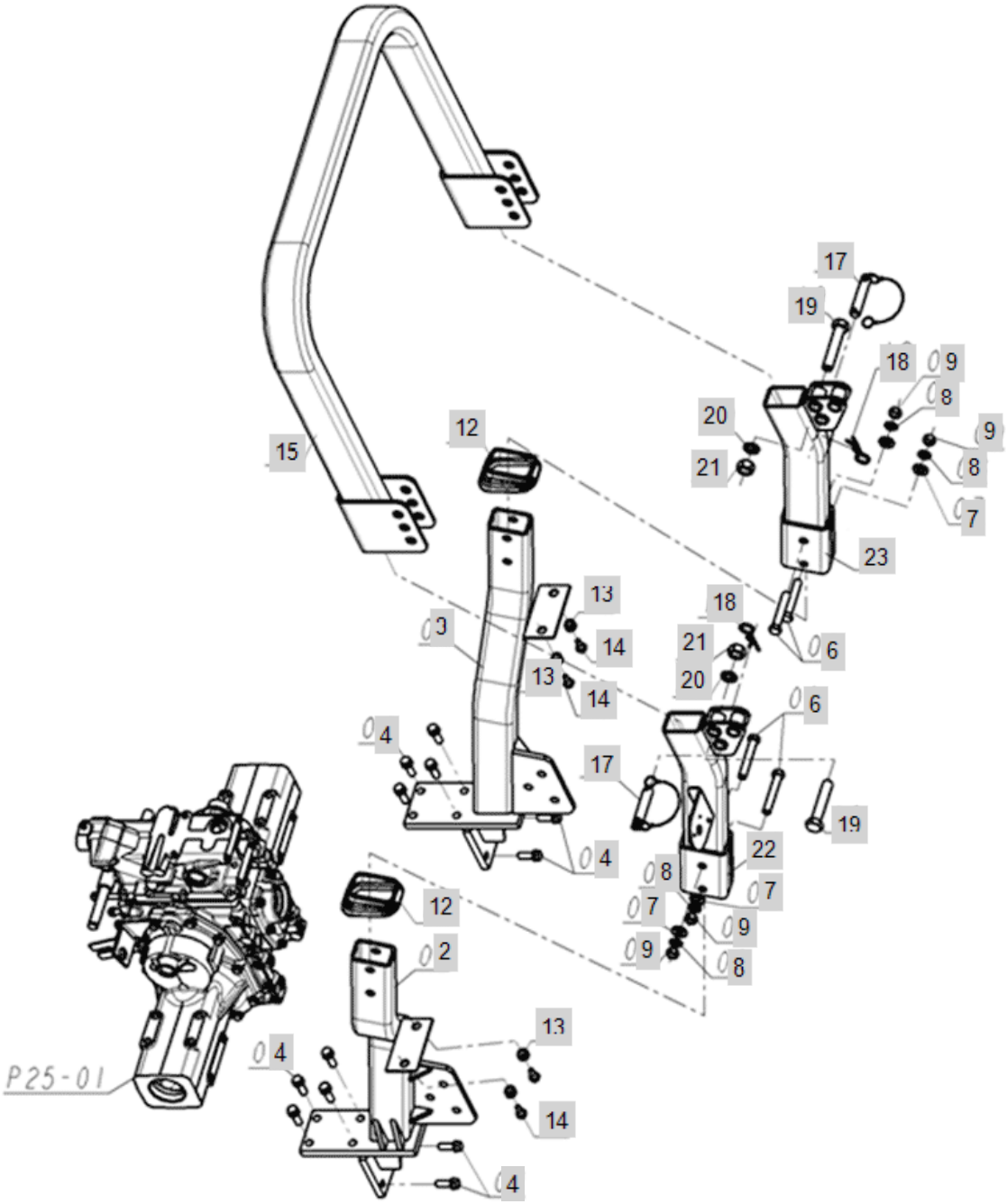

FIG 113-3 Branson 2400	ROPS(2018.06~)	Year/Month 2020/01

KeyNo.	Part Number	Part Name	Quantity	Other
2	TA00056409A	ASS'Y, LOWER FRAME	1	
3	TA00056410A	ASS'Y, LOWER FRAME	1	
4	26013-120352	SCREW,CAPTIVEWASHERCAP	12	
6	26116-140902	HEX BOLT	4	
7	22127-140000	WASHER, PLAIN (Φ 14)	4	
8	22217-140000	WASHER, SPRING (Φ 14)	4	
9	26716-140002	NUT	4	
12	FEC1220000A	COVER, ROPS	2	
13	FEB6050000A	CUSHION	4	
14	FEB6060000A	BOLT	4	
15	FEC2010000C	UPPER FRAME ASS'Y	1	
17	NTF8400000A3	ROPSPIN	2	
18	TTE7010000A4	SNAPPIN	2	
19	26116-181002	BOLT	2	
20	22217-180000	WASHER, SPRING (Φ 18)	2	
21	26347-180002	NUT	2	
22	TA00052517A	FRAME ASS'Y, MID L	1	
23	TA00052519A	FRAME ASS'Y, MID R	1	

FIG 115 Branson 2400	SMV BRACKET	Year/Month 2020/01

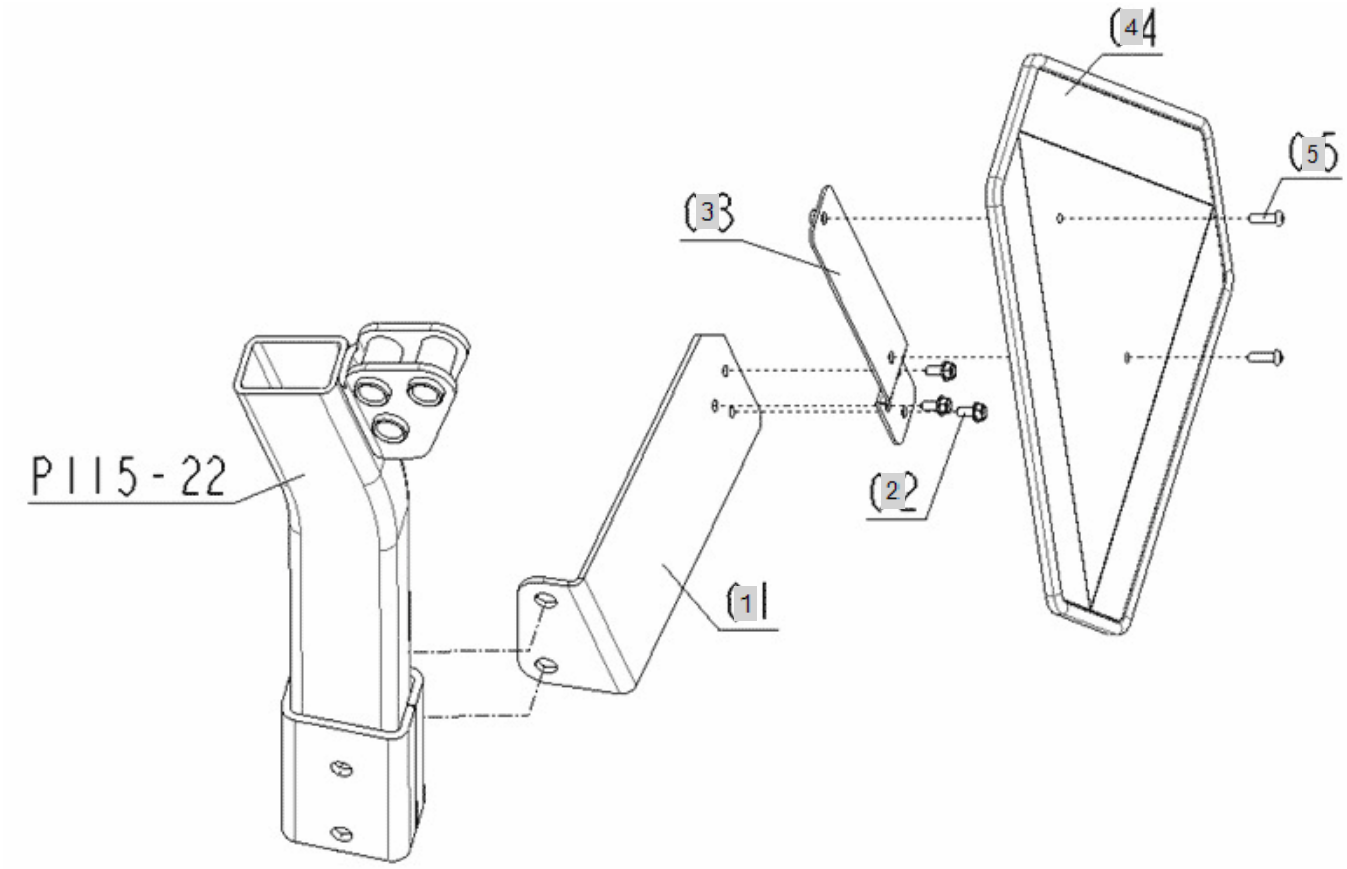

FIG 115 Branson 2400	SMV BRACKET	Year/Month 2020/01

KeyNo.	Part Number	Part Name	Quantity	Other
1	FEC3010000A	BRACKET,SMV	1	
2	26106-060142	BOLT	3	
3	TZE1040003B3	SMV BRACKET ASS'Y	1	
4	FEC3020000A		1	
5	26557-060202	SCREW	2	

FIG 118 Branson 2400	FRONT WHEEL	Year/Month 2020/01

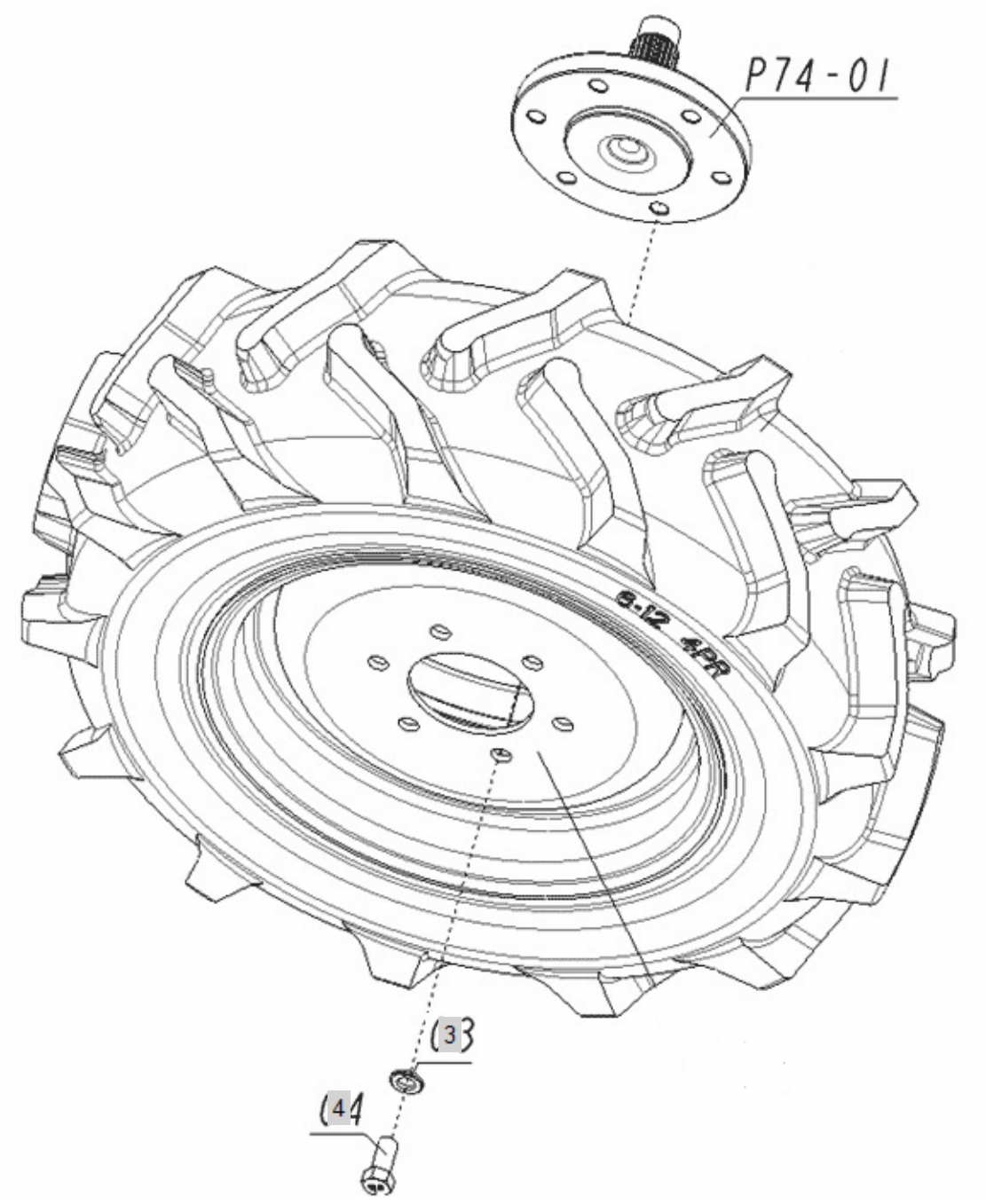

FIG 118 Branson 2400	FRONT WHEEL	Year/Month 2020/01

KeyNo.	Part Number	Part Name	Quantity	Other
3	22217-120000	WASHER, SPRING (Φ 12)	12	
4	FEC4090000A	BOLT	12	

FIG 119 Branson 2400	REAR WHEEL	Year/Month 2020/01

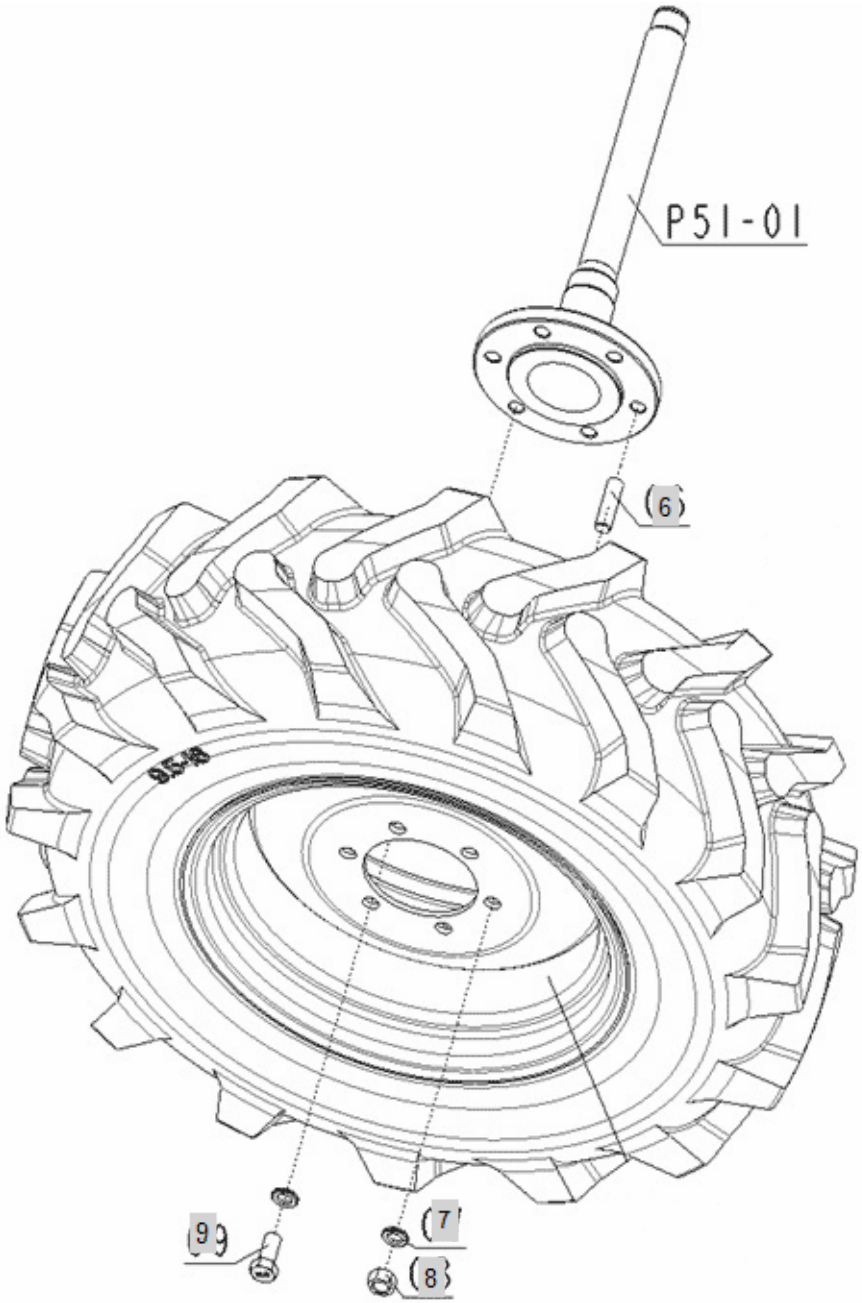

FIG 119 Branson 2400	REAR WHEEL	Year/Month 2020/01

KeyNo.	Part Number	Part Name	Quantity	Other
6	26236-160282	BOLT,STUD	4	
7	22217-160000	WASHER, SPRING (Φ 16)	12	
8	26736-160002	HEXNUT	4	
9	FT24400000A	BOLT -> FT24400000A4	8	

FIG 120A Branson 2400	DECAL _2400	Year/Month 2020/01

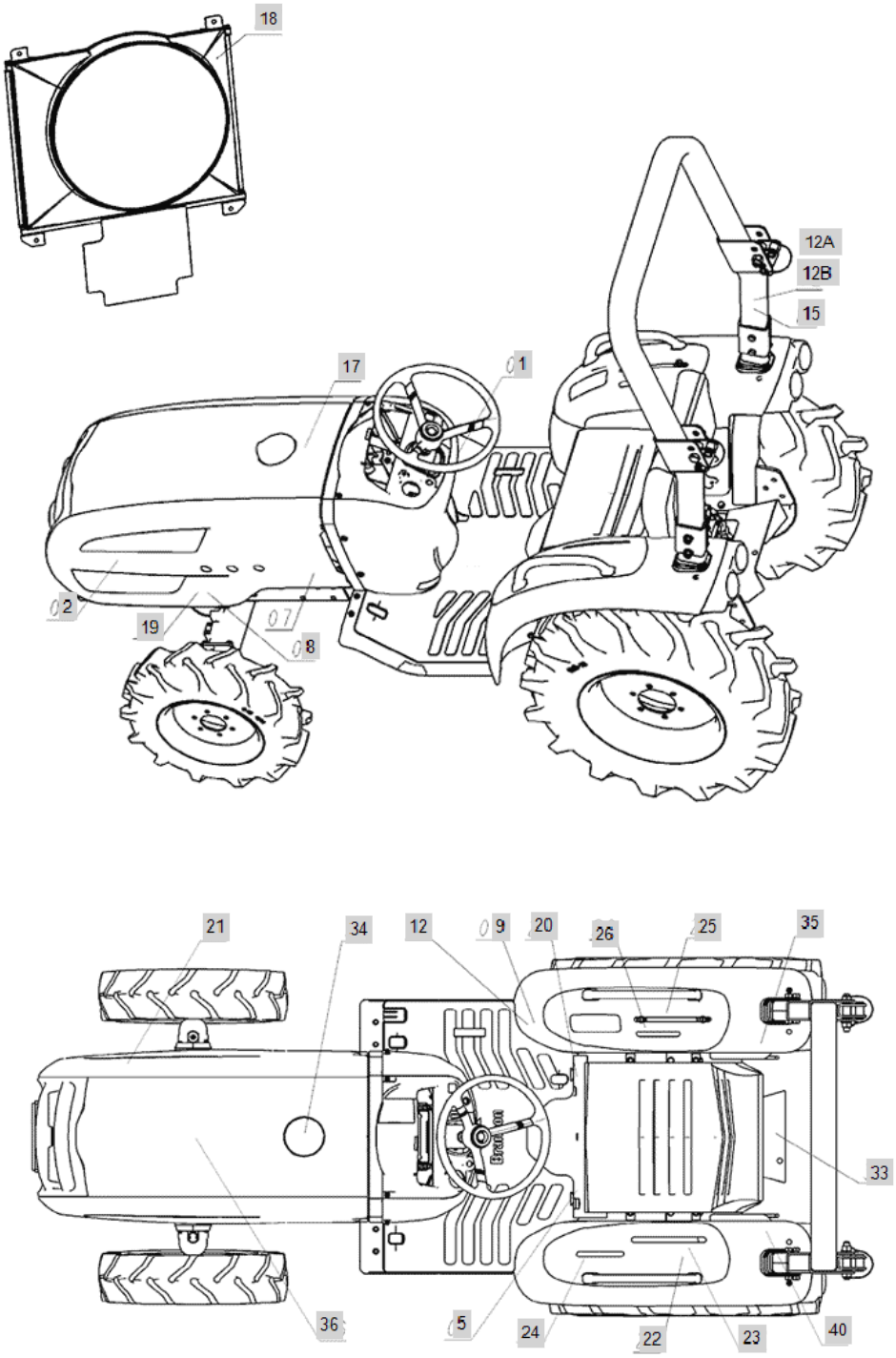

FIG 120A Branson 2400	DECAL _2400	Year/Month 2020/01

KeyNo.	Part Number	Part Name	Quantity	Other
1	TZE4330000B4	MARK, MAIN SWITCH	1	
2	FED2020000A	NAME PLATE(2400)	2	
5	TZE4150000A4	LABEL, PAKING BRAKE	1	
8	TZE5110000B4	NAMEPLATE,STARTERWARNING	1	
9	TA00016518A	CAUTION DECAL	1	
12	TA00016829A	ROPS LABEL	1	
11	NTE5220000C4	NAMEPLATE,DANGER	1	
11-1	NTE5220000C4	NAMEPLATE,DANGER	1	delete
12A	TZE5170000B3	NAME PLATE, ROPS CAUTION	1	
12B	TA00016829A	ROPS LABEL	1	
15	NTE5210000C4	NAMEPLATE,SAFETY	2	
17	TZE4190000C4	LABEL, FUEL CAUTION	1	
18	TZE5180000C4	NAME PLATE, REVOLUTION	1	
19	TZE5130000C4	NAME PLATE, CAUTION	1	
20	TZE4130000B4	LABEL,DIFFERENTIAL	1	
21	FED2210000D	NAME PLATE	1	
22	TA00051323A	DECAL, PTO	1	
23	TA00051903B	DECAL	1	
24	FED2240000B	LABEL, RANGE SHIFT	1	
25	TZE4170000B4	LABEL,HYDLIFT	1	
26	FED2260000B	LABEL, 4WD	1	
33	TZE4300000B4	NAME PLATE, PTO CAUTION	1	
34	FBE4990000A4	NAME PLATE, CAUTION	1	
35	NTE5150000C4	NAMEPLATE,SEATBELT	1	
36	EA00004125A	ENGINE PLATE(A1100T2-UTR_4)	1	
40	TA00016634A	LABEL,SEATBELT	1	

FIG 121 Branson 2400	BALLAST WEIGHT	Year/Month 2020/01

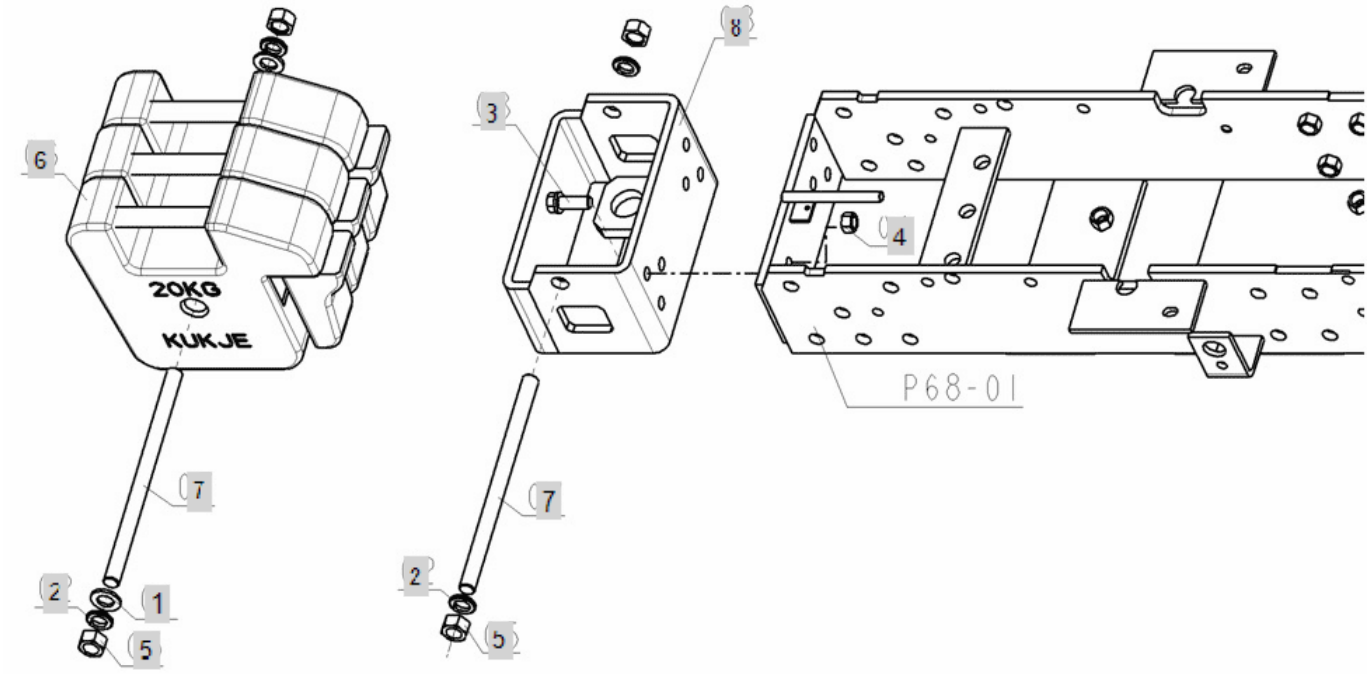

FIG 121 Branson 2400	BALLAST WEIGHT	Year/Month 2020/01

KeyNo.	Part Number	Part Name	Quantity	Other
1	22137-160000	WASHER, PLAIN (Φ 16)	2	
2	22217-160000	WASHER, SPRING (Φ 16)	4	
3	26013-120352	SCREW,CAPTIVEWASHERCAP	6	
4	26716-120002	BOLT,CYLINDER HEAD(B)	6	
5	26716-160002	NUT	4	
6	TTG0010000C2	WEIGHT,FRONT	3	
7	TA00016911A	BAR WEIGHT	2	
8	TA00016906A	FRONT HITCH ASS'Y	1	

FIG 122 Branson 2400	REAR VIEW MIRROR	Year/Month 2020/01

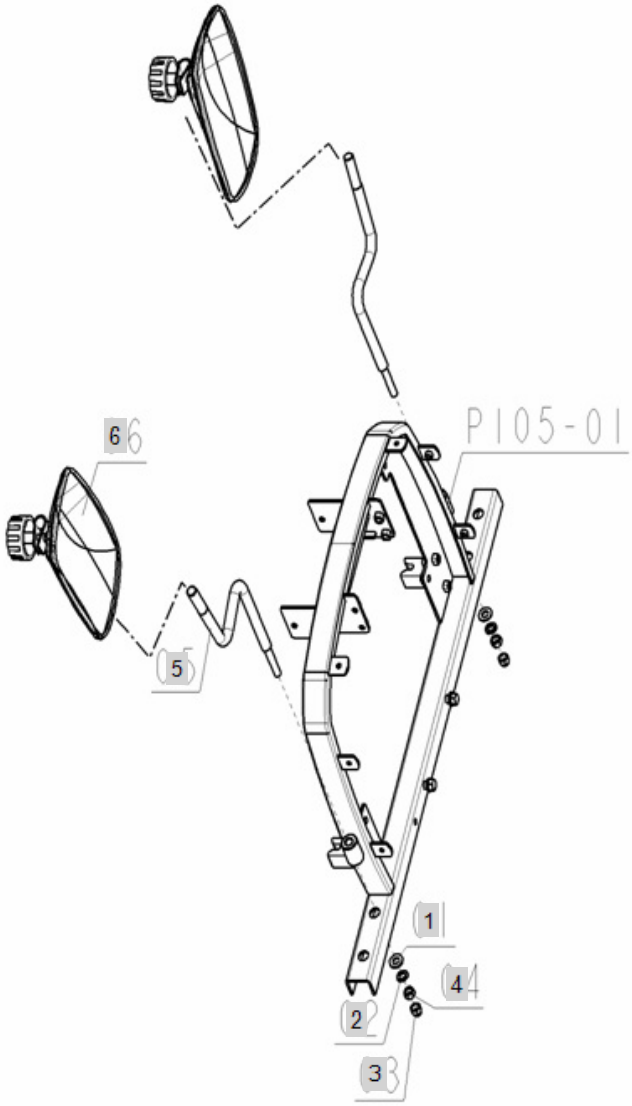

FIG 122 Branson 2400	REAR VIEW MIRROR	Year/Month 2020/01

KeyNo.	Part Number	Part Name	Quantity	Other
1	22137-100000	WASHER, PLAIN (Φ 10)	2	
2	22217-100000	WASHER, SPRING (Φ 10)	2	
3	26657-100002	CAPNUT10	2	
4	26716-100002	Nut, Hexa (Φ10)	2	
5	NTD716E000B3	BACKMIRROR,STAY	2	
6	NTD719E000A3	BACKMIRRORASSY	2	