Ring and shear-plate connector joints

STEP lecture C9
H.J. Blass
Delft University
of Technology

Objectives

To show the different types of timber connectors placed in precut grooves and the fabrication of respective joints. To explain the background of the models used to calculate the characteristic strength values of ring and shear-plate connector joints.

Prerequisite

C15 Multiple fastener joints

Summary

Various forms of ring and shear-plate timber connectors are identified. The load-carrying behaviour of connections with ring, or shear-plate connectors, and bolts is described. The possible failure modes for different load-grain angles and their effect on the design values of the connection strength are discussed. Special attention is given to the required spacing, end and edge distances of the connectors in a joint.

Introduction

Ring and shear-plate connectors are used in laterally loaded timber-to-timber and steel-to-timber joints, generally in combination with bolts. While ring connectors are exclusively applied in timber-to-timber joints, shear-plate connectors may be used for steel-to-timber joints as well as for timber-to-timber joints. Shear-plate connectors are normally installed before the assembly of the structure and the joints are demountable (see Figure 1).

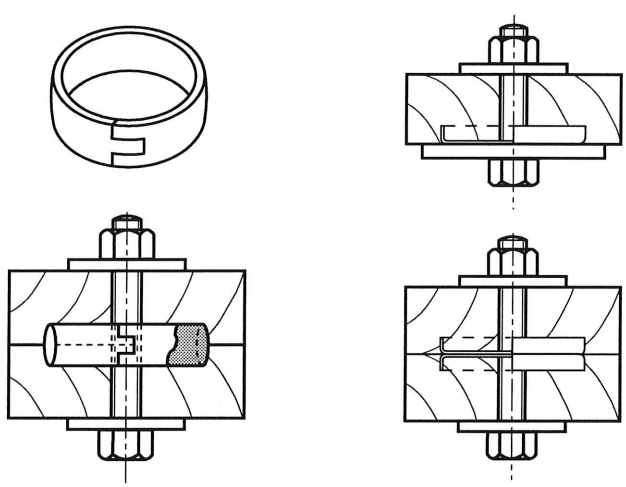

Figure 1 Ring connection (left) and shear-plate connection (right).

Ring and shear-plate connectors are available in a variety of shapes and sizes, with diameters ranging from 60 to 260 *mm*. They are always circular because they are placed into precut grooves produced by rotary cutters and are made from aluminum cast alloy, steel or cast iron. Those connectors commonly used in Europe are specified in prEN 912 "Timber fasteners - Specifications for connectors for timber". In prEN 912 ring connectors are denoted as Type A whereas shear-plate connectors are listed as Type B.

The production of ring and shear-plate connector joints comprises several steps. First, the bolt hole and the connector groove are drilled into the wood (see Figure 2 left). For the connector grooves proper cutters are necessary, corresponding to the shape of the ring cross-section. Then, the connectors are placed into the grooves and the timber members to be connected are put together. Finally, the bolts are inserted into the holes and tightened (see Figure 2 right). As an alternative to bolts, coach screws may be used to hold the connection together.

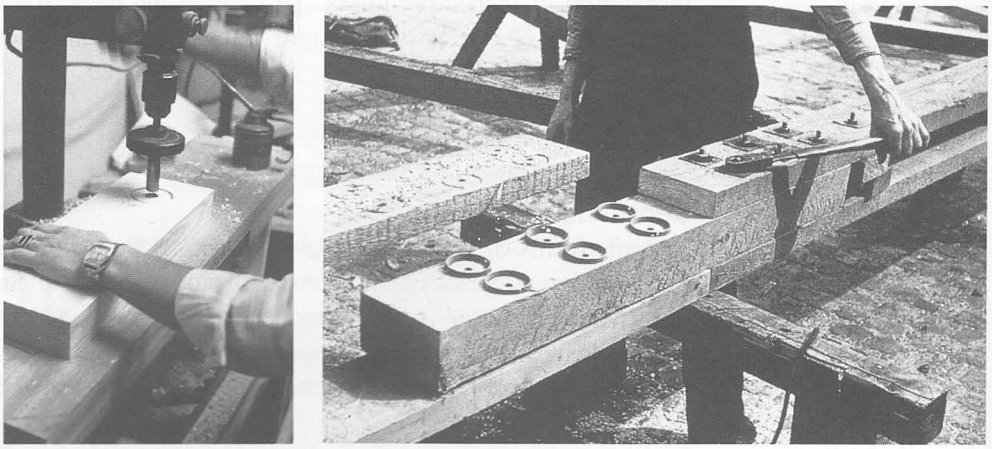

Figure 2 *Drilling of the bolt hole and cutting the groove for the connector (left) and assembly of a ring connector joint (right).*

Load-carrying behaviour and calculation model

The load in a ring connector joint is transferred from one timber member through embedding stresses into the ring connector and further through the shear resistance of the ring into the other timber member. In shear-plate connections, the load transfer is slightly different: after the transfer of the load into the connector, the bolt is loaded through embedding stresses between shear-plate and bolt, and the load is transferred through the shear resistance of the bolt. Then, either the steel member or the second shear-plate is loaded by the bolt. In shear-plate connections the hole diameter in the shear plate consequently corresponds to the bolt diameter plus a small tolerance. Due to this tolerance, an initial slip can be expected in shear-plate connections.

Based on observations during tests, the failure of ring and shear-plate connections in tension is described by a model assuming a shear block failure of the wood in front of the connector. This model is to be included in a future version of EC5 or in National Application Documents. The embedment stresses which in reality are unevenly distributed over the half diameter of the ring are assumed to be uniformly distributed and acting parallel to the load direction. The embedment stresses are then transferred through shear stresses into the tension member (see Figure 3). The capacity of the bolt is ignored, since the bolt is usually placed in oversized holes and only just starts bearing when the connection fails. Figure 4 shows a failed tension test connection with shear failure both in the middle and one side member.

Assuming the shear block failure as the governing failure mode for tension joints the capacity of the connection consequently depends on the shear area in front of the connector and on the shear strength of the wood. The shear area within the connector is disregarded since in most tests the wood core within the connector shears off before the ultimate load of the connection is reached.

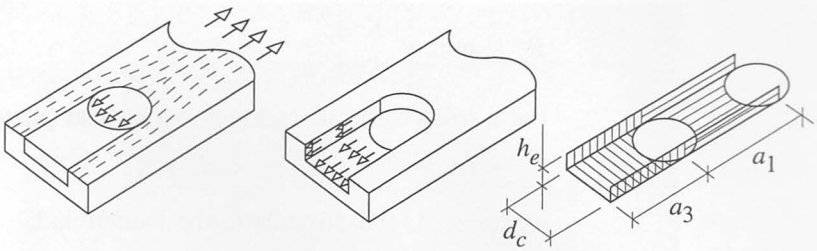

Figure 3 *Stresses in a ring connector joint and corresponding shear areas.*

However, the shear block failure occurs only if the embedding strength of the wood in front of the connector is sufficiently large. Otherwise embedding failure will govern the load-carrying capacity of the connection, as it will with larger end distances, a_3.

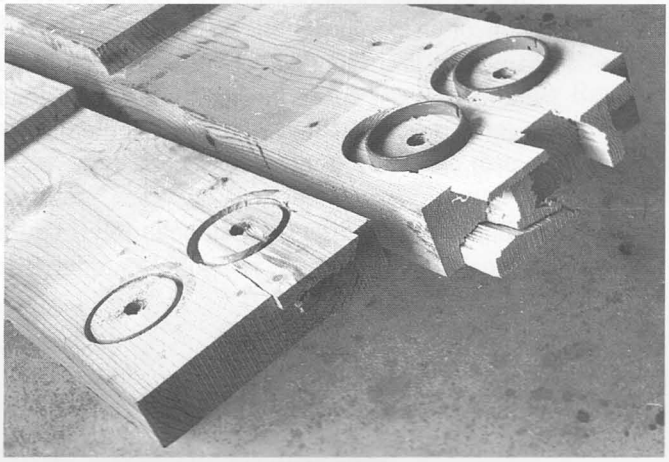

Figure 4 *Shear failure of middle and side member in a ring connector joint loaded in tension.*

The load-carrying capacity of a ring or shear-plate connector loaded in tension parallel to the grain can consequently be written as:

$$R_c = \min \begin{cases} f_v \, A_s \\ f_h \, d_c \, h_e \end{cases} \tag{1}$$

where

R_c is the load-carrying capacity of one connector,
f_v is the apparent or average shear strength,
A_s is the shear area per connector,
f_h is the embedding strength,
d_c is the connector diameter and
h_e is the depth of the connector embedment.

The apparent shear strength decreases with increasing shear area. Based on tests with ring connector joints by Kuipers and Vermeyden (1964), the following relationship between the apparent shear strength and the shear area is assumed:

$$f_v = K \, A_s^{-0,25} \tag{2}$$

where K is a parameter describing the shear strength of the wood.

Hence, the load-bearing capacity of a ring or shear-plate connector results as:

$$R_c = \min \begin{cases} K\, A_s^{0,75} \\ f_h\, d_c\, h_e \end{cases} \tag{3}$$

For a joint with one connector per shear plane the shear area is (see Figure 3):

$$A_s = (d_c + 2\, h_e)\, a_{3,t} - \pi\, d_c^2 / 8 \tag{4}$$

where $a_{3,t}$ is the distance to the loaded end.

For joints with several connectors arranged in a line, the shear area for the second and each further connector is:

$$A_s = (d_c + 2\, h_e)\, a_1 - \pi\, d_c^2 / 4 \tag{5}$$

where a_1 is the connector spacing parallel to the grain.

Ring or shear-plate connector joints loaded at an angle of more than 30° to the grain or in compression, respectively, show different failure modes. Connections with load-grain angles between about 30° and 150° show a splitting failure mode, where in most cases the member with a loading component perpendicular to the grain shows a tensile failure perpendicular to the grain (see Figure 5).

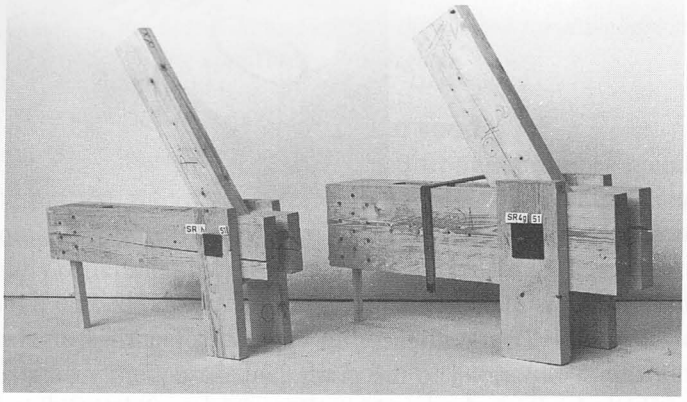

Figure 5 Splitting failure in a ring connection loaded at an angle of 60° to the grain.

Compression joints mostly fail in a combined embedding-splitting failure mode (see Figure 6). Here, the splitting occurs only after considerable embedding deformations under both the connector and the bolt. For ring or shear-plate joints loaded in compression, the bolt therefore contributes to the load-bearing capacity of the connection. This load sharing between bolt and connector can be observed only for joints loaded in compression showing larger deformations at failure and a distinct plastic behaviour when compared with joints loaded in tension or at an angle to the grain which generally fail in a brittle failure mode. Because also in compression joints the wood core within the connector shears off before the ultimate load of the connection is reached, the embedding area of the bolt is reduced by the area within the connector.

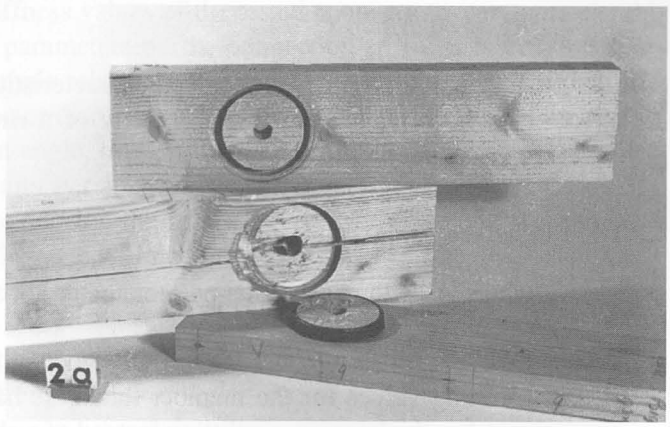

Figure 6 Embedding-splitting failure of a ring connection loaded in compression.

Strength and stiffness values from tests

The results reported here are based on tests performed in the Stevin-Laboratory of Delft University of Technology and in the Danish Building Research Institute between 1957 and 1991. One shear-plate diameter, 67 *mm*, and two ring diameters, 72 *mm* and 112 *mm*, were used. A total number of 948 tests were evaluated. A detailed description of these tests and their results is reported in Blass et al. (1994). The tests to establish the embedding strength of the wood under the connectors were performed at Brighton College of Technology (Hilson, 1969).

Embedding strength

Based on 139 tests with varying timber density, Hilson (1969a) gives the following relationship between the embedding strength under a ring or shear-plate connector and the timber density at 13% moisture content:

$$f_h = 82\ (\rho\ /\ 1000)^{1,075}\ N/mm^2 \qquad \text{with } \rho \text{ in } kg/m^3 \quad (6)$$

Equation (6) can be replaced by a more simple linear relationship:

$$f_h = 0{,}078\ \rho\ N/mm^2 \qquad \text{with } \rho \text{ in } kg/m^3 \quad (7)$$

If the bolt contribution is ignored, an approximate value of the joint strength may be obtained by using an artificial value for f_h multiplied by the projected area of the connector. From Hilson (1969b) the ratio of the theoretical connector contribution to theoretical joint strength including the bolt, based on 30 tests, averaged 0,804. The resulting value of f_h

$$f_h = 0{,}078\ /\ 0{,}804\ \rho = 0{,}097\ \rho\ N/mm^2 \qquad \text{with } \rho \text{ in } kg/m^3 \quad (8)$$

agrees well with the results of the compression tests reported in Blass et al. (1994) which result in the following characteristic value of the embedding strength:

$$f_{h,k} = 0{,}095\ \rho_k\ N/mm^2 \qquad \text{with } \rho_k \text{ in } kg/m^3 \quad (9)$$

In the following, a value of 0,09 ρ_k is used for the embedding strength $f_{h,k}$.

Connection strength

From the ultimate load and the timber dimensions, the parameter K in equation (2) was determined for each tensile test specimen. From all the values of the parameter K, a characteristic value was then determined as the 5-percentile value. Based on service classes 1 & 2, a specified minimum timber member thickness and a characteristic density of the timber of 350 kg/m^3, the characteristic value of the parameter K was found to be:

$$K_k = 20\ N/mm^{1,5} \tag{10}$$

Based on this value for K_k and a characteristic embedding strength $f_{h,k} = 0{,}09\ \rho_k$ the characteristic load-carrying capacity of a ring or shear-plate connector loaded in tension parallel to the grain is:

$$R_{c,0,k} = \min \begin{cases} 20\ A_s^{0,75}\ (N) \\ 0{,}09\ \rho_k\ d_c\ h_e\ (N) \end{cases} \tag{11}$$

where A_s is the shear area per connector according to Figure 3 and equation (4) or (5) in mm^2.

Limiting values for the member thickness have been introduced since, with small member thicknesses, a splitting instead of a shear block failure mode, or embedding failure, is more likely to occur and consequently the connection strength decreases (Scholten, 1944). The evaluation of the test results is based on a minimum side member thickness of 3 h_e and a minimum middle member thickness of 5 h_e with h_e as defined above.

Although the calculation model which assumes a shear block failure of the wood in front of the connector describes only the behaviour of tension specimens loaded at an angle of up to about 30°, it has been applied to all connector joints with load-grain angles up to 150°. This means that joints loaded at an angle to the grain with a splitting failure mode have also been evaluated on the basis of the assumed shear block failure. The model nevertheless gives fairly uniform results with respect to the 5-percentile value of the parameter K.

This can be explained by the fact that the end distance and the connector spacing similarly influence the ultimate load if splitting is the governing failure mode. In this case an increased end distance obviously increases the area loaded in tension perpendicular to the grain. Only if the end distance becomes very large and the failure mode does not include splitting, can a further increase of connection strength with increasing end distance not be expected.

The results of the tension test evaluation show no indication of an influence of number of connectors for up to three connector units per joint. The same applies to the compression joints where a clear relation between the 5-percentile value of the parameter K and the number of connector units per joint cannot be established. This does not mean, however, that there exists no influence of number of fasteners per joint on the characteristic load-carrying capacity of ring and shear-plate connections. Until further research can clarify the influence of number of connectors, the effective number n_{ef} of more than two connectors in line with the load direction should be assumed as:

$$n_{ef} = 2 + (1 - n / 20)\ (n - 2) \tag{12}$$

where n is the number of connectors in line with the load.

Connection stiffness

For serviceability calculations, as well as for mechanically jointed components, slip moduli of the different types of mechanical timber connections are necessary. For serviceability limit states calculations, the slip modulus K_{ser} corresponds to the slip modulus k_s according to EN 26891. For the design of mechanically jointed components in ultimate limit states, the instantaneous slip modulus K_u is taken as two thirds of the corresponding value of the slip modulus K_{ser}.

EC5: Part 1-1: 5.3.3

Since the stiffness values of the tested connections vary considerably, the influence of different parameters on the connection stiffness is difficult to estimate. Consequently, a simple relation was chosen to represent connection stiffness as a function of the connector diameter and the characteristic density of the timber. The influence of load-grain angle, timber moisture content, member thickness and the number of connector units per joint was neglected. Based on a value of 350 kg/m^3 for the characteristic density, the following average value of the slip modulus k_s according to EN 26891 was determined:

$$k_s = 0{,}6\ d_c\ \rho_k\ (N/mm) \tag{13}$$

where d_c is the connector diameter in *mm* and ρ_k is the characteristic density of the respective strength class in kg/m^3.

Design equations

If equation (11) is applied to a ring or shear-plate connector joint loaded in tension parallel to the grain with a distance to the loaded end $a_{3,t}$ of 2 d_c, a side member thickness of 3 h_e, a middle member thickness of 5 h_e and a characteristic density of the timber of 350 kg/m^3, the characteristic load-carrying capacity per shear plane for those connectors listed in prEN 912 is given by:

$$R_{c,0,k} = \min \begin{cases} 35\ d_c^{1,5}\ (N) \\ 31{,}5\ d_c\ h_e\ (N) \end{cases} \qquad \text{with } d_c \text{ and } h_e \text{ in } mm \tag{14}$$

Disregarding the contribution of the bolt, the characteristic load-carrying capacity of a ring or shear-plate connector joint can be written as:

$$R_{j,\alpha,k} = \frac{R_{c,0,k}}{k_{90}\ \sin^2\alpha + \cos^2\alpha} \tag{15}$$

EC5: Part 1-1: Fig. 6.3.1.2a

where α is the angle between load and grain direction,

$$R_{c,0,k} = \min \begin{cases} 35\ d_c^{1,5}\ k_\rho\ k_{a3}\ k_t\ (N) \\ 31{,}5\ d_c\ h_e\ k_\rho\ k_t\ (N) \end{cases} \qquad \text{with } d_c \text{ and } h_e \text{ in } mm \tag{16}$$

$$k_{90} = 1{,}3 + 0{,}001\ d_c \qquad \text{with } d_c \text{ in } mm \tag{17}$$

For joints with one axis of connectors loaded in compression ($150° \leq \alpha \leq 210°$), only the embedding strength criterion is applicable:

$$R_{c,0,k} = 31{,}5\ d_c\ h_e\ k_\rho\ k_t\ (N) \qquad \text{with } d_c \text{ and } h_e \text{ in } mm \tag{18}$$

For compression joints with more than one axis shear failure between the rings is possible and both conditions of equation (16) have to be verified in this case.

The modification factors for timber density, distance to the loaded end (only for tension joints) and member thickness are defined as follows:

$$k_\rho = \min \begin{cases} 1{,}75 \\ \dfrac{\rho_k}{350} \end{cases} \tag{19}$$

where ρ_k is the characteristic density of the timber strength class in kg/m^3.

For joints loaded in tension only ($-30° \leq \alpha \leq 30°$) a modification factor for end distance may be applied:

$$k_{a3} = \min \begin{cases} 1{,}25 \\ \dfrac{a_{3,t}}{2\ d_c} \end{cases} \tag{20}$$

where $a_{3,t}$ is the distance to the loaded end with a minimum value of 1,5 d_c.

$$k_t = \min \begin{cases} 1 \\ \dfrac{t_1}{3\ h_e} \\ \dfrac{t_2}{5\ h_e} \end{cases} \tag{21}$$

where t_1 and t_2 are the side and middle member thicknesses, respectively, and h_e is the depth of the connector embedment. Equation (21) is applicable only, if t_1 and t_2 are larger than 2,25 h_e and 3,75 h_e, respectively.

Concluding summary

- Ring connector joints are used in laterally loaded timber-to-timber connections while shear-plate connector joints can also be applied in steel-to-timber connections.

- Timber and connector dimensions, spacing, end distances and density are the primary influences on the connection strength.

- Connection stiffness depends mainly on connector diameter and timber density.

- The failure mode of joints loaded in tension is a shear block failure of the wood in front of the connector unless large end distances lead to an embedment failure mode. Joints with load-grain angles between about 30° and 150° show a splitting failure mode of the member loaded perpendicular to the grain. Because of the brittle failure mode and the initial slip of the bolt in its oversized hole, load sharing between bolt and connector is not taken into account.

- Ring and shear-plate connector joints loaded in compression show a combined embedding-splitting failure mode.

References

Blass, H.J., Ehlbeck, J. and Schlager, M. (1994). Strength and stiffness of ring and shear-plate connections. Holz als Roh- und Werkstoff 52: 71-76.

Hilson, B.O. (1969a). The behaviour of softwoods loaded in compression parallel to the grain and supported against lateral movement. Journal of the Inst. of Wood Science 4 (4): 11-23.

Hilson, B.O. (1969b). The ultimate strength of timber joints with split-ring connectors when loaded parallel to the grain. Journal of the Inst. of Wood Science 4 (11): 6-26.

Kuipers, J. and Vermeyden, P. (1964). Research on timber joints in the Netherlands. Rapport 4-64-15, Onderzoek v-7, Stevin-Laboratorium, Technische Hogeschool Delft, Netherlands.

Scholten, J.A. (1944). Timber-Connector Joints - Their Strength and Design. Technical Bulletin No. 865, USDA Forest Service, Washington, D.C., USA.