Timber piles

STEP lecture E18
J-W.G. van de Kuilen
Delft University
of Technology

Objectives

To explain the principles for the design and the calculation of foundations with timber piles.

Summary

This lecture provides background to the design of foundations with timber piles. An introduction is given on the Dutch grading rules for piles and the characteristic strength value of piles. These values can be used in design calculations. Details are given of foundation types used in the Netherlands.

Introduction

Pile foundations are commonly used in areas where the load bearing capacity of the soil is insufficient. In such cases the foundation of the structure can be made of timber piles. The length of the piles varies, but the maximum available length is 23 *m* which is sufficient for most areas in the Netherlands but also for most expected loads. The piles are driven into the ground, in order to transfer the loads of the structure to a stronger soil layer. The piles are naturally tapered with a diameter varying between 300 *mm* at their top, which is directly under the structure to 110 to 160 *mm* at the bottom, which is placed at approximately 1,5 *m* below the upper level of the load bearing soil layer. Details of two foundation types widely used in the Netherlands are shown in Figure 1.

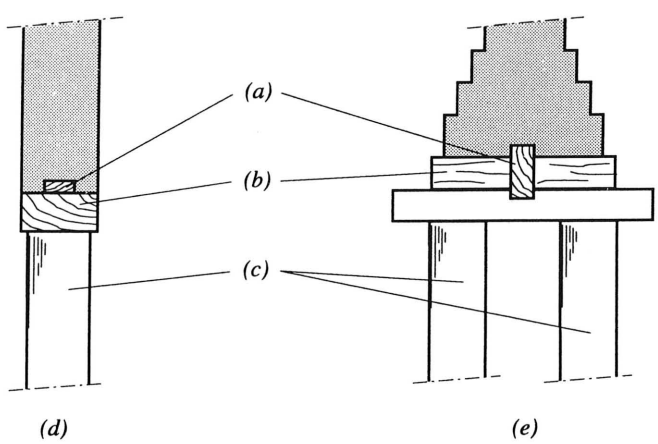

Figure 1 *Two commonly used foundation methods. (a) Shear block, (b) foundation slab, (c) pile head, (d) type traditionally used in Rotterdam, (e) type traditionally used in Amsterdam.*

In many areas where pile foundations are needed ground water is usually present. In those cases the top of the pile must be placed at least 500 *mm* below the lowest expected ground water level. The pile is then always saturated, eliminating the possibilities of decay by fungi. Species which are currently allowed to be used in foundations are Spruce, Larch and Douglas Fir. Pine is not allowed due to the large amount of sapwood, which is susceptible to bacterial deterioration, even under the ground water level. To connect the timber pile with the structure above a concrete extension pile is used. An example of such an extension is shown in Figure 2.

Figure 2 *Concrete extension pile.*

This concrete extension pile bridges the gap between the pile and the structure in order to avoid part of the timber pile being placed above the ground water level. These extension piles have a maximum length of about 4 metres and in general a diameter between 230 and 350 *mm*, although special types with smaller dimensions are also available. The building sequence is as follows. The timber pile is hammered into the ground for most of its length. Before the last metre of the pile is hammered, the concrete extension pile is placed on top of the timber pile and the pile driving is continued until the combination of timber pile and concrete extension is at the required depth. The placement of the concrete slab and the pile driving equipment is shown in Figure 3 and 4.

Figure 3 *A concrete extension pile is placed on top of the timber pile which is already hammered into the ground.*

The concrete extension pile is connected to the concrete foundation slab or the floor of the structure. In Figure 5 the connection between the concrete extension pile and the foundation slab is shown.

The load-carrying capacity of the timber piles in compression as well as the load carrying capacity of the soil have to be determined and a check must be made to ensure that these capacities are sufficient for the design loads. The soil is treated in a similar manner as for other structural material and design rules for the verification of the soil strength should be used. Both ultimate limit states and serviceability limit states must be verified.

Figure 4 *Pile driving.*

Figure 5 *Connection between concrete extension pile and foundation slab.*

The compression strength of timber piles

The compressive characteristic strength of piles has been determined from a sample of 95 specimens cut out of 95 piles. The sample consisted of 57 Spruce, 20 Larch and 18 Douglas Fir pieces. Measured growth characteristics in the specimens were the largest knot diameter, the sum of knot diameters and the sum of knot diameters divided by the circumference. Furthermore all specimens were tested in wet condition in accordance with practice. The strength of the Spruce specimens was a little lower than the strength of the Douglas Fir, which in turn had a little lower strength than the Larch specimens. Since the differences were small, and the main species used is Spruce it was decided to derive one characteristic value, only based on the Spruce subsample. A statistical analysis did not show any correlation between the measured growth characteristics and the compression strength. The characteristic compression strength value in wet condition was determined to be 16,3 N/mm^2. Hence, only the modification factors for load duration need to be applied. This results in the design strength values given in Table 1, based on $\gamma_M = 1{,}3$.

The design compression strength of the pile is checked at a level of 1,5 metres above the pile tip, which is supposed to be at least the length over which the pile should be driven into the load bearing layer. The strength verification of the soil is done at the pile toe.

Load duration class:	k_{mod}	$f_{c,0,d}$ (N/mm^2)
Permanent	0,60	7,5
Long-term	0,70	8,8
Medium-term	0,80	10,0
Short-term	0,90	11,3
Instantaneous	1,10	13,8

Table 1 Design compression strength values of timber piles.

The values in Table 1 are valid for single piles. Depending on the final situation in the structure these values can be increased. A group of piles under one foundation block will act as a unit. If one pile starts to fail in compression the stiffness of that pile reduces and load is redistributed to the other piles under the foundation block, provided the stiffness of this block is high enough. In that case the piles will act as a parallel structural system and a load sharing factor can be applied in the design. According to the Dutch design code NEN 6743 "Geotechnics - Calculation method for bearing capacity of pile foundations - Compression piles", the minimum number of piles acting together under a foundation block is three. For that minimum case the load sharing factor was found to be 1,1.

The quality of timber piles

The quality of timber piles is regulated in a special standard, the Dutch NEN 5491:1983 "Quality requirements for timber piles". This standard regulates that only Spruce, Larch and Douglas Fir as species are allowed where a batch of spruce may contain both Spruce (Picea abies) and Fir (Abies alba). Since no relationship could be found between growth characteristics and strength the quality requirements are not very strict where growth characteristics are concerned. The major restriction on knots is that the knot area, the sum of knot diameters divided by the circumference, must be smaller than 0,5 and that the maximum permitted diameter of a knot is 1/12 of the circumference or 50 *mm*. Other restrictions relate to curvature, with a maximum deviation in the middle of the pile of half of the middle diameter, and fissures. Additionally permissible deviations of sizes are given for both circumference and length of the piles.

Ultimate limit state design of the soil

In order to make a design for a foundation the composition and load bearing capacity of the soil must be studied. Normally this is done by means of cone penetration tests (CPT) where a cone is pressed into the ground and the resistance is measured. This resistance can be used to derive the load carrying capacity of the soil. With special equipment not only the cone resistance is recorded but also the skin friction of the soil. This friction gives information on the forces which can act on the pile shaft. These forces on the shaft can be either positive or negative. A positive skin friction contributes to the load carrying capacity of the pile, since the vertical loads can now be transferred both through friction and through normal forces at the pile toe. On the other hand if the soil layers decrease in thickness over the years due to settlement, or a sand layer is put on top of the soil, the positive skin friction can become negative. This decreases the load carrying capacity. This latter possibility is sometimes not accounted for, leading to damage to the structure.

If a study of the soil is performed, the results of that study are treated in a similar manner as any other building material. The design code for geotechnics (NEN 6740) is written as any other load and resistance factor design code. The maximum design strength of the soil is calculated as follows:

$$F_{found;m;d} = \xi \frac{F_{found;m;rep}}{\gamma_{m;p}} \quad (1)$$

where:

$F_{found;m;rep}$ is the maximum characteristic value of the soil determined from the cone penetration tests,

$F_{found;m;d}$ is the design maximum value of the soil,

ξ is a factor taking into account the number of CPT's which have been performed. In most cases is $\xi \approx 0{,}8$,

$\gamma_{m;p}$ is the material factor which is 1,25 in case the soil strength is determined by means of cone penetration tests.

The Dutch design code takes into account the number of CPT's. If more CPT's have been performed the actual load carrying capacity is better known and thus higher loads may be applied on the foundation, or fewer piles are needed. Based on these tests the load carrying capacity can be determined giving the necessary length of the pole. The result of the CPT can be used to determine the ultimate load carrying capacity of the soil layer in which the pile toe is to be placed. One method to calculate this strength is called the Koppejan - de Beer rule. This rule provides a safe estimate of the load carrying capacity of the soil and can be found in the Dutch standard NEN 6743 Geotechnics - Calculation method for bearing capacity of pile foundations - Compression piles. The maximum design force (N) can now be calculated by multiplying this strength value by the area of the pile toe.

The positive skin friction is calculated as:

$$f_{skin;m;rep} = \alpha \, q_c \quad (2)$$

where α is a constant for a given soil and q_c is the cone resistance in N/mm^2 with an upper limit value.

The maximum skin friction is calculated as the sum of the skin friction over the circumference of the pile and the length in the soil over which skin friction is acting.

In general these design calculations are not done by the structural engineer of the building but by geotechnical engineers who are specialized in the design of foundations and who carry out cone penetration tests.

The final scheme of a foundation, including the forces which may act on the pile is shown in Figure 6.

Serviceability limit state design

For structures with a high stiffness deformation criteria have to be set. This means that the deflection of the top of the pile must be determined. If all piles under the same foundation element do not have the same deflection, damage may occur in the building. Relatively harmless damage occurs when doors can no longer be opened or closed. More harm is done when cracks in masonry

walls occur, which may lead to disintegration of (parts of) the structure. Since a total description of the phenomenon is not appropriate here, reference is made to the Dutch standard NEN 6743 "Calculation method for bearing capacity of pile foundations - Compression piles". The principle of the determination is that the deflection at ground level consist of two parts. The first part is the deflection of the top of the pile due to the elasticity of the pile and the penetration of the pile toe in the soil. For this an average force in the pile is determined based on the ratio between skin friction and normal force at the pile toe. The second part is the displacement of the whole pile due to settlement of the layers under the pile.

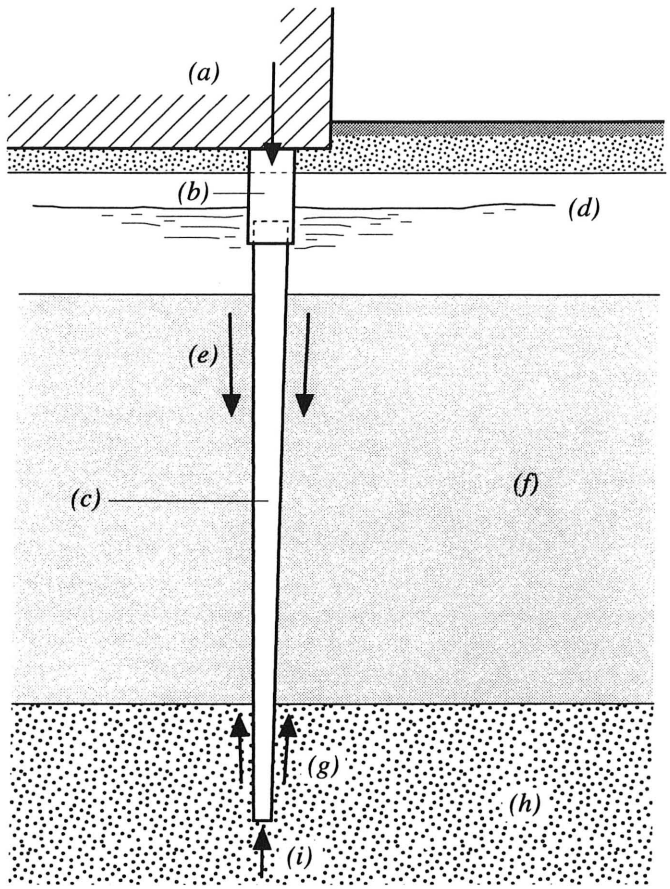

Figure 6 *Forces acting on the timber pile after the structure is completed. (a) Structure, (b) concrete extension pile, (c) timber pile, (d) ground water level, (e) negative skin friction, (f) weak clay, (g) positive skin friction, (h) load bearing sand layer, (i) pile toe resistance.*

Design example

The structure of Figure 6 is taken as an example. The pile toe is placed 13,5 *m* below surface level. The vertical design load F_d is permanent and is 100 *kN*. The design strength of the timber pile for load duration class permanent is 7,5 N/mm^2.

The pile diameter is 140 *mm*. A_c = 15400 mm^2.

The load bearing capacity of the pile consists of the summation of the pile toe resistance and positive skin friction. Positive skin friction is acting over 2,1 *m*. The average pile diameter over this 2,1 *m* is 148 *mm*. There is no negative skin friction to be accounted for. $\xi = 0{,}8$.

Verification of the soil strength:
The strength value of the soil at the pile toe is determined by the geotechnical engineer:

$$f_{toe;m;rep} = 9{,}75\ N/mm^2$$

The design load carrying capacity at the pile toe becomes:

$$R_{toe;m;d} = \xi \frac{f_{toe;m;rep}\ A_{toe}}{\gamma_{m;p}} = 0{,}8 \cdot \frac{9{,}75 \cdot 15400}{1{,}25} = 96\ kN$$

The skin friction can be added to this value: the average cone resistance over 2,1 meters is 7 N/mm^2.

Using Equation (3) the skin friction is found:

$$f_{skin;m;rep} = \alpha\ q_c = 0{,}012 \cdot 7 = 0{,}084\ N/mm^2$$

and the design value of the load carrying capacity of the skin resistance is:

$$R_{skin;m;d} = \frac{\pi \cdot 148 \cdot 2100 \cdot 0{,}084}{1{,}25} = 66\ kN$$

The total design load bearing capacity of the soil now becomes:

$$R_d = R_{toe;d} + R_{skin;d} = 96 + 66 = 162\ kN > 100\ kN$$

Verification of pile compression strength:
The diameter $A_c = 15400\ mm^2$.
The compression stress is now:

$$\sigma_{c;d} = \frac{F_d}{A_c} = \frac{100 \cdot 10^3}{15400} = 6{,}5\ N/mm^2 < 7{,}5 N/mm^2$$

A pile toe diameter of 140 *mm* is sufficient to carry the design load.

Concluding summary

- Timber piles are available with a length up to 23 *m* and are a good alternative to foundations with concrete piles.

- Three species are allowed for timber piles (Spruce, Douglas Fir and Larch). Care must be given to situations where the ground water level may change for which special concrete extension piles are developed.

- The characteristic strength value of timber piles has been determined based on 95 compression tests and the verification of the strength according to the EC5 is given.

- An introduction is given to the quality requirements on timber piles. A Dutch standard contains the requirements on allowable defects and permissible deviations from preferred sizes.

References

NEN 5491:1991 Quality Requirements for Timber - Timber Piles.

NEN 6740 Geotechnics - Basic requirements and loads.

NEN 6743 Geotechnics - Calculation method for bearing capacity of pile foundations - Compression piles.