CRANFIELD ASTROBIOLOGICAL STRATOSPHERIC SAMPLING EXPERIMENT (CASS•E): OVERVIEW OF FLIGHT HARDWARE CONFIGURATION, IMPLEMENTED PLANETARY PROTECTION AND CONTAMINATION CONTROL PROCEDURES AND PRELIMINARY POST-FLIGHT RESULTS

C. M. Juanes-Vallejo [(1)], V. V. Grama[(2)], I. Katramados[(3)], L. Naicker[(4)], C. C. Rato[(5)], C. Rix[(6)], E. Sánchez-Camilo[(7)], M. R. Patel[(8)], D. C. Cullen[(9)]

[(1)]Cranfield Health, Cranfield University, MK43 0AL, UK. Email: c.juanesvallejo@cranfield.ac.u.
[(2)]Cranfield Health, Cranfield University, MK43 0AL, UK. Email: vinay.gv@gmail.com
[(3)]Cranfield Health, Cranfield University, MK43 0AL, UK. Email: i.katramados@cranfield.ac.uk
[(4)]Cranfield Health, Cranfield University, MK43 0AL, UK. Email: lolan.naicker@physics.org
[(5)]Cranfield Health, Cranfield University, MK43 0AL, UK. Email: carla.rato@cranfield.ac.uk
[(6)]Cranfield Health, Cranfield University, MK43 0AL, UK. Email: c.rix@cranfield.ac.uk
[(7)]Cranfield Health, Cranfield University, MK43 0AL, UK. Email: edwinsanchez@gmail.com
[(8)]The Open University, MK7 0AA, UK. Email: m.r.patel@open.ac.uk
[(9)]Cranfield Health, Cranfield University, MK43 0AL, UK. Email: d.cullen@cranfield.ac.uk

ABSTRACT

CASS•E is an experiment that is the initial part of a program aimed at collecting direct evidence of microorganisms in the Earth's stratosphere. The experiment was launched on-board a stratospheric balloon in collaboration with Eurolaunch through the BEXUS (Balloon-borne EXperiments for University Students) program from Esrange, Sweden, in October and November 2010. It consisted of a pump which drew air from the stratosphere through inlet tubes and collected samples on a particle collection filter located inside an Ultra Clean Zone. Due to the low density of microbes in the stratosphere compared to the known levels of contamination present during ground handling, the experiment incorporated Planetary Protection and Contamination Control (PP&CC) protocols in its design and construction in order to minimise the chance that any microbes detected were ground derived contamination. Space community derived cleaning and sterilisation techniques were employed throughout Assembly Integration and Testing (AIT) as well as bio-barrier mechanisms which were designed to open only in the stratosphere to prevent re-contamination of the instrument after sterilisation. The material presented in the paper covers the design, AIT and preliminary post-flight results of CASS•E. The objective of this initial implementation and the first flights was to better understand the issues of incorporating PP&CC and additional features to control and understand contamination into a balloon platform and thereby inform future experiments rather than perform a definitive collection of stratospheric samples for life detection.

1. INTRODUCTION

The study of life in extreme environments on Earth, including the stratosphere, contributes to our understanding of the possibility of life elsewhere in the Universe. Previous balloon experiments to attempt collection of microbial life in the stratosphere have addressed, to varying levels, the issue of contamination with non-stratospheric microorganisms that may occur pre- and post-stratospheric flight phases [2, 3]. However, it has proven difficult to convince the wider scientific community that resultant claims of stratospheric life collection are not simply ground or other tropospheric derived contamination.

A similar concern about Earth-derived microbial contamination in life detection experiments and spacecraft for planetary exploration missions has lead to the development of Planetary Protection and Contamination Control (PP&CC) protocols to address these concerns; *i.e.* to minimise the potential for contamination during build, assembly, verification and handling of instrumentation and spacecraft. Examples of protocols include thorough cleaning to minimise the level of contamination with viable microorganisms (termed 'bio-burden'), measurement of the achieved level of bio-burden and then followed by the use of Dry Heat Microbial Reduction (DHMR) by heating items under controlled humidity (< 1.2 g/m^3 water) for a given length of time. The time and temperature required in order to achieve a x10^4 to x10^6 reduction in bio-burden vary depending on the nature of the item to be sterilised. Therefore, such protocols are intended to achieve a final level of bio-burden that is compatible with a given acceptable risk of contamination [4, 5].

A critical aspect of the use of PP&CC protocols are approaches to maintain, after treatment, the achieved levels of bio-burden whilst performing subsequent pre-flight handling and the flight of the experiment or spacecraft. Physical barrier approaches to stop re-

Proc. '20th ESA Symposium on European Rocket and Balloon Programmes and Related Research'
Hyère, France, 22–26 May 2011 (ESA SP-700, October 2011)

contamination with microorganisms are often called 'bio-barriers'.

The Cranfield Astrobiological Stratospheric Sampling Experiment (CASS•E) used the BEXUS stratospheric balloon platform to attempt a first implementation of a stratospheric particle detection experiment that included space-sector developed PP&CC protocols as well as additional features to control and understand contamination. The hypothesis for this study is that the implementation of space-sector developed PP&CC protocols and related design approaches to stratospheric balloon experiments will help to convince the majority of the scientific community that any detected microorganisms are unlikely to be ground or other tropospheric derived contamination. Specifically, CASS•E implemented various cleaning steps followed by DHMR of parts of the experiment that would be in contact with the collected sample; these constituted the 'Ultra Clean Zone' (UCZ) of the experiment and which included use of a bio-barrier mechanism to stop re-contamination of the UCZ until breaching of the bio-barrier in the stratosphere.

The objective of the initial implementation and the first flights reported here was to better understand the issues of incorporating PP&CC and additional features to control and understand contamination in stratospheric particle collection experiments rather than a definitive collection of stratospheric samples for life detection. The material presented in the paper gives an overview of the design, AIT and preliminary post-flight results of CASS•E.

2. EXPERIMENT OVERVIEW

CASS•E comprised an experiment using diaphragm vacuum pumps to pull stratospheric air through 0.2µm pore-size particle filters to collect stratospheric particles. Basic design requirements required operation under stratospheric and other flight conditions including pressure ≥ 10mbar, temperature ≥ minus 90°C, autonomous operation capability and ability to survive 10g deceleration. In order to build redundancy into the system, as well as offer the potential of two semi-independent measurements, a two channel sampling system with two collection filters was included, with an additional third 'control' channel (consisting of identical inlet valve, tubing and filters as the sampling lines, but not connected to a pump) acting as a 'flight control'. Furthermore, the redundancy approach lead to the use of cross-linked flow paths in case of a single pump failure (Figure 1).

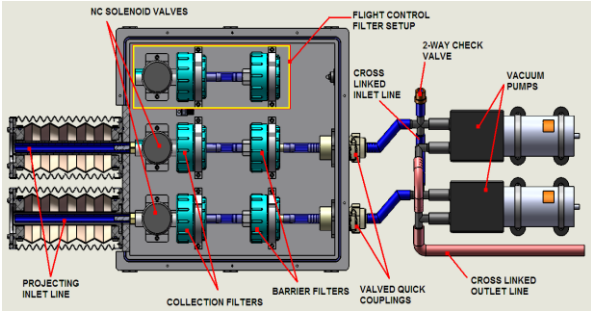

Figure 1. The sampling line

Design features and protocols to address contamination concerns included:

- Use of Dry Heat Microbial Reduction (DHMR) after cleaning to introduce $\geq 10^6$ fold reduction in microbial contamination.
- An Ultra Clean Zone (UCZ) sub-system concept to (i) house only those components and systems that required DHMR and thus reducing the burden on the majority of component selection and (ii) maintenance of post-DHMR levels of contamination.
- Inclusion of bio-barrier mechanisms (based upon one of the approaches investigated for the robotic arm on the NASA Phoenix Lander [6], where the bio-barrier was covered using Tyvek® breached by a burn-wire and retracted via tension springs) to maintain post cleaning and DHMR levels of contamination of the sampling mechanism until barrier breaching in the stratosphere.
- Use of ATP bioluminescence assays as a rapid method to assess progress and efficiency of cleaning.
- Use of µm-sized fluorescent beads (to mimic microorganisms) to contaminate various experiment components as a positive control for the presence of microbial contamination pathways.

The choice of pumps reflected the objectives of the work reported here, namely the flow rates achievable using commercial-off-the-shelf pumps compatible with the size and mass restrictions of the BEXUS platform opportunity [1], and the expected number densities of microbes in the stratosphere [2, 3] made it unlikely that a statistically significant collection of stratospheric microorganisms would be made. Hence the primary intention of the current experiments to inform future larger versions of the experiment that would incorporate PP&CC protocols and related features to allow a definitive collection of stratospheric samples for life detection.

The total weight of the experiment was approximately 25 kg and it occupied a volume of 675 x 347 x 337mm (840 mm in length with inlet bio-barrier).

The experiment was mounted on the gondola of the BEXUS-10 stratospheric balloon during the October 2010 launch and it rose to an altitude of approximately 24 km, floating at this altitude for 2.5 hours. On the other hand, during the November 2010 flight on-board BEXUS-11, it reached approximately 33 km and floated for 2 hours. After the float phase, the tether holding the gondola to the balloon would be severed and the gondola would then descend to ground using a parachute.

For experimental controls, in addition to the flight control filter, two shipping controls were included with the ground transportation of CASS•E and which comprised collection filters sealed inside filter holders and subjected to DHMR treatment in order to assess whether contamination had been introduced during transportation. Similar storage control was also prepared and kept at Cranfield University for the duration of the mission to check for contamination solely due to pre-shipping and post-return handling.

3. EXPERIMENT FLIGHT HARDWARE AND CONFIGURATION

The experiment employed a volumetric filtration technique to sample stratospheric air. Air was drawn through 0.2 µm pore-size Millipore GSWP047 mixed cellulose membrane filters by two BOXER® 7502 diaphragm pumps cross-linked for redundancy. Diaphragm pumps are positive displacement pumps and have the advantage of introducing minimal contamination into the sample line compared to oil-based pumps.

The experiment was divided into two zones: the sterile or Ultra Clean Zone (UCZ) and the non-sterile zone. The UCZ consisted of components that were in direct contact with the sampled stratospheric air. The bio-barriers, filters, tubing, valves and accessories were within this zone. The components in the sterile zone had to comply with rigorous cleaning and sterilisation procedures [7, 8].

The risk of failure of the inlet solenoid valves was minimised in the design by incorporating two sample collection lines. Each projecting inlet line was connected to the collection filters and protected from external contamination by a separate bio-barrier as shown in Figure 2. A normally closed 100P2NC12-06S Bio-Chem Fluidics™ solenoid pinch valve, mounted on each inlet line before the sample collection filter, provided a second barrier to external contamination. The sample collection filters were connected to barrier filters that prevented back-contamination from the pumps. Each pump inlet port was connected to the barrier filter via a quick release coupling, allowing the UCZ to be independent and thus easily replaced with a flight spare. The valves, filters and tubing were all housed within a sealed aluminum box as shown in Figure 2.

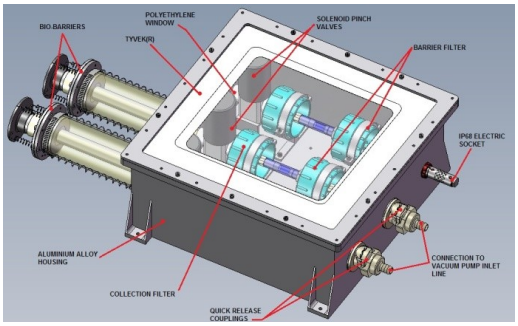

Figure 2. CAD representation of the CASS•E Ultra Clean Zone (UCZ). Note that only the control line (top) and the second sample collection line (bottom) are shown. The first sample collection line is hidden from this view under the Tyvek® cover.

3.1. Bio-Barrier Design

The inlet bio-barriers shown in Figure 3 were critical bespoke components that had to be designed and tested appropriately for reliable functioning. Each inlet tube projecting out of the UCZ was covered by a bio-barrier as this duplication provided the redundancy necessary to ensure that the experiment did not fail to meet its objectives due to the malfunction of one bio-barrier.

The inlet bio-barriers were an extension of the UCZ and had two main functions:

- To prevent re-contamination of the projecting inlet tubing after cleaning and sterilization.
- To provide the UCZ with controlled access to stratospheric air.

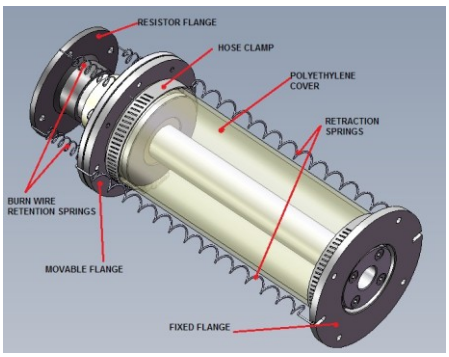

Figure 3: CAD representation of the revised bio-barrier design flown on BEXUS-11

Two Tyvek® "sealing" discs sealed the front of the inlet piping against contamination. Due to the gas permeability of Tyvek®, essentially allowing it to act as a sterile filter, any over-pressure or vacuum condition that may have occurred in the tube space leading to the inlet valves was prevented. This reduced the risk of air

ingress to the filters under a closed inlet valve condition and changing altitude. Two springs provided pre-tension which allowed the Tyvek® sealing discs, mounted within the outer movable flange, to rest on the end of the protection pipes. All flanges were made of 304 stainless steel. The Tyvek® sealing discs were ruptured using a burn-wire to allow access to air at stratospheric altitude. This burn-wire was constructed from a set of eight 1.5 Ω resistors connected in series and arranged in a circular pattern. A power of 12 V and 0.8 A was supplied to the burn-wire allowing it to burn a hole in the Tyvek® sealing discs within two minutes (as tested at the combined conditions of -3°C and 0.5kPa), thereby breaching the UCZ. For the actual flight on BEXUS-11, five minutes were allowed for each bio-barrier burn. This part of the UCZ was protected with a temporary "remove before flight" cover, to prevent damage during handling and transport.

The design of the bio-barrier aimed to minimise the risk of contamination after bio-barrier opening by retracting the movable flange back and away from the collection tubes. The tubing protruded in the current implementation 120 mm from the edge of the gondola; however, ideally, longer tubes would have been preferred to reduce the risk of contamination from the gondola itself. Previous balloon experiments have used tubing that protruded as much as 2 m from the edge of the gondola [9] but this was not possible on the BEXUS balloon platform [1].

4. IMPLEMENTED PP&CC PROCEDURES

4.1. Cleaning and Sterilisation

For the CASS•E experiment it was important that the presence of both viable and dead (non-viable) microorganisms inside the UCZ be minimised as the post-flight detection methods used on the filters may not discriminate between the two. This minimisation was achieved by cleaning and sterilisation. Cleaning is a physical and/or chemical process that reduces bio-burden levels -removing both viable and non-viable organisms, whereas sterilisation is a process that reduces the levels of viable organisms but without necessarily removing the resultant non-viable organisms.

The cleaning method of choice for CASS•E was immersion and washing in 70% Iso-Propyl Alcohol (IPA) with sonication, which reduces bio-burden through the physical process of immersion and sonication as this is a well established approach adopted throughout the space engineering community. Where components were incompatible with IPA immersion, wiping with IPA soaked wipes was used as an alternative technique. All components within the UCZ were cleaned by either IPA immersion or wiping, prior to the sealing of the UCZ. Design choices were made such that all components within the UCZ were compatible with IPA immersion or wiping.

Similarly to cleaning, there are a number of sterilisation techniques available, but DHMR is the only technique that has been qualified by NASA and therefore is chosen for the current study. DHMR involves heating of components under controlled humidity (< 1.2 g/m^3 water) for a given length of time. Since there was free exchange of air between the UCZ and the atmosphere (filtered through the Tyvek® cover sheet), the surfaces inside the UCZ were considered as free or mated and so the time-temperature regime required for a 10^4 reduction of bio-burden was 110°C for 32 hours. In order to ensure the efficiency of the sterilization procedure, temperature and humidity profiles were recorded during the sterilisation.

In order to ensure the minimum possible level of contamination and to maintain cleanliness post-sterilisation, it was essential that the AIT process for the UCZ be conducted within a cleanroom. A further level of protection was introduced through the use of a laminar flow cabinet within the cleanroom for handing UCZ components. All handling and integration of UCZ components were carried out inside a HEPA filter equipped horizontal laminar flow cabinet inside an ISO8 (Class 100 000) cleanroom situated at Cranfield University.

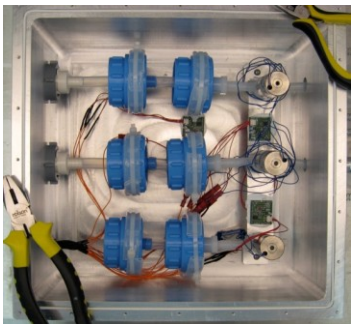

Figure 4. UCZ interior during assembly within the Cranfield University cleanroom. The sample collection filter line 1 (top), sample collection filter line 2 (centre) and control line (bottom) can be seen.

The UCZ was not breached until activation of the bio-barriers after the BEXUS balloon had ascended to the stratosphere. The flow-path of the sampled air, including the tubing and the collection filters, was re-sealed prior to the descent phase of the balloon by closing the inlet valves. This protected the collected sample from contamination during landing and transportation, from the landing site in Finland to the cleanroom in Cranfield University, UK.

4.2. Rapid Assessment of Cleaning Efficiency

It is necessary to verify that the cleaning procedures implemented had been successful and there are a number of methods by which this could be achieved. The standard method used in the space exploration community is swabbing and culturing, where surfaces are swabbed and the cells collected on the swabs are extracted and then cultured following a standard protocol [10]. The drawback of this method is the time involved in culturing, *i.e.* an analysis time of days meaning that timely feedback to the AIT process is not possible. A method that has been proposed to allow rapid feedback to the AIT process is adenosine triphosphate (ATP) bioluminescence assays. Critically, assay times are minutes and lower limits of detection can reach a few hundred cells. It is important to realise that such a method at present is used simply as rapid indicator of gross level of contamination and reduction during cleaning and does not replace the culture based techniques as the definitive method to assess bio-burden levels -for example the ATP bioluminescence approach is poorly suited to the detection of microbial spores. In the current study only rapid ATP bioluminescence measurements were made and will be reported elsewhere. Spore count analyses were not performed.

4.3. Positive Control for Pathways of Contamination

To better understand contamination pathways, a positive control for the presence of contamination pathways was implemented. Various micrometer and sub-micrometer diameter fluorescent polymer beads were used as readily detectable (via fluorescence microscopy) proxies of microorganisms [11]. Separate populations of size and differing fluorescent dyes enabled different parts of the instrument and balloon to be deliberately contaminated with uniquely identifiable beads. The appearance of a particular type of the bead (dye and size) on a particle collection filter would allow identification of what surface the contamination came from and therefore a potential contamination pathway for microorganisms from the same surface. Beads were suspended in a volatile solvent and sprayed using an aerosol system onto various surfaces of the instrument. For the present work a limited set of beads were used comprising different colored fluorescence (red and green) as well as different size (1 µm and 0.2 µm). The detection of beads post-flight was via fluorescence microscopy of the particle filters and with corroboration via scanning electron microscopy (only using size and shape information).

5. FLIGHT AND INITIAL RESULTS

CASS•E was flown twice on a stratospheric balloon through the BEXUS (Balloon-borne EXperiments for University Students) program from Esrange, Sweden. In October 2010 CASS•E flew to a height of 24km on-board BEXUS-10 but experienced a malfunction of the bio-barrier mechanism (failure to open). It flew again in November 2010 on-board BEXUS-11 to a height of 33km and with a revised bio-barrier mechanism that opened successfully. The UCZ was recovered from the BEXUS-11 flight and transferred to the cleanroom at Cranfield University where it was externally de-contaminated and the sample collection filters were recovered.

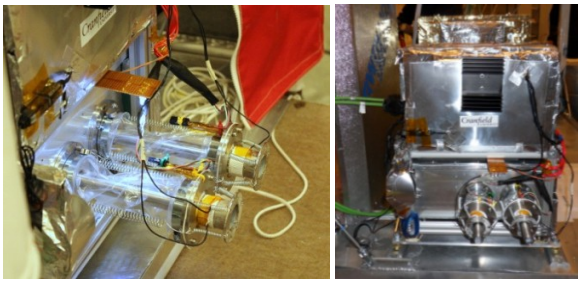

Figure 5. (Left) Close-up of closed bio-barriers pre-launch with CASS•E mounted on balloon gondola. (Right) CASS•E in gondola post-recovery with bio-barriers open -seen in lower right of image.

The preliminary findings from initial analysis of the sample collection filters are given in Figure 6. Fluorescent analysis yielded evidence of low numbers of 1 µm diameter fluorescent beads on the sample collection filters indicating that pathways for microbial contamination from other parts of the experiment/balloon existed. SEM analysis of the filters also confirmed the presence of 1 µm diameter beads assumed to be fluorescent beads and also particles other than fluorescent beads identified by size and shape (Figure 6).

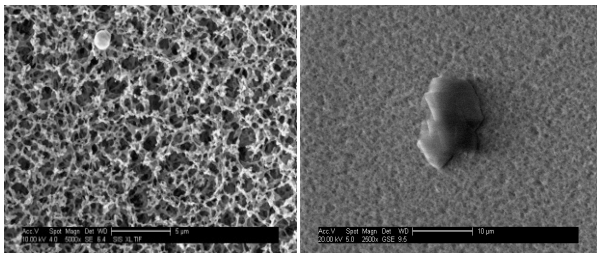

Figure 6. (Left) SEM image of a of 1µm dia. fluorescent bead on sample collection filter, see top centre-left of image. (Right) SEM image of ~10µm dia. particle on sample collection filter.

The implication of finding fluorescent beads on the sample collection filter is that a contamination pathway existed during the mission that enabled the fluorescent beads to migrate from a non-cleaned/sterilised surface to the filter; therefore demonstrating that a similar pathway for microbial contamination was present. Without the results of on-going analyses it is unclear at

the time of writing where this occurred during the mission.

6. CONCLUSIONS

A stratospheric particle collection experiment, that includes a number of novel features, has been built and flown on a stratospheric balloon. The key features are those intended to address concerns of the wider scientific community that any collected microorganisms are likely to be ground based contamination. Features adopted from the space-sector to minimise microbial contamination were: the use of Dry Heat Microbial Reduction, the use of bio-barrier mechanisms, Ultra Clean Zone sub-systems and rapid contamination monitoring during cleaning and assembly by ATP bioluminescence assays. A key feature was the inclusion of a positive control comprising deliberate contamination of parts of the experiment with µm-sized fluorescent beads as proxies of microorganisms. Any appearance of fluorescent beads on the sample collection filters would indicate that a contamination transfer pathway existed.

The second flight of CASS•E allowed the collection of stratospheric samples but the post-flight finding of fluorescent beads on the sample collection filters demonstrated that a contamination pathway was present. Therefore this feature allowed a clear interpretation of the experiment, *i.e.,* that contamination did occur, which would not have been achievable without the presence of fluorescent beads. Further studies will (i) clarify the specific contamination pathways seen including more detailed analysis of the sample filters and various control filters, (ii) develop further the use of positive controls for the presence of microbial contamination pathways and (iii) a 2nd generation of CASS•E incorporating lessons learned and increased sample collection capacity.

7. ACKNOWLEDGEMENTS

Dr Peter Roberts, Dr Jenny Kingston and Mr David Pitts (Cranfield University) for their support and advice throughout the various stages of the project. Marjorie Allen, David Titmus, Tom O'Brien and Rita O'Brien (Cranfield University) for their assistance in preparing the cleanroom facilities. Dr Xianwei Lin (Cranfield University) for his support with use of the SEM facilities. Naomie Stanford-Jones (Cranfield University) for support with press releases. Cranfield University for providing laboratory, cleanroom and workshop facilities. Dr Manish Patel and Dr Tim Ringrose (The Open University) for providing access to thermal-vacuum testing and DHMR facilities and Dr Judith Pillinger (The Open University) for guidance concerning Planetary Protection and Contamination Control protocols. Mr Winston Waller (University of Kent) for help with electronics design and especially Koen Debeule (ESA) and Antonio Selmo (University of Padova) for electronics support during the BEXUS-10 flight campaign. Other BEXUS and REXUS instrument teams and personnel, for supporting us by providing advice, giving feedback, making suggestions and taking an interest in the CASS•E experiment. The European Space Agency (ESA), the German Aerospace Centre (DLR), the Swedish National Space Board (SNSB), the Swedish Space Corporation and Eurolaunch for providing the CASS•E flight opportunities as part of the REXUS/BEXUS program. Finally a special thanks to industrial sponsors for donating components and providing technical support; including: U-blox, Alphamicro, Westfield Medical, Aigis Mechtronics, Taoglas, Uno International, DuPont, Lantronix, Microchip, Maxim, Armacell, ITT, Biocontrol, Guardline and Igus.

8. REFERENCES

[1] O. Persson et al., BEXUS User Manual, Eurolaunch Document ID: RXBX-BEXUS user manual-v6, 2009.

[2] J.V. Narlikar, D. Lloyd, N.C. Wickramasinghe, M.J. Harris, M.P. Turner, S. Al-Mufti, M.K. Wallis, M. Wainwright, P. Rajaratnam, S. Shavaji, G.S.N. Reddy, S. Ramadurai, F. Hoyle, A Balloon experiment to detect microorganisms in the Stratosphere, Astrophysics and Space Science 285 (2003) 555-562.

[3] D. Griffin, Terrestrial microorganisms at an altitude of 20,000 m in Earth's atmosphere, Aerobiologica 20 (2004) 135-140.

[4] C. Moissl, S. Osman, M.T. La Duc, A. Dekas, E. Brodie, T. DeSantis, K. Venkateswaran, Molecular bacterial community analysis of cleanrooms where spacecraft are assembled, Microbial Ecology (2007).

[5] ESA, Doc. EXM-MS-TNO-Al-0128, Issue 01, 2008.

[6] Y. Salinas, W. Zimmerman, E. Kulczycki, S. Chung, T. Cholakian, Bio-barriers: Preventing forward contamination and protecting planetary astrobiology instruments, IEEEAC paper no 1216, Version 1, 2006.

[7] Planetary protection provisions for robotic extraterrestrial missions, NASA Procedural Requirements 8020.12C, NASA, 2001.

[8] Exomars planetary protection training program, EX-MS-TNO-AI-0128, ThalesAlenia Space, 2009.

[9] M. Wainwright, N.C. Wickramasinghe, J.V. Narlikar, P. Rajaratnam, Microorganisms cultured from stratospheric air samples obtained at 41 km, FEMS Microbiology Letters 218 (2003) 161-165.

[10] NASA standard procedures for the microbial examination of space-hardware, Procedures and Guidelines (NPG) 5430.1B, NASA, 1980.

[11] E. Monaghan, Protocol development for the assessment of bio-burden levels of small space-instrument components for life detection during planetary exploration, MSc Thesis, School of Engineering, Cranfield University, 2009.