MINUTES OF MEETING
OF
BOARD OF DIRECTORS

THE STATE OF TEXAS	§
	§
COUNTY OF TRAVIS	§
	§
BELVEDERE MUNICIPAL UTILITY DISTRICT	§

A regular meeting of the Board of Directors of Belvedere Municipal Utility District was held on May 15, 2018, in accordance with the duly posted notice of said meeting. The roll was called of the members of the Board of Directors, to-wit:

Peter Golde	President
Donal Sartain	Vice President
Ronald Ubertini	Secretary/Treasurer
Kim Clifford	Assistant Secretary
James Koerner	Assistant Secretary

All members of the Board were present, except for Directors Sartain and Ubertini, thus constituting a quorum of the Board of Directors. All directors present voted on all matters that came before the Board. Also in attendance were Jeff Monzingo with Montoya & Monzingo, LLP; Stefanie Albright and Troupe Brewer, Attorneys, and Lissette Ruiz, Legal Assistant, with Lloyd Gosselink Rochelle and Townsend, P.C., and; David Malish with Murfee Engineering Company. Tom Wiles was present on behalf of the Belvedere Homeowners Association (HOA), as was Autumn Phillips on behalf of Municipal Accounts and Consulting.

Director Golde called the meeting to order at 6:00 p.m. and stated the Board would first receive public comment. No public comments were received.

Next, Director Golde stated the Board would discuss, consider, and take action to approve the minutes of the April 17, 2018 regular meeting, provided as **Exhibit A**. Directors Koerner and Golde recommended minor edits to pages two and three. **Upon motion by Director Koerner, seconded by Director Clifford, and unanimously carried by the Board members present, the Board approved the April 17, 2018 regular meeting minutes, as amended.**

The next item before the Board was to consider the bookkeeper's report, including, but not limited to, payment of invoices. Mr. Monzingo addressed the Board and reviewed the Bookkeeper's report, provided as **Exhibit B**. In review of the budget versus actual, Mr. Monzingo noted the budget for legal and engineering were over budget and the budget for solid waste disposal was slightly over budget. Director Clifford noted that Kim Bigley was aware of a company Associa employed to reduce solid waste disposal fees. Director Koerner volunteered to follow-up with Ms. Bigley on the path forward regarding disposal fees. Director Clifford asked about the line item for the newly established District operating reserve, to which Mr. Monzingo stated he would revise the report to indicate that line item going forward. **Upon motion by Director Koerner, seconded**

by Director Clifford, and unanimously carried by the Board members present, the Board approved the Bookkeeper's Report, transfers, and payment of invoices.

Director Golde stated the Board would next discuss, consider, and take action to interview and engage a new District Bookkeeper. Director Koerner introduced Ms. Autumn Phillips with Municipal Accounts and Consulting (MAC). Ms. Phillips provided background information on her firm and noted they offered a dedicated investment team to manage funds for all of their clients. The Board had questions regarding the $1,800 per month flat fee, and Ms. Phillips stated her firm would not charge for travel expenses to the monthly Board meetings nor would they charge their usual $100 fee for meetings held after 4:30 p.m., if Ms. Phillips herself attended the meeting. Ms. Phillips noted the flat fee did not include "seasonal" charges during the fourth quarter of the year which would include items such as a review and preparation of the District's annual budget and audit. Ms. Phillips then left the meeting.

Director Koerner noted that a second bookkeeping firm declined to submit a proposal. Director Koerner stated he previously discussed with Mr. Monzingo how the District could continue to retain Montoya & Monzingo, LLP rather than hire a new firm. Mr. Monzingo expressed a willingness to consider this possibility if accommodations could be made so that he did not have to spend so much time travelling to meetings. The Board discussed whether Mr. Monzingo could participate in the meetings remotely and have checks couriered to the meeting. Ms. Albright stated there were restrictions and considerations for consultants to attend meetings remotely, and that she would review the Open Meetings Act to confirm whether and how consultants could participate in meetings remotely. Director Clifford requested follow-up on this topic by the next meeting. Ms. Albright stated she would follow-up with the budget committee as soon as possible. Mr. Monzingo stated that some districts have day meetings, and the Board noted this would interfere with some Directors' work schedules. The Board agreed to table the item until the next meeting. Mr. Monzingo noted he would be out on vacation during the June Board meeting.

Director Golde stated the next item before the Board was to take action regarding a report from the District's Engineer. Mr. Malish presented his report, provided as **Exhibit C** and stated the completed application and site plan for the parking lot had been submitted to Travis County, a copy of which is provided as **Exhibit D**. Director Clifford asked for a timeline on a response from Travis County, to which Mr. Malish stated the review should go fairly quickly and take around six weeks in his estimation. Next, Mr. Malish stated the surplus funds application was ready for submission to TCEQ once the Board approved the resolution authorizing the submission, provided as **Exhibit E**. **Upon motion by Director Koerner, seconded by Director Clifford, and unanimously carried by the Board members present, the Board approved the Resolution Requesting Approval and Authorizing Application to the Texas Commission on Environmental Quality for Use of Surplus Bond Funds.**

Next, Mr. Malish discussed the status of the drainage issues previously discussed and stated Mr. Canady was in the process of putting plans together to address those issues. Director Golde discussed the recent rain event and the area in front of the Arnold residence which almost flooded the residence again. Director Golde emphasized the urgency in addressing this matter and requested Murfee Engineering find a contractor to have the drainage ditch cleaned as soon as

possible due to potential issues with flooding. Ms. Albright recommended the District authorize two directors to work with MEC to provide a proposal not to exceed a certain amount, and that the Board authorize these two Directors to approve the MEC proposal to move forward with the clean out work before the next Board meeting. **Upon motion by Director Koerner, seconded by Director Clifford, and unanimously carried by the Board members present, the Board authorized Murfee Engineering to provide a proposal to clean out the culvert and haul rocks away in an amount not to exceed $5,000, and to move forward on such clean out with the approval of two Board directors.**

Directors Golde and Clifford stated they would review and approve the proposal not to exceed $5,000. Mr. Malish stated he would meet with Director Golde on May 17, 2018 at 9:00 a.m. to discuss the path forward on this drainage issue.

Director Clifford noted the need for trail maintenance due to the recent rain event, to which Director Golde stated he would be placing granite on the affected areas. Next, Mr. Malish stated his office still had not received a response from Dan Ryan to their letter on the rock berm matter.

Mr. Malish requested clarification on what the District needed from his firm in regards to MEC review of the landscaping agreement between the District and the HOA. Director Koerner stated the Board wanted MEC to review the common areas that were being maintained and to note which areas were the District's and which were the HOA's. Director Golde noted the allocation based on the areas set out in the original agreement between the HOA and the District was based on Phases 1 and 2 only; therefore, the amount needed to be revisited. Director Clifford stated the Board needed to know what percentage of the common areas were attributable to facilities that the District owned.

Director Golde provided an update on the surveying of the property line for the game fencing discussed previously and noted the fee would be $1,600, which was not worth the cost in his opinion. He also provided a follow-up on the silted up culverts that were mentioned at the last meeting. Director Golde provided a list of the culverts and photos to Mr. Malish for his review and inclusion in a cost estimate.

The Board next discussed the status of choosing an architect for the storage facility and Ms. Albright directed the Board to email correspondence from Director Sartain which identified the subcommittee's design firm recommendations. Ms. Albright stated the Board had to select an architect based on qualifications and not on pricing. Director Golde requested interviewing one or more of the firms at the next Board meeting. Ms. Albright stated she would email Directors Sartain and Ubertini, copying the District engineers, requesting that the architect firm(s) attend the June Board meeting for interviews/presentations. The Board discussed that the subcommittee should decide who they wanted to invite to the June meeting.

The next item before the Board was to discuss, consider, and take action as necessary concerning property and facilities owned and maintained by and within the District including the Joint Maintenance Agreement (JMA) with the HOA. Ms. Albright presented this item, provided an updated version of the JMA, and noted there were a few non-substantive edits but that the HOA's attorney was reviewing this latest draft. Director Koerner stated he, Director Ubertini, and

Mr. Wiles worked with Ms. Albright and the HOA's attorney on the latest draft and recommended approval of the JMA. **Upon motion by Director Clifford, seconded by Director Koerner, and unanimously carried by the Board members present, the Board approved the JMA with the HOA subject to non-substance edits, as approved by the subcommittee and general counsel.**

The Board discussed the appropriate signatories in light of the recent uncontested election of Directors and the current vacancies in certain officer positions. Ms. Albright stated the signature lines would need to be revised if execution were prior to the election of officers at the next Board meeting. Mr. Wiles asked what the effective date would be for the JMA, to which Ms. Albright stated the date the HOA approved the agreement.

Ms. Albright stated Items. 7.b and 7.c were standing items and that there was no action needed.

Director Clifford presented the next item related to the authorization for painting and other maintenance tasks for the Amenity Center. Director Clifford stated the HOA Board authorized the refurnishing of the Amenity Center, and that Claire Young, a Belvedere resident who was an interior decorator, was consulting on the work without compensation. Ms. Young strongly recommended that the interior of the Amenity Center be repainted as part of this effort. In order to properly sequence this work and have it completed before the 3rd and 4th quarter Social Committee events, Director Clifford stated that a decision needed to be made immediately with regards to the painting. As an aside, Director Clifford noted that the Full Reserve Study as prepared by Reserve Advisors (that was previously shared with the Board), called for partial interior renovation of the Amenity Center (including "application of paint finish to all surfaces") by 2018. Ms. Young had obtained a $3,500 quote for the painting plus $550 to re-finish the front door if done at the same time. Accordingly, Director Clifford requested the Board to authorize the HOA to proceed with the Amenity Center interior painting and door re-finishing for an amount not to exceed $5,000. **After discussion, upon motion by Director Clifford, seconded by Director Koerner, the Board approved and authorized the HOA to proceed with the interior painting of the Amenity Center in the amount not to exceed $5,000.** Director Koerner asked if District would be reimbursing the HOA for these expenditures, to which Director Clifford responded yes.

The next item before the Board was to discuss, consider, and take action on Bond Issue No. 4 regarding recreational facilities, including the required easement for the Amenity Center lot facilities and the Facilities Conveyance Agreement. Ms. Albright presented this item and provided handouts of the draft easement and Facilities Conveyance Agreement, provided as **Exhibit F** and stated the documents were still in final negotiations with the HOA Attorney. Ms. Albright explained the blanket easement for the Amenity Center lot provided legal authority for the District to have the Amenity Center on the lot, which was owned by the HOA. Ms. Albright noted the HOA's attorney expressed concern with the parking lot facilities and whether the two entities might become at odds with each other in the future because the District owned the parking lot facility serving HOA facilities, such as the pool. Ms. Albright explained that she included in the easement a right of access for the HOA to utilize the parking lot facilities that are on the lot. Ms. Albright stated she was waiting on final sign off from the HOA on the Agreement, but recommended the Board's approval subject to non-substantive edits. **After discussion, upon motion by Director Koerner, seconded by Director Clifford, the Board approved the**

easement for the Amenity Center lot facilities subject to final revisions. Ms. Albright recommended the District wait for the HOA to approve the JMA before having the easement put in place.

Ms. Albright noted the Facility Conveyance Agreement was between the District and the developer, but she provided the documents to the HOA's attorney for review in the event the HOA's attorney would like to use it as a template for the remaining facilities that needed to be conveyed to the HOA from the developer. **After discussion, upon motion by Director Clifford, seconded by Director Koerner, the Board approved the Facility Conveyance Agreement subject to non-substantive changes approved by the subcommittee of Directors Golde and Clifford.**

The next item before the Board was to discuss, consider, and take action on Texas Municipal League (TML) insurance coverage for the District facilities. Ms. Albright directed the Board to page three of the proposal provided by TML included as **Exhibit G**. Ms. Albright noted that general liability up to $1 million would cover the trails once conveyed to the District. Director Golde had questions related to the items covered under "boiler and machinery" as it appeared the same items were listed under "property coverage" and questioned whether having the value was significant when item were included in both categories. Ms. Albright stated her office would follow-up with TML to request clarification on the type of coverage for "boiler and machinery" as shown on page five of the proposal, but Ms. Albright recommended approval to ensure insurance was in place. **After discussion, upon motion by Director Koerner, seconded by Director Clifford, the Board authorized approval of the insurance policy with an annual premium not to exceed $1,200.**

There being no further business and upon motion made by Director Koerner, seconded by Director Clifford, and unanimously carried by the Board members present, the meeting adjourned at 7:28 p.m.

PASSED, APPROVED AND ADOPTED THIS 19th day of June, 2018.

Kim Clifford

~~Ron Ubertini~~, Secretary
KIM CLIFFORD

EXHIBIT A

MINUTES OF MEETING
OF
BOARD OF DIRECTORS

THE STATE OF TEXAS	§
	§
COUNTY OF TRAVIS	§
	§
BELVEDERE MUNICIPAL UTILITY DISTRICT	§

A regular meeting of the Board of Directors of Belvedere Municipal Utility District was held on April 17, 2018, in accordance with the duly posted notice of said meeting. The roll was called of the members of the Board of Directors, to-wit:

Peter Golde	President
Donal Sartain	Vice President
Ronald Ubertini	Secretary/Treasurer
Kim Clifford	Assistant Secretary
James Koerner	Assistant Secretary

All members of the Board were present, except for Directors Sartain and Ubertini, thus constituting a quorum of the Board of Directors. All directors present voted on all matters that came before the Board. Also in attendance were Jeff Monzingo with Montoya & Monzingo, LLP; Stefanie Albright and Troupe Brewer, Attorneys, and Lissette Ruiz, Legal Assistant, with Lloyd Gosselink Rochelle and Townsend, P.C.; Bryce Canady with Murfee Engineering Company; Tom Wiles, Charlie Wilson and Lee Blanton were present on behalf of the Belvedere Homeowners Association (HOA).

Director Golde called the meeting to order at 6:00 p.m. and stated the Board would first receive public comment. No public comments were received.

Next, Director Golde stated the Board would discuss, consider, and take action to approve the minutes of the March 20, 2018 regular meeting and March 26, 2018 special meeting provided as **Exhibit A**. **Upon motion by Director Koerner, seconded by Director Clifford, and unanimously carried by the Board members present, the Board approved the March 20, 2018 regular meeting and March 26, 2018 special meeting minutes.**

The next item before the Board was to consider the bookkeeper's report, including, but not limited to, payment of invoices. Mr. Monzingo addressed the Board and reviewed the Bookkeeper's report, provided as **Exhibit B**. He stated there were a few invoices due for payment, including legal, engineering, and bookkeeping services, and the quarterly payment to Texas Disposal Systems. Director Koerner asked a question on the legal invoice regarding payments for time for T. Brewer's attendance at the previous two monthly board meetings. Ms. Albright stated this time should have been "no-charged" and recommended the District hold the bill until the next meeting. Director Clifford recommended paying the invoice and receiving a credit for the charges on the next invoice. The remaining Board members agreed with this approach. Director Golde

requested clarification on the date range provided on the TML invoice and Mr. Monzingo stated he would follow-up with TML.

Director Clifford stated that at the March 26, 2018 Special Board Meeting, the Board decided to establish an operating reserve goal of two times the amount of the District's annual operating budget and asked how the bookkeeping would reflect this reserve amount. Mr. Montoya suggested instead of creating an entirely separate account for the reserve fund, that he simply re-arrange the budget sheet to show a line-item amount indicating this reserve fund as separate and apart from the operating account. Director Golde agreed and recommended a separate line-item to reflect the reserve fund, and Director Clifford requested the next month's statement reflect the separate line item as "operating reserve". **After discussion, upon motion by Director Koerner, seconded by Director Clifford, and unanimously carried by the Board members present, the Board approved the Bookkeeper's report, transfers, and payment of invoices, including the creation of the $480,000 "operating reserve" line item in the budget and account documentation.**

The next item before the Board was to discuss, consider, and take action on Requests for Qualifications for District Bookkeeper. Mr. Montoya indicated he would be reducing the number of his clients and would be focusing on retaining clients that were closer to his home in Round Rock, and thus announced he would be terminating his business relationship with the District at a mutually-agreeable time. Ms. Albright stated that she had spoken with Mr. Monzingo, and they recommended two firms, Municipal Accounts and Consulting and Bott & Douthitt, PLLC. Director Koerner requested the contact information from both firms and advised that the finance subcommittee would contact the firms for proposals.

Item 5 was discussed with Item 3.

Director Golde stated the next item before the Board was to take action regarding a report from the District's Engineer. Mr. Canady stated his office would provide a draft letter of the surplus funds application to TCEQ for the Board's review at the next meeting. Director Clifford asked for any follow-up on the District's ability to reimburse itself from the surplus funds, to which Mr. Canady stated he would request a formal response from TCEQ on that issue. Next, Mr. Canady stated he emailed the contact information for the three previously-identified architectural firms to Directors Ubertini and Sartain. He asked if the members of the HOA subcommittee had been identified. Mr. Tom Wiles introduced Mr. Charlie Wilson and stated he was the only HOA subcommittee member at that time. Mr. Canady suggested the subcommittee members screen the architectural firms and provide a recommendation to the Board. Next, Mr. Canady provided an update on the site plan and stated the survey was complete, but noted there was a conflict with the location of the storage facility. After discussion, the Board recommended the location of the storage facility should be moved northwest to avoid impacting a nearby tree while maintaining the proposed building size. Mr. Canady stated he would update the site plan and send to the subcommittee for review.

Mr. Canady provided an update on the drainage issues and noted four sites that required repairs. Mr. Canady provided an estimate, provided as **Exhibit C**, for his office to prepare and design four plan sheets for soliciting contractors to make repairs to these drainage system concerns,

noting that Lot 89 was the most urgent due to damage caused from the last storm. Director Clifford also noted several culverts that were partially filled that needed to be cleaned out, and Director Golde stated he would identify and prepare a list of the culverts and requested that Mr. Canady add this scope of work to the proposal to the contractors. Director Golde noted a culvert at Flagler and Lynchburg with big rocks along the north side of the trail that partially blocked the outlet of the culvert and that there was an eroded area outside of the rocks. Director Golde requested Mr. Canady review the area and noted that it could be another area to possibly include in the scope of work for the proposal. **After discussion, upon motion by Director Koerner, seconded by Director Clifford, and unanimously carried by the Board members present, the Board authorized Murfee Engineering to formalize a proposal not to exceed $7,000, as provided in Exhibit C, and authorized Murfee Engineering to move forward as directed.** Mr. Canady noted the approved amount did not include any work related to the culverts or other work identified by Director Golde. Director Clifford stated the proposal could be amended at the next meeting to include additional areas discussed at this meeting once Mr. Canady had an opportunity to prepare a cost estimate therefor.

Mr. Canady stated he had not received a response from Dan Ryan to the letter regarding the continued existence of rock berms and the District's prior payment for removal of the berms. Mr. Canady also noted he had reviewed culverts at two homes under construction: 14 Lakewood Ridge Cove and 17613 Flagler, and both sites appeared to meet the District's requirements for culvert sizing.

Director Clifford had a follow-up question from the March 26, 2018 Special Board Meeting regarding the budget for landscaping and asked if there were any concerns regarding the situation where the HOA would pay for landscaping-installed as part of a District project for which the District would have the on-going maintenance obligation. Director Koerner stated there would be no expenditures this fiscal year on funding for landscaping so this issue did not need to be addressed at this time. Ms. Albright expressed no legal concern with the HOA placing landscaping on any property even if the District ultimately agreed to be responsible for maintaining such landscaping.

A discussion ensued regarding the current language in the draft Joint Maintenance Agreement (JMA) and an attempt was made to clarify which entity owned and had responsibility for maintenance of the various facilities and property. Director Koerner stated this subject of landscape cost sharing needed to be evaluated and the Board did not know at this time how much landscaping would cost at that point. He reminded the Board that Murfee Engineering's assistance was needed to calculate the split between the District's and the HOA's areas of responsibility for landscaping, but at this point there were no definitive answers in the new JMA on that topic.

Next, Director Golde provided an update on the previous impervious cover and the new parking lot paving discussions. Director Golde stated, based on his discussion with Wayne Rochelle and Kim Bigley, it was unclear what the impervious coverage percentage was for the neighborhood, and the only way to determine this percentage was to conduct an audit of the property. Director Golde stated he was not interested in this exercise, and recommended the District go forward with installing pervious pavement and pervious asphalt, which would not impact the District's compliance with the impervious cover requirements. Director Koerner asked

if that changed Mr. Canady's cost estimate, and Mr. Canady stated he would have to run some numbers and follow up. Director Golde stated that he believed the estimate provided was for pervious. Mr. Canady stated an easy thing to do was to tell Travis County that the development was below the platted requirement for the Amenity Center lot which was a 15% per lot basis. If the District can meet 15% impervious cover that for the Amenity Center parking lot then the District can move forward with the site plan. Mr. Canady stated that his office was breaking down the impervious cover for the Amenity Center this week, and if it fell below 15%, they could go to the County and report it was below the 15% per lot and move forward.

Mr. Canady provided a follow-up on Lot 51 regarding installation of the game fence. Director Golde stated that Ms. Bigley was gathering quotes for the fence installation across the drainage easement, but that due to the amount of vegetation it would be difficult to put the fence on the Belvedere side of the rock wall that was in existence. He also stated that it was unclear where the rock wall was located as compared to the property line. Director Golde stated that since the surveyor was in the District to survey for the Amenity Center lot improvements, Mr. Canady should ask the surveyor to locate the property line in relation to the rock wall. Mr. Canady stated he would contact the surveyor in this regard.

Director Golde stated the next item before the Board was to discuss, consider, and take action on Bond Issue No. 4 regarding recreational facilities, including: (a) easement for Amenity Center lot facilities; (b) Belvedere Trail System; and (c) Facilities Conveyance Agreement. Ms. Albright stated Items 7 and 8 were standing items until the JMA was complete, at which point the conveyance could be completed and a blanket easement executed between the HOA and the District. Director Clifford asked if this would be done by May, to which Ms. Albright stated, once the JMA was approved, the other documents would be easy to do. Director Koerner noted he had very minor adjustments to the current draft of the JMA and only had one follow-up question for Ms. Albright related to insurance coverage. Director Clifford stated she had also provided comments to Ms. Albright and that the main additions that she had proposed were to cause there to be a comprehensive maintenance agreement, which made it clear what was owned by the District and what was owned by the HOA and which entity was responsible for undertaking the maintenance thereof. Mr. Blanton addressed the Board and stated the HOA Board had not seen the draft JMA, to which Ms. Albright stated the draft had been provided to the HOA's attorney for review and that the District was awaiting her final comments so that the JMA could be added to the May agenda.

Next, Director Golde followed up on a discussion from the Special Board Meeting and the six-month deadline to commit to using bond proceeds designated for trails, but stated this would be discussed at the May meeting in more detail.

Item 9 was a standing item and was not discussed.

There being no further business and upon motion made by Director Clifford, seconded by Director Koerner, and unanimously carried by the Board members present, the meeting adjourned at 7:58 p.m.

PASSED, APPROVED AND ADOPTED THIS ____ day of May 2018.

_____
Ronald Ubertini, Secretary

EXHIBIT B

BELVEDERE MUD
SCHEDULE OF CASH ACTIVITY
GENERAL FUND
MEETING DATE: MAY 15, 2018

CASH BALANCE AS OF 4/30/18				**$ 19,689.52**
Revenue:				
Deposit Date	Description		Amount	
05/15/18	Transfer from Money Market		$ 10,000.00	
				$ 10,000.00
	Cash Balance Before Expenditures			$ 29,689.52
Expenditures:				
Check Number	Description		Amount	
1031	Montoya & Monzingo LLP	Accounting Fees	$ 1,200.00	
1032	Murfee Engineering Company	Engineering Fees	$ 1,519.68	
1033	Murfee Engineering Company	Engineering Fees	$ 1,283.75	
1034	Murfee Engineering Company	Engineering -Amenity	$ 9,792.50	
1035	Murfee Engineering Company	Surplus Funds	$ 2,482.50	
1036	TCEQ	Filing Fees	$ 100.00	
1037	Lloyd Gosselink	Attorney Fees	$ 2,540.80	
Transfer	Belvedere - Debt Service	Property Taxes	$ 6,543.08	
	Total Expenditures			$ 25,462.31
ENDING CASH BALANCE - CHECKING OPERATING AS OF MAY 15, 2018				**$ 4,227.21**
CASH BALANCE - MONEY MARKET OPERATING				**$ 721,142.35**
Transfer	Transfer to Checking		$ (10,000.00)	
	Total Deposit			$ (10,000.00)
ENDING CASH BALANCE - MONEY MARKET OPERATING				**$ 711,142.35**
TOTAL CASH BALANCE OPERATING				**$ 715,369.56**
CASH BALANCE - CAPITAL PROJECTS				**$ 1,114,373.97**
TOTAL CASH BALANCE - CAPITAL PROJECTS				**$ 1,114,373.97**
CASH BALANCE - DEBT SERVICE FUND				**$ 662,266.54**
Deposits				
	Property Taxes		$ 6,543.08	
	Total Deposits:			$ 6,543.08
ENDING CASH BALANCE - DEBT SERVICE FUND				**$ 668,809.62**

Belvedere Municipal Utility District
Statement of Revenues and Expenditures Budget vs. Actual
For the Year to Date Ended May 15, 2018
Unaudited

	Year to Date Actual	Year to Date Budget	Year to Date Variance Favorable (Unfavorable)	2018 Annual Budget	2018 Annual Variance Favorable (Unfavorable)
Revenues					
Maintenance Taxes	$ 332,534	217,770	$ 114,764	$ 326,655	$ 5,879
Bond Proceeds	61,000	-	-	-	-
Interest Income	1,379	333	1,046	500	879
Total Revenues	394,913	218,103	115,810	327,155	6,758
Expenditures					
Solid Waste Disposal	29,543	28,500	(1,043)	38,000	8,457
Legal Fees	43,158	36,667	(6,491)	55,000	11,842
Audit Fees	7,500	8,500	1,000	8,500	1,000
Accounting Fees	9,600	9,600	-	14,400	4,800
Engineering Fees	15,565	12,000	(3,565)	18,000	2,435
Engineering Design	13,968	10,000	(3,968)	15,000	1,032
Landscaping	25,069	25,069	-	25,069	-
Amenity Center Operations & Maintenance	-	15,667	15,667	23,500	23,500
Maintenance	-	23,333	23,333	35,000	35,000
Insurance	1,683	1,333	(350)	2,000	317
Tax Appraisal and Collection Fees	2,093	2,667	574	4,000	1,907
Bank Charges	5	133	128	200	195
Other Fees	-	67	67	100	100
Newspaper notices	-	1,333	1,333	2,000	2,000
Total Expenditures	148,184	174,869	26,685	240,769	92,585
Projected Excess Revenue Over Expenditures	$ 246,729	$ 28,796	$ 217,933	$ 86,386	$ 160,343

Solid Waste Disposal year to date budget reflects 9 months because 9 month of payments have been made.
Audit Fees and Landscaping year to date budget reflects the full yearly amount for each because they are totally billed for the year.

Belvedere Municipal Utility District

Investments as of March 31, 2018

Fund	Financial Institution	Investment	Account Number	Book Value Ending 2/28/18	Market Value Ending 2/28/18	Book Value Ending 3/31/18	Market Value Ending 3/31/18	Yield	Income for Month	Purchase Date	Purchase Price	Maturity date
Operating	ABC Bank	Money Market Deposit Account	4135091	$ 625,295.12	$ 625,295.12	$ 770,665.66	$ 770,665.66	0.63%	$ 370.54	N/A	N/A	N/A
Operating	ABC Bank	Public Funds Checking	4124251	$ 238,371.81	$ 238,371.81	$ 11,491.43	$ 11,491.43	N/A		N/A	N/A	N/A
Debt Service	ABC Bank	Money Market Deposit Account	4124278	$ 614,496.71	$ 614,496.71	$ 661,281.28	$ 661,281.28	0.62%	$ 341.11	N/A	N/A	N/A
Capital Projects	ABC Bank	Money Market Deposit Account	4124286	$ 1,124,851.67	$ 1,124,851.67	$ 1,113,445.08	$ 1,113,445.08	0.93%	$ 905.96	N/A	N/A	N/A

Total investment return for the quarter ending March 31, 2018 was $2,159.26 and is in line with budgetary expectations.

There are no changes to market, economic, and investment conditions that would require any changes to investment strategy.

This report is submitted in accordance with the Public Funds Investment Act and the District's investment policy.

Jeff Monzingo, CPA

District Investment Officer

Belvedere Municipal Utility District
Balance Sheet
As of May 15, 2018

	May 15, 18	
ASSETS		
Current Assets		
Checking/Savings		
CASH		
Money Market - ABC Bank	711,142.35	
Checking Account - ABC Bank	4,227.21	
Total CASH		715,369.56
Total Checking/Savings		715,369.56
Accounts Receivable		
Taxes Receivable		6,041.22
Total Accounts Receivable		6,041.22
Other Current Assets		
Due From Capital Projects		5,205.00
Prepaid Insurance		716.38
Total Other Current Assets		5,921.38
Total Current Assets		727,332.16
TOTAL ASSETS		**727,332.16**
LIABILITIES & EQUITY		
Liabilities		
Current Liabilities		
Other Current Liabilities		
Deferred Revenue		6,041.22
Total Other Current Liabilities		6,041.22
Total Current Liabilities		6,041.22
Total Liabilities		6,041.22
Equity		
Unassigned		474,561.35
Net Income		246,729.59
Total Equity		721,290.94
TOTAL LIABILITIES & EQUITY		**727,332.16**

Belvedere Municipal Utility District
Profit & Loss
October 1, 2017 through May 15, 2018

		Oct 1, '17 - May 15, 18
Ordinary Income/Expense		
Income		
Interest Income		1,379.51
Income		
Property Taxes	332,533.62	
Total Income		332,533.62
Total Income		333,913.13
Expense		
Audit Fees		7,500.00
Bank Service Charges		5.00
Bookkeeping Fees		9,600.00
Engineering		
Engineering Design - Amenity	13,967.63	
District Engineering	15,565.61	
Total Engineering		29,533.24
Insurance		
Liability Insurance	1,682.84	
Total Insurance		1,682.84
Legal Fees		
Legal Fees	43,157.79	
Total Legal Fees		43,157.79
Maintenance of MUD Facilities		25,068.54
Collection and Appraisal Fees		2,092.78
Waste Disposal		29,543.35
Total Expense		148,183.54
Net Ordinary Income		185,729.59
Other Income/Expense		
Other Income		
Bond Proceeds		61,000.00
Total Other Income		61,000.00
Net Other Income		61,000.00
Net Income		**246,729.59**

Belvedere MUD - Capital Projects Fund
Balance Sheet
As of May 15, 2018

	May 15, 18
ASSETS	
Current Assets	
Checking/Savings	
Cash	1,114,373.97
Total Checking/Savings	1,114,373.97
Other Current Assets	
Prepaid Bond Expenses	5,205.00
Total Other Current Assets	5,205.00
Total Current Assets	1,119,578.97
TOTAL ASSETS	**1,119,578.97**
LIABILITIES & EQUITY	
Liabilities	
Current Liabilities	
Other Current Liabilities	
Due to Operating	5,205.00
Total Other Current Liabilities	5,205.00
Total Current Liabilities	5,205.00
Total Liabilities	5,205.00
Equity	
Restricted	92,182.54
Net Income	1,022,191.43
Total Equity	1,114,373.97
TOTAL LIABILITIES & EQUITY	**1,119,578.97**

Belvedere MUD - Capital Projects Fund
Profit & Loss
October 1, 2017 through May 15, 2018

	Oct 1, '17 - May 15, 18
Ordinary Income/Expense	
Income	
Bond Proceeds	1,136,656.10
Total Income	1,136,656.10
Gross Profit	1,136,656.10
Expense	
Bond Expenses	116,354.30
Bank Service Charges	77.00
Total Expense	116,431.30
Net Ordinary Income	1,020,224.80
Other Income/Expense	
Other Income	
Interest Income	1,966.63
Total Other Income	1,966.63
Net Other Income	1,966.63
Net Income	**1,022,191.43**

Belvedere MUD-Debt Service Fund
Balance Sheet
As of May 15, 2018

		May 15, 18
ASSETS		
Current Assets		
Checking/Savings		
Cash		
MUD Debt Service Fund	668,809.62	
Total Cash		668,809.62
Total Checking/Savings		668,809.62
Accounts Receivable		
Taxes Receivable		7,601.11
Total Accounts Receivable		7,601.11
Total Current Assets		676,410.73
TOTAL ASSETS		**676,410.73**
LIABILITIES & EQUITY		
Liabilities		
Current Liabilities		
Other Current Liabilities		
Deferred Revenue		7,601.11
Total Other Current Liabilities		7,601.11
Total Current Liabilities		7,601.11
Total Liabilities		7,601.11
Equity		
Restricted		359,111.02
Net Income		309,698.60
Total Equity		668,809.62
TOTAL LIABILITIES & EQUITY		**676,410.73**

Belvedere MUD-Debt Service Fund
Profit & Loss
October 1, 2017 through May 15, 2018

	Oct 1, '17 - May 15, 18
Ordinary Income/Expense	
Income	
Tax Revenue	390,375.16
Total Income	390,375.16
Expense	
Bank Service Charges	72.00
Interest Expense	81,193.75
Paying Agent Fee	600.00
Total Expense	81,865.75
Net Ordinary Income	308,509.41
Other Income/Expense	
Other Income	
Interest Income	1,189.19
Total Other Income	1,189.19
Net Other Income	1,189.19
Net Income	**309,698.60**

TRAVIS COUNTY TAX OFFICE

TXDIST1A — OVERALL COLL/DIST REPORT — DATE 05/01/2018 — PAGE 83

RECEIVABLE BALANCE 'R' REPORT — FROM 10/01/2017 TO 04/30/2018 — YEAR FROM 0000 TO 2017

ALL OTHERS

U1K -- BELVEDERE MUD

YEAR	BEGINNING TAX BALANCE	TAX ADJ	BASE TAX COLLECTED	REVERSALS	NET BASE TAX COLLECTED	PERCENT COLLECTED	ENDING TAX BALANCE	P & I COLLECTED	P & I REVERSALS	LRP COLLECTED	OTHER PENALTY COLLECTED	TOTAL DISTRIBUTED
2006	.00	.00	.00	.00	.00	.00 %	.00	.00	.00	.00	.00	.00
2007	.00	.00	.00	.00	.00	.00 %	.00	.00	.00	.00	.00	.00
2008	.00	.00	.00	.00	.00	.00 %	.00	.00	.00	.00	.00	.00
2009	.00	.00	.00	.00	.00	.00 %	.00	.00	.00	.00	.00	.00
2010	.00	.00	.00	.00	.00	.00 %	.00	.00	.00	.00	.00	.00
2011	.00	.00	.00	.00	.00	.00 %	.00	.00	.00	.00	.00	.00
2012	.00	.00	.00	.00	.00	.00 %	.00	.00	.00	.00	.00	.00
2013	.00	.00	.00	.00	.00	.00 %	.00	.00	.00	.00	.00	.00
2014	2371.31	.00	.00	.00	.00	.00 %	2371.31	.00	.00	.00	.00	.00
2015	3336.25	.00	.00	.00	.00	.00 %	3336.25	.00	.00	.00	.00	.00
2016	7741.28	.00	4377.35	.00	4377.35	56.55 %	3363.93	1042.02	.00	.00	.00	5419.37
TOTL	13448.84	.00	4377.35	.00	4377.35	32.55 %	9071.49	1042.02	.00	.00	.00	5419.37
2017	725464.67	50.97-	720893.83	50.97	720842.86	99.37 %	4570.84	2379.70	.00	.00	.00	723222.56
ENTITY TOTL	738913.51	50.97-	725271.18	50.97	725220.21	98.15 %	13642.33	3421.72	.00	.00	.00	728641.93

Outstanding property tax receivable

Debt service: 2014 = 1440.81
2015 = 1962.38
2016 = 1727.38
2017 = 2470.54
} 7601.11

Operating: 2014 = 930.50
2015 = 1373.87
2016 = 1636.55
2017 = 2100.30
} 6041.22

current tax rate

operating: .17
Debt service: .20
total: .37

EXHIBIT C

MURFEE ENGINEERING COMPANY, INC.
Texas Registered Firm No. F-353
1101 Capital of Texas Hwy., South, Bldg, D
Austin, Texas 78746
(512) 327-9204

M E M O R A N D U M

DATE: May 15th, 2018

TO: **BOARD OF DIRECTORS – BELVEDERE MUD**

FROM: Bryce Canady, P.E.

RE: Engineer's Report – May 2018

CC: Stefanie Albright – Lloyd Gosselink
David Malish, P.E. - MEC

MEC File No.: 17031.10

Amenity Center Improvements

MEC generated a short list of Architects and their company resumes for the Amenity Center Improvements Project Subcommittee to review. The next step is for the subcommittee to select which Architects to interview. MEC will request proposals from the Architects the subcommittee selects to move forward with from the outcome of the resume review/interview process and will present to the Board for review and possible selection at the following Board meeting.

The site permit has been completed and submitted to Travis County for review and approval. A copy of the site plan and application letter are attached.

Surplus Funds Application

MEC has completed the draft letter to the TCEQ for the approval of $92,247 of surplus funds to be used on future drainage improvements throughout the District. MEC has requested that the resolution and check for the application fee ($100) be generated to be submitted with the application.

Drainage Issues

MEC has completed a preliminary review of the four sites and has started generating plan sheets to be used for repairs. A fifth site at the double culvert on N. side of trail approximately 500' from the intersection of Lynchburg & Flagler was added at the last meeting and will be included in the repair scope.

Additional Requests

- Letter sent to Dan Ryan regarding existence of rock berms was sent on 3.15.18. Still awaiting response.
- Joint maintenance agreement – MEC was asked to discuss the true support the MUD should provide to the HOA
- Lot 51 – Survey quote was sent to Peter Golde on 4/20/18 and is attached for review and approval
- MEC is generating a scope and pricing for engineering & design of future additions to the trail system

EXHIBIT D

Murfee Engineering Company

May 4, 2018

Steve Manilla, P.E., County Executive
Travis County TNR
P.O. Box 1748
700 Lavaca, 5th. Floor
Austin, Texas 78767

Re: Belvedere Amenity Center, Lot 1, 2.78 acres of Blk. D, Belvedere Phase 1
17400 Flagler Dr., Austin Texas 78738

Dear Mr. Manilla:

Attached please find the completed application and the site plan for expansion of the Belvedere Amenity Center. The original Class 'A' Basic Development Permit (No. 05-3688), with plans prepared by LJA Engineering, Inc., was approved by Travis County on November 10, 2005. The approved site plan consisted of two phases. A copy of the approved site plan is included in this submittal. The first phase was constructed with a reduced scope and layout of the approved plan.

With the new site plan submittal, the actual Phase 1 improvements are shown with the existing impervious cover. The calculated existing impervious cover is 14,622 square feet, or 12.1 percent. The proposed improvements consist of additional parking, an 800 square foot storage building, and minor concrete riprap adjacent to the building. As with the existing parking, all parking and drive areas will consist of pervious pavement. With the proposed improvements, an additional 969 square feet, representing 12.9 percent of impervious cover is proposed.

Per the attached Sheet 9 of the LJA Amenity Site Permit plans, impervious cover calculations are provided for the entire Belvedere development. Under the "Other Imperv" column, 0.5 acres is allotted for the amenity site. The Site Plan sheet for the proposed amenity improvements shows the existing plus proposed impervious at 15,591 sq.ft., or 0.36 acres. Regional detention for the amenity site and residential development in the Rocky Creek watershed was constructed with the LJA Belvedere Phase VII-B plans approved by the County on February 6, 2014 under permit no. 13-2292. Sheet 9 of the VII-B plans provides a summary of the detention analysis indicating no increase in flow for the two through 100-year events at the exit from the Belvedere development.

To the best of my knowledge, the submitted plans are complete, correct, and in compliance with the applicable sections of the County Development Code.

1101 Capital of Texas Highway South • Building D, Suite 110 • Austin, Texas 78746 • 512/327-9204 • TBPE F353

Sincerely,

Bryce Canady

Bryce Canady, P.E.

cc: Stefanie Albright, Lloyd Gosselink
Peter Golde, Belvedere MUD Board President
MEC Project No.: 17031-20

Attachments: Application and Site Plan for Belvedere MUD Amenity Center Expansion
Previously Approved Class A Basic Development Permit No. 05-3688

BELVEDERE M.U.D.

AMENITY CENTER IMPROVEMENTS

17400 FLAGLER DR., AUSTIN. TX 78738

BELVEDERE M.U.D.
AMENITY CENTER IMPROVEMENTS
17400 FLAGLER DR., AUSTIN, TX 78738

NOTES:

1. RELEASE OF THIS APPLICATION DOES NOT CONSTITUTE A VERIFICATION OF ALL DATA, INFORMATION, AND CALCULATIONS SUPPLIED BY THE APPLICANT. THE ENGINEER OF RECORD IS SOLELY RESPONSIBLE FOR THE COMPLETENESS, ACCURACY, AND ADEQUACY OF HIS/HER SUBMITTAL, WHETHER OR NOT THE APPLICATION IS REVIEWED FOR CODE COMPLIANCE BY CITY ENGINEERS. THE ENGINEER WHO PREPARED THESE PLANS IS RESPONSIBLE FOR THEIR ADEQUACY. IN APPROVING THESE PLANS, TRAVIS COUNTY MUST RELY UPON THE ADEQUACY OF THE WORK OF THE DESIGN ENGINEER.
2. THIS PROJECT IS LOCATED IN TRAVIS COUNTY
3. THIS PROJECT IS LOCATED IN THE BARTON CREEK WATERSHED.
4. THIS PROJECT LIES WITHIN THE EDWARDS AQUIFER CONTRIBUTING ZONE.
5. NO PORTION OF THIS SITE LIES WITHIN A DESIGNATED FLOOD HAZARD ZONE BASED ON FLOOD INSURANCE RATE MAP, PANEL #48453C0395H TRAVIS COUNTY, TEXAS AND INCORPORATED AREAS, EFFECTIVE DATE SEPTEMBER 28, 2008
6. CONTRACTOR SHALL FIELD VERIFY ALL EXISTING UTILITIES VERTICALLY AND HORIZONTALLY PRIOR TO CONSTRUCTION. CONTRACTOR SHALL CONTACT THE CITY OF AUSTIN 811 ONE-CALL FOR UTILITY LOCATIONS, WATER AND TELECOMMUNICATIONS ARE EXPECTED TO BE LOCATED WITHIN THE PROPOSED TRENCHING AREAS.

SUBMITTED FOR APPROVAL BY:
MURFEE ENGINEERING COMPANY, INC.

STATE OF TEXAS
BRYCE D. CANADY
123424
LICENSED
PROFESSIONAL ENGINEER

Bryce Canady — 5/10/18
REGISTERED PROFESSIONAL ENGINEER — DATE

REVIEWED BY:

TRAVIS COUNTY TRANSPORTATION AND NATURAL RESOURCES — DATE

TNR DEVELOPMENT PERMIT NUMBER — DATE

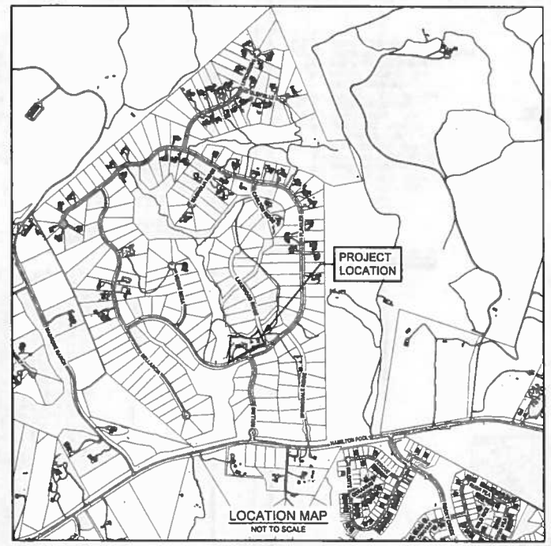

LOCATION MAP
NOT TO SCALE

SHEET NO.	SHEET TITLE
01	COVER SHEET
02	FINAL PLAT
03	FINAL PLAT
04	FINAL PLAT
05	FINAL PLAT
06	GENERAL NOTES
07	SITE PLAN
08	EROSION SEDIMENTATION CONTROL PLAN & TREE PROTECTION
09	DETAIL SHEET

APPLICANT/OWNER:
BELVEDERE M U D.
C/O LLOY & GOSSELINK ROCHELLE & TOWNSEND PC
816 CONGRESS AVE, SUITE 1900
AUSTIN, TEXAS 78701-2478
PH: (512) 322-5847

ENGINEER:
MURFEE ENGINEERING COMPANY, INC.
1101 CAPITAL OF TEXAS HIGHWAY SOUTH
BUILDING D, SUITE 110
AUSTIN, TEXAS 78746
PH: (512) 327-9204
FAX: (512) 327-2947

LEGAL DESCRIPTIONS:
BELVEDERE PHASE I, BLOCK D, LOT 1 BEING A 2.771 ACRE TRACT OF LAND SITUATED IN THE SAM WILDY SURVEY NO. 528, ABSTRACT 1, BEING A PORTION OF THAT CERTAIN 443.695 ACRES OF LAND CONVEYED TO US BY DEED RECORDED IN DOCUMENT NO. 2005055954 OF THE OFFICIAL PUBLIC RECORDS OF TRAVIS COUNTY.

NO	REVISION DESCRIPTION	REVIEWED BY	DATE

D:\17031\20\TITLE-NOTES-DETAILS.dwg

MEC
MURFEE ENGINEERING COMPANY
1101 CAPITAL OF TEXAS HIGHWAY SOUTH
BUILDING D, SUITE 110
AUSTIN, TEXAS 78746
(512) 327-9204
Texas Registered Engineering Firm F-353

200600055

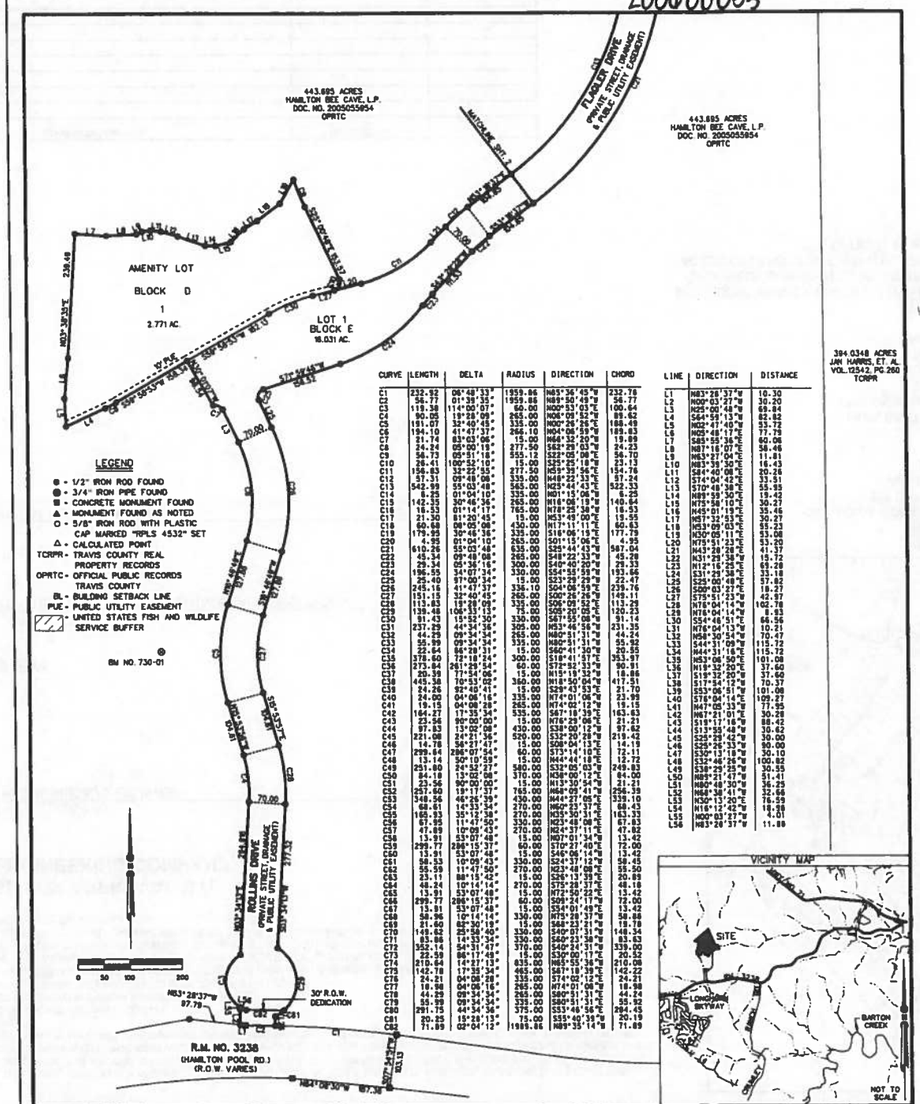

CURVE	LENGTH	DELTA	RADIUS	DIRECTION	CHORD
C1	232.92	06°48'33"	1959.86	N85°36'45"W	232.78
C2	56.77	01°39'33"	1959.86	N89°56'49"W	56.77
C3	119.38	114°00'07"	60.00	N00°53'03"E	100.64
C4	90.05	19°28'09"	265.00	N09°09'52"W	89.62
C5	191.07	32°40'45"	335.00	N06°26'26"E	188.49
C6	194.10	41°47'37"	266.10	N04°08'19"W	189.83
C7	21.74	83°03'06"	15.00	N64°32'20"W	19.89
C8	24.24	05°00'11"	277.50	S22°03'53"W	24.23
C9	56.73	09°51'18"	355.12	S22°05'08"E	56.70
C10	26.41	100°52'10"	15.00	S25°35'18"W	23.12
C11	156.83	33°22'53"	277.50	N09°09'56"E	154.76
C12	57.31	09°48'08"	335.00	N46°22'33"E	57.24
C13	542.99	93°03'48"	365.00	N25°44'43"E	522.33
C14	6.25	01°04'10"	335.00	N01°15'08"W	6.25
C15	142.33	30°46'56"	265.00	N16°08'19"W	140.64
C16	16.53	01°14'17"	765.00	N78°25'38"W	16.53
C17	21.30	81°20'48"	15.00	N19°15'00"E	19.55
C18	60.69	08°05'08"	430.00	N17°11'13"E	60.63
C19	179.95	30°46'36"	335.00	S16°06'15"E	177.79
C20	4.95	01°04'10"	265.00	S01°15'08"E	4.95
C21	610.26	55°03'48"	635.00	S25°44'43"W	587.04
C22	45.34	09°49'08"	265.00	S48°22'33"W	45.28
C23	29.34	05°36'15"	300.00	S40°40'20"W	29.33
C24	196.55	41°07'14"	330.00	S44°15'57"W	193.46
C25	25.40	97°00'34"	15.00	S33°29'29"W	22.47
C26	245.16	41°47'37"	336.10	S04°06'39"W	239.76
C27	151.15	32°40'45"	265.00	S06°26'26"E	149.11
C28	113.83	19°28'09"	335.00	S09°09'52"E	113.25
C29	139.48	106°53'12"	75.00	S00°39'25"E	120.23
C30	91.43	15°52'30"	330.00	S67°55'08"W	91.14
C31	237.29	44°34'16"	305.00	N63°46'54"W	231.35
C32	44.29	09°34'34"	265.00	N80°51'11"W	44.24
C33	59.99	09°34'34"	335.00	N80°51'11"W	59.92
C34	22.64	96°28'31"	15.00	S60°41'30"W	20.05
C35	378.60	72°18'31"	300.00	S18°41'57"E	353.97
C36	273.84	261°29'54"	60.00	S72°52'33"W	90.91
C37	20.38	77°54'06"	15.00	N15°19'32"W	18.86
C38	445.38	70°52'27"	360.00	N19°50'26"E	417.51
C39	24.26	92°40'41"	15.00	S29°43'53"E	21.70
C40	24.00	64°06'16"	335.00	N74°01'06"W	23.99
C41	19.15	04°08'28"	265.00	N74°02'12"W	19.15
C42	164.27	17°53'34"	535.00	S47°18'39"E	163.63
C43	23.56	90°00'00"	15.00	N76°25'06"E	21.21
C44	97.53	93°03'48"	450.00	S38°02'12"E	97.42
C45	221.08	24°21'36"	520.00	S32°20'28"W	219.42
C46	14.78	56°27'47"	15.00	S08°04'13"E	14.19
C47	299.64	286°15'34"	60.00	S13°14'10"E	72.11
C48	13.14	50°10'39"	15.00	N44°44'18"E	12.72
C49	251.80	43°52'37"	580.00	S32°05'03"W	245.83
C50	84.18	13°02'08"	370.00	N38°00'12"E	84.00
C51	23.56	90°00'00"	15.00	N13°30'54"W	21.21
C52	257.60	19°17'37"	765.00	N68°09'41"W	256.39
C53	348.56	46°35'34"	430.00	N44°27'53"E	339.10
C54	68.61	14°33'34"	270.00	N60°51'11"W	68.43
C55	169.93	35°13'38"	270.00	N35°50'31"E	167.33
C56	67.95	11°47'50"	330.00	N23°48'08"E	67.83
C57	47.89	10°09'43"	270.00	N24°37'11"E	47.82
C58	13.91	53°07'48"	15.00	N07°01'34"W	13.42
C59	299.77	286°15'37"	60.00	S70°27'40"E	72.00
C60	13.91	53°07'48"	15.00	S46°06'14"W	13.42
C61	58.53	10°09'43"	330.00	S24°37'12"W	58.45
C62	56.59	11°47'50"	270.00	S23°48'08"W	56.50
C63	23.11	88°13'42"	15.00	S26°13'28"E	20.89
C64	48.24	10°14'14"	270.00	S75°28'37"E	48.18
C65	13.91	53°07'48"	15.00	N72°50'22"E	13.42
C66	299.77	286°15'37"	60.00	S09°24'17"W	72.00
C67	13.91	53°07'48"	15.00	S54°01'49"E	13.42
C68	58.96	10°14'14"	330.00	N75°28'37"W	58.88
C69	21.60	82°30'14"	15.00	S68°23'21"W	19.78
C70	149.62	25°58'46"	330.00	S40°07'31"W	148.34
C71	83.86	14°33'34"	330.00	S60°51'38"W	83.63
C72	352.14	54°41'47"	370.00	S49°24'31"W	339.00
C73	22.59	86°17'48"	15.00	S30°00'17"E	20.52
C74	210.64	14°27'13"	835.00	N65°55'36"E	210.08
C75	142.78	17°35'34"	465.00	S67°18'39"E	142.22
C76	24.21	04°08'28"	335.00	N74°02'12"W	24.21
C77	18.98	04°08'16"	265.00	N74°01'06"W	18.98
C78	44.29	09°34'34"	265.00	S80°51'11"E	44.24
C79	59.99	09°34'34"	335.00	S80°51'11"E	59.92
C80	291.75	44°34'36"	375.00	S53°46'56"E	284.45
C81	20.25	15°28'13"	75.00	S55°40'59"W	20.19
C82	71.89	02°04'12"	1985.86	N89°35'14"W	71.89

LINE	DIRECTION	DISTANCE
L1	N83°28'37"W	10.30
L2	N00°03'27"W	30.20
L3	N25°00'48"W	69.84
L4	S64°59'13"W	62.82
L5	N02°47'40"W	53.72
L6	N02°47'17"W	77.78
L7	N45°55'36"E	60.08
L8	N87°16'07"E	58.46
L9	N63°27'04"E	11.81
L10	N83°38'30"E	16.43
L11	S84°40'08"E	20.26
L12	S74°04'42"E	33.51
L13	S70°49'38"E	55.59
L14	N89°59'30"E	19.42
L15	N75°58'10"E	30.27
L16	N45°01'19"E	35.46
L17	N57°32'53"E	30.27
L18	N53°09'03"E	51.23
L19	N30°05'11"E	53.08
L20	N75°51'23"E	53.20
L21	N43°28'26"E	41.37
L22	N41°29'58"W	15.72
L23	N12°16'25"E	65.28
L24	S31°29'58"E	33.18
L25	S25°00'48"E	37.82
L26	S00°03'27"E	18.27
L27	S75°51'23"W	42.87
L28	N76°04'14"W	102.78
L29	N76°04'14"W	8.83
L30	S54°46'51"E	68.56
L31	N76°04'13"W	10.21
L32	N58°30'54"W	70.47
L33	S44°31'08"E	115.72
L34	N44°31'16"E	115.72
L35	N53°06'50"E	101.08
L36	N19°32'20"E	37.60
L37	S19°32'20"W	37.60
L38	S17°54'12"W	70.37
L39	S53°06'51"W	101.08
L40	S76°04'14"E	109.27
L41	N47°05'33"W	77.95
L42	N47°21'01"E	30.28
L43	S19°17'16"W	88.42
L44	S13°39'48"W	30.62
L45	S25°29'42"W	30.00
L46	S25°26'33"W	90.00
L47	S30°13'18"W	30.10
L48	S32°46'26"W	100.82
L49	S38°29'25"W	30.55
L50	N89°21'47"W	51.41
L51	N89°48'30"W	21.25
L52	N68°38'41"W	32.68
L53	N50°13'20"E	76.59
L54	N16°12'42"W	16.88
L55	N00°03'27"W	4.01
L56	N83°28'37"W	11.89

VICINITY MAP

BELVEDERE
PHASE 1

RAMSEY LAND SURVEYING, L.L.C.
8718 SOUTHWEST PARKWAY
P.O. BOX 92768
AUSTIN, TEXAS 78709-2768
PHONE (512) 301-9398
FAX (512) 301-9395
rlsurvey@flash.net

NO	REVISIONS	DRN	CHK	DATE

200600055

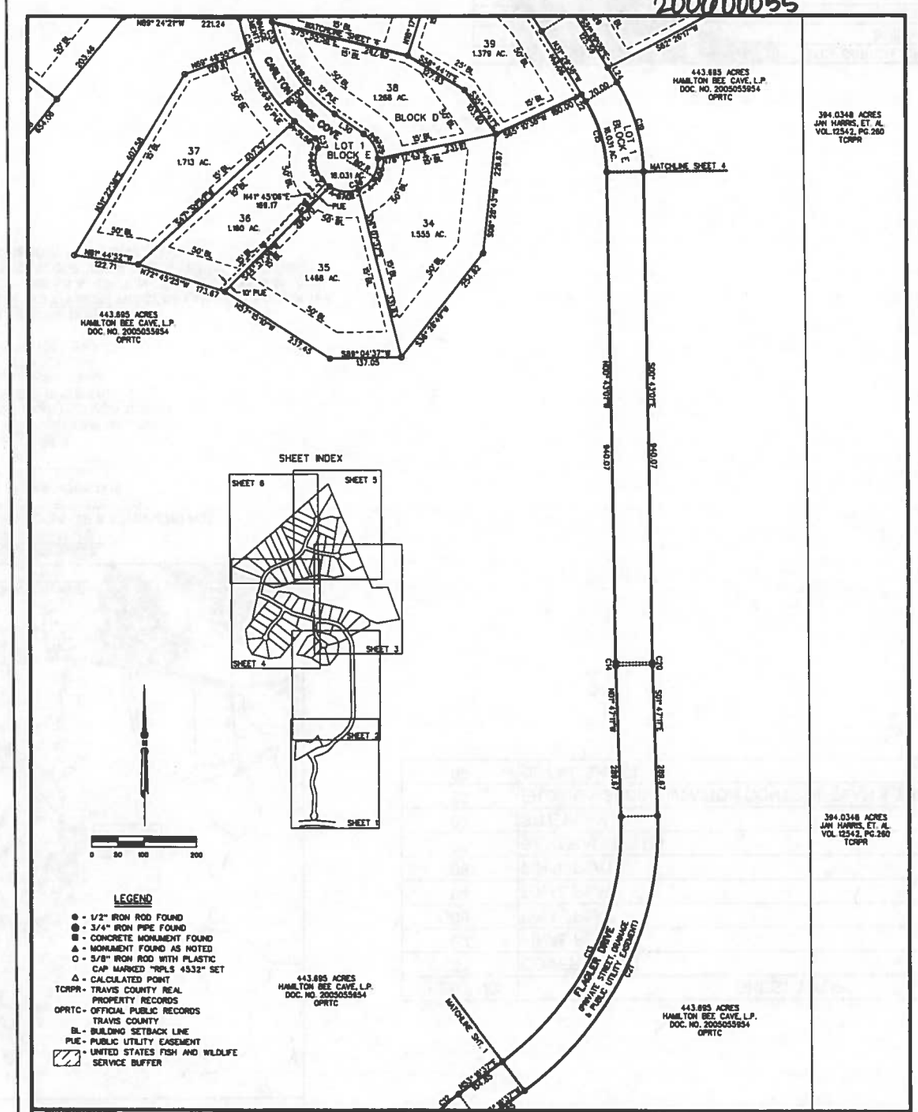

BELVEDERE
PHASE 1

RAMSEY LAND SURVEYING, L.L.C.
8718 SOUTHWEST PARKWAY
P.O. BOX 92768
AUSTIN, TEXAS 78709-2768
PHONE (512) 301-9398
FAX (512) 301-9395
rlsurvey@flash.net

NO	REVISIONS	DRN	CHK	DATE

NO.	REVISION DESCRIPTION	REVIEWED BY	DATE

Murfee Engineering Company | Texas Registered Engineering Firm F-363

BELVEDERE M.U.D.
AMENITY CENTER IMPROVEMENTS
FINAL PLAT

1101 Capital of Texas Highway South, Building D, Suite 110, Austin, Texas 78746, (512) 327-4204

JOB NO. 17-031-20	SCALE: AS NOTED	SHEET:	02 OF 11
DESIGNED BY: BC		DATE:	5/9/2018
DRAWN BY: MLH		DATE:	5/9/2018

FILE(LAYOUT): O:\17\031\20\TITLE-NOTES-DETAILS.dwg(FINAL PLAT 1)

200600055

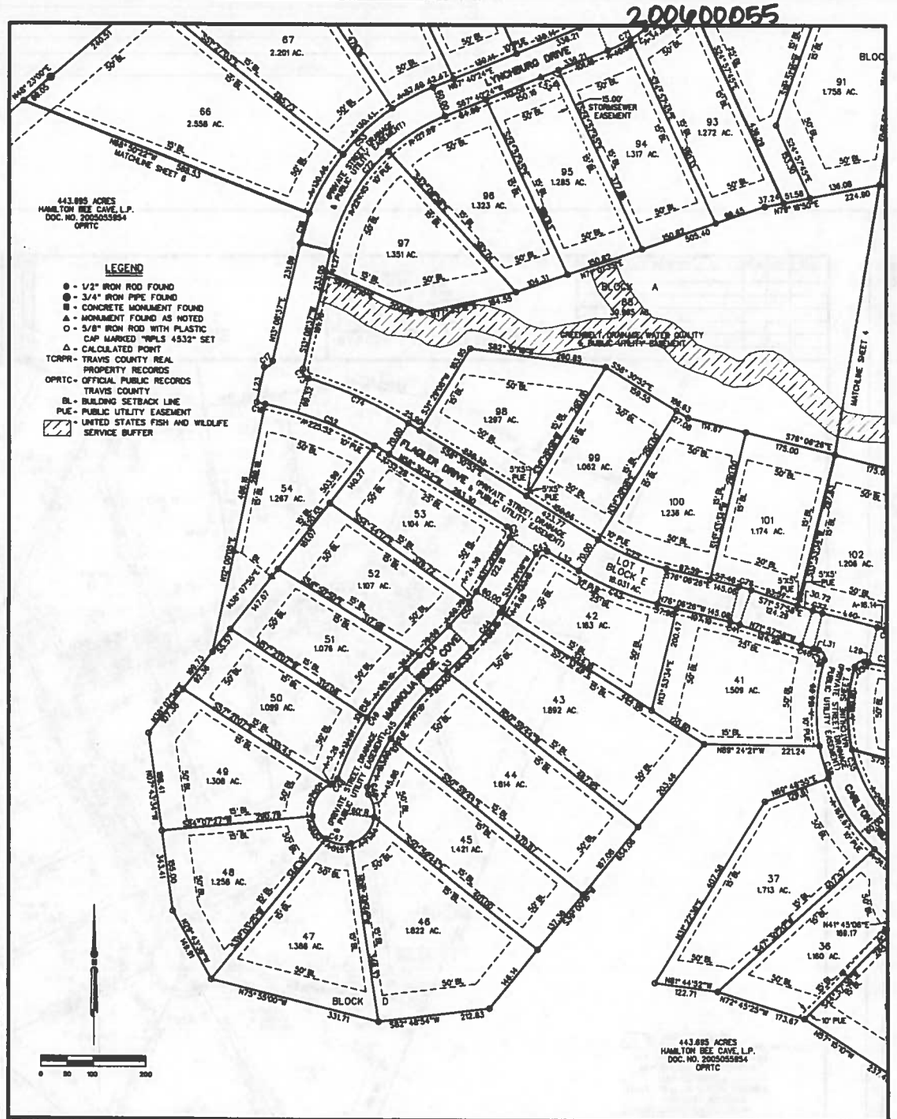

200600055

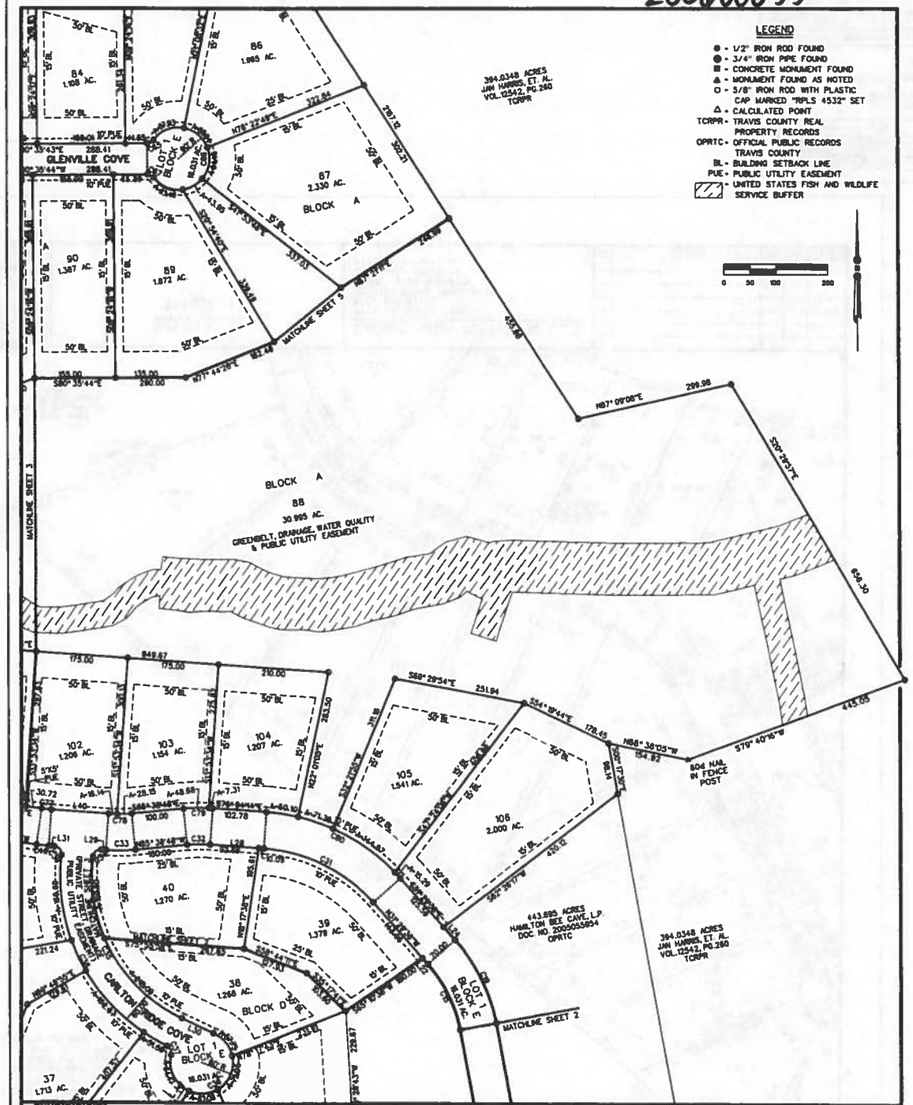

NO.	REVISION DESCRIPTION	REVIEWED BY	DATE

Murfee Engineering Company | Texas Registered Engineering Firm F-353

BELVEDERE M.U.D.

AMENITY CENTER IMPROVEMENTS

FINAL PLAT

1101 Capital of Texas Highway South, Building D, Suite 110, Austin, Texas 78746, (512) 327-6204

JOB NO. 17-031-20	SCALE: AS NOTED	SHEET:	03 OF 11
DESIGNED BY: BC		DATE:	5/9/2018
DRAWN BY: MLH		DATE:	5/9/2018

FILE(LAYOUT): O:\17\031\20\TITLE-NOTES-DETAILS.dwg(FINAL PLAT 2)

2006000055

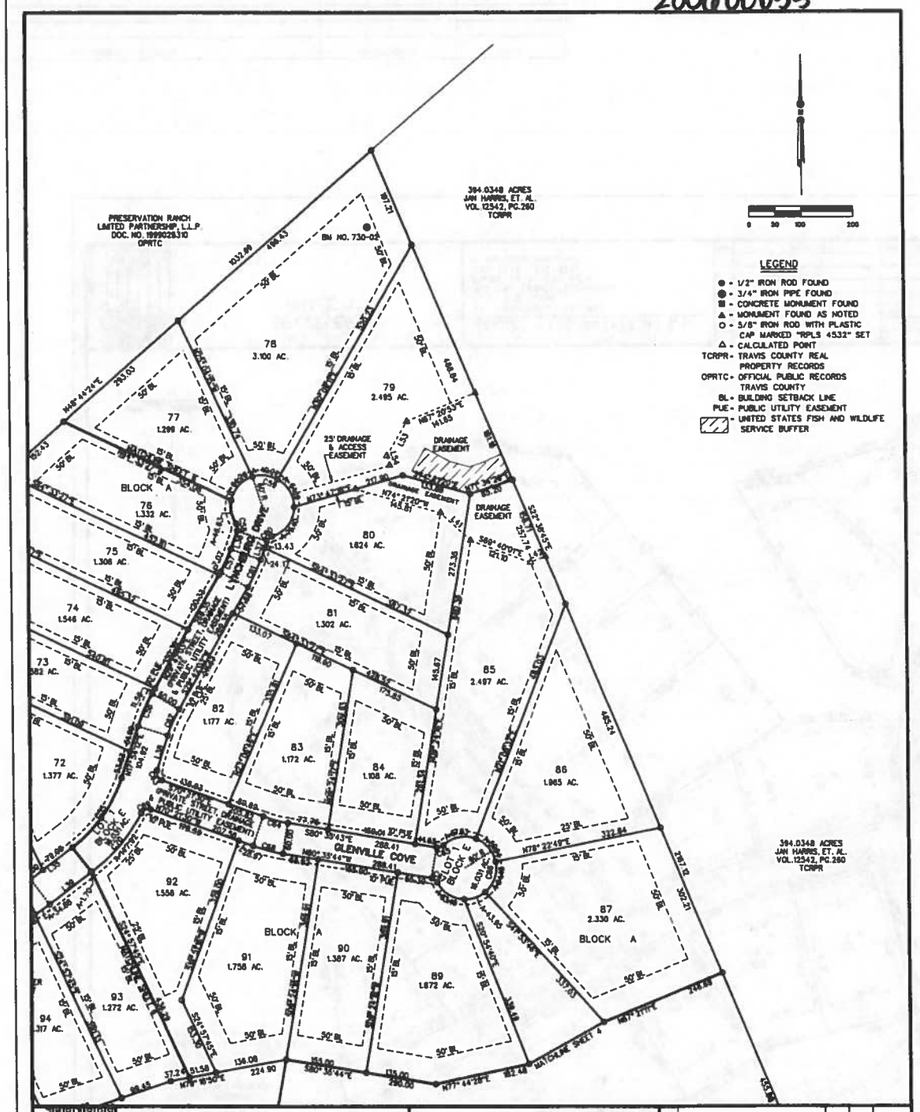

BELVEDERE
PHASE 1

RAMSEY LAND SURVEYING, L.L.C.
8716 SOUTHWEST PARKWAY
P.O. BOX 92768
AUSTIN, TEXAS 78709-2768
PHONE (512) 301-9398
FAX (512) 301-9395
rlsurvey@flash.net

NO	REVISIONS	DRN	CHK	DATE

2006000055

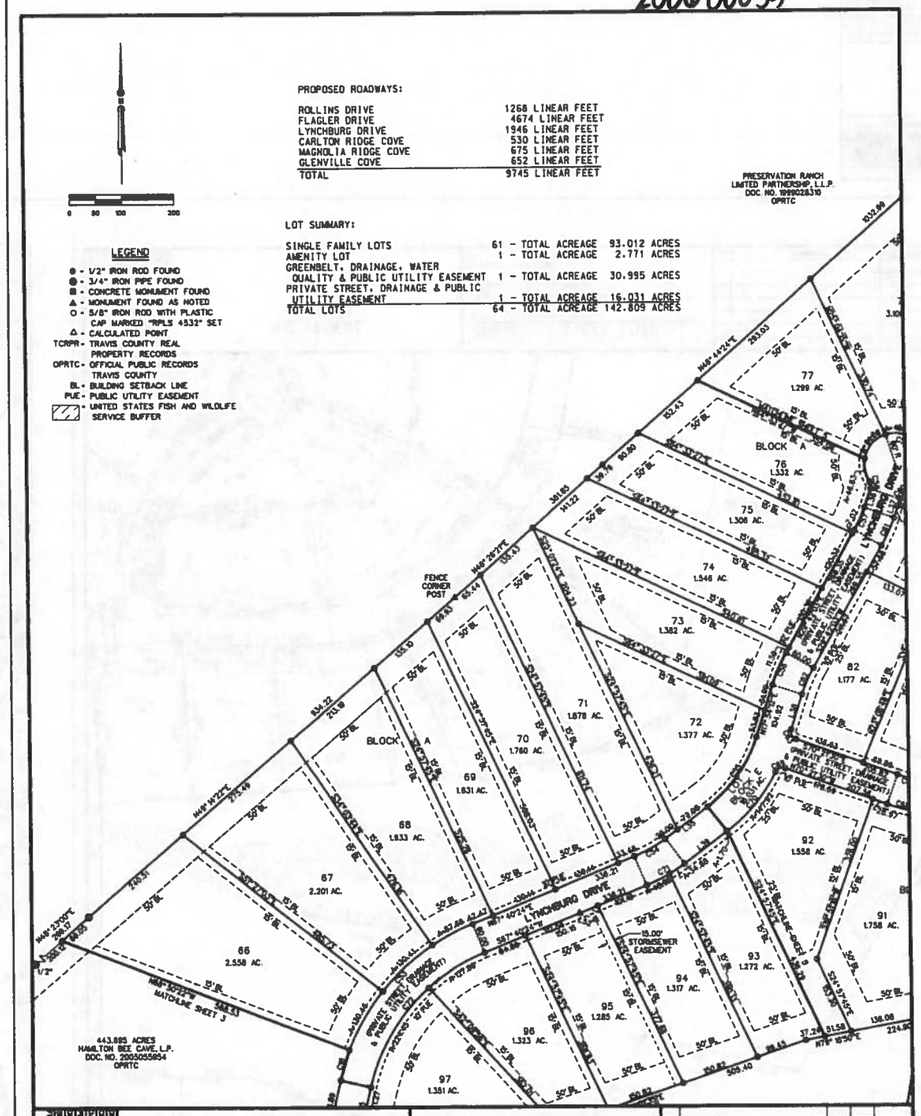

BELVEDERE
PHASE 1

RAMSEY LAND SURVEYING, L.L.C.
8716 SOUTHWEST PARKWAY
P.O. BOX 92768
AUSTIN, TEXAS 78709-2768
PHONE (512) 301-9398
FAX (512) 301-9395
rlsurvey@flash.net

NO	REVISIONS	DRN	CHK	DATE

NO	REVISION DESCRIPTION	REVIEWED BY	DATE

Murfee Engineering Company | Texas Registered Engineering Firm F-353

BELVEDERE M.U.D.
AMENITY CENTER IMPROVEMENTS
FINAL PLAT

1101 Capital of Texas Highway South, Building D, Suite 110, Austin, Texas 78746, (512) 327-9204

JOB NO 17-031-20	SCALE: AS NOTED	SHEET	04 OF 11
DESIGNED BY: BC		DATE.	5/9/2018
DRAWN BY: MLH		DATE.	5/9/2018

FILE(LAYOUT): O:\17031\20\TITLE-NOTES-DETAILS.dwg(FINAL PLAT 3)

2006000055

STATE OF TEXAS
COUNTY OF TRAVIS

KNOW ALL MEN BY THESE PRESENTS THAT HAMILTON BEE CAVE, LP, BY AND THROUGH ITS GENERAL PARTNER, JOEL ROSBUCK, OWNER OF 142.808 ACRES OF LAND SITUATED IN THE SAMUEL WILDY SURVEY NO. 528, ABSTRACT 1, BEING A PORTION OF THAT CERTAIN 443.885 ACRES OF LAND CONVEYED TO US BY DEED RECORDED IN DOCUMENT NO. 2005066654 OF THE OFFICIAL PUBLIC RECORDS OF TRAVIS COUNTY, TEXAS, DO HEREBY SUBDIVIDE SAID 142.808 ACRES OF LAND TO BE KNOWN AS "BELVEDERE PHASE 1" IN ACCORDANCE WITH CHAPTER 232 OF THE TEXAS LOCAL GOVERNMENT CODE, AND DO HEREBY DEDICATE TO THE PUBLIC THE EASEMENTS AS SHOWN HEREON UNLESS OTHERWISE INDICATED AND DO HEREBY DEDICATE TO THE OWNERS OF THE LOTS IN THE SUBDIVISION THE PRIVATE STREETS SHOWN HEREON, SUBJECT TO ANY EASEMENTS AND OR RESTRICTIONS HERETOFORE GRANTED AND NOT RELEASED. THE MAINTENANCE AND PAVEMENT OF REAL PROPERTY TAKES ON SUCH PRIVATE STREETS, ROLLINS DRIVE, FLAGLER DRIVE, LYNCHBURG BEND, CARLTON BEND COVE, BARNILLA BEND COVE AND SLEDVALE COVE ARE THE RESPONSIBILITY OF THE OWNERS OF THE SUBDIVISION OR ANY ENTITY CONSTRUED HEREUNDER. ACCEPTANCE HEREIN THAT CERTAIN PORTION OF ROADWAY AS DEDICATED BY PLAT FOR THE TRAVIS COUNTY BEEN OF RECORD, AS EXPRESS EXCEPTION IS HEREBY MADE TO THE ACCEPTANCE AND MAINTENANCE BY THE COUNTY OF THE ROADWAY STREETS AND ANY OTHER AREA AS FOR THE USE OF THE PUBLIC FOR ALL GENERAL PURPOSES INCLUDING AND EXPRESSLY INCLUDING FOR AND PUBLIC TRANSPORTATION, GAS AND WATER MAINS, SEWERS, POWER, AND ANY OTHER PURPOSES THAT ALL GENERAL PUBLIC USES. THE COUNTY SHALL NOT BE RESPONSIBLE OR LIABLE FOR ANY DAMAGE OCCURRING TO THE SURFACE OF THE SAID PRIVATE STREETS AND ANY OTHER AREA AS A RESULT OF ANY SUCH USE BY GOVERNMENTAL VEHICLES.

IN WITNESS WHEREOF, HAMILTON BEE CAVE, LP HAVE CAUSED THESE PRESENTS TO BE EXECUTED BY THEIR GENERAL PARTNER, THIS 1st DAY OF February, A.D., 2006

HAMILTON BEE CAVE, LP
A DELAWARE LIMITED PARTNERSHIP

JOEL ROSBUCK, GENERAL PARTNER
9900 SHOAL PLAZA SUITE 205
DALLAS, TEXAS 75220

THIS INSTRUMENT WAS ACKNOWLEDGED BEFORE ME ON THIS THE DAY 1st DAY OF February, 2006, A.D. BY JOEL ROSBUCK, GENERAL PARTNER, HAMILTON BEE CAVE LP ON BEHALF OF SAID PARTNERSHIP.

NOTARY PUBLIC IN AND FOR TRAVIS COUNTY, TEXAS

SURVEYOR'S STATEMENT:

KNOW ALL MEN BY THESE PRESENTS, THAT I, THE UNDERSIGNED, A REGISTERED PROFESSIONAL LAND SURVEYOR IN THE STATE OF TEXAS, HEREBY CERTIFY THAT THIS PLAT COMPLIES WITH THE SURVEY RELATED REQUIREMENTS OF CHAPTER 13 AUSTIN REQUIREMENTS, TRAVIS COUNTY SUBDIVISION SPECIFICATIONS AND FURTHER STATES THAT THIS PLAT IS PREPARED FROM AN ACTUAL SURVEY OF THE PROPERTY MADE UNDER MY SUPERVISION ON THE GROUND.

1-31-06
DATE

WILLIAM H. RAMSEY
REGISTERED PROFESSIONAL LAND SURVEYOR NO. 4532
RAMSEY LAND SURVEYING, L.L.C.
P.O. BOX 92768
AUSTIN, TX 78709-2768

THE 100-YEAR FLOOD PLAIN IS CONTAINED WITHIN THE DRAINAGE EASEMENT AS SHOWN HEREON. NO PORTION OF THIS TRACT IS WITHIN THE DESIGNATED FLOOD HAZARD AREA AS SHOWN ON THE FEDERAL EMERGENCY MANAGEMENT AGENCY (FEMA) FLOOD INSURANCE RATE MAP (FIRM) 48453C0-370E, TRAVIS COUNTY, TEXAS, DATED JUNE 19, 1993, COMMUNITY 480624.

1-31-06
DATE

JOHN A. CLARK, P.E.
REGISTERED PROFESSIONAL ENGINEER NO. 81388
LJA ENGINEERING & SURVEYING, INC.
3301 HWY. 290 WEST
SUITE 150
AUSTIN, TEXAS 78735
PHONE : (512) 439-4700, FAX : (512) 439-478

GENERAL NOTES:

1. NO LOT IN THIS SUBDIVISION SHALL BE OCCUPIED UNTIL CONNECTED TO A MUNICIPAL WATER DISTRIBUTION SYSTEM OR AN APPROVED ONSITE WATER WELL.
2. NO LOT IN THIS SUBDIVISION SHALL BE OCCUPIED UNTIL CONNECTED TO AN APPROVED PUBLIC SEWER SYSTEM OR APPROVED PRIVATE SEWAGE DISPOSAL SYSTEM.
3. NO OBJECTS, INCLUDING, BUT NOT LIMITED TO BUILDINGS, FENCES, OR LANDSCAPING SHALL BE ALLOWED IN A DRAINAGE EASEMENT, EXCEPT AS APPROVED BY TRAVIS COUNTY.
4. PROPERTY OWNER OR HIS/HER ASSIGNS SHALL PROVIDE FOR ACCESS TO THE DRAINAGE EASEMENT AS MAY BE NECESSARY AND SHALL NOT PROHIBIT ACCESS BY TRAVIS COUNTY FOR INSPECTION OR MAINTENANCE OF SAID EASEMENT.
5. ALL DRAINAGE EASEMENTS ON PRIVATE PROPERTY SHALL BE MAINTAINED BY THE OWNER OR HIS/HER ASSIGNS.
6. LOT 88, BLOCK A, IS DESIGNATED "COMMON AREA" AND IS OWNED AND MAINTAINED AS amenity purpose BY THE HOMEOWNER'S ASSOCIATION, SEE DOCUMENT NUMBER 2006000055 TRAVIS COUNTY PROPERTY RECORDS.
7. TRAVIS COUNTY DEVELOPMENT PERMIT REQUIRED PRIOR TO ANY SITE DEVELOPMENT.
8. ALL STREETS & DRAINAGE FACILITIES WILL BE DESIGNED IN ACCORDANCE TO TRAVIS COUNTY CONSTRUCTION STANDARDS FOR STREET & DRAINAGE IN SUBDIVISIONS.
9. WATER SERVICE TO BE PROVIDED BY LOWER COLORADO RIVER AUTORITY OR STATE APPROVED WATER SYSTEM.
10. WASTEWATER SERVICE TO BE PROVIDED BY INDIVIDUAL ON-SITE WASTEWATER DISPOSAL.
11. ELECTRIC SERVICE TO BE PROVIDED BY PEDERNALES ELECTRIC CO-OP.
12. TELEPHONE SERVICE TO BE PROVIDED BY SBC.
13. PROJECT IS LOCATED WITHIN TRAVIS COUNTY AND IS NOT LOCATED WITHIN ANY OTHER CITY'S EXTRA TERRITORIAL JURISDICTION (ETJ).
14. OVERALL IMPERVIOUS COVER WITHIN THIS BELVEDERE SUBDIVISION SHALL NOT EXCEED FIFTEEN PERCENT (15%). INDIVIDUAL PHASES WITHIN THE BELVEDERE SUBDIVISION MAY EXCEED FIFTEEN (15%) SO LONG AS OVERALL IMPERVIOUS COVER DOES NOT EXCEED FIFTEEN (15%).
15. ALL ROADWAYS SHALL BE MAINTAINED BY THE HOMEOWNERS ASSOCIATION.
16. THE 0.85 ACRE PARKLAND REQUIREMENT WILL BE MET WITH A COMBINATION OF PARKLAND FEES AND 50 PERCENT CREDIT FOR THE PRIVATE GREENBELT AND AMENITY LOTS.
17. LOT 1, BLOCK "D" TO BE OWNED AND MAINTAINED BY THE HOME OWNERS ASSOCIATION.

EASEMENTS:

1. PRIVATE STREETS, DRAINAGE, PUBLIC UTILITY AND ACCESS EASEMENTS AS SHOWN.
2. THERE SHALL BE A 10 FOOT PUBLIC UTILITY EASEMENT ADJACENT TO ALL PRIVATE STREETS.

COMMISSIONERS' COURT RESOLUTION:

IN APPROVING THIS PLAT, THE COMMISSIONERS COURT OF TRAVIS COUNTY, TEXAS, ASSUMES NO OBLIGATION TO BUILD THE STREETS, ROADS, AND OTHER PUBLIC THOROUGHFARES SHOWN ON THIS PLAT OR ANY BRIDGES OR CULVERTS IN CONNECTION THEREWITH. THE BUILDING OF ALL STREETS, ROADS, OR OTHER PUBLIC THOROUGHFARES OR IN CONNECTION THEREWITH, IS THE RESPONSIBILITY OF THE OWNER(S) AND/OR DEVELOPER OF THE TRACT OF LAND SHOWN BY THIS PLAT IN ACCORDANCE WITH PLANS AND SPECIFICATIONS PRESCRIBED BY THE COMMISSIONERS COURT OF TRAVIS COUNTY, TEXAS.

THE OWNER(S) OF THE SUBDIVISION SHALL CONSTRUCT THE SUBDIVISION'S STREET AND DRAINAGE IMPROVEMENTS (THE "IMPROVEMENTS") TO THE COUNTY STANDARDS IN ORDER FOR THE COUNTY TO ACCEPT THE PUBLIC IMPROVEMENTS FOR MAINTENANCE OR TO RELEASE FISCAL SECURITY POSTED TO SECURE PRIVATE IMPROVEMENTS. TO SECURE THIS OBLIGATION THE OWNER(S) MUST POST FISCAL SECURITY WITH THE COUNTY IN THE AMOUNT OF THE ESTIMATED COST OF THE IMPROVEMENTS. THE FISCAL SECURITY TO SECURE SUCH CONSTRUCTION IS A CONTINUING OBLIGATION BINDING ON THE OWNER(S) AND THEIR SUCCESSORS AND ASSIGNS UNTIL THE PUBLIC IMPROVEMENTS HAVE BEEN ACCEPTED FOR MAINTENANCE BY THE COUNTY, OR THE PRIVATE IMPROVEMENTS HAVE BEEN CONSTRUCTED AND ARE PERFORMING TO COUNTY STANDARDS.

THE AUTHORIZATION OF THIS PLAT BY THE COMMISSIONERS COURT FOR FILING ON THE SUBSEQUENT ACCEPTANCE FOR MAINTENANCE BY TRAVIS COUNTY, TEXAS, OF ROADS AND STREETS IN THE SUBDIVISION DOES NOT OBLIGATE THE COUNTY TO INSTALL STREET NAME SIGNS OR DIRECT TRAFFIC CONTROL SIGNS SUCH AS SPEED LIMIT, STOP SIGNS, YIELD SIGNS, WHICH IS CONSIDERED TO BE A PART OF THE DEVELOPER'S RESPONSIBILITY.

BENCHMARK:

NO. 730-01, BCM NAIL 480' SOUTHEAST OF THE SOUTHWEST CORNER OF LOT 1, BLOCK D AND 114 FEET WEST OF THE WEST R.O.W. LINE OF ROLLINS DRIVE, ELEVATION = 1117.82.

NO. 730-02, 1/2 INCH IRON ROD WITH PLASTIC CAP MARKED "J.E. GERON RPLS 4398" 180 FEET SOUTH OF THE NORTH CORNER OF LOT 78, BLOCK A, ELEVATION = 1042.97

TRAVIS COUNTY ON-SITE WASTEWATER PROGRAM PLAT NOTES SUBDIVISIONS UTILIZING ON-SITE WASTEWATER SYSTEMS

1. NO STRUCTURE IN THIS SUBDIVISION SHALL BE OCCUPIED UNTIL CONNECTED TO A PUBLIC SEWER SYSTEM OR A PRIVATE ON-SITE SEWAGE DISPOSAL SYSTEM, WHICH HAS BEEN APPROVED BY THE TRAVIS COUNTY ON-SITE WASTEWATER PROGRAM.
2. NO STRUCTURE IN THIS SUBDIVISION SHALL BE OCCUPIED UNTIL CONNECTED TO A POTABLE WATER SUPPLY FROM AN APPROVED PUBLIC WATER SYSTEM.
3. NO ON-SITE SEWAGE DISPOSAL SYSTEM MAY BE INSTALLED WITHIN 100 FEET OF A PRIVATE WATER WELL NOR MAY AN ON-SITE WASTEWATER DISPOSAL SYSTEM BE INSTALLED WITHIN 150 FEET OF A PUBLIC WATER WELL.
4. NO CONSTRUCTION MAY BEGIN ON ANY LOT IN THIS SUBDIVISION UNTIL PLANS FOR THE PRIVATE ON-SITE SEWAGE DISPOSAL SYSTEM ARE SUBMITTED TO AND APPROVED BY THE TRAVIS COUNTY ON-SITE WASTEWATER PROGRAM.
5. ALL DEVELOPMENT ON ALL LOTS IN THIS SUBDIVISION MUST BE IN ACCORDANCE WITH THE MINIMUM REQUIREMENTS OF TEXAS ADMINISTRATIVE CODE CHAPTER 285 AND TRAVIS COUNTY CODE CHAPTER 48.
6. LOTS IN THIS SUBDIVISION ARE LIMITED TO A SINGLE-FAMILY RESIDENCE.
7. THESE RESTRICTIONS ARE ENFORCEABLE BY THE TRAVIS COUNTY ON-SITE WASTEWATER PROGRAM AND/OR LOT OWNERS WITHIN THE SUBDIVISION.

2-9-2006
DATE

ROBERT TURNER
DIVISION MANAGER
PLANNING AND ENGINEERING SERVICE
TRAVIS COUNTY-TNR

ETJ NOTE:

NO PORTION OF THIS TRACT IS WITHIN THE CITY OF AUSTIN OR THE ETJ OF THE CITY OF AUSTIN.

for 2-10-2006
DATE

DOE PANTALEON, DIRECTOR
WATERSHED PROTECTION & DEVELOPMENT REVIEW DEPARTMENT

STATE OF TEXAS
COUNTY OF TRAVIS

I, DANA DEBEAUVOIR, CLERK OF TRAVIS COUNTY, TEXAS DO HEREBY CERTIFY THAT THE FOREGOING INSTRUMENT OF WRITING WITH ITS CERTIFICATE OF AUTHENTICATION WAS FILED FOR RECORD IN MY OFFICE, ON THE 23rd DAY OF February, 2006, A.D., AT 1:15 O'CLOCK P.M., AND DULY RECORDED ON THE 23rd DAY OF February, 2006, A.D., AT 3:15 O'CLOCK P.M. IN THE OFFICIAL PUBLIC RECORDS OF SAID COUNTY AND STATE, IN DOCUMENT NO. 2006000055
WITNESS MY HAND AND SEAL OF OFFICE OF THE COUNTY CLERK, THIS 23rd DAY OF February, 2006, A.D.

DANA DEBEAUVOIR, COUNTY CLERK,
TRAVIS COUNTY, TEXAS
R. Herrera
DEPUTY
R. HERRERA

STATE OF TEXAS
COUNTY OF TRAVIS

I, DANA DEBEAUVOIR, CLERK OF THE COUNTY COURT, OF TRAVIS COUNTY, TEXAS, DO HEREBY CERTIFY THAT ON THE 21st DAY OF February, 2006, A.D., THE COMMISSIONERS' COURT OF TRAVIS COUNTY, TEXAS, PASSED AN ORDER AUTHORIZING THE FILING FOR RECORD OF THIS PLAT, AND THAT SAID ORDER WAS DULY ENTERED IN THE MINUTES OF SAID COURT.

WITNESS MY HAND AND SEAL OF OFFICE OF THE COUNTY COURT OF SAID COUNTY, THE 23rd DAY OF February, 2006, A.D.

DANA DEBEAUVOIR, COUNTY CLERK, TRAVIS COUNTY, TEXAS
Gilbert Peter G. Porter
DEPUTY

BELVEDERE
PHASE 1

RAMSEY LAND SURVEYING, L.L.C.
8710 SOUTHWEST PARKWAY
P.O. BOX 92768
AUSTIN, TEXAS 78709-2768
PHONE (512) 301-9398
FAX (512) 301-9395
rlsurvey@flash.net

NO	REVISIONS	DRN	CHK	DATE
1	BY SURVEYOR			2/1/06

NO	REVISION DESCRIPTION	REVIEWED BY	DATE

Murfee Engineering Company | Texas Registered Engineering Firm F-353

BELVEDERE M.U.D.

AMENITY CENTER IMPROVEMENTS

FINAL PLAT

1101 Capital of Texas Highway South, Building D, Suite 110, Austin, Texas 78746, (512) 327-9204

JOB NO. 17-031-20	SCALE: AS NOTED	SHEET:	05 OF 11
DESIGNED BY: BC		DATE:	5/9/2018
DRAWN BY: MLH		DATE:	5/9/2018

FILE(LAYOUT): O:\17\031\20\TITLE-NOTES-DETAILS.dwg(FINAL PLAT 4)

TRAVIS COUNTY STANDARD CONSTRUCTION NOTES FOR SITE DEVELOPMENT

1 Each driveway must be constructed in accordance with Travis County Code Section 82 302(g),
and each drainage structure or system must be constructed in accordance with the City of Austin
Drainage Criteria Manual, unless other design criteria are approved by Travis County
2. Before beginning any construction, the owner must obtain a Travis County development permit and post the development permit, the TCEQ Site Notice, and any other required permits at the job site.
3. Construction may not take place within Travis County right-of-way until after the owner has
submitted a traffic control plan to Travis County and obtained written approval of the traffic control plan from Travis County
4 The contractor and primary operator shall follow the sequence of construction and the SWP3 in
these approved plans. The contractor and primary operator shall request Travis County inspection at specific milestones in the sequence of the construction of the site development corresponding to the priority inspections specified in Construction Sequencing notes in these approved plans. Development outside the limits of construction specified in the approved permit and construction plans is prohibited
5 Before beginning any construction, all Storm Water Pollution Prevention Plan (SWP3) requirements shall be met, and the first phase of the temporary erosion control (ESC) plan installed with a SWP3 Inspection Report uploaded to mypermitnow org. All SWP3 and ESC Plan measures and primary operator SWP3 inspections must be performed by the primary operator in accordance with the approved plans and SWP3 and ESC Plan Notes throughout the construction process
6 Before starting construction, the owner or contractor or their designated representatives shall submit a request via the mypermitnow org customer portal for Travis County to request and schedule a mandatory Preconstruction Conference and ESC Inspection. If further assistance is needed, the TNR Planning and Engineering Division staff or TNR Storm Water Management Program staff can be contacted by telephone at 512-854-6383
7 The contractor shall keep Travis County TNR assigned inspection staff current on the status of site development and utility construction. The contractor shall notify Travis County and request priority inspections through the mypermitnow org customer portal for Travis County in accordance with the specific milestones in the Construction Sequencing notes in these approved plans.
8. Contour data source: Capitol Survey Co. Inc. 03-30-2018
9 Fill material must be managed and disposed of in accordance with all requirements specified in the approved plans, SWP3, and the Travis County Code. The contractor shall stockpile fill and construction materials only in the areas designated on the approved plans and not within the
100-year flood plain, wastewater setback, Critical Environmental Feature setback, or outside the
limits of construction. Disposal of solid waste materials, as defined by State law (e.g. litter tires, decomposable wastes, etc.) is prohibited in permanent fill sites.
10 Before disposing any excess fill material off-site, the contractor or primary operator must provide
the County Inspector documentation that demonstrates that all required permits for the proposed disposal site location, including Travis County, TCEQ Notice, and other applicable
development permits, have been obtained. The owner or primary operator must revise the SWP3 and ESC Plan if handling or placement of excess fill on the construction site is revised from the existing SWP3. If the fill disposal location is outside Travis County or does not require a development permit, the contractor or primary operator must provide the County Inspector the site address, contact information for the property owner of the fill
11. The design engineer is responsible for the adequacy of the construction plans. In reviewing the
construction plans, Travis County will rely upon the adequacy of the work of the design engineer
12 In the event of any conflicts between the content in the SWP3 Site Notebook and the content in the construction plans approved by Travis County, the construction plans shall take precedence.
13. A minimum of two survey benchmarks shall be set, including description, location, and elevation,
the benchmarks should be tied to a Travis County control benchmark when possible
14. Any existing pavement, curbs, sidewalks, or drainage structures within County right-of-way which are damaged, removed, or silted, will be repaired by the contractor at owner or contractor's expense before approval and acceptance of the construction by Travis County
15. Call the Texas Excavation Safety System at 8-1-1 at least 2 business days before beginning excavation activities.
18. All storm sewer pipes shall be Class III RCP, unless otherwise noted.
17 Contractor is required to obtain a utility installation permit in accordance with Travis County Code Section 82 901(a)(3) before any construction of utilities within any Travis County right-of- way.
18. This project is located on Flood Insurance Rate Map 48453C0395H.
19 Temporary stabilization must be performed in all disturbed areas that have ceased construction activities for 14 days or longer, in accordance with the standards described in the SWP3 and ESC Plan Sheet Notes.
20. Permanent site stabilization/re-vegetation must be performed immediately in all site areas which
are at final plan grade and in all site areas specified in the approved plans for phased re-vegetation, in accordance with the standards described in the SWP3 and ESC Plan Sheet Notes.
21 All trees within the right-of-way and drainage easements shall be saved or removed in accordance with the approved construction plans. Travis County tree preservation standards in Travis County Code Section 82 973, including installation and maintenance of all specified tree protection measures, must be followed during construction.
22. An Engineer's Concurrence Letter in accordance with Travis County Code Section 82 953 must be submitted via the mypermitnow org customer portal for Travis County when construction is substantially complete. The Engineer's Concurrence Letter must be submitted before the contractor or primary operator requests a final inspection by Travis County.
23. Site improvements must be constructed in conformance with the engineer's construction plans approved by Travis County. Non-conformance with the approved plans will delay final inspection approval by the County until plan conformance is achieved or any required plan revisions are approved.
24. Final Site Stabilization. All areas disturbed by the construction must be permanently revegetated and all temporary sediment controls and accumulated sedimentation must be removed before the County will issue a Certificate of Compliance for final site stabilization as part of final inspection and project completion. A Developers Contract, as described in the SWP3 and ESC
Notes Sheet may be executed with Travis County for conditional acceptance of a project for which has ESC Fiscal Security posted and for which all items are complete

TRAVIS COUNTY CONSTRUCTION NOTES FOR SITE DEVELOPMENT AND TRAVIS COUNTY CONSTRUCTION NOTES FOR SUBDIVISION DEVELOPMENT STREETS, DRAINAGE, WATER AND WASTEWATER

The following items apply to Exhibit 82.301 B: 1 - 15.
The following items apply to Exhibit 82.301 C: 1 - 23.

1 Driveway and drainage construction standards shall be in accordance with the requirements of the Travis County Standards unless otherwise specified and approved by Travis County
2 Prior to beginning any construction, a Travis County Basic Development Permit shall be obtained and posted on the job site. Development outside of approved construction boundaries is prohibited without a revised permit.
3. Prior to beginning any construction, all Storm Water Pollution Prevention Plan (SWP3) requirements shall be met, notices posted on site, and the first phase of temporary erosion control items shall be in place.
4 A Traffic Control Plan shall be reviewed and approved by Travis County prior to beginning construction within County right-of-way
5 The contractor shall notify Travis County Planning and Engineering Division at 854-9383 and Storm Water Management Program inspection at 854-7590 at least 48 hours prior to start of construction and to schedule a mandatory Preconstruction Conference.
6 Contour data source: Capital Survey Co. 2013
7 Contractor shall not stockpile material within the 100-year flood plain or areas outside of permit boundaries. Any regulatory permits required for disposal of excess excavated material off the permit site must be obtained from the applicable jurisdictions. Disposal of solid waste materials, as defined by State law (litter, tires, decomposable wastes, etc.) is prohibited in permanent fill sites.
8 Within Travis County right-of-way, driveways are to be constructed in accordance with City of Austin criteria, except as noted in 82.302 (g) of the Standards
9. The design engineer is responsible for the adequacy of the construction plans. In reviewing the construction plans, Travis County will rely upon the adequacy of the work of the design engineer
10 A minimum of two survey benchmarks shall be set and described per subdivision including description, location, and elevation. Tie to Travis County Standards when possible.
11 Any existing pavement, curbs, sidewalks, or drainage structures within County right-of-way which are damaged, removed, or silted, will be repaired by the contractor at his/her expense before approval of the construction.
12. The One-Call Utility System will be used. Dial Texas 811 and 1-800-545-6005 the Texas Underground Facility Notification Corporation at least 48 hours BEFORE you dig
13 All storm sewer pipes shall be Class III RCP, unless otherwise noted.
14. Contractor is required to obtain a Travis County Work in Right-of-way (utility installation notice) Permit prior to any construction of utilities within any Travis County right-of-way
15. This project is located on Flood Insurance Rate Map 48453C0395H
16. Soil data sources: USDA Weisoil Survey
17 All trees within the right-of-way and drainage easements shall be saved or removed in accordance with the 230 approved construction plans.
18. A Preconstruction Conference is required with TNR prior to start of any construction in Travis County right-of-way
19. The utility contractor shall give TNR at least 48 hours notice prior to construction.
20. Contractor shall keep the TNR Planning and Engineering Services Division (473-9383) current on the status of each stage of construction activity.
21 TNR approval of the construction is required on all work completed prior to acceptance and commencement of one-year performance period
22 The location of a concrete washout will be determined once construction has begun and will be properly notated on the site map at that time
23 Place filter fabric on the upstream face of all rock berms downstream of disturbed areas to increase sedimentation effect.

GENERAL CONSTRUCTION NOTES

1 All construction shall be in accordance with the Travis County Standard Specifications

2 Benchmarks for the project are as follows

No. 730-01. 806 nail 456" southeast of the southwest corner of Lot 1, Block D and 114 feet west of the west R.O.W. line of Rollins Drive, elevation = 1117.82'

No. 730-02, 1/2" iron rod with plastic cap marked "J. E. Gerdn RPLS 4300", 150 feet south of the north corner of Lot 78, Block A, elevation = 1242.57'

3. Barricades, built to Travis County Standard Specifications, shall be constructed on all dead-end streets and as necessary during construction to maintain job safety.

4 If blasting is planned by the contractor, a blasting permit must be secured prior to commencement of any blasting.

5. The location of any water and/or wastewater lines shown on the plans must be verified by the Lower Colorado River Authority

6. Contractor shall coordinate inspection of utility and storm sewer lines with the appropriate authorities and/or utility company prior to backfilling trenches.

7. Any fittings, valves, or other appurtenances necessary for testing of utility lines shall be provided by the contractor at no additional cost to the owner.

8. Alignment of utility and storm sewer lines shown on plans shall be achieved by deflection in pipe and pipe joints not to exceed manufacturer's recommended maximum deflection, except where specific bends and/or fittings are called for on plans.

9. The location and type of utilities and underground facilities shown on these plans are not guaranteed to be accurate or all inclusive. The contractor shall verify all depths and locations of existing utilities prior to any construction. It is the contractor's responsibility to locate and protect all existing utilities. In addition to normal precautions when excavating, use extra caution when excavating within 25 feet or any utilities shown on the plans.

10. It shall be the responsibility of the contractor to repair, at his expense, all utilities, pavement, curb, fences, and any other items damaged during construction regardless of whether these items are shown on the plans.

11. Whenever existing utilities, indicated or not on plans, present obstructions to grade or alignment of proposed pipe, contractor is to immediately notify engineer who will determine if existing improvements are to be relocated or if the grade and alignment of proposed pipe is to be changed.

12. Disposal of spoil material will be the responsibility of the contractor. Spoil shall be temporarily disposed of at the designated onsite temporary disposal area and permanently removed to a permitted spoil disposal area. The contractor shall be responsible for obtaining necessary permits in conjunction with this work.

13. Cleanup - upon completion and before making application for acceptance of the work, the contractor shall clean all streets and all ground occupied by him in connection with the work of all rubbish, excess materials, excess excavated materials, temporary structures, and equipment. All parts of the work shall be left in a neat and presentable condition satisfactory to the owner and governmental bodies having jurisdiction prior to submittal of the final payment. Final cleanup payment is considered as incidental to unit prices on the bid proposal.

14. Dewatering, if necessary, shall be considered incidental to the work and shall not constitute a basis for additional payment. CONTRACTOR shall comply with requirements of 30 TAC Chapter 307, the Water Code of Texas Chapter 26, and the conditions of the Stormwater Pollution Prevention Plan and the General Permit TXR-150000

15. The contractor shall confine his work to within the limits of construction which are generally defined by the limits of right-of-way and/or easements, except for the detour route. The limits of construction for the detour are as indicated on the plans. No clearing is allowed for the installation of silt fences or rock berms which are located outside of the right-of-way unless authorized by the owner or his designated representative

16. All concrete shall be class "A" with a minimum 28 day compressive strength of 3,000 P.S.I., unless otherwise noted.

17. All reinforced steel shall be ASTM A615m, grade 60, unless otherwise noted.

NO.	REVISION DESCRIPTION	REVIEWED BY	DATE

EXHIBIT 82.301B TRAVIS COUNTY STANDARD CONSTRUCTION NOTES FOR SITE DEVELOPMENT

1 Each driveway must be constructed in accordance with Travis County Code Section 82 302(g),
and each drainage structure or system must be constructed in accordance with the City of Austin
Drainage Criteria Manual, unless other design criteria are approved by Travis County
2 Before beginning any construction, the owner must obtain a Travis County development permit and post the development permit, the TCEQ Site Notice, and any other required permits at the job site.
3. Construction may not take place within Travis County right-of-way until after the owner has
submitted a traffic control plan to Travis County and obtained written approval of the traffic control plan from Travis County
4 The contractor and primary operator shall follow the sequence of construction and the SWP3 in
these approved plans. The contractor and primary operator shall request Travis County inspection at specific milestones in the sequence of the construction of the site development corresponding to the priority inspections specified in Construction Sequencing notes in these approved plans. Development outside the limits of construction specified in the approved permit and construction plans is prohibited
5 Before beginning any construction, all Storm Water Pollution Prevention Plan (SWP3) requirements shall be met, and the first phase of the temporary erosion control (ESC) plan installed with a SWP3 Inspection Report uploaded to mypermitnow org. All SWP3 and ESC Plan measures and primary operator SWP3 inspections must be performed by the primary operator in accordance with the approved plans and SWP3 and ESC Plan Notes throughout the construction process
6 Before starting construction, the owner or contractor or their designated representatives shall submit a request via the mypermitnow org customer portal for Travis County to request and schedule a mandatory Preconstruction Conference and ESC Inspection. If further assistance is needed, the TNR Planning and Engineering Division staff or TNR Storm Water Management Program staff can be contacted by telephone at 512-854-6383.
7 The contractor shall keep Travis County TNR assigned inspection staff current on the status of site development and utility construction. The contractor shall notify Travis County and request priority inspections through the mypermitnow org customer portal for Travis County in accordance with the specific milestones in the Construction Sequencing notes in these approved plans.
8 Contour data source: Capitol Survey Co. Inc. 03-30-2018
9 Fill material must be managed and disposed of in accordance with all requirements specified in the approved plans, SWP3, and the Travis County Code. The contractor shall stockpile fill and construction materials only in the areas designated on the approved plans and not within the
100-year flood plain, wastewater setback, Critical Environmental Feature setback, or outside the
limits of construction. Disposal of solid waste materials, as defined by State law (e.g. litter tires, decomposable wastes, etc.) is prohibited in permanent fill sites.
10 Before disposing any excess fill material off-site, the contractor or primary operator must provide
the County Inspector documentation that demonstrates that all required permits for the proposed disposal site location, including Travis County, TCEQ Notice, and other applicable
development permits, have been obtained. The owner or primary operator must revise the SWP3 and ESC Plan if handling or placement of excess fill on the construction site is revised from the existing SWP3. If the fill disposal location is outside Travis County or does not require a development permit, the contractor or primary operator must provide the County Inspector the site address, contact information for the property owner of the fill
11. The design engineer is responsible for the adequacy of the construction plans. In reviewing the
construction plans, Travis County will rely upon the adequacy of the work of the design engineer
12 In the event of any conflicts between the content in the SWP3 Site Notebook and the content in the construction plans approved by Travis County, the construction plans shall take precedence.
13. A minimum of two survey benchmarks shall be set, including description, location, and elevation,
the benchmarks should be tied to a Travis County control benchmark when possible
14. Any existing pavement, curbs, sidewalks, or drainage structures within County right-of-way which are damaged, removed, or silted, will be repaired by the contractor at owner or contractor's expense before approval and acceptance of the construction by Travis County
15. Call the Texas Excavation Safety System at 8-1-1 at least 2 business days before beginning excavation activities.
18. All storm sewer pipes shall be Class III RCP, unless otherwise noted.
17 Contractor is required to obtain a utility installation permit in accordance with Travis County Code Section 82 901(a)(3) before any construction of utilities within any Travis County right-of- way.
18. This project is located on Flood Insurance Rate Map 48453C0395H.
19. Temporary stabilization must be performed in all disturbed areas that have ceased construction activities for 14 days or longer. in accordance with the standards described in the SWP3 and ESC Plan Sheet Notes.
20 Permanent site stabilization/re-vegetation must be performed immediately in all site areas which
are at final plan grade and in all site areas specified in the approved plans for phased re- vegetation, in
accordance with the standards described in the SWP3 and ESC Plan Sheet Notes.
21 All trees within the right-of-way and drainage easements shall be saved or removed in
accordance with the approved construction plans. Travis County tree preservation standards in Travis County Code Section 82 973, including installation and maintenance of all specified tree protection measures, must be followed during construction.
22. An Engineer's Concurrence Letter in accordance with Travis County Code Section 82 953 must be submitted via the mypermitnow org customer portal for Travis County when construction is substantially complete. The Engineer's Concurrence Letter must be submitted before the contractor or primary operator requests a final inspection by Travis County
23. Site improvements must be constructed in conformance with the engineer's construction plans approved by Travis County. Non-conformance with the approved plans will delay final inspection approval by the County until plan conformance is achieved or any required plan revisions are approved.
24. Final Site Stabilization. All areas disturbed by the construction must be permanently revegetated and all temporary sediment controls and accumulated sedimentation must be removed before the County will issue a Certificate of Compliance for final site stabilization as part of final inspection and project completion. A Developers Contract, as described in the SWP3 and ESC
25. Notes Sheet may be executed with Travis County for conditional acceptance of a project for which has ESC Fiscal Security posted and for which all items are complete

EXHIBIT 82.950

Pre-Construction Conference Planning and Agenda for SWP3 and ESC Plan

Before starting construction, the owner or their representative must submit a request, using the mypermitnow org customer portal for Travis County, to participate in a pre-construction conference with the designated County Inspector. Prior to the pre-construction conference request, the owner or owner's representative shall ensure the first phase of the ESC controls are installed
In conformance with the approved plans, the owner's qualified inspector has inspected the controls and verified compliance with the plans, and an SWP3 Inspection Report documenting the information has been sent to the County through the method specified by the designated County Inspector. After arranging an agreed upon date with the County and providing the initial SWP3 Inspection Report, the owner or owner's designated representative shall provide notice of the SWP3 pre-construction conference and a copy of the approved plans, if requested, to the following persons or entities at least two business days before the conference

1. Designated County Inspector(s)
2. Design engineer for the approved plans and SWP3, or their representative
3 Contractor(s)/Primary Operator(s)
4. Primary Operator's qualified inspector responsible for preparing the SWP3 Inspection Reports
5. Other stakeholders, as appropriate: municipalities, utilities, etc. The SWP3 pre-construction conference may be a standalone meeting or a part of a larger pre-construction conference, but must include an on-site inspection approval of the first phase of the project's ESC Plan by the County Inspector before construction begins. The County Inspector will discuss the following applicable items in the approved plans and the SWP3 with the participants:
1 The SWP3 Site Notebook for the project, including review of completeness, signatures, consistency with the approved construction and ESC plans, and the requirements for maintaining the SWP3 Site Notebook during the construction process.
2. The sequence of construction and ESC Plan implementation; sediment basin construction scope prior to full site grading; non-structural erosion source controls; start dates and schedule of events.
3. Sediment controls; phasing of perimeter and interior sediment controls during construction; structural erosion source controls such as drainage diversion; ESC maintenance requirements
4. Adequacy of the first ESC phase and future ESC phases to address specific site conditions, and adjustment and revision of the ESC Plan and SWP3 controls during construction
5 Temporary and permanent stabilization and re-vegetation requirements, including schedule, critical site improvements and priority re-vegetation areas.
6. On and off-site temporary and permanent spoil and fill disposal areas, haul roads, staging areas, and stabilized construction entrances.
7. Permanent water quality controls construction and County inspections, and related grading and drainage construction.
8. Supervision of the SWP3 implementation by the primary operator's designated project manager, including roles, responsibilities, and coordination when more than one operator is responsible for implementation.
9 Inspection and preparation of the weekly SWP3 Inspection Reports by the primary operator's qualified inspector; report submittal by the primary operator, and SWP3 monitoring inspections conducted by the County Inspector
10 Observation and documentation of existing site conditions adjacent to the limits of construction before construction, including waterways and potential outfall discharge routes, rights-of-way and easements, buffer zones, and critical environmental features.
11 Special site conditions and plan provisions, such as protection of waterways, critical environmental features, trees to be saved, and future homebuilding on subdivision lots
12. Rain gage location or rainfall information source to be used during construction and reporting.
13 Final inspection and acceptance requirements, including the engineer's concurrence letter, completion of revegetation coverage before the Notice of Termination is submitted by the primary operator, stabilization of residential subdivision lots, removal of temporary sediment controls, the Certificate of Compliance and release of ESC fiscal surety
14. Exchange of telephone numbers and contact information for the primary participants. The design engineer shall prepare and distribute notes, key decisions, and follow up from the preconstruction conference to all participants within three business days after completion of the conference.

TRAVIS COUNTY EMERGENCY SERVICE DISTRICT NO. 8 SUBDIVISION PLAN NOTES

1. An all-weather driving surface must be installed in locations shown on the Site Plan to be fire lanes, prior to any building construction beyond the foundation
2. Vertical clearance required for fire apparatus is 13 feet, 6 inches for full 25' width of access drives and routes for internal circulation
3. The maximum allowable driveway, drive aisle or fire lane grade is 15%
4. A certified or witnessed pressure test is required for all water models, required hydrant flow tests or sprinkler system designs.
5 An approved water supply for fire protection, either temporary or permanent, shall be made available as soon as combustible material arrives on the site
6. Hydrants must be installed with the four and one half inch steamer opening at least 18 inches above finished grade. The four and one-half inch steamer opening must face the street with a three to six foot setback (clearance) from the curb line or shoulder of the street.
7 No obstruction within a three-foot radius of any hydrant, and the four and one-half steamer opening must be totally unobstructed from the street.
8. Hydrant locations shall be identified by the installation of blue reflective markers, per Fire Department specifications
9 Hydrants shall be painted silver the bonnet and caps shall be painted the designated color per the gallons per minute (GPM) as follows:

Class AA	Light Blue	1500 or higher GPM
Class A	Green	1000 – 1499 GPM
Class B	Orange	500 – 999 GPM
Class C	Re d	Less than 500 GPM
Class D	Black	Out of Service

ADDITIONAL CONSTRUCTION NOTES:

1. If a concrete washout is to be utilized during construction add a note on the plan sheets that states that the location will be determined once construction has begun and will be properly noted on the site map at that time.
2. Postings and permits must be placed in a highly visible location onsite.
3. All erosion and sedimentation controls (ESC) must be installed prior to any disturbance on site and placed down gradient from all disturbances.
4. Install silt fence accordingly for run-on diversion or offsite sediment control depending on up or down slope, facing post side on the down gradient side.
5. All ESC used onsite must be regularly monitored and maintained as needed.
6. Mud and or dirt tracked into the roadway must be immediately removed upon discovery.
7. Excess materials that will be transported to an offsite location must have that location cleared by County Inspector.
8. Loose trash and debris must be disposed of properly onsite.
9. Initiate temporary stabilization when construction ceases in a disturbed area for 14 days.
10. Initiate permanent stabilization immediately once work has ceased and final grade has been achieved.
11. County Inspector may request additional controls be installed onsite as needed.

PERMANENT VEGETATIVE STABILIZATION

1 From September 15 to March 1, seeding is considered to be temporary stabilization only. If cool season cover crops exist where permanent vegetative stabilization is desired, the grasses shall be mowed to a height of less than one-half (½) inch and the area shall be re-seeded in accordance with Table 2 below. Alternatively, the cool season cover crop can be mowed with Bermudagrass or native seed and installed together, understanding that germination of warm-season seed typically requires soil temperatures of 60 to 70 degrees

2 From March 2 to September 14, seeding shall be with hulled Bermuda at a rate of 45 pounds per acre with a purity of 95% and a minimum pure live seed (PLS) of 0.83. Bermuda grass is a warm season grass and is considered permanent erosion control. Permanent vegetative stabilization can also be accomplished with a native plant seed mix conforming to Item 604S or 606S.

A. Fertilizer use shall follow the recommendation of a soil test. See Item 606S. Fertilizer. Applications of fertilizer (and pesticide) on City-owned and managed property requires the yearly submittal of a Pesticide and Fertilizer Application Record, along with a current copy of the applicator's license. For current copy of the record template contact the City of Austin's IPM Coordinator

B Hydromulch shall comply with Table 2, below

C Water the seeded areas immediately after installation to achieve germination and a healthy stand of plants that can ultimately survive without supplemental water. Apply the water uniformly to the planted areas without causing displacement or erosion of the materials or soil. Maintain the seeded in a moist condition favorable for plant growth. All watering shall comply with City Code Chapter 6-4 (Water Conservation), at rates and frequencies determined by a licensed irrigator or other qualified professional, and as allowed by the Austin Water Utility and current water restrictions and water conservation initiatives

D Permanent erosion control shall be acceptable when the grass has grown at least 1½ inches high with a minimum of 95 percent for the non-native mix, and 95 percent coverage for the native mix so that all areas of a site that rely on vegetation for stability must be uniformly vegetated, and provided there are no bare spots larger than 16 square feet.

E. When required, native plant seeding shall comply with requirements of the City of Austin Environmental Criteria Manual, Items 604S and 606S.

Table 2: Hydromulching for Permanent Vegetative Stabilization

Material	Description	Longevity	Typical Applications	Application Rate ‡
Bonded Fiber Matrix (BFM)	80% Organic defiberized fibers			
10% Tackifier	8 months	On slopes up to 2:1 and erosive soil conditions	2,500 to 4,000 lbs per acre (see manufacturers recommendations)	
Fiber Reinforced Matrix (FRM)	65% Organic defiberized fibers 25% Reinforcing Fibers at least 10% Tackifier	Up to 12 months	On slopes up to 1:1 and erosive soil conditions	3,000 to 4,000 lbs per acre (see manufacturers recommendations)

CONSTRUCTION SEQUENCING

1 Call TNR Construction Inspection, 473-9383, at least 48 hours prior to beginning any work. Call the One Call the One Call Center at 472-2822 and the Texas Underground Facility Notification Corporation for utility locations and obtain permit for any work within the right-of-way.

2 Install temporary erosion controls and tree protection fencing prior to any clearing and grubbing. Notify TNR when installed.

3 Deliver approved rough cut sheets to TNR Planning and Engineering Services prior to clearing and grubbing

4 Rough grade streets. No development of embankment will be permitted at this time

5 Install all utilities to be located under the proposed pavement.

6 Deliver storm sewer cut sheets to TNR Planning and Engineering Services Division of TNR.

7 Begin installation of storm sewer lines. Upon completion, revegetate as much disturbed area as possible, particularly channels and large open areas. Review and adjust temporary erosion control locations as necessary.

8. Deliver final grade cut sheets to TNR Planning and Engineering Services Division of TNR.

9 Regrade streets to subgrade.

10. Insure that all underground utility crossings are completed on all streets.

11 Install curb and gutter.

12. Lay final base course on all streets

13. Lay asphalt.

14 Lay first course base material

15. Install all traffic control signing, striping, and pavement markers.

16. Complete all underground installations within the right-of-way

17. Complete final grading and restoration of detention ponds

18 Complete permanent erosion controls and accumulated sediment after approval of TNR Inspection Division

19 Remove and dispose of temporary erosion controls and accumulated sediment after approval of TNR Inspection Division.

20. Complete any necessary final dress-up of areas disturbed by Item 18

TREE AND NATURAL AREA PROTECTION

1 All trees and natural areas shown on plan to be preserved shall be protected during construction with temporary fencing
2 Protective fences shall be erected according to City of Austin Standards for Tree Protection.
3 Protective fences shall be installed prior to the start of any site preparation work (clearing, grubbing or grading), and shall be maintained throughout all phases of the construction project.
4 Erosion and sedimentation control barriers shall be installed or maintained in a manner which does not result in soil build-up within tree drip lines
5 Protective fences shall surround the trees or group of trees, and will be located at the outermost limit of branches (drip line), for natural areas, protective fences shall follow the Limit of Construction line, in order to prevent the following
A Soil compaction in the root zone area resulting from vehicular traffic or storage of equipment or materials
B Root zone disturbances due to grade changes (greater than 6 inches cut or fill), or trenching not reviewed and authorized by the City Arborist.
C. Wounds to exposed roots, trunk or limbs by mechanical equipment.
D Other activities detrimental to trees such as chemical storage, cement truck cleaning, and fires
6 Exceptions to installing fences at tree drip lines may be permitted in the following cases
A. Where there is to be an approved grade change, impermeable paving surface, tree well or other such site development, erect the fence approximately 2 to 4 feet beyond the area disturbed.
B. Where permeable paving is to be installed within a tree's drip line, erect the fence at the outer limits of the permeable paving area (prior to site grading so that this area is graded separately prior to paving installation to minimized root damage).
C Where trees are close to proposed buildings, erect the fence to allow 6 to 10 feet of work space between the fence and the building.
D Where there are severe space constraints due to tract size, or other special requirements, contact the City Arborist at 974-1876 to discuss alternatives

Special Note: For the protection of natural areas, no exceptions to installing fences at the Limit of Construction line will be permitted

7 Where any of the above exceptions result in a fence being closer than 4 feet to a tree trunk, protect the trunk with strapped-on planking to a height of 8 ft (or to the limits of lower branching) in addition to the reduced fencing provided
8. Trees approved for removal shall be removed in a manner which does not impact trees to be preserved
9 Any roots exposed by construction activity shall be pruned flush with the soil. Backfill root areas with good quality top soil as soon as possible. If exposed root areas are not backfilled within 2 days, cover them with organic material in a manner which reduces soil temperature and minimizes water loss due to evaporation.
10 Any trenching required for the installation of landscape irrigation shall be placed as far from existing tree trunks as possible
11 No landscape topsoil dressing greater than 4 inches shall be permitted within the drip line of trees. No soil is permitted on the root flare of any tree
12 Pruning to provide clearance for structures, vehicular traffic and equipment shall take place before damage occurs (ripping of branches, etc.).
13 All finished pruning shall be done according to recognized, approved standards of the industry (Reference the National Arborist Association Pruning Standards for Shade Trees available on request from the City Arborist).
14 Deviations from the above notes may be considered ordinance violations if there is substantial non-compliance or if a tree sustains damage as a result.

Murfee Engineering Company | Texas Registered Engineering Firm F-353

STATE OF TEXAS
BRYCE D. CANADY
123424
LICENSED PROFESSIONAL ENGINEER
5-10-18

BELVEDERE M.U.D.
AMENITY CENTER IMPROVEMENTS
GENERAL NOTES

1101 Capital of Texas Highway South, Building D, Suite 110, Austin, Texas 78746, (512) 327-6204

JOB NO. 17-031-20	SCALE: AS NOTED	SHEET	06 OF 11
DESIGNED BY: BC		DATE:	5/9/2018
DRAWN BY: MLH		DATE:	5/9/2018

FILE(LAYOUT): O:\17\031\09\TITLE-NOTES-DETAILS.dwg(GENERAL NOTES)

USFWS BUFFER

PROP. DRAINAGE SWALE

12"cmp

STONE CULVERT

SWIMMING POOL EXISTING COPING EL= 1129.0

25'x32' PROP. BUILDING

FF. 1132'

PROP. PERVIOUS SIDEWALK

ICV

SEPTIC DRAIN LINES

EXISTING PLAYSCAPE

AMENITY LOT BLOCK D 1 2.771 AC.

PROP. DECOMPOSED GRANITE PARKING W/CURB

LAKEWOOD RIDGE COVE

EXISTING SPORT COURT

BENCH

PET POOP BAGS

WM

T/PED

EPB

PVC/SO

EXISTING MAIL KIOSK

STOCK POND

COMMUNITY CENTER EXISTING F.F. EL= 1129.0

EXISTING PARKING

ROCK WALL

SEPTIC TANK

ELEC OUTLET

PROPANE TANK

JOGGING PATH

PROP. PARKING LOT

SEPTIC DRAIN LINE

FLAGLER DR.

PROP. 36" CMP CULVERT

ROLLINS DR.

TAG#	SIZE	DESCRIPTION
4002	17 "	LIVE OAK
4011	10 "	LIVE OAK
4012	10 "	LIVE OAK
4013	8 "	LIVE OAK
4014	9 "	LIVE OAK
4015	8 "	LIVE OAK
4018	13 "	LIVE OAK SICK
4019	8 "	LIVE OAK
4020	8 "	LIVE OAK
4021	8 "	LIVE OAK
4022	16 "	LIVE OAK
4028	18 "	LIVE OAK
4039	25 "	LIVE OAK 3-BOLE
4040	8 "	LIVE OAK
4041	14 "	LIVE OAK 2-BOLE
4043	81 "	LIVE OAK 7-BOLE
4044	18 "	LIVE OAK TWIN
4045	9 "	LIVE OAK
4046	12 "	LIVE OAK
4048	24 "	LIVE OAK TWIN
4050	10 "	LIVE OAK
4051	13 "	LIVE OAK
4052	23 "	LIVE OAK TWIN
4053	10 "	LIVE OAK
4054	12 "	LIVE OAK
4058	13 "	LIVE OAK
4059	10 "	CEDAR
4060	12 "	LIVE OAK
4061	17 "	LIVE OAK
4062	14 "	LIVE OAK
4063	18 "	LIVE OAK
4064	12 "	LIVE OAK
4065	27 "	LIVE OAK TWIN
4066	10 "	LIVE OAK
4067	15 "	LIVE OAK
4068	13 "	LIVE OAK

COORDINATE CONTROL

Point #	Northing	Easting
1	10078566.43	3019735.01
2	10078455.54	3019752.46
3	10078443.15	3019755.69
4	10078491.50	3019833.73
5	10078519.35	3019881.49
6	10078581.49	3019746.16
7	10078752.64	3019872.70
8	10078720.59	3019872.70
9	10078712.69	3019874.04
10	10078712.56	3019893.24
11	10078720.59	3019897.70
12	10078752.64	3019897.70
13	10078782.55	3020319.98
14	10078733.58	3020341.00
15	10078732.52	3020364.49
16	10078830.23	3020372.24

LEGEND

- 1/2" IRON ROD FOUND W/ PLASTIC CAP (RAMSEY)
- ELEC — ELECTRIC
- EPB — ELECTRIC PULL BOX
- CMP — CORRUGATED METAL PIPE
- ROW — RIGHT-OF-WAY
- SO — STUBOUT
- T/PED — TELEPHONE PEDESTAL
- LP — LIGHT POLE
- ICV — SPRINKLER CONTROL VALVE
- WM — WATER METER
- WV — WATER VALVE
- WROUGHT IRON FENCE
- 4017 — TREES TO REMAIN
- DIRECTION OF FLOW
- PROPOSED CONTOUR
- PROPERTY BOUNDARY
- EXISTING CULVERT

THE LOCATION OF EXISTING UNDERGROUND AND OVERHEAD UTILITIES ARE SHOWN IN AN APPROXIMATE WAY ONLY. THE CONTRACTOR SHALL DETERMINE THE EXACT LOCATION OF ALL EXISTING UTILITIES BEFORE COMMENCING WORK. HE AGREES TO BE FULLY RESPONSIBLE FOR ANY AND ALL DAMAGE WHICH MIGHT BE OCCASIONED BY HIS FAILURE TO EXACTLY LOCATE AND PRESERVE ANY AND ALL UNDERGROUND AND OVERHEAD UTILITIES.

NO.	REVISION DESCRIPTION	REVIEWED BY	DATE

Belverdere Amenity Center

CALCULATION OF IMPERVIOUS COVER

AREA	ACRES	AREAS (AC)	IMPERVIOUS COVER
EXISTING	2.78	0.32	11.50%
PROPOSED	2.78	0.34	12.23%

*DOES NOT INCLUDE THE 0.12 AC PROPOSED PARKING LOT OR THE 0.16 EXISTING PARKING LOT. PARKING IS PROPOSED TO BE PERVIOUS CONCRETE AND WILL NOT BEHAVE DIFFERENTLY THAN EXISTING PERVIOUS COVER.

Bryce Canady

STATE OF TEXAS
BRYCE D. CANADY
123424
LICENSED
PROFESSIONAL ENGINEER

5-10-18

Murfee Engineering Company | Texas Registered Engineering Firm F-353

BELVEDERE M.U.D.

AMENITY CENTER IMPROVEMENTS

SITE PLAN

1101 Capital of Texas Highway South, Building D, Suite 110, Austin, Texas 78746, (512) 327-6204

JOB NO. 17-031-20	SCALE: AS NOTED	SHEET:	07 OF 11
DESIGNED BY: BC		DATE:	5/10/2018
DRAWN BY: MLH		DATE:	5/10/2018

FILE(LAYOUT): O:\17031\20\SITE PLAN.dwg(SITE PLAN)

USFWS BUFFER

PROP. DRAINAGE SWALE

25'x32' PROP. BUILDING

FF. 1132'

PROP. PERVIOUS SIDEWALK

DRAINAGE SWALE TO DRAIN AT 1% TO DAYLIGHT AT EXISTING CULVERT (REFER DETAIL THIS SHEET)

AMENITY LOT BLOCK D 1 2.771 AC.

PROP. STAGING AREA

PROP. DECOMPOSED GRANITE PARKING W/CURB

LAKEWOOD RIDGE COVE

FLAGLER DR.

ROLLINS D

PROP. PARKING LOT

PROP. 36" CMP CULVERT

SWIMMING POOL EXISTING COPING EL= 1129.0

COMMUNITY CENTER EXISTING F.F. EL= 1126.0

EXISTING PARKING

EXISTING PLAYSCAPE

EXISTING SPORT COURT

EXISTING MAIL KIOSK

SEPTIC DRAIN LINES

SEPTIC DRAIN LINE

ROCK WALL

STONE CULVERT

SEPTIC TANK

ELEC OUTLET

PROPANE TANK

JOGGING PATH

STOCK POND

BENCH

PET POOP BAGS

TIRED

EPB

WM

ICV

0 20' 40'

NOTES:

1. IF DISTURBED AREA IS NOT TO BE WORKED ON FOR MORE THAN 14 DAYS, DISTURBED AREA NEEDS TO BE STABILIZED BY REVEGETATION, MULCH, TARP OR REVEGETATION MATTING. (ECM 1.4.4.B.3, SECTION 5, I.)

2. ENVIRONMENTAL INSPECTION HAS THE AUTHORITY TO ADD AND/OR MODIFY EROSION/SEDIMENTATION CONTROLS ON SITE TO KEEP PROJECT IN-COMPLIANCE WITH THE CITY OF AUSTIN RULES AND REGULATIONS.

3. CONTRACTOR SHALL UTILIZE DUST CONTROL MEASURES DURING SITE CONSTRUCTION SUCH AS IRRIGATION TRUCKS AND MULCHING AS PER ECM 1.4.5(A), OR AS DIRECTED BY THE ENVIRONMENTAL INSPECTOR.

4. THE CONTRACTOR WILL CLEAN UP SOILS THAT MIGRATE ONTO THE ROADS A MINIMUM OF ONCE DAILY. (ECM 1.4.4.D.4).

5. CONTRACTOR SHALL SUBMIT A DEWATERING PLAN WHICH MAY BE A TEMPORARY DIVERSION CHANNEL, DIVERSION PIPE, PUMPS, BAFFLE DAM, OR OTHER APPROVED METHOD. CONTRACTOR WILL OBTAIN DEWATERING PLAN APPROVAL PRIOR TO CONSTRUCTION. SANDBAGS, EARTHEN DIKES, OR OTHER ERODIBLE MATERIALS ARE NOT ACCEPTABLE. CONTRACTOR SHALL MAINTAIN THE DEWATERING SYSTEM TO ENSURE PERFORMANCE. IF THE DEWATERING SYSTEM IS NOT PERFORMING, THE CONTRACTOR MUST FOLLOW THE ENVIRONMENTAL INSPECTOR'S DIRECTION TO ENSURE ADEQUATE SYSTEM PERFORMANCE.

6. THE MAXIMUM PORTION OF ANY COMMERCIAL, MULTI-FAMILY OR SINGLE FAMILY/DUPLEX LOT THAT MAY BE ESTABLISHED AS TURF OR LANDSCAPED IS 15 PERCENT. HOWEVER, NO LOT SHALL BE RESTRICTED TO LESS THAN 2000 SQUARE FEET OF TURF OR LANDSCAPED AREA. UNDISTURBED NATURAL AREAS OR AREAS RESTORED TO NATURAL CONDITIONS SHALL NOT BE CONSIDERED LANDSCAPING OR TURF.

7. FOR UTILITY CONSTRUCTION, ALL SPOILS ARE TO BE PLACED BACK IN TRENCH EVERY NIGHT; OR IF SPOILS PILES ARE TO REMAIN OVERNIGHT, SPOILS MUST BE PLACED ON THE UPHILL SIDE OF TRENCH WITHIN THE LOC.

8. CONTRACTOR SHALL INSTALL CURLEX MATTING IN DRAINAGE CHANNEL.

9. CONTRACTOR TO GRADE FROM 4" BELOW CURB, BACK TO EXISTING GROUND AT A SLOPE OF 3:1 FOR PARKING AREAS.

LEGEND

- PROPERTY BOUNDARY
- PROPOSED CONTOUR
- TREES TO REMAIN
- STABILIZED CONSTRUCTION ENTRANCE (SCE)
- STAGING/TEMP SPOILS
- LOC — LIMITS OF CONSTRUCTION
- TP — TREE PROTECTION
- SF — SILT FENCE
- DIRECTION OF FLOW
- EXISTING CULVERT

THE LOCATION OF EXISTING UNDERGROUND AND OVERHEAD UTILITIES ARE SHOWN IN AN APPROXIMATE WAY ONLY. THE CONTRACTOR SHALL DETERMINE THE EXACT LOCATION OF ALL EXISTING UTILITIES BEFORE COMMENCING WORK. HE AGREES TO BE FULLY RESPONSIBLE FOR ANY AND ALL DAMAGE WHICH MIGHT BE OCCASIONED BY HIS FAILURE TO EXACTLY LOCATE AND PRESERVE ANY AND ALL UNDERGROUND AND OVERHEAD UTILITIES.

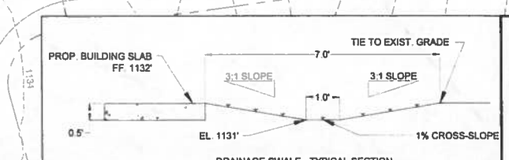

DRAINAGE SWALE - TYPICAL SECTION

Bryce Canady
STATE OF TEXAS
BRYCE D. CANADY
123424
LICENSED PROFESSIONAL ENGINEER
5-10-18

MEC
Murfee Engineering Company
Texas Registered Engineering Firm F-353

NO.	REVISION DESCRIPTION	REVIEWED BY	DATE

BELVEDERE M.U.D.

AMENITY CENTER IMPROVEMENTS

EROSION SEDIMENTATION CONTROL PLAN & TREE PROTECTION

1101 Capital of Texas Highway South, Building D, Suite 110, Austin, Texas 78746, (512) 327-6204

JOB NO. 17-031-20	SCALE: AS NOTED	SHEET:	08 OF 11
DESIGNED BY: BC		DATE:	5/10/2018
DRAWN BY: MLH		DATE:	5/10/2018

FILE(LAYOUT): O:\17\031\20\ESC.dwg(ESC)

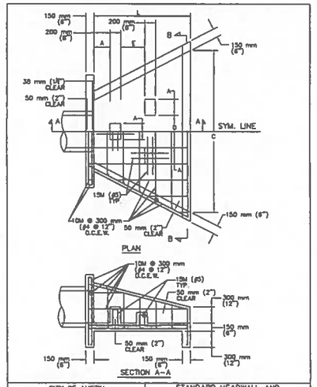

CITY OF AUSTIN — DEPARTMENT OF WATERSHED PROTECTION AND DEVELOPMENT REVIEW
STANDARD HEADWALL AND ENERGY DISSIPATORS
RECORD COPY SIGNED BY BILL GARDNER — 08/20/07 — ADOPTED
THE ARCHITECT/ENGINEER ASSUMES RESPONSIBILITY FOR APPROPRIATE USE OF THIS STANDARD.
STANDARD NO. 508S–13 — 1 OF 2

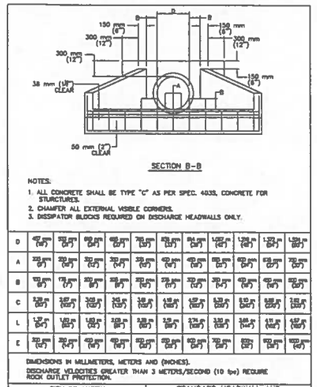

NOTES:
1. ALL CONCRETE SHALL BE TYPE "C" AS PER SPEC. 403S, CONCRETE FOR STRUCTURES.
2. CHAMFER ALL EXTERNAL VISIBLE CORNERS.
3. DISSIPATOR BLOCKS REQUIRED ON DISCHARGE HEADWALLS ONLY.

D	457 mm (18")	533 mm (21")	609 mm (24")	686 mm (27")	762 mm (30")	838 mm (33")	914 mm (36")	1.052 m (42")	1.219 m (48")	1.524 m (60")
A	305 mm (12")	305 mm (12")	305 mm (12")	305 mm (12")	305 mm (12")	420 mm (16")	420 mm (16")	420 mm (16")	420 mm (16")	420 mm (16")
B	152 mm (6")	178 mm (7")	203 mm (8")	229 mm (9")	254 mm (10")	279 mm (11")	305 mm (12")	381 mm (15")	457 mm (18")	610 mm (24")
C	0.28 m (0.9')	0.37 m (1.2')	0.43 m (1.4')	0.49 m (1.6')	0.56 m (1.8')	0.62 m (2.0')	0.68 m (2.2')	0.81 m (2.7')	0.88 m (2.9')	1.00 m (3.3')
L	1.37 m (5.4')	1.83 m (6.0')	1.83 m (6.0')	2.13 m (7.0')	2.13 m (7.0')	3.05 m (10.0')	3.74 m (12.3')	3.81 m (12.5')	3.81 m (12.5')	4.57 m (15.0')
E	0.23 m (0.8')	0.30 m (1.0')	0.30 m (1.0')	0.30 m (1.0')	0.30 m (1.0')	0.30 m (1.0')	0.30 m (1.0')	0.30 m (1.0')	0.30 m (1.0')	0.30 m (1.0')

DIMENSIONS IN MILLIMETERS, METERS AND (INCHES).
DISCHARGE VELOCITIES GREATER THAN 3 METERS/SECOND (10 fps) REQUIRE ROCK OUTLET PROTECTION.

CITY OF AUSTIN — DEPARTMENT OF WATERSHED PROTECTION AND DEVELOPMENT REVIEW
STANDARD HEADWALL AND ENERGY DISSIPATORS
RECORD COPY SIGNED BY BILL GARDNER — 08/20/07 — ADOPTED
THE ARCHITECT/ENGINEER ASSUMES RESPONSIBILITY FOR APPROPRIATE USE OF THIS STANDARD.
STANDARD NO. 508S–13 — 2 OF 2

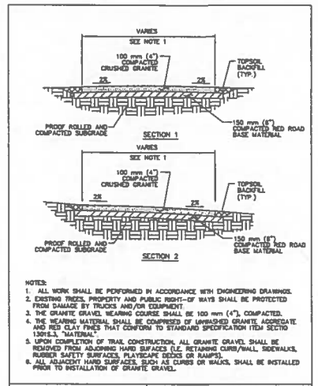

NOTES:
1. ALL WORK SHALL BE PERFORMED IN ACCORDANCE WITH ENGINEERING DRAWINGS.
2. EXISTING TREES, PROPERTY AND PUBLIC RIGHT-OF WAYS SHALL BE PROTECTED FROM DAMAGE BY TRUCKS AND/OR EQUIPMENT.
3. THE GRANITE GRAVEL WEARING COURSE SHALL BE 100 mm (4"), COMPACTED.
4. THE WEARING MATERIAL SHALL BE COMPRISED OF UNWASHED GRANITE AGGREGATE AND RED CLAY FINES THAT CONFORM TO STANDARD SPECIFICATION ITEM SECTION 1301S.3, "MATERIAL".
5. UPON COMPLETION OF TRAIL CONSTRUCTION, ALL GRANITE GRAVEL SHALL BE REMOVED FROM ADJOINING HARD SURFACES (I.E. RETAINING CURB/WALL, SIDEWALKS, RUBBER SAFETY SURFACES, PLAYSCAPE DECKS OR RAMPS).
6. ALL ADJACENT HARD SURFACES, SUCH AS CURBS OR WALKS, SHALL BE INSTALLED PRIOR TO INSTALLATION OF GRANITE GRAVEL.

GRANITE PARKING DETAIL
THE ARCHITECT/ENGINEER ASSUMES RESPONSIBILITY FOR APPROPRIATE USE OF THIS STANDARD — STANDARD NO. 1 — 1 OF 3

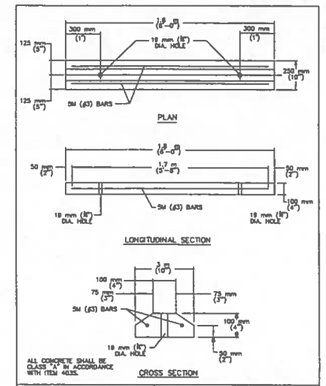

CITY OF AUSTIN — DEPARTMENT OF PUBLIC WORKS
PARKING LOT BUMPER CURB
RECORD COPY SIGNED BY BILL GARDNER — 3/13/95 — APPROVED — ADOPTED
THE ARCHITECT/ENGINEER ASSUMES RESPONSIBILITY FOR APPROPRIATE USE OF THIS STANDARD.
STANDARD NO. 439S–1

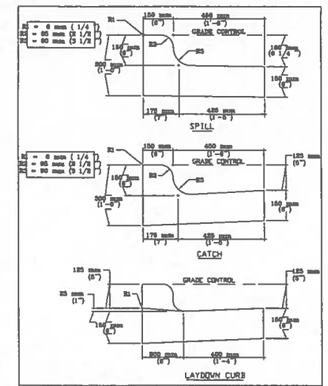

CITY OF AUSTIN — DEPARTMENT OF PUBLIC WORKS AND TRANSPORTATION
CURB AND GUTTER SECTION
RECORD COPY SIGNED BY LEON BUTZER — 8/28/98 — ADOPTED
THE ARCHITECT/ENGINEER ASSUMES RESPONSIBILITY FOR APPROPRIATE USE OF THIS STANDARD.
STANDARD NO. 430S–1

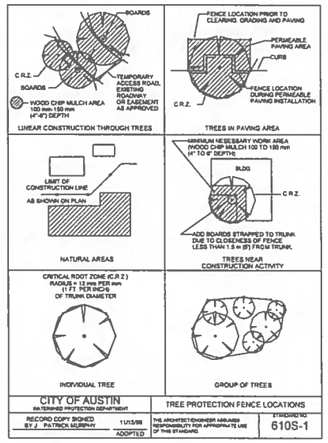

CITY OF AUSTIN — WATERSHED PROTECTION DEPARTMENT
TREE PROTECTION FENCE LOCATIONS
RECORD COPY SIGNED BY J. PATRICK MURPHY — 11/13/98 — ADOPTED
THE ARCHITECT/ENGINEER ASSUMES RESPONSIBILITY FOR APPROPRIATE USE OF THIS STANDARD
STANDARD NO. 610S–1

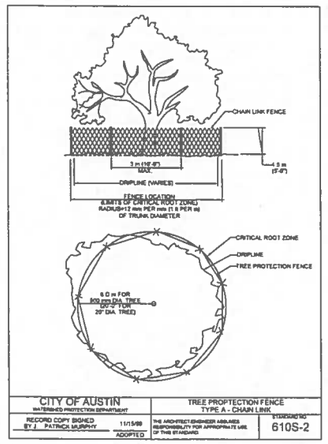

CITY OF AUSTIN — WATERSHED PROTECTION DEPARTMENT
TREE PROTECTION FENCE TYPE A - CHAIN LINK
RECORD COPY SIGNED BY J. PATRICK MURPHY — 11/13/98 — ADOPTED
THE ARCHITECT/ENGINEER ASSUMES RESPONSIBILITY FOR APPROPRIATE USE OF THIS STANDARD
STANDARD NO. 610S–2

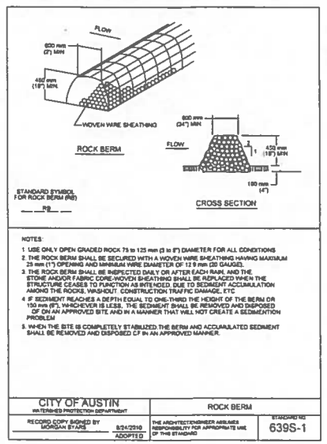

NOTES:
1. USE ONLY OPEN GRADED ROCK 75 to 125 mm (3 to 5") DIAMETER FOR ALL CONDITIONS.
2. THE ROCK BERM SHALL BE SECURED WITH A WOVEN WIRE SHEATHING HAVING MAXIMUM 25 mm (1") OPENING AND MINIMUM WIRE DIAMETER OF 12.8 mm (20 GAUGE).
3. THE ROCK BERM SHALL BE INSPECTED DAILY OR AFTER EACH RAIN, AND THE STONE AND/OR FABRIC CORE-WOVEN SHEATHING SHALL BE REPLACED WHEN THE STRUCTURE CEASES TO FUNCTION AS INTENDED, DUE TO SEDIMENT ACCUMULATION AMONG THE ROCKS, WASHOUT, CONSTRUCTION TRAFFIC DAMAGE, ETC.
4. IF SEDIMENT REACHES A DEPTH EQUAL TO ONE-THIRD THE HEIGHT OF THE BERM OR 150 mm (6"), WHICHEVER IS LESS, THE SEDIMENT SHALL BE REMOVED AND DISPOSED OF ON AN APPROVED SITE, AND IN A MANNER THAT WILL NOT CREATE A SEDIMENTATION PROBLEM.
5. WHEN THE SITE IS COMPLETELY STABILIZED THE BERM AND ACCUMULATED SEDIMENT SHALL BE REMOVED AND DISPOSED OF IN AN APPROVED MANNER.

CITY OF AUSTIN — WATERSHED PROTECTION DEPARTMENT
ROCK BERM
RECORD COPY SIGNED BY MORGAN STARS — 8/24/2010 — ADOPTED
THE ARCHITECT/ENGINEER ASSUMES RESPONSIBILITY FOR APPROPRIATE USE OF THIS STANDARD
STANDARD NO. 639S–1

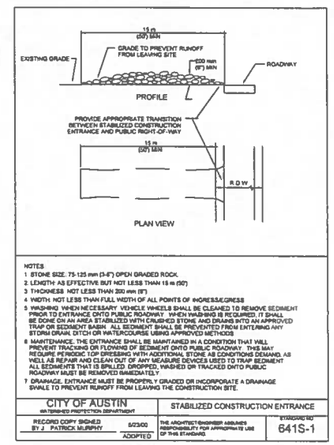

NOTES:
1. STONE SIZE: 75-125 mm (3-5") OPEN GRADED ROCK.
2. LENGTH AS EFFECTIVE BUT NOT LESS THAN 15 m (50')
3. THICKNESS NOT LESS THAN 200 mm (8")
4. WIDTH: NOT LESS THAN FULL WIDTH OF ALL POINTS OF INGRESS/EGRESS
5. WASHING WHEN NECESSARY VEHICLE WHEELS SHALL BE CLEANED TO REMOVE SEDIMENT PRIOR TO ENTRANCE ONTO PUBLIC ROADWAY. WHEN WASHING IS REQUIRED, IT SHALL BE DONE ON AN AREA STABILIZED WITH CRUSHED STONE AND DRAINS INTO AN APPROVED TRAP OR SEDIMENT BASIN. ALL SEDIMENT SHALL BE PREVENTED FROM ENTERING ANY STORM DRAIN DITCH OR WATERCOURSE USING APPROVED METHODS.
6. MAINTENANCE: THE ENTRANCE SHALL BE MAINTAINED IN A CONDITION THAT WILL PREVENT TRACKING OR FLOWING OF SEDIMENT ONTO PUBLIC ROADWAY. THIS MAY REQUIRE PERIODIC TOP DRESSING WITH ADDITIONAL STONE AS CONDITIONS DEMAND, AS WELL AS REPAIR AND CLEAN OUT OF ANY MEASURE DEVICES USED TO TRAP SEDIMENT. ALL SEDIMENTS THAT IS SPILLED, DROPPED, WASHED OR TRACKED ONTO PUBLIC ROADWAY MUST BE REMOVED IMMEDIATELY.
7. DRAINAGE: ENTRANCE MUST BE PROPERLY GRADED OR INCORPORATE A DRAINAGE SWALE TO PREVENT RUNOFF FROM LEAVING THE CONSTRUCTION SITE.

CITY OF AUSTIN — WATERSHED PROTECTION DEPARTMENT
STABILIZED CONSTRUCTION ENTRANCE
RECORD COPY SIGNED BY J. PATRICK MURPHY — 6/23/00 — ADOPTED
THE ARCHITECT/ENGINEER ASSUMES RESPONSIBILITY FOR APPROPRIATE USE OF THIS STANDARD
STANDARD NO. 641S–1

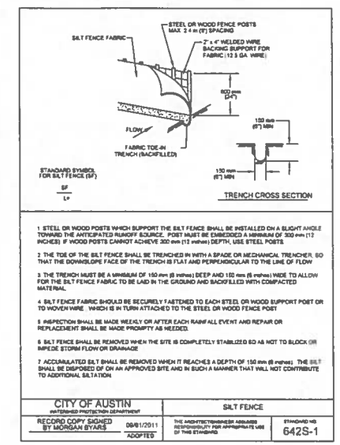

1. STEEL OR WOOD POSTS WHICH SUPPORT THE SILT FENCE SHALL BE INSTALLED ON A SLIGHT ANGLE TOWARD THE ANTICIPATED RUNOFF SOURCE. POST MUST BE EMBEDDED A MINIMUM OF 300 mm (12 INCHES) IF WOOD POSTS CANNOT ACHIEVE 300 mm (12 inches) DEPTH, USE STEEL POSTS.
2. THE TOE OF THE SILT FENCE SHALL BE TRENCHED IN WITH A SPADE OR MECHANICAL TRENCHER, SO THAT THE DOWNSLOPE FACE OF THE TRENCH IS FLAT AND PERPENDICULAR TO THE LINE OF FLOW.
3. THE TRENCH MUST BE A MINIMUM OF 150 mm (6 inches) DEEP AND 150 mm (6 inches) WIDE TO ALLOW FOR THE SILT FENCE FABRIC TO BE LAID IN THE GROUND AND BACKFILLED WITH COMPACTED MATERIAL.
4. SILT FENCE FABRIC SHOULD BE SECURELY FASTENED TO EACH STEEL OR WOOD SUPPORT POST OR TO WOVEN WIRE, WHICH IS IN TURN ATTACHED TO THE STEEL OR WOOD FENCE POST.
5. INSPECTION SHALL BE MADE WEEKLY OR AFTER EACH RAIN* ALL EVENT AND REPAIR OR REPLACEMENT SHALL BE MADE PROMPTLY AS NEEDED.
6. SILT FENCE SHALL BE REMOVED WHEN THE SITE IS COMPLETELY STABILIZED SO AS NOT TO BLOCK OR IMPEDE STORM FLOW OR DRAINAGE.
7. ACCUMULATED SILT SHALL BE REMOVED WHEN IT REACHES A DEPTH OF 150 mm (6 inches). THE SILT SHALL BE DISPOSED OF ON AN APPROVED SITE AND IN SUCH A MANNER THAT WILL NOT CONTRIBUTE TO ADDITIONAL SILTATION.

CITY OF AUSTIN — WATERSHED PROTECTION DEPARTMENT
SILT FENCE
RECORD COPY SIGNED BY MORGAN STARS — 08/01/2011 — ADOPTED
THE ARCHITECT/ENGINEER ASSUMES RESPONSIBILITY FOR APPROPRIATE USE OF THIS STANDARD
STANDARD NO. 642S–1

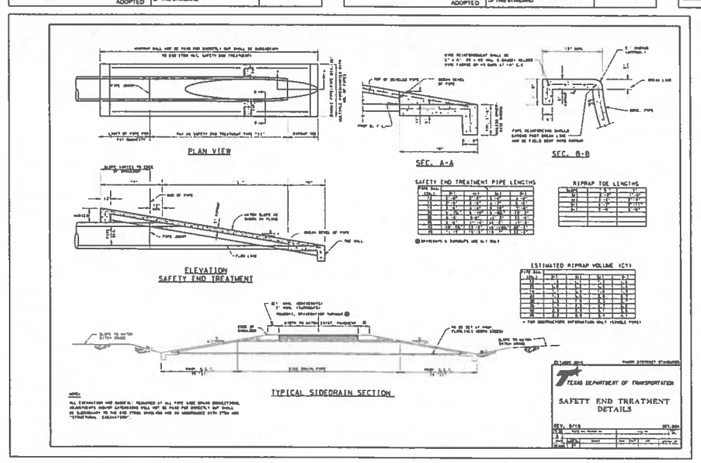

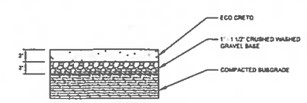

PERVIOUS SIDEWALK SECTION
NOT TO SCALE

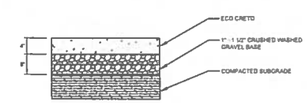

PERVIOUS PAVEMENT TYPICAL SECTION
NOT TO SCALE

NO.	REVISION DESCRIPTION	REVIEWED BY	DATE

Murfee Engineering Company — Texas Registered Engineering Firm F-353

STATE OF TEXAS — BRYCE D. CANADY — 123424 — LICENSED PROFESSIONAL ENGINEER
5-10-18

BELVEDERE M.U.D.
AMENITY CENTER IMPROVEMENTS
DETAIL SHEET

1101 Capital of Texas Highway South, Building D, Suite 110, Austin, Texas 78746, (512) 327-6204

JOB NO. 17-031-20	SCALE: AS NOTED	SHEET:	09 OF 11
DESIGNED BY: BC		DATE:	5/9/2018
DRAWN BY: MLH		DATE:	5/9/2018

FILE/(LAYOUT): O:\17031\20\TITLE-NOTES-DETAILS.dwg(DETAIL SHEET)

EXHIBIT E

Murfee Engineering Company

April 25th, 2018

VIA CERTIFIED MAIL

Districts Review Team (MC-152)
Utilities and Districts Section
Water Supply Division
Texas Commission on Environmental Quality
12100 Park 35 Circle
Building F – 3rd Floor
Austin, Texas 78753

RE: Belvedere MUD; Request for Approval of the Use of Surplus Funds; $92,247
CN602863920; RN104670229

Dear Districts Review Team:

Delivered herewith are a request letter and associated documents supporting the District's request for approval of the use of $92,247 of surplus funds for maintaining existing District-owned drainage facilities. The Belvedere MUD Board is a resident Board and all developer projects have been completed. There are no additional developer projects proposed in the future. The Board's Resolution Authorizing the Application and a filing fee in the amount of $100 are also enclosed.

The District appreciates your review of this surplus funds approval request. If you have any questions or need additional information, please contact me at your convenience at the number listed below or via e-mail at bcanady@murfee.com.

Sincerely,

Bryce Canady, P.E.
District Engineer

Attachments: Request Letter
Board Resolution Requesting Approval for the Use of Surplus Funds
Bookeeper's Statement on Surplus Funds Availability
Supporting Documentation from District's Auditor
$100 Filing Fee

cc: Peter Golde – Belvedere MUD
Stefanie Albright – Lloyd Gosselink
Garry Kimball – Specialized Public Finance Inc.
MEC File No. 17031.40

Belvedere MUD is requesting TCEQ approval for the use of $92,247 of surplus funds for the purpose of maintaining District drainage facilities. A Board resolution requesting approval for the use of surplus funds is attached. Documentation provided by the District's Auditor, West Davis and Co. show that the surplus funds have been generated from differences in the projected and final interest rates for the previous TCEQ- approved bond applications as listed below:

Series 2010 & 2011 Bonds Surplus Amount:		$74,719.78
Series 2016 Bond Surplus Amount:		$17,157.14
Interest Accrued on Surplus Funds as of 3/26/18:		$370.08
	Total:	$92,247.00

A breakdown of the specific projects which have generated surplus funds by bond application are as follows:

Bond Application No. 1 (Series 2010 - $2,350,000):
Projects: Phase I Water & Drainage Facilities
Projected Interest Rate: 7.5%
Final Interest Rate: 5.569131%
Original Surplus Amount: $78,021

Bond Application No. 2 (Series 2011 - $1,920,000):
Projects: Phase II Water & Drainage Facilities
Phase IIA Water & Drainage Facilities
Phase III Water & Drainage Facilities
Projected Interest Rate: 6.5%
Final Interest Rate: 4.99835%
Original Surplus Amount: $32,083

Bond Application No. 3 (Series 2016 - $1,000,000):
Projects: Phase VI Water & Drainage Facilities
Phase VII-B Water & Drainage Facilities
Impact Fees
Projected Interest Rate: 5%
Final Interest Rate: 3.040425%
Original Surplus Amount: $20,918

Please note that the projects listed above are 100% complete and the Developer has been fully reimbursed for the construction of drainage, water, erosion controls as shown in Bond Applications 1, 2, and 3. Attached is a statement from the District's bookkeeper (Montoya & Montzingo) on the availability of surplus funds for the District.

MONTOYA & MONZINGO, LLP
CERTIFIED PUBLIC ACCOUNTANTS

P.O. BOX
2029 203 RAILROAD AVE. N.
PFLUGERVILLE, TX 78691-2029
PH (512) 251-5668 FAX (512) 990-5391

May 1, 2018

To Whom It May Concern

Re: Belvedere Municipal Utility District

Belvedere Municipal Utility District has $92,247 available in its capital projects fund which is surplus from its Series 2010, Series 2011 and Series 2016 bond issues. This surplus amount is due to costs of the bond issues being less than expected. These funds are not committed to other projects and are considered surplus.

Sincerely,

Jeff Monzingo, CPA
Bookkeeper for the District

BELVEDERE MUNICIPAL UTILITY DISTRICT
RESOLUTION REQUESTING APPROVAL AND AUTHORIZING APPLICATION TO THE TEXAS COMMISSION ON ENVIRONMENTAL QUALITY
FOR THE USE OF SURPLUS BOND FUNDS

WHEREAS, Belvedere Municipal Utility District (the "District") has been duly and lawfully created by an Order of the Texas Commission on Environmental Quality, and operates pursuant to the terms and provisions of Article XVI, Section 59 of the Texas Constitution, and Chapters 49 and 54 of the Texas Water Code; and

WHEREAS, the Texas Commission on Environmental Quality ("Commission") approved the Series 2010, Series 2011, and Series 2016 unlimited tax and revenue bonds (the "Bonds") by the District for the purpose or purposes of purchasing, constructing, or otherwise acquiring, a waterworks system and a drainage and storm water system for said District, and additions, extensions and improvements thereto, and purchasing or otherwise acquiring any and all property, contract rights, rights of use, and interests in property necessary, appropriate or incident to the purchase, construction, or other acquisition of such waterworks system, and drainage and storm sewer system, and additions, extensions and improvements thereto, and for the additional purpose of paying all expenses in any manner incidental thereto and such expenses as are incidental to the creation, organization, administration and financing of the District; and

WHEREAS, the Board of Directors of the District desires to request authority from the Commission to use surplus funds derived from the sale of the Bonds in the approximate amount of $92,247.00, including interest currently held within the District's Capital Projects Account ("Capital Projects Account") for future drainage improvements throughout the District; and

WHEREAS, the Board of Directors of the District finds that the District has surplus funds available and that these surplus funds should be used for future drainage improvements throughout the District.

NOW, THEREFORE, BE IT RESOLVED BY THE BOARD OF DIRECTORS OF BELVEDERE MUNICIPAL UTILITY DISTRICT AS FOLLOWS:

Section 1. The recitals stated above are true and correct.

Section 2. The Board of Directors of the District requests the Commission's approval of the use of surplus funds derived from the sale of the Bonds currently held in the District's Capital Projects Account, be applied toward future drainage improvements throughout the District.

Section 3. The President and the Secretary of the Board of Directors of the District, and the District's consultants, are hereby authorized and directed to do any and all things necessary and proper in connection with this application to the Commission.

Section 4. A certified copy of this Resolution shall constitute an application on behalf of the District for the approvals set forth above.

PASSED AND APPROVED the 15th day of May, 2018.

_____
Peter Golde, President
Board of Directors

ATTEST:

_____
Ronald Ubertini, Secretary
Board of Directors

(SEAL)

BELVEDERE MUNICIPAL UTILITY DISTRICT

REPORT ON APPLYING AGREED-UPON PROCEDURES TO CONSTRUCTION, ENGINEERING AND RELATED COSTS REIMBURSABLE TO THE DEVELOPER

FEBRUARY 16, 2010

Sutton Frost Cary LLP
A Limited Liability Partnership
Certified Public Accountants and Consultants

INDEPENDENT ACCOUNTANT'S REPORT ON APPLYING AGREED UPON PROCEDURES

Board of Directors
BELVEDERE MUNICIPAL UTILITY DISTRICT

We have performed the procedures enumerated below, which were agreed to by Belvedere Municipal Utility District ("District") on the invoices and schedules submitted by Hamilton Bee Cave, LP ("Developer") for payment from the District's Series 2010 bond proceeds. These procedures were performed solely to assist you in evaluating the reasonableness of those costs. Pursuant to 30 TAC Chapter 293.70 of the Texas Commission on Environmental Quality ("Commission"), the Board of Directors of the District is responsible for engaging a certified public accountant or public accountant holding a permit from the Texas State Board of Public Accountancy to perform certain agreed-upon procedures applicable to all items and amounts for which reimbursement request has been received, and issue a report before a developer is reimbursed for expenditures incurred on the District's behalf.

This agreed-upon procedures engagement was conducted in accordance with attestation standards established by the American Institute of Certified Public Accountants. The sufficiency of the procedures is solely the responsibility of the Board of Directors of the District. Consequently, we make no representation regarding the sufficiency of the procedures either for the purpose of which this report has been requested or for any other purpose. The procedures we performed are summarized below:

1. We reviewed the Commission's Technical Memorandum dated November 6, 2009, Order Approving an Engineering Project and the Issuance of $2,350,000 in Unlimited Tax Bonds dated November 17, 2009, and rules of the Commission relative to the reimbursement request. Our review was for the purpose of identifying those items authorized for District participation and those items specifically prohibited from purchasing. In some cases our efforts required review of portions of the bond application relative to the bond issue.

2. We reviewed for completeness Developer schedules, supporting invoices and construction pay estimates in substantiation of the costs to be reimbursed. Our review included all documentation supporting items and amounts for which reimbursement was requested.

3. For all payments we compared dates to copies of checks.

4. We reviewed the formulas for computation of developer interest to be reimbursed to the Developer based upon the net effective interest rate of the District's Series 2010 bond issue and limited interest in accordance with the orders and rules of the Commission.

600 Six Flags Drive, Suite 600 • Arlington, Texas 76011
(817) 649-8083 • Metro (817) 640-7609 • Fax (817) 649-3202
www.sfcllp.com • E-Mail: admin@sfcllp.com

5. We provided a draft of our report to the Board of Directors, District's Attorney, Engineer, Financial Advisor, Bookkeeper and Developer prior to reimbursing the Developer.

6. We prepared for submittal to the Commission our report detailing the costs payable to the Developer and a schedule reflecting the results of the payment and projected additional costs to complete as compared with the amount approved by the Commission.

The attached Schedule A titled "Schedule of Amounts to be Paid to the Developer from Series 2010 Bond Proceeds", sets forth the Developer's reimbursable costs. This reimbursement is in accordance with the terms of the Agreement for the Construction of Utility Facilities and Reimbursement for Eligible Costs between the Developer and the District dated July 18, 2006.

We prepared the reimbursement schedule from schedules provided by the Developer and amended the schedule. We have revised the reimbursable amount to $1,663,725, which includes interest in the amount of $156,285, calculated at 5.569131%, the net effective interest rate of the District's Series 2010 bond issue. Interest on items reimbursable from the bond proceeds was limited to two years in accordance with the rules of the Commission.

The attached Schedule B is a comparison of the actual reimbursable costs with the estimated costs. Due to the net effective interest rate on the bonds (5.569131%) being less than estimated in the bond application (7.5%), the Developer's interest reimbursement was reduced by $78,021.

We were not engaged to and did not conduct an audit, the objective of which would be the expression of an opinion of the aforementioned reimbursable costs. Accordingly, we do not express such an opinion. Had we performed additional procedures, other matters might have come to our attention that would have been reported to you.

This report is intended solely for the information and use of the Board of Directors and is not intended to be and should not be used by anyone other than this specified party. However, this report is a matter of public record and its distribution is not limited. This report should not be associated with the presentation of any financial data of the District except to comply with filing requirements as specified by the Commission.

Sutton Frost Cary

A Limited Liability Partnership

February 16, 2010

BELVEDERE MUNICIPAL UTILITY DISTRICT
SCHEDULE A-AMOUNTS TO BE PAID TO THE DEVELOPER FROM SERIES 2010 BOND PROCEEDS
FEBRUARY 16, 2010

	Hamilton Bee Cave, LP		
Description	% Complete (Date Complete)	Reimburseable Cost	Interest at 5.569131%
J.C. Evans Construction Co. LP			
Belvedere Phase 1 - W&D	100%	$ 2,284,019	
Less Disallowed Costs	(10/2006)	(941,912)	
Less LCRA Reimbursement		(138,624)	
		1,203,483	$ 134,047
LJA Engineering & Surveying, Inc.			
Engineering fees related to:			
Belvedere Phase 1 - W&D	100%	293,427	
Less Disallowed Costs	(10/2006)	(114,437)	
		178,990	19,936
Terra Eco Services, LLC			
Inspection for storm water quality related to:			
Belvedere Phase 1 - W&D	100%	13,115	
Less Disallowed Costs	(10/2006)	(5,115)	
		8,000	891
Terracon			
Construction material testing related to:			
Belvedere Phase 1 - W&D	100%	20,775	
Less Disallowed Costs	(10/2006)	(8,102)	
		12,673	1,411
Lloyd Gosselink Rochelle & Townsend, P.C.			
Legal fees for creation		29,255	-
Operating advances		75,040	-
Total Reimbursable Costs and Interest Due to Hamilton Bee Cave, LP		$ 1,507,441	$ 156,285
Total to Be Paid from Series 2010 Bond Issue Proceeds			$ 1,663,726

See accompanying disclaimer of opinion and explanation of agreed-upon procedures performed.

BELVEDERE MUNICIPAL UTILITY DISTRICT
SCHEDULE B-SCHEDULE COMPARING ACTUAL REIMBURSABLE COSTS WITH ENGINEERING ESTIMATES
FEBRUARY 16, 2010

Description	Costs Reimbursed to Developer	Costs Paid Directly by District	Total Costs	Projected Costs	Actual and Projected	Engineering Estimate Approved by the Commission 1	Difference Over or (Under)	% Variance Over or (Under)
Construction Costs								
Belvedere Phase I - W & D	$ 1,203,483	$ -	$ 1,203,483	$ -	$ 1,203,483	$ 1,203,483	$ -	0%
Engineering and Testing	199,663	-	199,663	-	199,663	199,663	-	0%
Total Construction Costs	1,403,146	-	1,403,146	-	1,403,146	1,403,146	-	
Nonconstruction Costs								
Legal Fees	-	57,750	57,750	-	57,750	57,750	-	0%
Fiscal Agent Fees	-	29,375	29,375	-	29,375	29,375	-	0%
Interest Cost:								
Capitalized Interest 1	-	261,749	261,749	-	261,749	261,749	-	0%
Developer Interest	156,285	-	156,285	-	156,285	234,306	(78,021)	-33%
Bond Discount	-	70,500	70,500	-	70,500	70,500	-	0%
Creation Costs	29,255	-	29,255	-	29,255	29,255	-	0%
Operating Expenses	75,040	-	75,040	-	75,040	75,040	-	0%
Bond Issuance Expenses	-	-	-	44,903	44,903	44,903	-	0%
Bond Application Report Costs	-	45,000	45,000	-	45,000	45,000	-	0%
Attorney General Fee	-	2,350	2,350	-	2,350	2,350	-	0%
TCEQ Bond Issuance Fee	-	5,875	5,875	-	5,875	5,875	-	0%
Contingency 1	-	-	-	168,772	168,772	90,751	78,021	100%
Total Nonconstruction Costs	260,580	472,599	733,179	213,675	946,854	946,854	-	
Total Bond Issue	$ 1,663,726	$ 472,599	$ 2,136,325	$ 213,675	$ 2,350,000	$ 2,350,000	$ -	

1 Amount approved by the Commission and adjusted in the Official Statement.

See accompanying disclaimer of opinion and explanation of agreed-upon procedures.

Report on the Application of Certain Agreed Procedures

relating to

Belvedere Municipal Utility District

$1,920,000 Series 2011 Bonds

WEST, DAVIS & COMPANY
A LIMITED LIABILITY PARTNERSHIP

Board of Directors
Belvedere Municipal Utility District
c/o Lloyd, Gosselink, Rochelle & Townsend, PC
816 Congress Av #1900
Austin, Texas 78701

At your request, we have performed the procedures described below with respect to the accompanying Comparison of Costs Schedule to the Interoffice Memorandum (Schedule B) as adopted by the Commission order approving the bond issue and the Recapitulation of Amounts to be Reimbursed to Developers (Schedule A). Our report was made for the purpose of providing you with information relating to the use of bond proceeds, and our report is not to be used for any other purpose. The procedures we performed are summarized as follows:

1. Information for the use of proceeds was obtained from the Texas Commission on Environmental Quality order approving the $1,920,000 Bond Issue, which included the interoffice staff memorandum.
2. Information for the costs to be reimbursed to the developers was obtained from the review of reimbursable costs as of October 18, 2011. Information for the actual costs paid directly by the district was obtained from a review of the district records as of October 18, 2011.
3. Projected additional costs to be funded from this bond issue were obtained from invoices and discussions with various parties who are to be reimbursed from this bond issue.

Because the above procedures do not constitute an examination made in accordance with generally accepted auditing standards, we do not express an opinion on the accompanying schedules. In connection with the procedures referred to above, no matters came to our attention that caused us to believe that amounts included in the schedule should be adjusted. If we had performed additional procedures or if we had made an examination of the financial statements in accordance with generally accepted auditing standards, other matters might have come to our attention that would have been reported to you. This report relates only to the attached Developer Reimbursement Report and Comparison of Costs Schedule and does no extend to any financial statements of Belvedere Municipal Utility District taken as a whole.

West, Davis & Company

October 18, 2011

11824 JOLLYVILLE RD, SUITE 100 • AUSTIN, TEXAS 78759-2322
TELEPHONE 512.922.8809 • FACSIMILE 512.340.0333

SCHEDULE A

Belvedere Municipal Utility District

CALCULATION OF AMOUNTS TO BE PAID TO DEVELOPER FROM SERIES 2011 BOND ISSUE PROCEEDS

In Accordance with agreements with Belvedere Municipal Utility District
Dated July 18, 2006

	Developer A - Hamilton Bee Cave, LP			
Description	% Complete (Date Complete)	Reimbursable Cost		Interest[1]
DISTRICT FACILITIES				
Joe Bland Construction, Inc.				
(Water & Drainage)	100%			
Phase 2	Mar-07	$ 1,710,198		
Less Ineligible Items		(965,518)	744,680	
Interest Accrued at 4.99835%				117,618
Joe Bland Construction, Inc.				
(Water & Drainage)	100%			
Phase 3	Mar-08	729,973		
Less Ineligible Items		(388,603)	341,370	
Interest Accrued at 4.99835%				62,529
LJA Engineering, Inc.	100%			
Terracon				
Terra Eco Services				
Engineering & Testing		397,624		
Less Ineligible Items		(221,249)	176,375	
Interest Accrued at 4.99835%				26,347
NON-CONSTRUCTION ITEMS				
District Share of Administration Costs	100%			
Various		75,040		
Less Amount Reimbursed With Previous Bond Funds		(75,040)	-	
Interest Accrued at 4.99835%				4,685
District Share of Creation Costs	100%			
Various		29,255		
Less Amount Reimbursed With Previous Bond Funds		(29,255)	-	
Interest Accrued at 4.99835%				1,826
TOTAL DUE DEVELOPER A			**1,262,425**	**213,005**
TOTAL TO BE PAID FROM SERIES 2011 BOND ISSUE PROCEEDS				**$ 1,475,430**

Note 1: Interest is based on an expected reimbursement date of October 18, 2011. In addition, the District was granted a waiver of the two limit on interest accrual, however interest has been reduced by $97,371 due to limits imposed 30 TAC Section 293.50(b)(2).

Note 2: The District applied for and was granted by the Texas Commission on Environmental Quality an exception to the 70% Developer Reimbursement allowance. Therefore, these are reimbursement at 100% of the Developer's Cost.

Schedule B

Belvedere Municipal Utility District

COMPARISON OF ACTUAL COSTS WITH COST SUMMARY AS APPROVED BY THE TEXAS COMMISSION ON ENVIRONMENTAL QUALITY

Cost Item	Costs Reimbursed to Developers (1)	Costs Paid Directly by District (2)	Total Paid Costs (1)+(2) (3)	Projected Costs (4)	Total Paid and Projected (3)+(4) (5)	Interoffice Memorandum Total (6)	Variance Over or (Under) (5)-(6) (7)	% Variance Over or (Under) (7)/(6)X100 (8)
Construction Costs								
District Items:								
Phase 2	744,680	-	744,680	-	744,680	744,680	-	0%
Phase 3	341,370	-	341,370	-	341,370	341,370	-	0%
Engineering	176,375		176,375		176,375	176,375	-	0%
TOTAL CONSTRUCTION COSTS	1,262,425	-	1,262,425	-	1,262,425	1,262,425	-	
Non-Construction Costs								
Legal Fees	-	51,300	51,300	-	51,300	51,300	-	0%
Financial Advisor Fees	-	24,000	24,000	-	24,000	24,000	-	0%
Capitalized Interest	-	191,937	191,937	-	191,937	249,600	(57,663)	-23%
Developer Interest	213,005	-	213,005	-	213,005	189,345	23,660	12%
Bond Underwriter's Discount	-	57,600	57,600	-	57,600	57,600	-	0%
Creation Expenses	-	-	-	-	-	-	-	0%
Operating Expenses	-	-	-	-	-	-	-	0%
Bond Issuance Costs[1]	-	25,194	25,194	18,236	43,430	43,430	-	0%
Contingcy	-	-	-	32,083	32,083	-	32,083	n/a
Bond Application Report	-	37,500	37,500	-	37,500	37,500	-	0%
Attorney General Fee	-	1,920	1,920	-	1,920	-	1,920	n/a
.25% TCEQ Bond Issuance Fee	-	4,800	4,800	-	4,800	4,800	-	0%
TOTAL NON-CONSTRUCTION COSTS	213,005	394,251	607,256	50,319	657,575	657,575	-	
TOTAL BOND ISSUE	**$ 1,475,430**	**$ 394,251**	**$ 1,869,681**	**$ 50,319**	**$ 1,920,000**	**$ 1,920,000**	**$ -**	

[1] Projected Costs include a contingency for future costs

Report on the Application of Certain Agreed Procedures

relating to

Belvedere Municipal Utility District

$1,000,000 Series 2016 Bonds

WEST, DAVIS & COMPANY
A LIMITED LIABILITY PARTNERSHIP

Board of Directors
Belvedere Municipal Utility District
c/o Lloyd, Gosselink, Rochelle & Townsend, PC
816 Congress Av #1900
Austin, Texas 78701

We have performed the procedures described below, which were agreed to by you, with respect to the accompanying Recapitulation of Amounts to be Reimbursed to Developers (Schedule A) and the Comparison of Costs Schedule to the Interoffice Memorandum (Schedule B) as adopted by the Commission order approving the bond issue. Our report was made for the purpose of providing you with information relating to the use of proceeds of the $1,000,000 Belvedere Municipal Utility District (District) Unlimited Tax Bonds, Series 2016. The District's management is responsible for the District's accounting records. This agreed-upon procedures engagement was conducted in accordance with attestation standards established by the American Institute of Certified Public Accountants. The sufficiency of the procedures is solely the responsibility of the Board of Directors and the Texas Commission on Environmental Quality (TCEQ), the specified users of this report. Consequently, we make no representation regarding the sufficiency of the procedures described below either for the purpose for which our report has been requested or for any other purpose. The procedures we performed are summarized as follows:

1. Information for the use of proceeds was obtained from the TCEQ order dated November 6, 2015 approving the $1,000,000 Bond Issue, which included the interoffice staff memorandum.
2. Information for the costs to be reimbursed to the developers was obtained from the inspection of reimbursable costs and related supporting documentation as of March 15, 2016.
3. Non-construction costs to be funded from this bond issue were obtained from invoices and discussions with various parties who are to be reimbursed from this bond issue.

Because the above procedures do not constitute an examination made in accordance with generally accepted auditing standards, we do not express an opinion on the accompanying schedules. If we had performed additional procedures, other matters might have come to our attention that would have been reported to you. This report relates only to the attached Schedules A and B and does not extend to any financial statements of the District taken as a whole. This report is intended solely for the use of the specified users listed above and is not intended to be and should not be used by anyone other than those specified parties.

West, Davis and Company

Austin, Texas
March 15, 2016

11824 JOLLYVILLE RD, SUITE 100 • AUSTIN, TEXAS 78759-2322
TELEPHONE 512.922.8809 • FACSIMILE 512.340.0333

SCHEDULE A

Belvedere Municipal Utility District

CALCULATION OF AMOUNTS TO BE PAID TO DEVELOPER FROM SERIES 2016 BOND ISSUE PROCEEDS

In Accordance with agreements with Belvedere Municipal Utility District
Dated July 18, 2006

	Developer A - Hamilton Bee Cave, LP			
Description	% Complete (Date Complete)	Reimbursable Cost		Interest[1]
DISTRICT FACILITIES				
Joe Bland Construction, Inc.				
(Water & Drainage)	100%			
Phase VI	Jan-15	$ 481,621		
Less Ineligible Items		(283,712)	197,909	
Interest Accrued at 3.040425%				20,110
CC Carlton Industries				
(Water & Drainage)	100%			
Phase VII-B	Mar-08	638,011		
Less Ineligible Items		(364,611)	273,400	
Interest Accrued at 3.040425%				16,553
LJA Engineering, Inc.	100%			
Terracon				
Engineering, Testing & Inspections		350,331		
Less Ineligible Items		(199,310)	151,021	
Interest Accrued at 3.040425%				16,218
Lower Colorado River Authority	100%			
West Travis County Public Utility Authority				
Impact Fees		87,962		
Less Ineligible Items		-	87,962	
Interest Accrued at 3.040425%				-
West Travis County Public Utility Authority	100%			
Inspections		15,124		
Less Ineligible Items		-	15,124	
Interest Accrued at 3.040425%				-
TOTAL DUE DEVELOPER A			**725,416**	**52,881**
TOTAL TO BE PAID FROM SERIES 2016 BOND ISSUE PROCEEDS				**$ 778,297**

Note 1: Interest is based on an expected reimbursement date of March 15, 2016.
Note 2: The Distric was granted a waiver of the two year limit on interest accrual.
Note 3: The District applied for and was granted by the Texas Commission on Environmental Quality an exception to the 30% Developer Contribution Requirement. Therefore, these are reimbursed at 100% of the Developer's Cost.

Schedule B

Belvedere Municipal Utility District

COMPARISON OF ACTUAL COSTS WITH COST SUMMARY AS APPROVED BY THE TEXAS COMMISSION ON ENVIRONMENTAL QUALITY

Cost Item	Costs Reimbursed to Developers (1)	Costs Paid Directly by District (2)	Total Paid Costs (1)+(2) (3)	Projected Costs (4)	Total Paid and Projected (3)+(4) (5)	Interoffice Memorandum Total (6)	Variance Over or (Under) (5)-(6) (7)	% Variance Over or (Under) (7)/(6)X100 (8)
Construction Costs								
District Items:								
Phase VI	197,909	-	197,909	-	197,909	197,909	-	0%
Phase VII-B	273,400	-	273,400	-	273,400	273,400	-	0%
Engineering	151,021		151,021		151,021	151,021	-	0%
Impact Fees	87,962		87,962		87,962	87,962	-	0%
Inspections	15,124		15,124		15,124	15,124	-	0%
Less: Amount Funded Using Surplus Funds	-		-		-	(74,597)	74,597	-100%
TOTAL CONSTRUCTION COSTS	725,416	-	725,416	-	725,416	650,819	74,597	
Non-Construction Costs								
Legal Fees	-	30,000	30,000	-	30,000	30,000	-	0%
Financial Advisor Fees	-	12,500	12,500	-	12,500	12,500	-	0%
Capitalized Interest	-	61,408	61,408	-	61,408	100,000	(38,592)	-39%
Developer Interest	52,881	-	52,881	-	52,881	80,716	(27,835)	-34%
Bond Underwriter's Discount	-	19,549	19,549	-	19,549	30,000	(10,451)	-35%
Creation Expenses	-	-	-	-	-	-	-	0%
Operating Expenses	-	-	-	-	-	-	-	0%
Bond Issuance Costs[1]	-	33,828	33,828	-	33,828	52,465	(18,637)	-36%
Contingcy	-	-	-	20,918	20,918	-	20,918	n/a
Bond Application Report	-	40,000	40,000	-	40,000	40,000	-	0%
Attorney General Fee-.10%	-	1,000	1,000	-	1,000	1,000	-	0%
TCEQ Bond Issuance Fee-.25%	-	2,500	2,500	-	2,500	2,500	-	0%
TOTAL NON-CONSTRUCTION COSTS	52,881	200,785	253,666	20,918	274,584	349,181	(74,597)	
TOTAL BOND ISSUE	**$ 778,297**	**$ 200,785**	**$ 979,082**	**$ 20,918**	**$ 1,000,000**	**$ 1,000,000**	**$ -**	

[1] Projected Costs include a contingency for future costs

EXHIBIT F

FACILITIES CONVEYANCE AGREEMENT BETWEEN
BELVEDERE MUNICIPAL UTILITY DISTRICT AND HAMILTON BEE CAVE L.P.

This Facilities Conveyance Agreement (the "Agreement") is made and entered into as of the __ day of May, 2018, by and between **Belvedere Municipal Utility District**, a water district operating pursuant to Chapters 49 and 54, Texas Water Code (herein the "District"), and **Hamilton Bee Cave LP.** (herein the "Seller").

RECITALS

1. The District provides recreation facilities and services within its boundaries.

2. Seller is has developed land within the District, and, in connection therewith, Seller has acquired or caused to be constructed certain recreational facilities.

3. Seller has recently conveyed the real property on which the Facilities (defined below) are located to the Belvedere Homeowners' Association pursuant to general warranty deeds filed recorded in the Official Property Records of Travis County, Texas.

4. Seller wishes to convey and District wishes to take title to such facilities so that the District can provide recreational facilities and services within its boundaries.

AGREEMENT

For and in consideration of the premises and of the mutual obligations, covenants, and benefits hereinafter set forth, District and Seller contract and agree as follows:

1. Definitions.

   (a) Construction Contracts: Contracts pursuant to which the Facilities (defined below) were installed by the contractor.

   (b) Facilities:

i. Recreational facilities constructed to serve Belvedere, a subdivision located in Travis County, Texas, and which are further identified on **Exhibit A**.

2. Sale and Purchase. Seller hereby sells, conveys, transfers, and delivers to District all of the Facilities free and clear of all liens, claims, encumbrances, options, charges, assessments, reservations, or restrictions. The Facilities being conveyed hereby are more completely described in the plans and specifications described in Section 5 herein, which are incorporated herein by reference.

3. Assignment. Seller hereby assigns all of its rights under the Construction Contracts to District and agrees to make provision for the transfer of any performance and payment bonds, and guarantees and warranties executed by the contractor and all other rights of Seller pursuant to the provisions of the Construction Contracts.

4. Representations by Seller. Seller represents to District that:

(a) Title. All the properties of Seller covered by this Agreement are hereby conveyed to District, free and clear of all liens, claims, encumbrances, options, charges, assessments, reservations, and restrictions.

(b) Rights-of-Way, Easements, etc. Seller represents, warrants and guarantees that the Facilities are located in public utility easements or road rights-of-way as shown on recorded plats or are the subject of a separate easement conveyance to the District. Seller represents that said plats and/or conveyances provide easements and rights-of-way which are adequate and sufficient to permit District to operate the Facilities, and any easements and rights-of-way held by Seller in connection therewith are hereby transferred to District whether or not expressly described herein.

(c) Possession. Seller is in possession of the Facilities and no objection to the location or use of the Facilities or adverse claims of title to the lands, easements, rights-of-way, licenses, permits, or leases on which the Facilities are situated is presently being asserted by any person or persons.

(d) Legal Proceedings. There are no actions, suits, or proceedings pending or, to the knowledge of Seller, threatened or affecting the properties to be sold hereunder and there are no pending condemnation proceedings of which Seller is aware connected with the Facilities or other properties to be conveyed hereunder.

(e) Known Defects. Seller represents and warrants that the Facilities, including any easements or rights-of-way or other properties to be conveyed hereunder are free of known defects, either legal or technical, that would prohibit District's use of the Facilities or other properties to be conveyed hereunder.

(f) Authorization. This Agreement, the transactions contemplated herein, and the execution and delivery of this Agreement have been duly authorized by Seller.

(g) No Violation of Other Contracts. This Agreement, and the warranties, representations, and covenants contained herein, and the consummation of the transactions contemplated herein will not violate or constitute a breach of any contract or other agreement to which Seller is a party.

(h) "Record" or "As-Built" Drawings and Engineer's Certificate. Contemporaneously herewith Seller has provided District with a complete set of "record or as-built" drawings, together with a certificate by a registered professional engineer that the Facilities were constructed as indicated on the drawings.

5. Plans and Specifications. Seller warrants and represents that the Facilities are constructed in accordance with the plans and specifications previously approved by the District.

6. Expenses. Except as specifically set forth herein, each party shall pay its own expenses incident to carrying this Agreement into effect and consummating all transactions contemplated hereby. All ad valorem or property taxes applicable to the Facilities to the date of closing, including, without limitation, all taxes for 2017 and 2018, and any "rollback" taxes assessed due to a change in land usage, shall be the obligation of Seller.

7. Further Assurances. Seller agrees that from time to time and upon the request of District, Seller will execute and deliver such other instruments of conveyance and transfer and

take such other action as may be reasonably required to more effectively convey, transfer to, and vest in District and to put District in possession of all of the Facilities conveyed, transferred, and delivered hereunder, and, in the case of contracts and rights, if any, which cannot be transferred effectively without the consent of other parties, to obtain such consents and take such other action as may be reasonably necessary to assure to District the rights and benefits thereof.

8. Representations Survive Conveyance. The agreements and representations made by the parties to this Agreement shall survive the conveyance of the Facilities.

9. Miscellaneous. This Agreement shall be governed by, and construed in accordance with, the laws of the State of Texas and can be changed or terminated only by an agreement in writing signed by the parties hereto. This Agreement embodies the entire understanding between the parties and there are no prior effective representations, warranties, or agreements between the parties.

WITNESS the execution of this Agreement in multiple counterparts, each of equal dignity, as of the ____ day of May, 2018.

BELVEDERE MUNICIPAL UTILITY DISTRICT

By:_____
Peter Golde
Board of Directors

ATTEST:

_____
Kim Clifford, Assistant Secretary
Board of Directors

[DISTRICT SEAL]

THE STATE OF TEXAS §
§
COUNTY OF TRAVIS §

This instrument was acknowledged before me on the ____ day of _____, 2018, by Peter Golde, Director of the Board of Directors of Belvedere Municipal Utility District, on behalf of said District.

_____
Notary Public Signature

(Seal)

SELLER
HAMILTON BEE CAVE, LP,
a Delaware Limited Partnership

By:_____
Joel H. Robuck
its Authorized Agent

THE STATE OF TEXAS §
§
COUNTY OF _____ §

This instrument was acknowledged before me on the ____ day of _____, 2018, by Joel H. Robuck, Authorized Agent of Hamilton Bee Cave LP, a Delaware limited partnership, on behalf of said limited partnership.

_____
Notary Public Signature

(Seal)

AFFIDAVIT AS TO NO LIENS

STATE OF TEXAS §
§
COUNTY OF TRAVIS §

BEFORE ME, the undersigned authority, on this day personally appeared JOEL H. ROBUCK, who, being by me first duly sworn, upon his oath says:

He is the President of HAMILTON BEE CAVE LP, which is this day conveying to BELVEDERE MUNICIPAL UTILITY DISTRICT all of said HAMILTON BEE CAVE LP's right, title, and interest in and to certain recreational facilities and improvements constructed to serve the District.

Said facilities and improvements are free and unencumbered, the contractors and subcontractors which installed same have been paid in full therefor, and there are no liens of any nature whatsoever against said facilities.

By:_____
Seller

THE STATE OF TEXAS §
§
COUNTY OF _____ §

This instrument was acknowledged before me on the ____ day of _____, 2018, by Joel H. Robuck, Authorized Agent of Hamilton Bee Cave LP, a Delaware limited partnership, on behalf of said limited partnership.

_____
Notary Public Signature

(Seal)

EXHIBIT A

The Facilities

Belvedere Amenity Center (1,875 sq/ ft) to include:

- Outdoor kitchen
- Septic
- Porches
- Breezeway
- Walkways
- **Pergola**
- Landscaping/irrigation/lighting
- HVAC system
- Propane tank & equipment
- Appliances

Parking lots (with retaining walls) (Existing & planned)
Trails (with exercise stations/benches)
Storage building (planned)
Culverts & Other Drainage Structures
Playscape (including canvas cover)
Sport Court
Mail Facility (except mailboxes)
All Other Benches, Swings & Metal Trash Bins

EXHIBIT G

TML
INTERGOVERNMENTAL RISK POOL

Workers' Compensation • Property • Liability

May 11, 2018

Ms. Stefanie Albright
General Counsel
Belvedere MUD
816 Congress Ave Ste 1900
Austin, TX 78701

RE: Proposal for Coverage

Dear Ms. Albright:

The Texas Municipal League Intergovernmental Risk Pool (the Pool) is pleased to provide this proposal for coverages as requested. Please review each section carefully.

There are a few points to which I would like to draw your attention:

Cumulatively over the past seven years, Liability rates have been reduced 25%, Workers' Compensation rates 21.8% and Property rates 16.3%.

The Pool recognizes that the most effective way to stabilize or lower rates is to prevent losses from occurring or, if they do occur, to minimize their impact through effective claims handling. Loss prevention services including site visits by loss prevention representatives, attendance at loss prevention seminars, access to the Pool's extensive loss prevention video library and online training are available to all of the Pool's members at no additional cost. A training schedule for the current quarter is included in the "Member Services" section of the proposal.

If full payment is made within 30 days of receipt of the first bill, the contribution will be reduced 2%. If quarterly payments are preferred, there is no interest charge or payment fee.

A Proposal Acceptance Form is included for the coverages being offered in this proposal. In order to bind coverage, please:

1. Complete and sign the Proposal Acceptance Form.

2. Return original documents to:

Texas Municipal League Intergovernmental Risk Pool
Underwriting Department
P.O. Box 149194
Austin, Texas 78714-9194

If you have any questions concerning this proposal, please call me at (512) 491-2363.

Sincerely,

Mr. Tracy Wood, AU
Membership Services Coordinator

TML
INTERGOVERNMENTAL RISK POOL

LP111
2/7/14

Bid / Proposal Summary

Date: 05/11/2018

Entity Name: **Belvedere MUD**
Entity ID: **3047**

Proposed Effective Date	Proposed Anniversary Date
05/17/2018	**05/17/2019**

Type of Coverage	Limit		Deductible	Annual Contribution
Real & Personal Property [1]	$ 577,158	☐ Actual Cash Value ☒ Replacement Cost	$ 10,000	$ 471
Wind and Hail Occurrence Deductible Reinstatement				$ 71
Boiler & Machinery [2]	$ 436,158	Per accident	$ 5,000	660

TOTAL ANNUAL:	$	1,202.00
2% Annual Payment Discount [3]:	$	24.04
Total Annual Contribution:	$	1,177.96
Quarterly Payment:	$	300.50

Total credit amount to be applied to the calculated contributions.

SEE PROPOSAL FOR OPTIONAL COVERAGES, LIMITS, DEDUCTIBLES, etc.

[1] Real & Personal Property deductible is on a per occurrence basis except for Wind and Hail that carries a 1% per building deductible and there is no coinsurance penalty.
[2] $5,000 minimum deductible applies.
[3] Annual Payment Discount applies if full annual contribution is paid within 30 days of the effective date, or receipt of your first bill, whichever is later. (The Annual Payment Discount does not apply to public officials' bonds or windstorm coverage for Tier 1 members.)

Property Proposal Acceptance Form

Member: Belvedere MUD
Member ID: 3047

Directions: This form must be completed, signed and returned. The Interlocal Agreement must also be completed and returned if you are not a current Liability or Property Fund participant. If time is of the essence, you may wish to use an express mail service or facsimile copier. In the event you submit these documents by facsimile, the originals must still be returned.

Indicate with [X] the coverages and method of payment that you are accepting. Forward all documents to:

Texas Municipal League Intergovernmental Risk Pool
Underwriting Department
P.O. Box 149194
Austin, Texas 78714-9194
Phone: 1-800-537-6655 or FAX: 512-491-2404

COVERAGE	DEDUCTIBLE	CONTRIBUTION	EFFECTIVE DATE	ANNIVERSARY DATE
[ ] Real and Personal Property				
Limit _____	$ _____	$ _____	_____	_____
[ ] Actual Cash Value OR		[ ] Special Form OR		
[ ] Replacement Value		[ ] Named Perils		
[ ] Boiler and Machinery				
Accident Limit _____	$ _____	$ _____	_____	_____
[ ] _____	$ _____	$ _____	_____	_____

Method of Payment: [ ] Quarterly [ ] Annually (2% Discount)

I, the undersigned, as an authorized representative, do hereby accept on behalf of the above named political subdivision the portions of the proposal as indicated above.

Signature of Authorized Official: _____

Title: _____

Date: _____

The Signed Interlocal Agreement Must Accompany This Form

(Exception: Current Liability/Property Fund participants are not required to submit a new Interlocal Agreement.)

OFFICE USE ONLY
Contribution: _____ Member ID # _____
Verified by: _____
( ) New ( ) Re-awarding ( ) Adding Coverage

PROPERTY COVERAGE PROPOSAL

The Pool's property coverage is available to protect you from loss resulting from the destruction of, or damage to, real and personal property (buildings and contents), mobile equipment, boiler and machinery and electronic data processing equipment. Property coverage through the Pool is especially responsive to the particular needs of local governments. Coverage for the following is automatically provided at specific limits:

* Valuable Papers - $10,000
* Accounts Receivable - $10,000
* Loss of Revenue, Extra Expense & Rents - $50,000
* Leasehold Interest - $5,000
* Personal Effects of Employees and Officials - $5,000
* Fine Arts Per Reported Schedule

Coverage for these items must normally be added to standard commercial policies at additional cost.

Coverage for Employee Fidelity, Crime, and Animal Mortality may also be added to the Pool's property coverage.

Currently over 2,200 Members participate in the Pool's property program. Participants benefit directly as Members' Equity in the Property Fund grows. Fund Members are eligible to receive Equity Returns at the end of each Fund Year provided total Members' Equity meets certain predetermined levels. Eligibility of individual Members may also depend on length of membership and loss experience.

The Pool retains the first $4,000,000 of loss per occurrence for property exposures and 100% of Boiler and Machinery losses. The Pool purchases property reinsurance from several reinsurance companies and Lloyd's of London syndicates. A Reinsurance Fact Sheet is included in the Background Section of this proposal.

Property coverage extends to all owned buildings and/or contents shown on the schedule. Coverage for Mobile Equipment may be included at your option. The limit of coverage for Real and Personal Property (other than Mobile Equipment) is a total of all reported values, including buildings and contents. There is no coinsurance penalty. The Real and Personal Property deductible applies on a per occurrence basis, rather than a per building basis. Coverage for real and personal property is available in two forms:

SPECIAL FORM - This form provides the broadest coverage for all risk of physical loss unless specifically excluded. Exclusions and/or limitations to the property and perils covered are listed in the Special Form Property Coverage section of the Property Coverage Document.

NAMED PERILS FORM - This form provides coverage for only those specific perils listed in the Names Peril Coverage Option of the Property Coverage Document.

A copy of the Property Coverage Document containing both coverage forms is included for your review.

Real and Personal Property and Electronic Data Processing Equipment may be covered for either "replacement cost" or "actual cash value". Actual Cash Value is defined as replacement cost less depreciation. Mobile Equipment may be covered for replacement cost or ACV, subject to a maximum recoverable equal to the value shown on the Mobile Equipment schedule. An entity may choose to accept each type of property coverage (real and personal property, mobile equipment) independently, and at different deductibles. Total contributions are determined based upon actual exposures for each local government with an annual adjustment for changes in rating or changes in the property schedules or values.

Property Coverage Features

The Texas Municipal League Intergovernmental Risk Pool's property coverage includes the following features at no additional cost:

Coverage	*Comments*
Coinsurance Provision	None
Pollution Damage to Covered Property Caused by a Covered Peril	Included at Real and Personal Property Limit
Pollutant Clean up	$20,000 each covered premises
Accounts Receivable	$10,000*
Valuable Papers/EDP Media	$10,000*
Loss of Revenue/Extra Expense/Rental Income	$50,000*
Personal Effects of Employees/Volunteers	$5,000*
Outdoor Property - Trees, Plants, Shrubs	$10,000 per occurrence* $250 Any one tree, plant or shrub*
Debris Removal	Included at Real and Personal Property Limit
Demolition of undamaged portions of covered structures	Included at Real and Personal Property Limit
Boiler & Machinery	Included (except electric generating plants) (Charge may apply to certain Members)
Increased cost of construction due to Building Ordinances	Included at Real and Personal Property Limit
Loss to undamaged portion of a covered structure	Included at Real and Personal Property Limit
Newly acquired/constructed structures	Automatic $1,000,000 or total Building and Contents values, whichever is less. Additional limits available upon notification. No time limitation applies. Certain types of property must be reported.
Property in Transit	$1,000,000
Property Off Premises	Included at Real and Personal Property Limit
Sewer Backup	Included at Real and Personal Property Limit
Communications Equipment	Included at Real and Personal Property Limit
Computer Equipment	Included at Real and Personal Property Limit
Electrical Damage – EDP equipment	Included at Real and Personal Property Limit

Property Coverage Features

Glass Breakage	Included at Real and Personal Property Limit
Glass Display or Trophy Cases	Included at Real and Personal Property Limit
Ground Maintenance Equipment	Included at Real and Personal Property Limit
Fine Arts	Lesser of repair cost or scheduled value *Must be reported*
Fire Department Service Charge	Included
Fire Equipment Recharge	Included
Commandeered Boats	Included in Mobile Equipment
Outdoor Property - Detached Signs, Fences, Antennas	Included at Real and Personal Property Limit *Must be reported*
Temporary repairs after a loss to prevent further damage	Included at Real and Personal Property Limit
Inventory costs related to a loss	Included
Portable equipment	Included at Real and Personal Property Limit
Property of Others	Included at Real and Personal Property Limit
Premises Boundary	None
Spoilage	Included at Real and Personal Property Limit
Off Premises Utility Failure	Included at Real and Personal Property Limit
Lock replacement after a loss	Included at Real and Personal Property Limit
Changes in temperature/humidity	Included at Real and Personal Property Limit
Architectural/Engineering fees incurred as the result of a loss	Included
Underground Sprinkler Systems	Included at Real and Personal Property Limit *Must be reported*

* These are the basic Coverage Extension Limits provided at no cost to the Member. Additional limits are available and if this Invitation to Bid requests such additional limits, they have been included in this response.

PROPERTY COVERAGE PROPOSAL

1. The attached proposal shows the annual price of various options for property coverages which are available to you through the Texas Municipal League Intergovernmental Risk Pool (the Pool). The coverage and limits you requested are shown on the Summary page at the front of this Proposal. The same information is included in this section of the Proposal along with various options available for deductibles, coverages and limits.

2. Attached to this proposal are schedules showing the property and equipment values that you reported. Your proposal is based on the values shown in these schedules. If any of the information shown on these schedules is incorrect, or if any items are omitted, the contributions may need to be adjusted. Please note the information in the heading of each schedule.

3. You may choose Named Perils or Special Form coverage as described on the following page of this section of the Proposal. Also included in this section are options to add Flood and Earthquake coverage for your Real and Personal property. Flood coverage is automatically included for Electronic Data Processing Equipment. Flood and Earthquake coverage is also included in your Mobile Equipment Coverage.

4. If you acquire property during the year, please report the values to us. You will not be billed for additional property until the total additional amount exceeds $1,000,000 or your Real and Personal Limit, whichever is less.

5. As an additional service, the Pool will provide property valuations on most buildings at no cost to Pool members.

PROPERTY SUMMARY AND DEDUCTIBLE OPTIONS

Member: Belvedere MUD
Member ID: 3047
Coverage Period: 05/17/2018 to 05/17/2019

The annual contributions for the options shown below are based on the coverage and schedule information submitted and include increased Coverage Extension limits, if any. Changes to schedules may require recalculation of the contribution.

REAL AND PERSONAL PROPERTY (Excluding Flood and Earthquake)

Limit:	$577,158	Transit Limit:	$577,158
Coverage Extensions:	As Scheduled	Windstorm:	Included
Valuation Basis:	Replacement Cost	Coverage Basis:	Special Form

Deductible	100	250	500	1,000	2,500	5,000	10,000	25,000
Contribution	$1,299	$965	$847	$743	$654	$594	$542	$512

BOILER AND MACHINERY

Valuation Basis:	Replacement Cost
Per Accident Limit:	$436,158

Deductible	5,000	10,000						
Contribution	$660	$660						

Definitions:

Replacement Cost: The cost to repair or to replace new for old with like kind and quality, whichever is less. Property not actually repaired or replaced shall be valued at Actual Cash Value. Refer to the Property Coverage Document.

Actual Cash Value: The cost to repair or to replace with like kind and quality less depreciation. Refer to the Property Coverage Document.

Scheduled Basis: The cost to repair or the per item scheduled value, whichever is less.

Real and Personal Property Schedule

Member: Belvedere MUD
Member ID: 3047
Coverage Period: 05/17/2018 to 05/17/2019 Shown As of 05/17/2018

TML INTERGOVERNMENTAL RISK POOL

The contribution and limit calculated for your Real and Personal Property Coverages are based on the following schedule. The values shown are the estimated Replacement Cost or Actual Cash Value (RC or ACV) unless otherwise noted and endorsed. Any changes or corrections may require adjustment to the contribution. Improvements and betterments to locations you lease from others are included with the contents value. Your elected Coverage Extension limits are shown on a separate schedule.

ID	Address or Site Secondary ID	Year Built	Occupancy Department	Bldg Value Valuation Basis	Contents Value Valuation Basis
1	17400 Flagler Dr	2008	Amenity Center/Porches (2)/Bre	383,158	20,000
			Parks	RC	RC
2	17400 Flagler Dr	2008	Outdoor Kitchen	6,000	0
			Parks	RC	
3	17400 Flagler Dr	2008	Sport Court	35,000	0
			Parks	RC	
4	17400 Flagler Dr	2008	Walkways/Parking Lot	20,000	0
			Parks	RC	
5	17400 Flagler Dr	2008	Irrigation	10,000	0
			Parks	RC	
6	17400 Flagler Dr	2008	Lighting/Poles	10,000	0
			Parks	RC	
7	17400 Flagler Dr	2008	Septic System	23,000	0
			Parks	RC	
8	17400 Flagler Dr	2008	Playscape/Shades	40,000	0
			Parks	RC	
9	17400 Flagler Dr	2008	Mail Court/Pavilion	30,000	0
			Parks	RC	
Coverage: Real & Personal Property		Total Items:	9	557,158	20,000

Coverage Extensions Schedule

Member: Belvedere MUD
Member ID: 3047
Coverage Period: 05/17/2018 to 05/17/2019 Shown As of 05/17/2018

Elected Coverage Extension limits are shown below. Any changes or corrections may require adjustment to the contribution. Note: Limits for Newly Acquired Property and Pollutant Cleanup and Removal may not be increased above the limits indicated below.

Coverage Extension	Limit
Valuable Papers and Records & EDP Media	$10,000
Accounts Receivable	$10,000
Loss of Revenue, Extra Expense and Rental Value	$50,000
Personal Property of Employees and Officials	$5,000
Leasehold Interest	$5,000
Outdoor Trees and Shrubs ($250 per item)	$10,000
Newly Acquired Property	$1 Million or the Real & Personal Property Limit, whichever is less
Pollutant Cleanup and Removal	$20,000 each premises

Boiler and Machinery Schedule

Member: Belvedere MUD
Member ID: 3047
Coverage Period: 05/17/2018 to 05/17/2019 Shown As of 05/17/2018

The contribution and Per Accident Limit shown for your Boiler & Machinery Coverage are based on the following schedule. The values shown are the estimated Replacement Cost or Actual Cash Value (RC or ACV) unless otherwise noted and endorsed. Any changes or corrections may require adjustment to the contribution.

ID	Address or Site Secondary ID	Occupancy Department		Bldg Value Valuation Basis	Contents Value Valuation Basis
1	17400 Flagler Dr	Amenity Center/Porches (2)/Breezeway		$383,158	$20,000
		Parks & Recreation		Replacement Cost	Replacement Cost
5	17400 Flagler Dr	Irrigation		$10,000	$0
		Parks & Recreation		Replacement Cost	Replacement Cost
7	17400 Flagler Dr	Septic System		$23,000	$0
		Parks & Recreation		Replacement Cost	Replacement Cost
Coverage: Boiler and Machinery Schedule		Total Items:	3	416,158	20,000

WIND AND HAIL DEDUCTIBLE

This endorsement forms a part of the **Declarations** to which attached, effective on the inception date of the coverage unless otherwise stated herein, and modifies such coverage as is afforded by the provisions of the coverage shown below:

REAL AND PERSONAL PROPERTY COVERAGE

Member	:	Belvedere MUD
Member ID	:	3047
Effective Date	:	05/17/2018

With respect to loss caused by wind or hail, it is agreed that the deductible for each occurrence will be the lesser of the following:

1. 1% of the individual scheduled Building Value for each damaged structure at the time of loss; or
2. 0.1% of the Total Building Value for all buildings scheduled at the time of the loss.

In no event shall the percent deductible be less than the occurrence deductible shown on the **declarations** page.