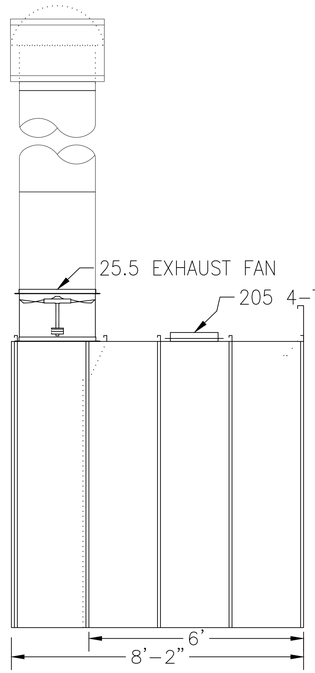

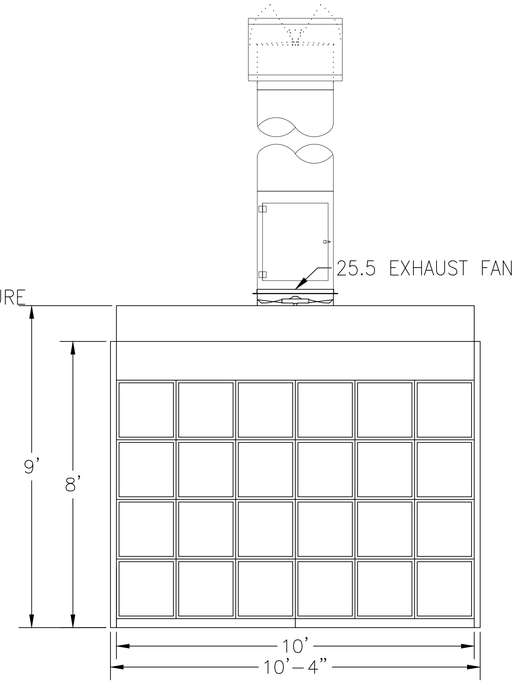

53993
SPRAY APPLICATIONS
USING FLAMMABLE
AND COMBUSTIBLE
MATERIALS
CONFORMS TO NFPA STD.33

OPEN FACE INDUSTRIAL SPRAY BOOTH
MODEL: EIBF108**6**

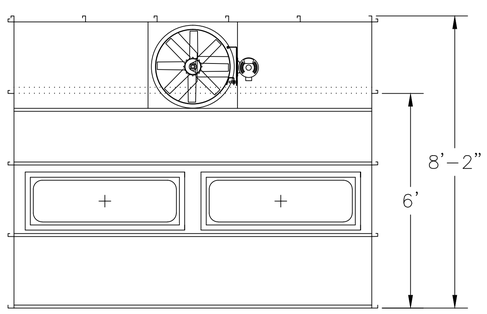

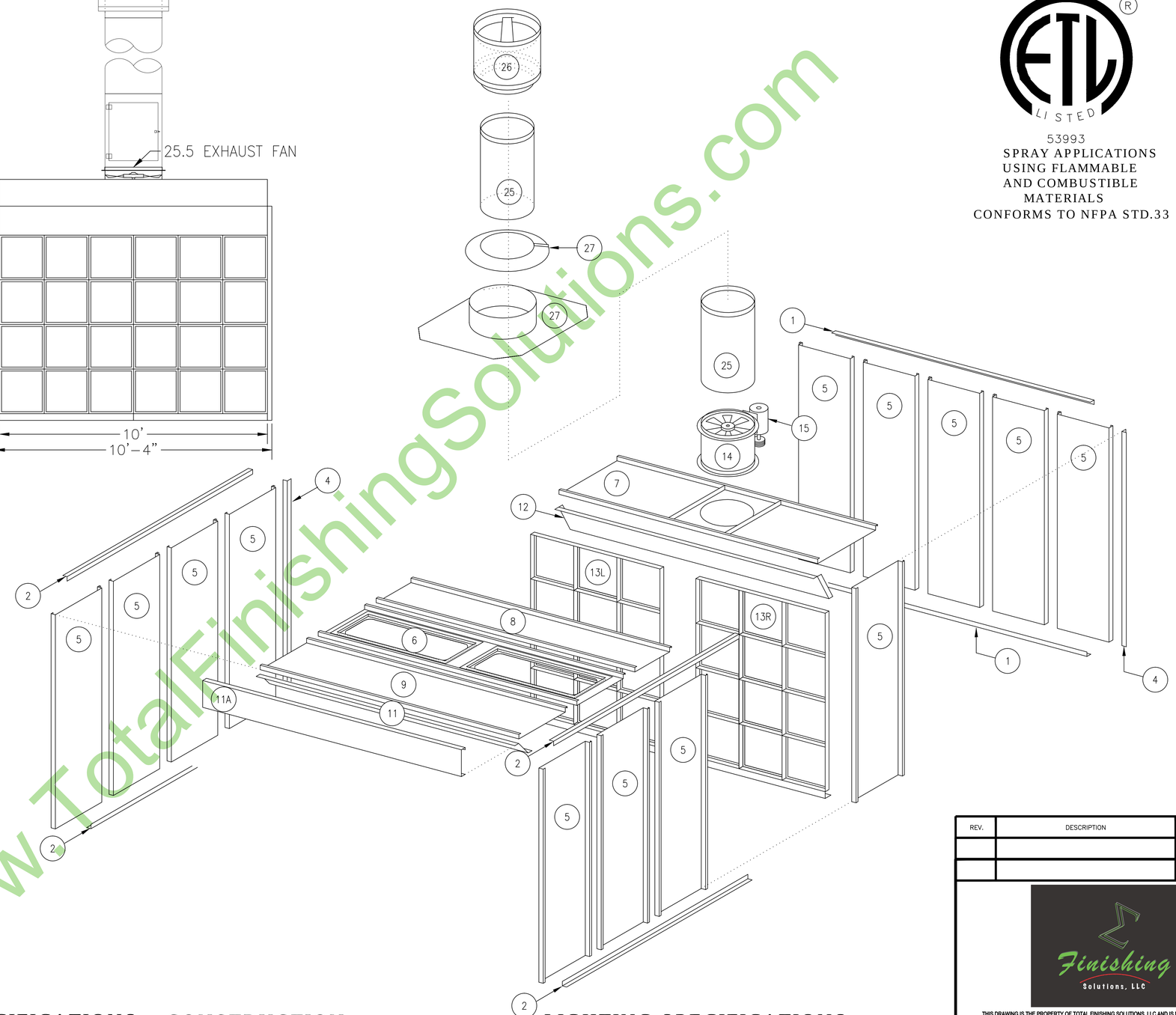

www.TotalFinishingSolutions.com

BOOTH SPECIFICATIONS

- MODEL: EIBF108 FLOOR FILTER BOOTH, OPEN FACE-ETL LISTED
- LENGTH= 8'-2" O.D. / 6'-0" I.D.
- WIDTH= 10'-2" O.D./ 10'-0" I.D.
- HEIGHT= 9'-0" O.D. / 8'-0" I.D.

EXHAUST SPECIFICATIONS

- EXHAUST FAN TYPE: 1-EACH 25 1/2" DIAMETER NON-SPARKING BLADE
- MOTOR TYPE: 1-2HP./3-PHASE.
- VOLTAGE= 230VAC 3-PHASE 60HZ
- C.F.M. RATING= Total 7,000 @ 1/2" STATIC PRESSURE
- EXHAUST CELLS= (24) 20" X 20"X 2" FIBERGLASS ARRESTORS
- ONE MANOMETER ONE MAGNECTIC AIR VALVE
- ONE MANUAL CONTROL PANEL MODEL: CP1

CONSTRUCTION

- "SINGLE WALL" 18 GA. G-90 GALVANIZED STEEL PANELS
- BASE AND TIE-IN ANGLE 14 GA. G-90 GALVANIZED STEEL
- SUPPORT CHANNEL 12 GA. G-90 GALVANIZED STEEL
- PANEL ASSEMBLY TYPE= 1/4" X 3/4" SELF-TAPPING SCREWS ON 10" CENTERS TYP.

LIGHTING SPECIFICATIONS

- TYPE = OPEN 4-TUBE FLUORESCENT
- VOLTAGE= STANDARD: 277 VOLT
- QUANTITY= 2-EA. TOTAL.

REV.	DESCRIPTION	DATE	BY

Finishing Solutions, LLC

THIS DRAWING IS THE PROPERTY OF TOTAL FINISHING SOLUTIONS, LLC AND IS NOT TO BE LOANED, COPIED, OR DUPLICATED UNLESS IN DIRECT CONNECTION WITH TOTAL FINISHING SOLUTIONS, LLC. ALL RIGHTS RESERVED. THIS DRAWING MUST BE RETURNED UPON REQUEST BY TOTAL FINISHING SOLUTIONS, LLC.

DRAWN FOR:

DESCRIPTION: OPEN FACE INDUSTRIAL SPRAY BOOTH MODEL: EIBF108 X 6FT DEEP

DRAWN BY:	CHECKED BY:	APPROVED BY:	DATE:
J.BARTON			07/11/07
INSTALLED BY:	FIELD CHANGED BY:	SCALE: 1/2"=1'	DRAWING NAME: EIBF108-6DP ASSEMBLY