

COUNTY LOCATION MAP

NOT TO SCALE

NORTH

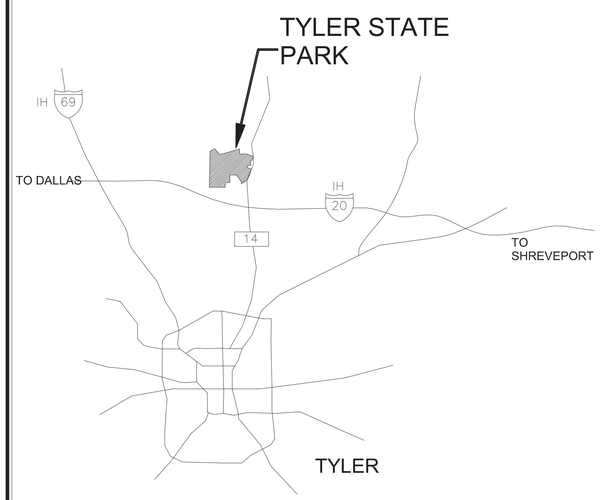

VICINITY MAP

NOT TO SCALE

NORTH

TYLER STATE PARK

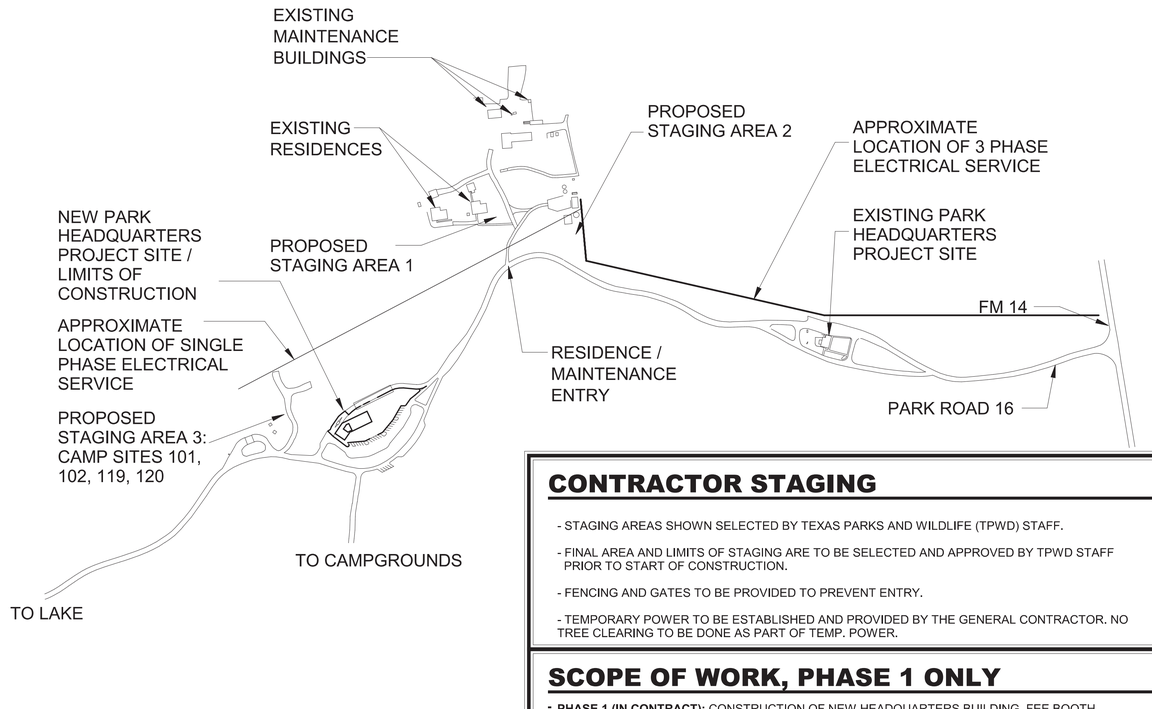

SITE LOCATION MAP

NOT TO SCALE

NORTH

CONTRACTOR STAGING

- STAGING AREAS SHOWN SELECTED BY TEXAS PARKS AND WILDLIFE (TPWD) STAFF.
- FINAL AREA AND LIMITS OF STAGING ARE TO BE SELECTED AND APPROVED BY TPWD STAFF PRIOR TO START OF CONSTRUCTION.
- FENCING AND GATES TO BE PROVIDED TO PREVENT ENTRY.
- TEMPORARY POWER TO BE ESTABLISHED AND PROVIDED BY THE GENERAL CONTRACTOR. NO TREE CLEARING TO BE DONE AS PART OF TEMP. POWER.

SCOPE OF WORK, PHASE 1 ONLY

- **PHASE 1 (IN CONTRACT):** CONSTRUCTION OF NEW HEADQUARTERS BUILDING, FEE BOOTH, RADIO TOWER, ASSOCIATED UTILITIES AND SITEWORK. PROVIDE UTILITIES FOR IRON RANGER STATION.
- **TXDOT (NOT IN CONTRACT):** CONSTRUCTION OF NEW ROADS, BRIDGE, AND PARKING AREAS TO SERVE THE NEW HEADQUARTERS BUILDING. REVISE EXISTING ROADWAY AS REQUIRED TO WORK WITH NEW ROAD. ESTIMATED START DATE, SUMMER 2021
- **PHASE 2 (NOT IN CONTRACT):** DEMOLISH AND DISPOSE OF THE EXISTING HEADQUARTERS BUILDING AND REVISE THE ENTRY ROAD AND TURNAROUND. NEW LANDSCAPING / SEEDING AT AREA OF EXISTING HEADQUARTERS AND TxDOT ROAD PROJECT

TPWD TEAM

PROJECT MANAGER
Thea Luong, PMP
Texas Parks & Wildlife
512-389-8830
512-389-4757 (fax)
thea.luong@tpwd.texas.gov

CONTRACT MANAGER
Mandy Holcomb, CTCD CTCM
Texas Parks & Wildlife
512-389-4353 (direct)
512-389-4790 (fax)
mandy.holcomb@tpwd.texas.gov

DESIGN MANAGER
Megan Weinzierl, AIA, LEED AP
Texas Parks & Wildlife
512-389-4507 (direct)
512-389-4400 (fax)
megan.weinzierl@tpwd.texas.gov

CONSTRUCTION MANAGER
Mitchell Gibson
Texas Parks & Wildlife
512-627-4187 (cell)
gary.gibson@tpwd.texas.gov

PARK MANAGER
Derin DePalermo
Texas Parks & Wildlife
903-780-5779 (cell)
903-597-5338 x 240 (direct)
derin.depalermo@tpwd.texas.gov

INSPECTOR
Keith Moore/Carl Warren
Texas Parks & Wildlife
512-627-4373/512-627-4292 (cell)
281-456-8085/281-456-8166 (fax)
keith.moore@tpwd.texas.gov
carl.warren@tpwd.texas.gov

DESIGN TEAM

ARCHITECT :
Ford, Powell & Carson, Inc.
Rachel Wright, AIA
210-226-1246
210-226-6482 (fax)
Rwright@fpcarch.com

STRUCTURAL :
Architectural Engineers
Collaborative, LLC (F-1985)
Karina Tribble
512-472-2111
210-340-5728 (fax)
ktribble@aecollab.com

MEP:
Alderson & Associates, Inc (F-1008)
Dean Alderson
210-614-1110
210-615-8549 (fax)
dean@alderson-inc.com

TECHNOLOGY :
COMBS CONSULTING GROUP
Brian K. Combs, BICSI ID# 118077
210-698-7887
Brian.Combs@combs-group.com

CIVIL ENGINEER:
Pacheco Koch (F-469)
Christopher M. Jones, P.E., DBIA
972-235-3031
972-235-9544 (fax)
lnance@pkce.com

LANDSCAPE ARCHITECT :
Pacheco Koch
Kendall Hancey
972-235-3031
972-235-9544 (fax)
khancey@pkce.com

PROJECT

TYLER STATE PARK

HEADQUARTERS REPLACEMENT PHASE 1

PROJECT NO: 112741

DATE: JULY 03,2020

INDEX OF DRAWINGS

SHEET NO. DESCRIPTION

COVER COVER SHEET
G101 TAS STANDARDS
G102 TAS STANDARDS
G103 TAS STANDARDS
LSP100 LIFE SAFETY PLAN
C100 SITE SCOPE EXHIBIT
C200 DIMENSIONAL CONTROL PLAN
C300 DRAINAGE AREA MAP
C400 INTERIM GRADING PLAN
C401 GRADING & DRAINAGE PLAN
C402 STORM PROFILES & CALCS
C403 STORM DETAILS.
C500 UTILITY PLAN
C600 CONSTRUCTION DETAILS
C601 LIFT STATION
C602 LIFT STATION
C700 EROSION CONTROL PLAN
L101 TREE REMOVAL, PROTECTION AND SALVAGE PLAN
L201 LAYOUT PLAN
L202 HARDSCAPE DETAILS
L301 PLANTING PLAN
L302 PLANTING DETAILS
L303 PLANTING PLAN
A101 SITE PLAN
A102 CAMPSITE PLAN
A201 FLOOR PLANS
A202 ENLARGD FLOOR PLAN - AREA A
A203 ENLARGED FLOOR PLAN - AREA B
A204 ROOF PLAN
A301 BUILDING ELEVATIONS
A302 BUILDING ELEVATIONS
A303 BUILDING SECTIONS
A304 STAIR PLAN & SECTIONS
A401 SCHEDULES & WALL TYPES
A501 REFLECTED CEILING PLANS
A502 REFLECTED CEILING PLAN - AREA A
A503 REFLECTED CEILING PLAN - AREA B
A504 FURNITURE PLAN
A505 FURNITURE SCHEDULE
A601 INTERIOR ELEVATIONS
A602 INTERIOR / STOREFRONT ELEVS.
A701 WALL SECTIONS
A702 WALL SECTIONS
A703 WALL SECTIONS
A801 PLAN DETAILS
A802 SECTION DETAILS
A803 SECTION DETAILS
A804 DOOR DETAILS
A805 CASEWORK DETAILS
A901 RENDERINGS
S100 GENERAL NOTES
S101 GENERAL NOTES
S102 GENERAL NOTES
S200 STRUCTURAL ISOMETRIC
S201 FIRST FLOOR FRAMING PLAN - OVERALL
S201.1 BASEMENT PLAN
S202 FIRST FLOOR FRAMING PLAN - AREA A
S203 FIRST FLOOR FRAMING PLAN - AREA B
S204 ROOF FRAMING PLAN - OVERALL
S205 ROOF-FRAMING PLAN - AREA A
S206 ROOF FRAMING PLAN - AREA B
S206.1 POP UP ROOF FRAMING PLAN
S301 CONCRETE TYPICAL DETAILS
S302 CONCRETE TYPICAL DETAILS
S303 CONCRETE TYPICAL DETAILS
S310 CONCRETE DETAILS
S311 CONCRETE DETAILS
S401 MASONRY TYPICAL DETAILS
S501 STEEL TYPICAL DETAILS
S502 STEEL TYPICAL DETAILS
S503 STEEL TYPICAL DETAILS
S510 TRUSS DETAILS
S511 STEEL DETAILS
S601 WOOD TYPICAL DETAILS
S602 WOOD TYPICAL DETAILS
S610 WOOD DETAILS
M001 MECHANICAL SYMBOLS & ABBREV.
M101 MECHANICAL FLOOR PLAN
M102 MECHANICAL ENLGD FLR PLN - AREA A
M103 MECHANICAL ENLGD FLR PLN - AREA B
M201 MECHANICAL SCHEDULES
M301 MECHANICAL DETAILS
M302 MECHANICAL DETAILS
M401 MECHANICAL CONTROLS
M402 MECHANICAL CONTROLS
M403 MECHANICAL CONTROLS
E001 ELECTRICAL SYMBOLS & ABBREVIATIONS
E101 ELECTRICAL SITE PLAN
E102 ELECTRICAL SITE PLAN - OVERALL
E201 LIGHTING FLOOR PLAN
E301 POWER FLOOR PLAN
E302 MECH EQUIP POWER FLOOR PLAN
E303 POWER ENLARGED FLOOR PLAN
E304 POWER ENLARGED FLOOR PLAN
E401 SPECIAL SYSTEMS FLOOR PLAN
E501 ELECTRICAL RISER DIAGRAM
E601 ELECTRICAL SCHEDULES
E602 ELECTRICAL SCHEDULES
E701 ELECTRICAL DETAILS
P702 ELECTRICAL DETAILS
P-001 PLUMBING SYMBOLS & ABBREVIATIONS
PS-101 PLUMBING SITE PLAN
P-101 PLUMBING FLOOR PLAN - GRAVITY
P-102 PLUMBING ENLRGD FLR PLN - AREA A - GRAVITY
P-103 PLUMBING ENLRGD FLR PLN - AREA B - GRAVITY
P-104 PLUMBING FLOOR PLAN - PRESSURE
P-105 PLUMBING ENLRGD FLR PLN - AREA A - PRESSURE
P-106 PLUMBING ENLRGD FLR PLN - AREA B - PRESSURE
P-107 PLUMBING ENLRGD FLR PLN - GENERATOR AREA
P-201 PLUMBING RISER DIAGRAM - GRAVITY
P-202 PLUMBING RISER DIAGRAM - PRESSURE
P-301 PLUMBING SCHEDULES
P-401 PLUMBING DETAILS
P-402 PLUMBING DETAILS
T000 TECHNOLOGY SYMBOLS & LEGEND
T101 TECHNOLOGY SITE PLAN
T201 TECHNOLOGY OVERALL FLOOR PLANS
T202 TECHNOLOGY FLOOR PLANS
T203 TECHNOLOGY FLOOR PLANS
T301 TECHNOLOGY ENLARGED PLANS & ELEVATIONS
T401 TECHNOLOGY TYPICAL DETAILS
T402 TECHNOLOGY TYPICAL DETAILS
T501 TECHNOLOGY TYPICAL LABELING SCHEME
TS000 SECURITY SYMBOLS & LEGENDS
TS101 SECURITY SITE PLAN
TS201 SECURITY OVERALL PLANS
TS401 SECURITY TYPICAL DETAILS
TS402 SECURITY TYPICAL DETAILS
TS403 SECURITY TYPICAL DETAILS
TS501 SECURITY SCHEDULES

Part 2 of 2

BUILDING CODE SUMMARY

A. INTERNATIONAL CODE COUNCIL

i. BUILDING CODE	INTERNATIONAL BUILDING CODE 2015
ii. RESIDENTIAL CODE	INTERNATIONAL RESIDENTIAL CODE 2015
iii. EXISTING BUILDINGS	INTERNATIONAL EXISTING BUILDINGS CODE 2015
iv. STRUCTURAL CODE	INTERNATIONAL BUILDING CODE 2015
v. PLUMBING CODE	INTERNATIONAL PLUMBING CODE 2015
vi. MECHANICAL CODE	INTERNATIONAL MECHANICAL CODE 2015
vii. ENERGY CODE	INTERNATIONAL ENERGY CODE 2015
viii. GAS CODE	INTERNATIONAL FUEL GAS CODE 2015

B. NATIONAL FIRE PROTECTION ASSOCIATION

i. ELECTRICAL CODE	NATIONAL ELECTRICAL CODE 2017

C. STATE ENERGY CONSERVATION OFFICE (SECO)/TEXAS COMPTROLLER'S OFFICE

1. ENERGY CODES FOR STATE BUILDINGS - See Energy Conservation Design Standards: Texas Administrative Code, Title 34, Part 1, Ch.19, Subchapter C
   a. COMPLIANCE WITH THE ENERGY CONSERVATION DESIGN STANDARD OF THE AMERICAN SOCIETY OF HEATING, REFRIGERATION AN D AIR CONDITIONING ENGINEERS (ASHRAE) /ILLUMINATING ENGINEERING SOCIETY OF NORTH AMERICA (IESNA). ENERGY STANDARD FOR BUILDINGS, ASHRAE/IESNA STANDARD 90.1 (2013)
   See SECO website for State Funded Buildings, New Construction and Major Renovation Requirements and SECO Compliance Certification Forms
2. WATER CONSERVATION STANDARDS FOR STATE BUILDINGS - Energy Conservation Design Standards: Texas Administrative Code, Title 34, Part 1, Ch.19, Subchapter C
   a. COMPLIANCE WITH THE WATER CONSERVATION DESIGN STANDARDS FOR STATE BUILDINGS AND INSTITUTIONS OF HIGHER EDUCATION FACILITIES, STATE ENERGY CONSERVATION OFFICE (SECO), 2016

See SECO website for Texas Water Conservation Design Standards, Requirements and SECO Compliance Certification I Reporting Form

D. ACCESSIBILITY CODE

i. U.S. DEPT. OF JUSTICE, 2010 ADA STANDARDS FOR ACCESSIBLE DESIGN
ii. U.S. DEPT. OF JUSTICE, ARCHITECTURAL BARRIERS ACT, ACCESSIBILITY GUIDELINES FOR OUTDOOR DEVELOPED AREAS ON FEDERAL LANDS, EFFECTIVE NOVEMBER-25-2013
iii. 2012 TEXAS ACCESSIBILITY STANDARDS, ELIMINATION OF ARCHITECTURAL BARRIERS, TEXAS GOVERNMENT CODE, CHAPTER 469

E. PLAYGROUND SAFETY CODE

i. Public Playground Safety Handbook, U.S. Consumer Product Safety Commission.

TEXAS PARKS & WILDLIFE

TEXAS PARKS AND WILDLIFE

INFRASTRUCTURE DIVISION

4200 SMITH SCHOOL ROAD · AUSTIN, TEXAS 78744-3292

CONSTRUCTION DOCUMENTS

RELEASED FOR SOLICITATION

Thea Luong — 7/21/2020
PROJECT MANAGER, INFRASTRUCTURE DIVISION — DATE

Lori Sons — DATE
DESIGN BRANCH HEAD, INFRASTRUCTURE DIVISION

Tim A. Malinovsky — 07/31/2020
PM BRANCH HEAD, INFRASTRUCTURE DIVISION — DATE

07/31/202
DEPUTY DIRECTOR, INFRASTRUCTURE DIVISION — DATE

REGISTERED ARCHITECT · RACHEL L. H. WRIGHT · 20948 · STATE OF TEXAS

SET NO:

CONSTRUCTION DOCUMENTS

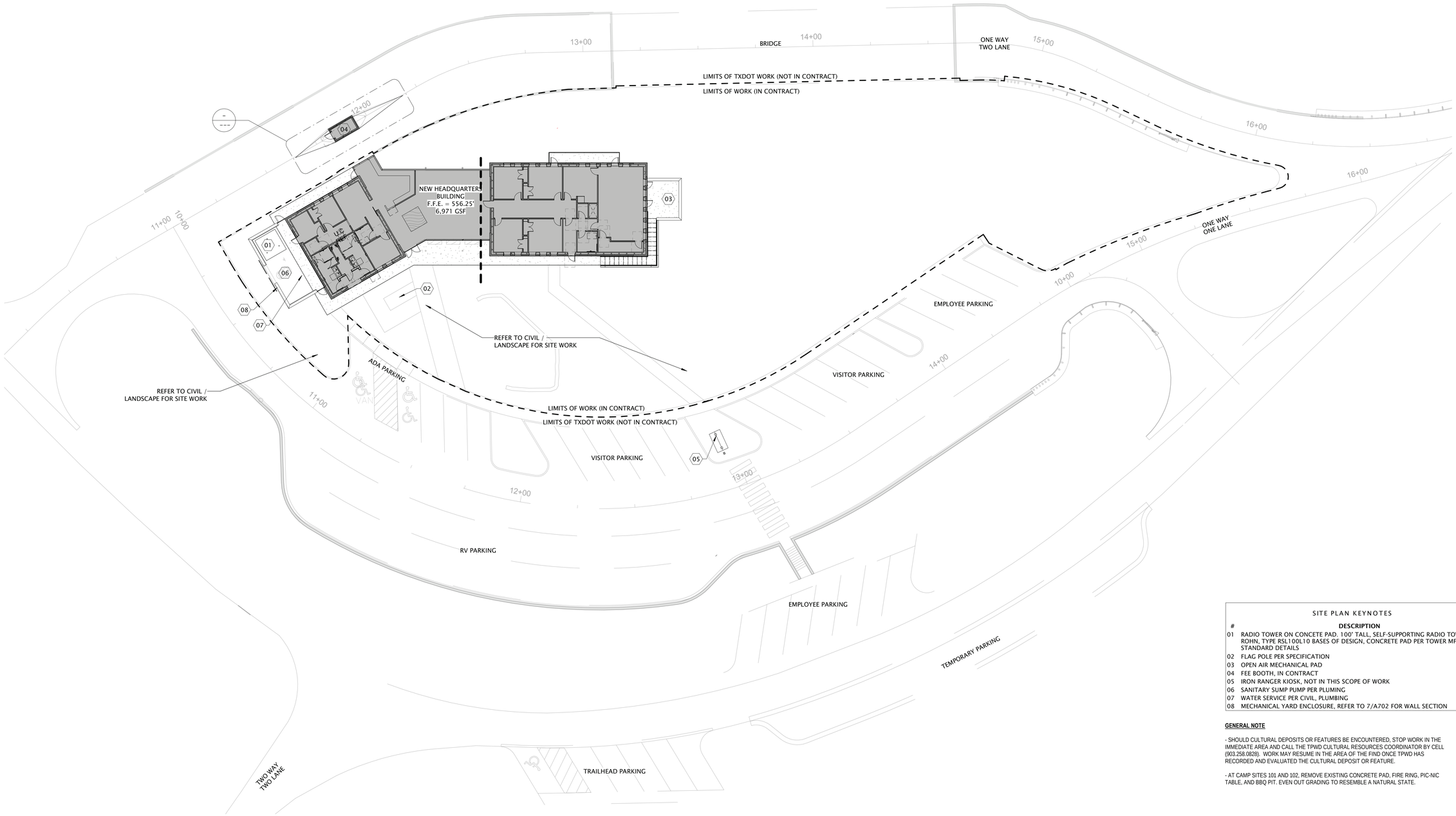

1 SITE PLAN
SCALE: 1" = 20'-0"

TRUE NORTH

PLAN NORTH

SITE PLAN KEYNOTES	
#	DESCRIPTION
01	RADIO TOWER ON CONCETE PAD. 100' TALL, SELF-SUPPORTING RADIO TOWER BY ROHN, TYPE RSL100L10 BASES OF DESIGN, CONCRETE PAD PER TOWER MFR. STANDARD DETAILS
02	FLAG POLE PER SPECIFICATION
03	OPEN AIR MECHANICAL PAD
04	FEE BOOTH, IN CONTRACT
05	IRON RANGER KIOSK, NOT IN THIS SCOPE OF WORK
06	SANITARY SUMP PUMP PER PLUMING
07	WATER SERVICE PER CIVIL, PLUMBING
08	MECHANICAL YARD ENCLOSURE, REFER TO 7/A702 FOR WALL SECTION

GENERAL NOTE

- SHOULD CULTURAL DEPOSITS OR FEATURES BE ENCOUNTERED, STOP WORK IN THE IMMEDIATE AREA AND CALL THE TPWD CULTURAL RESOURCES COORDINATOR BY CELL (903.258.0828). WORK MAY RESUME IN THE AREA OF THE FIND ONCE TPWD HAS RECORDED AND EVALUATED THE CULTURAL DEPOSIT OR FEATURE.

- AT CAMP SITES 101 AND 102, REMOVE EXISTING CONCRETE PAD, FIRE RING, PIC-NIC TABLE, AND BBQ PIT. EVEN OUT GRADING TO RESEMBLE A NATURAL STATE.

TEXAS PARKS & WILDLIFE

FORD POWELL &CARSON
Architects & Planners, Inc.
Architecture
Planning
Preservation
Interior Design
1138 East Commerce Street
San Antonio, Texas 78205
210/226-1246
FPC# 92705

REGISTERED ARCHITECT
RACHEL L. H. WRIGHT
20940
STATE OF TEXAS

TYLER STATE PARK
HEADQUARTERS REPLACEMENT PHASE 1
PROJECT NUMBER: 112741

DATE: 07/03/2020
DESIGNED BY: SG/RW
DRAWN BY: EK
REVIEWED BY: SG/RW

no.	revision	date

SHEET TITLE
SITE PLAN

SHEET NUMBER
A101

CONSTRUCTION DOCUMENTS

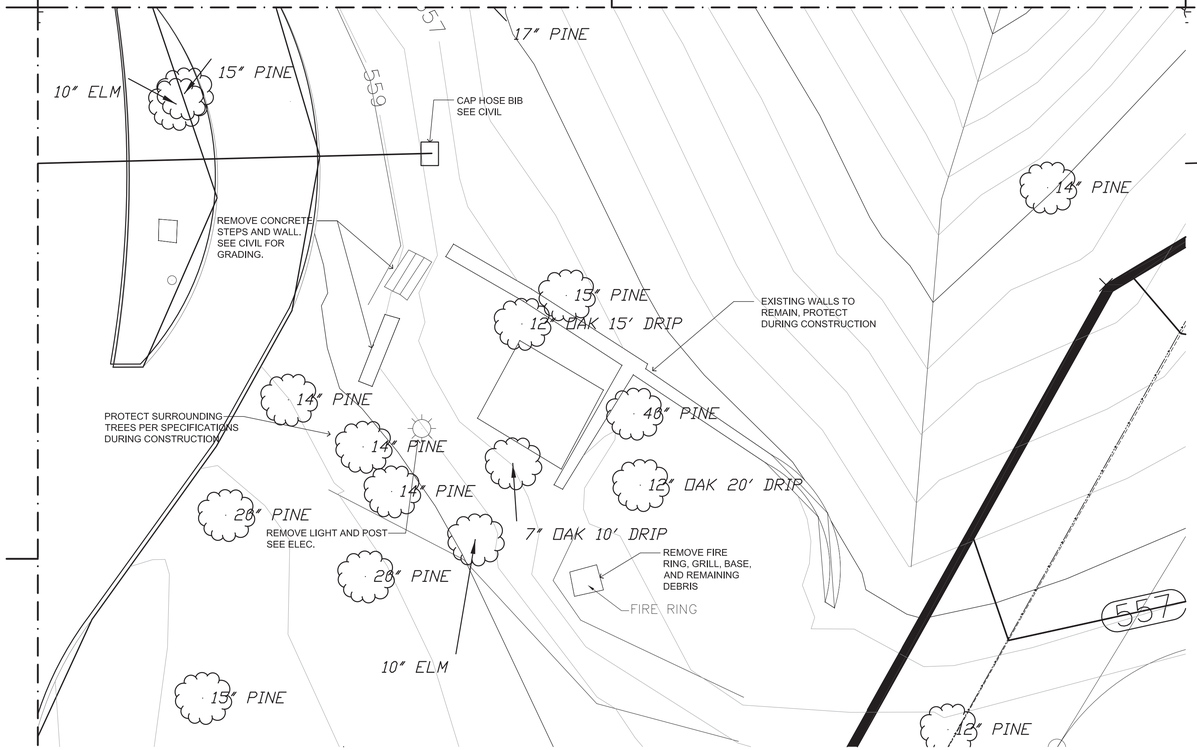

1 CAMPSITE 101 - DEMOLITION PLAN
SCALE: 1/4" = 1'-0"

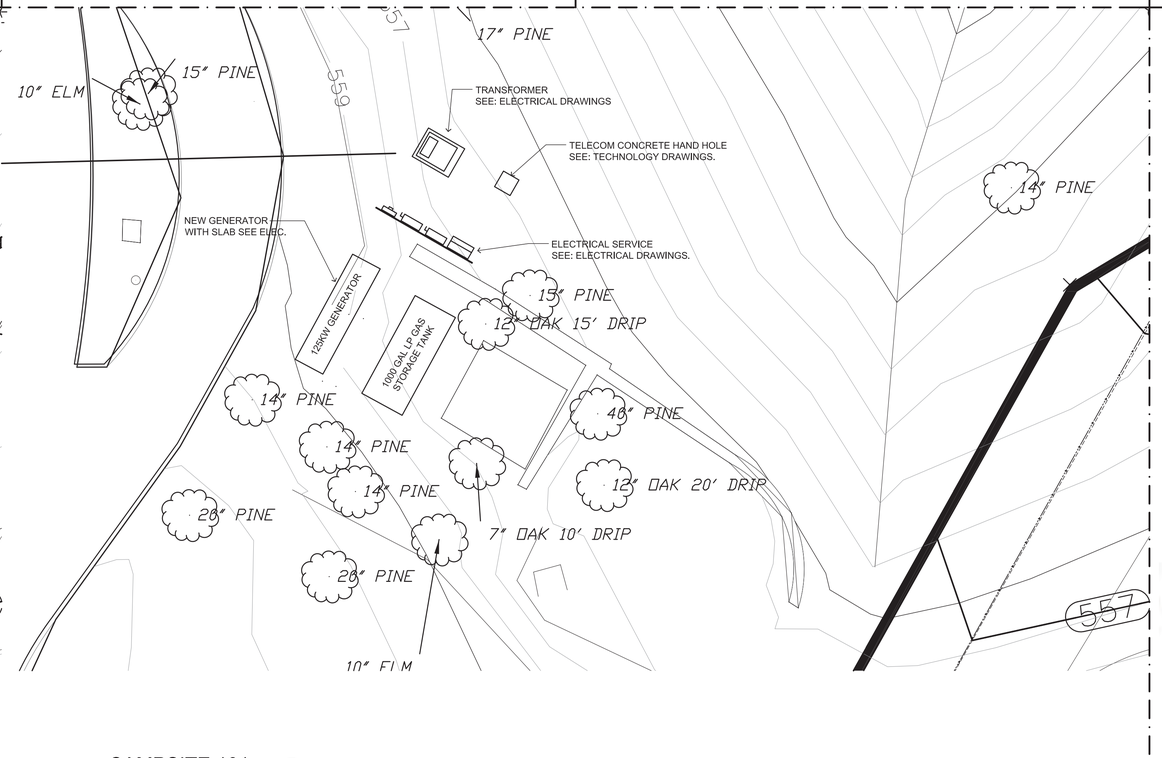

2 CAMPSITE 101
SCALE: 1/4" = 1'-0"

GENERAL NOTES:

GENERAL NOTES:

1. NO TREES ARE TO BE DAMAGED IN THE THE SCOPE OF THE CAMPSITE WORK.
2. PROVIDE TREE PROTECTION FOR SURROUNDING TREES IN THE AREA OF CONSTRUCTION.
3. REMOVE FIRE RING, GRILL AND BASE, AND REMAINING DEBRIS.
4. RETURN METAL FIRE RING COMPONENTS BACK TO TPWD.
5. REMOVE CONCRETE SACK WALL & STEPS WHERE NOTED ON DRAWINGS.
6. CONTRACTOR IS RESPONSIBLE FOR HAULING OFF CONSTRUCTION & DEMOLITION DEBRIS.
7. SEE ELECTRICAL DRAWINGS FOR TERMINATION OF CAMPSITE LIGHTING.
8. SEE ELECTRICAL FOR GENERATOR AND UNDERGROUND LP TANK INSTALLATION.
9. SEE CIVIL DRAWINGS FOR REGRADING OF THE SITE IN PREPARATION FOR GENERATOR AND UNDERGROUND LP TANK.

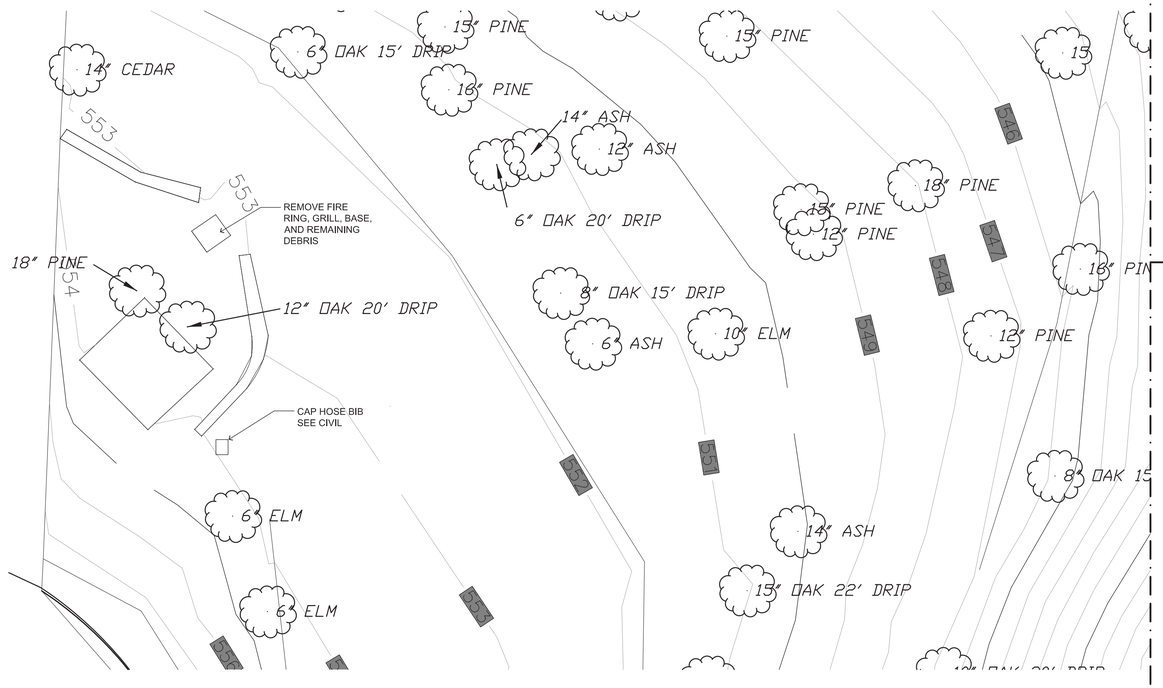

3 CAMPSITE 102
SCALE: 1/4" = 1'-0"

TEXAS PARKS & WILDLIFE

FORD POWELL &CARSON
Architects & Planners, Inc.
Architecture
Planning
Preservation
Interior Design
1138 East Commerce Street
San Antonio, Texas 78205
210/226-1246
FPC# 92705

REGISTERED ARCHITECT
RACHEL L. H. WRIGHT
20948
STATE OF TEXAS

Rachel Wright

TYLER STATE PARK
HEADQUARTERS PHASE 1
PROJECT NUMBER: 112741

DATE: 07/03/2020
DESIGNED BY: JK
DRAWN BY: JK
REVIEWED BY: RW

no.	revision	date

SHEET TITLE
CAMPSITE 101 & 102
DEMOLITION & SITE
PLAN

SHEET NUMBER
A102

CONSTRUCTION DOCUMENTS

FLOOR PLAN KEYNOTES

#	DESCRIPTION
01	SCALE MODEL DISPLAY, BY OWNER
02	BENCHES PER LANDSCAPE
03	BUILT-IN COUNTERTOPS FROM SITE-RECLAIMED PINE, WITH BUILT-IN CASEWORK BELOW.
04	TICKET WINDOW
05	FLOOR DRAIN PER PLUMB
06	BUILT-IN CASEWORK W/ TV ABV.
07	AT-GRADE, STAFF ACCESS TO ADJACENT ROAD
08	FURRING WALL @ SPANDREL GLAZING BELOW WORK TOP
10	COPIER, BY OWNER
11	SLIDE GATE / REF. ELEV 8/A302
12	SWING GATE

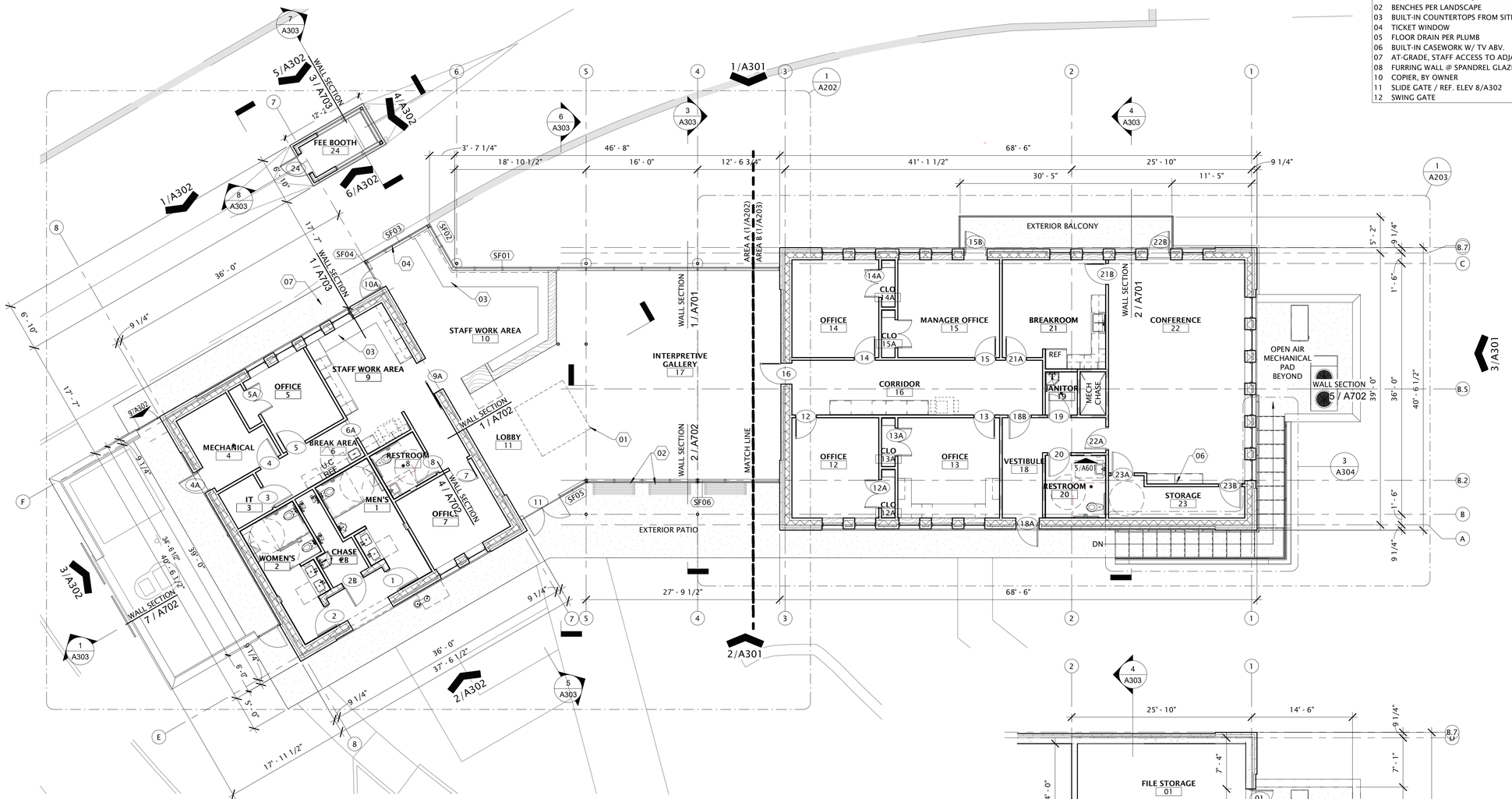

1 FIRST FLOOR OVERALL
SCALE: 1/8" = 1'-0"

TRUE NORTH PLAN NORTH

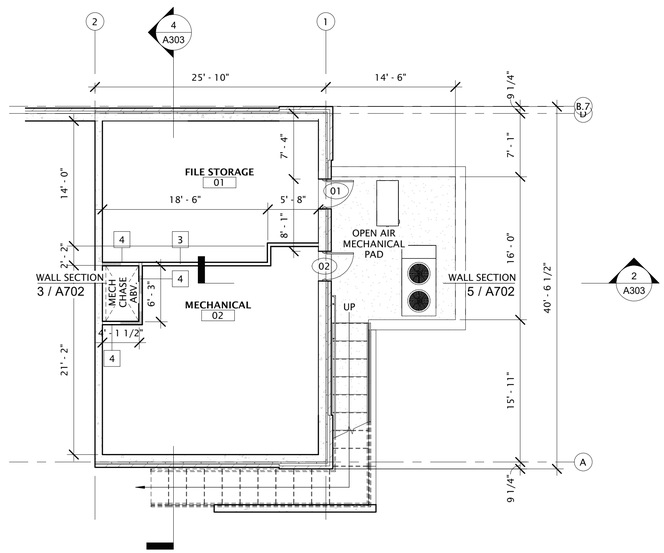

2 BASEMENT
SCALE: 1/8" = 1'-0"

TRUE NORTH PLAN NORTH

TEXAS PARKS & WILDLIFE

FORD POWELL &CARSON
Architects & Planners, Inc.
Architecture
Planning
Preservation
Interior Design
1138 East Commerce Street
San Antonio, Texas 78205
210/226-1246
FPC# 92705

REGISTERED ARCHITECT
RACHEL L. H. WRIGHT
20948
STATE OF TEXAS

TYLER STATE PARK
HEADQUARTERS REPLACEMENT PHASE 1
PROJECT NUMBER: 112741

CONSTRUCTION DOCUMENTS

DATE: 07/03/2020
DESIGNED BY: Designer
DRAWN BY: EK
REVIEWED BY: SG/RW

no.	revision	date

SHEET TITLE
FLOOR PLANS

SHEET NUMBER
A201

FLOOR PLAN KEYNOTES

#	DESCRIPTION
01	SCALE MODEL DISPLAY, BY OWNER
02	BENCHES PER LANDSCAPE
03	BUILT-IN COUNTERTOPS FROM SITE-RECLAIMED PINE, WITH BUILT-IN CASEWORK BELOW.
04	TICKET WINDOW
05	FLOOR DRAIN PER PLUMB
06	BUILT-IN CASEWORK W/ TV ABV.
07	AT-GRADE, STAFF ACCESS TO ADJACENT ROAD
08	FURRING WALL @ SPANDREL GLAZING BELOW WORK TOP
10	COPIER, BY OWNER
11	SLIDE GATE / REF. ELEV 8/A302
12	SWING GATE

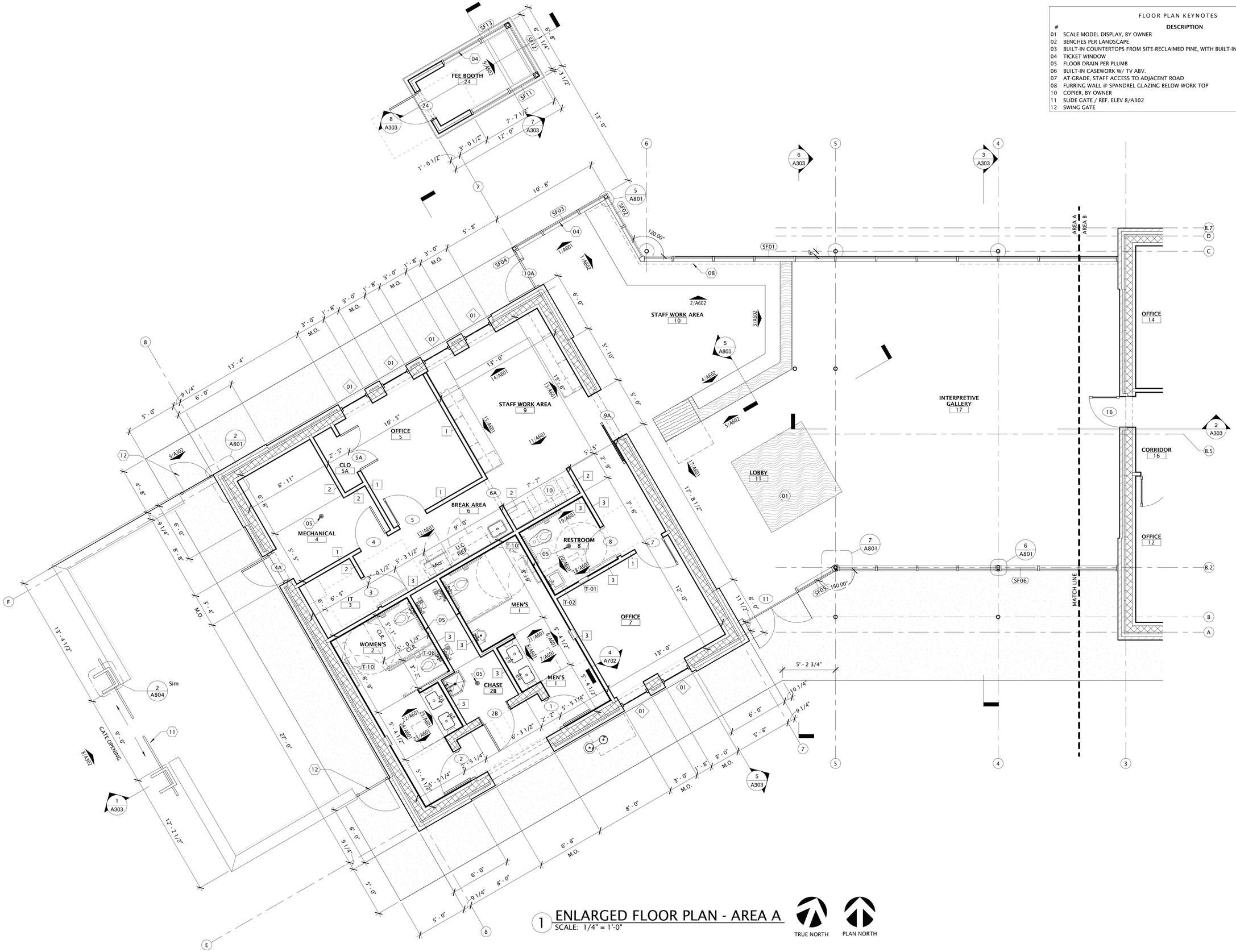

1 ENLARGED FLOOR PLAN - AREA A
SCALE: 1/4" = 1'-0"

TRUE NORTH PLAN NORTH

TEXAS PARKS & WILDLIFE

FORD POWELL &CARSON
Architects & Planners, Inc.
Architecture
Planning
Preservation
Interior Design
1138 East Commerce Street
San Antonio, Texas 78205
210/226-1246
FPC# 92705

REGISTERED ARCHITECT RACHEL L. H. WRIGHT 20948 STATE OF TEXAS

TYLER STATE PARK

HEADQUARTERS REPLACEMENT PHASE 1

PROJECT NUMBER: 112741

DATE: 07/03/2020
DESIGNED BY: Designer
DRAWN BY: EK
REVIEWED BY: SG/RW

no.	revision	date

SHEET TITLE
ENLARGD FLOOR PLAN - AREA A

SHEET NUMBER
A202

CONSTRUCTION DOCUMENTS

FLOOR PLAN KEYNOTES

#	DESCRIPTION
01	SCALE MODEL DISPLAY, BY OWNER
02	BENCHES PER LANDSCAPE
03	BUILT-IN COUNTERTOPS FROM SITE-RECLAIMED PINE, WITH BUILT-IN CASEWORK BELOW.
04	TICKET WINDOW
05	FLOOR DRAIN PER PLUMB
06	BUILT-IN CASEWORK W/ TV ABV.
07	AT-GRADE, STAFF ACCESS TO ADJACENT ROAD
08	FURRING WALL @ SPANDREL GLAZING BELOW WORK TOP
10	COPIER, BY OWNER
11	SLIDE GATE / REF. ELEV 8/A302
12	SWING GATE

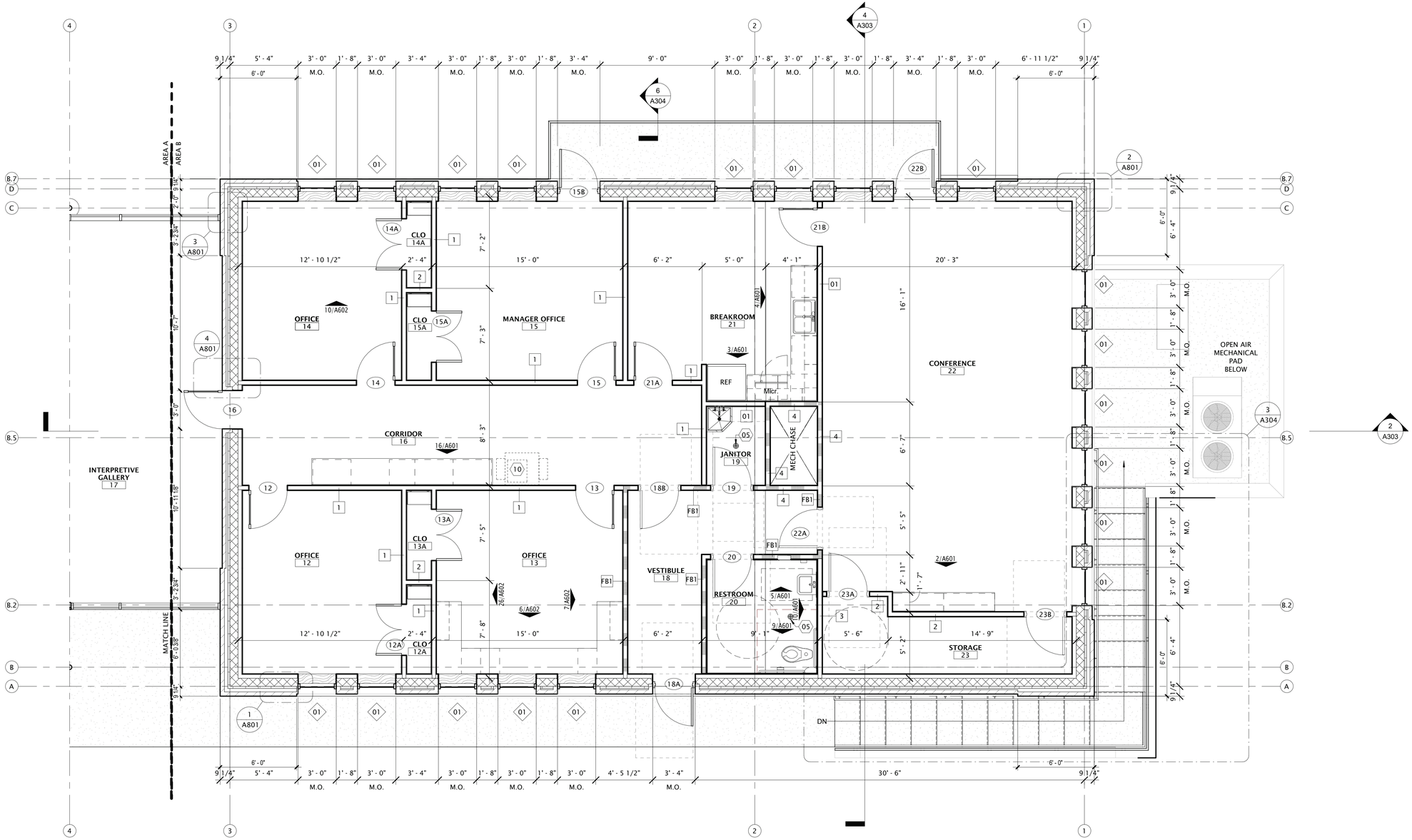

1 ENLARGED FLOOR PLAN - AREA B

SCALE: 1/4" = 1'-0"

TRUE NORTH PLAN NORTH

TEXAS PARKS & WILDLIFE

FORD POWELL &CARSON
Architects & Planners, Inc.
Architecture
Planning
Preservation
Interior Design
1138 East Commerce Street
San Antonio, Texas 78205
210/226-1246
FPC# 92705

REGISTERED ARCHITECT RACHEL L. H. WRIGHT 20948 STATE OF TEXAS

TYLER STATE PARK
HEADQUARTERS REPLACEMENT PHASE 1
PROJECT NUMBER: 112741

DATE: 07/03/2020
DESIGNED BY: Designer
DRAWN BY: EK
REVIEWED BY: SG/RW

no.	revision	date

SHEET TITLE
ENLARGED FLOOR PLAN -AREA B

SHEET NUMBER
A203

CONSTRUCTION DOCUMENTS

ROOF KEYNOTES

#	DESCRIPTION
01	METAL SHINGLE ROOF
02	ROOF MOUNTED WATER DIVERTER, COORDINATE LOCATIONS W/ DOORS
03	RAIN HANDLER SYSTEM (BASIS OF DESIGN)
04	STANDING SEAM MTL ROOF

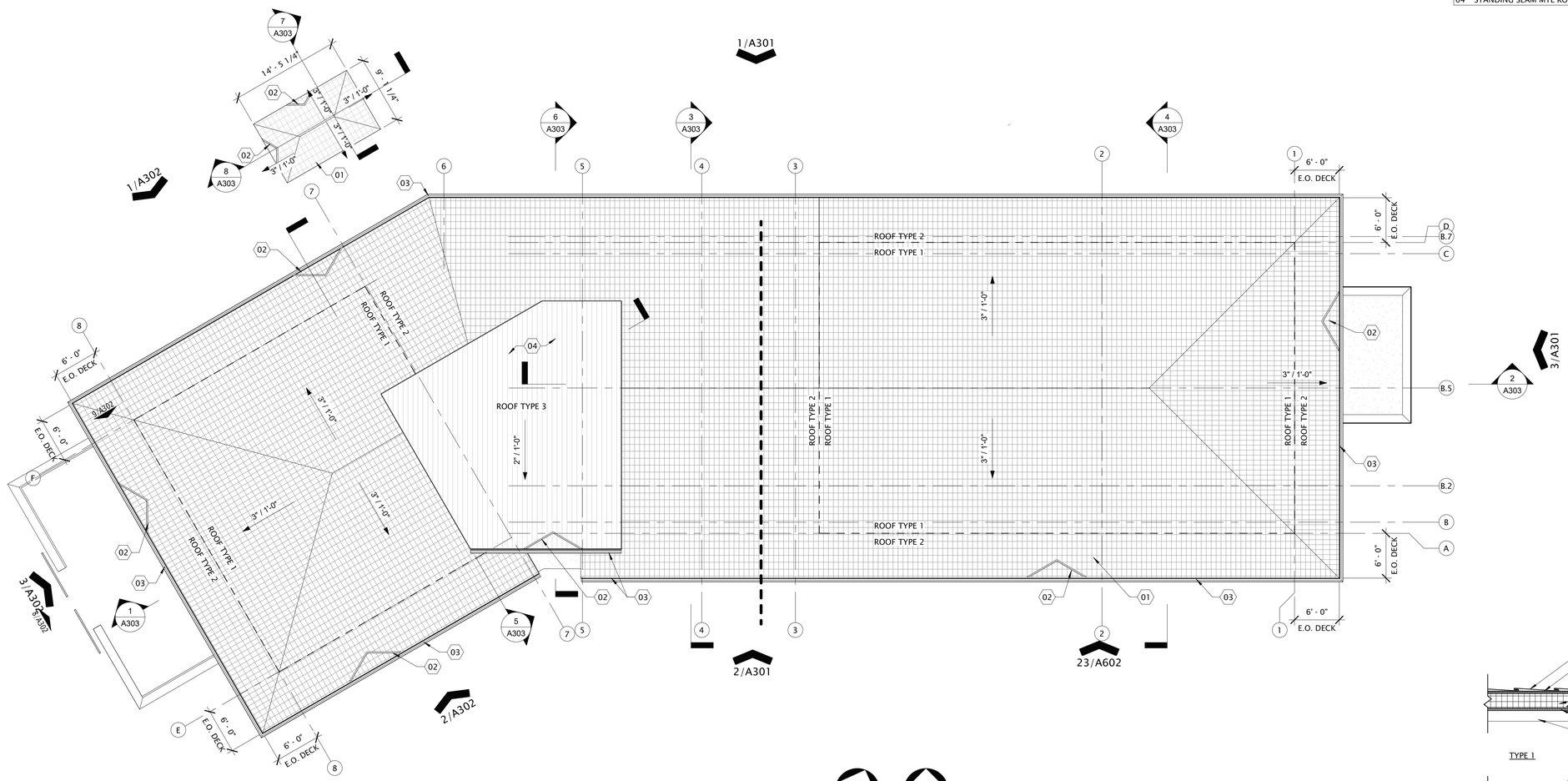

1 ROOF PLAN
SCALE: 1/8" = 1'-0"

TRUE NORTH PLAN NORTH

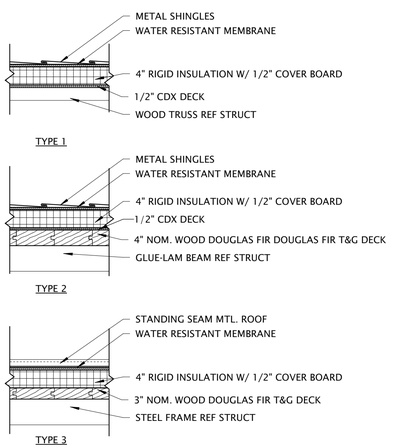

2 ROOF TYPES
3/4" = 1'-0"

TEXAS PARKS & WILDLIFE

FORD POWELL &CARSON
Architects & Planners, Inc.
Architecture
Planning
Preservation
Interior Design
1138 East Commerce Street
San Antonio, Texas 78205
210/226-1246
FPC# 92705

REGISTERED ARCHITECT
RACHEL L. H. WRIGHT
20948
STATE OF TEXAS

TYLER STATE PARK
HEADQUARTERS REPLACEMENT PHASE 1
PROJECT NUMBER: 112741

DATE: 07/03/2020
DESIGNED BY: Designer
DRAWN BY: EK
REVIEWED BY: SG/RW

no.	revision	date

SHEET TITLE
ROOF PLAN

SHEET NUMBER
A204

CONSTRUCTION DOCUMENTS

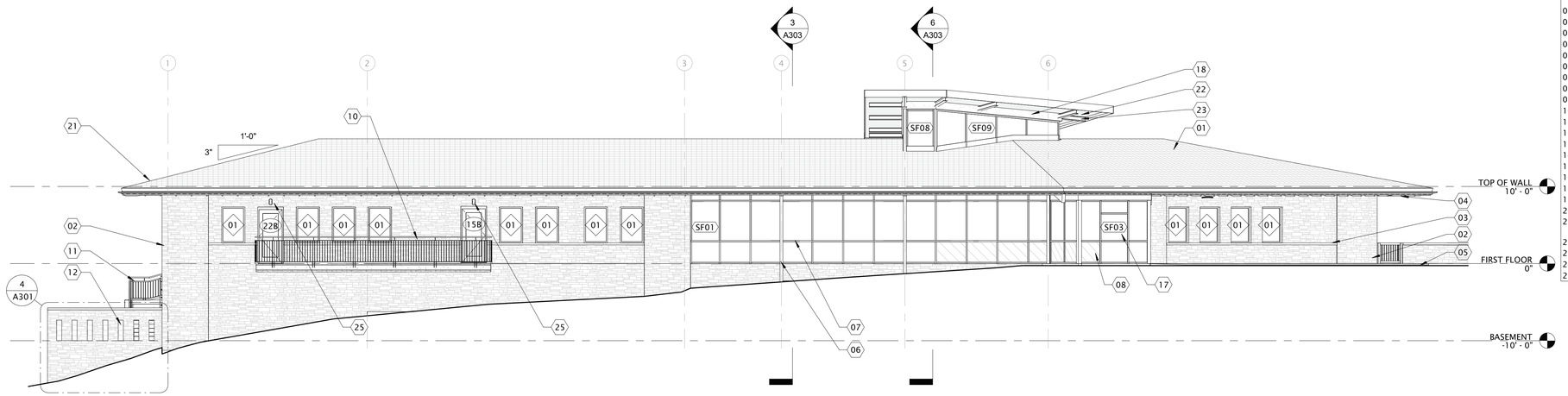

1 NORTH ELEVATION
1/8" = 1'-0"

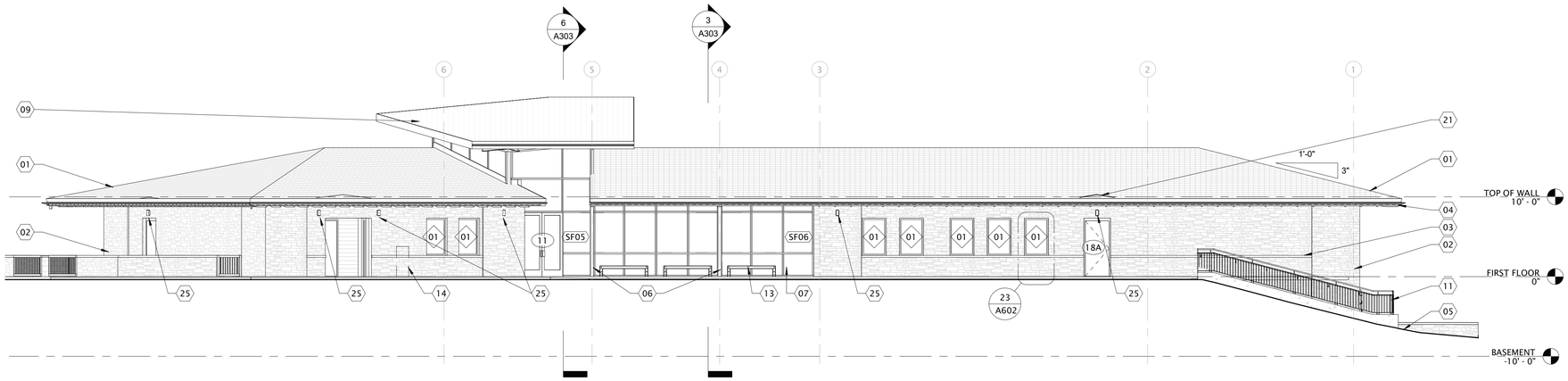

2 SOUTH ELEVATION
1/8" = 1'-0"

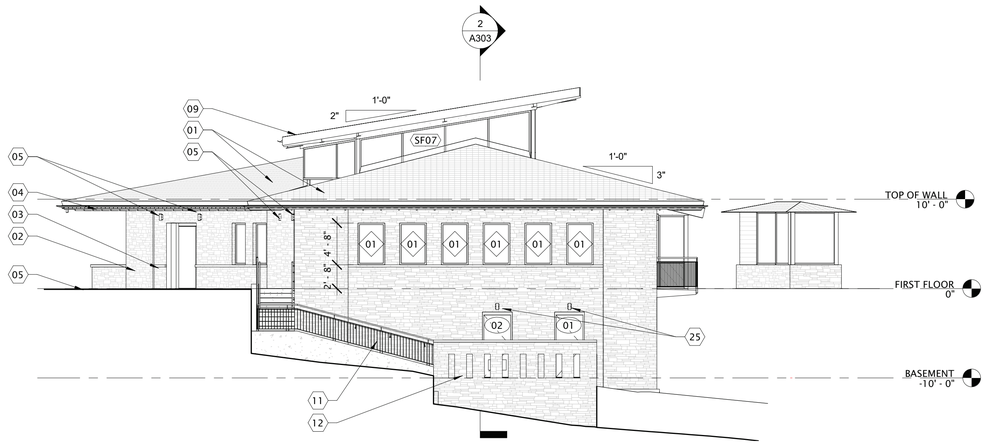

3 EAST ELEVATION
1/8" = 1'-0"

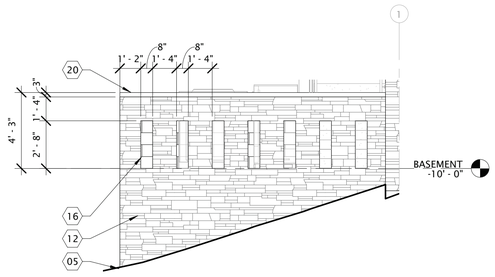

4 ELEVATION DETAIL @ OPEN AIR SCREEN WALL
1/4" = 1'-0"

ELEVATION KEYNOTES

#	DESCRIPTION
01	METAL SHINGLE ROOF W/ RAIN HANDLER SYSTEM (BASIS OF DESIGN)
02	STONE VENEER
03	CAST STONE SILL
04	EXPOSED WOOD RAFTER TAIL / STAIN
05	FINISHED GRADE / REF TO CIVIL
06	EXPOSED STL COLUMN / PAINT
07	ALUM FRAMED WINDOW SYSTEM AS SCHED
08	SPANDREL GLAZING TYP
09	STANDING SEAM MTL ROOF
10	STEEI GUARDRAILS, TYP.
11	MTL GUARDRAIL W/ PAINTED MTL. HANDRAILS
12	STONE VENEER SCREEN WALL @ OPEN AIR MECHANICAL
13	BENCHES REF. LANDSCAPE
14	DRINKING FOUNTAIN REF PLUMB (MDF BASIS OF DESIGN)
15	PAINTED STEEL SLIDING GATE
16	OPENING IN STONE VENEER FOR MECHANICAL VENTILATION
17	TICKET WINDOW IN ALUM FRAMED WINDOW SYSTEM
18	FIBER CEMENT SIDING PER SPEC
20	CAST STONE COPING CAP
21	ROOF MOUNTED WATER DIVERTER, COORDINATE LOCATIONS W/ DOORS (SEE 1/A204)
22	TNG SOFFIT, STAIN
23	EXPOSED STL BEAM / PAINT
24	PAINTED STEEL GATE
25	EXTERIOR LIGHT FIXTURE, REF. TO ELEC.

TEXAS PARKS & WILDLIFE

FORD POWELL &CARSON
Architects & Planners, Inc.
Architecture
Planning
Preservation
Interior Design
1138 East Commerce Street
San Antonio, Texas 78205
210/226-1246
FPC# 92705

REGISTERED ARCHITECT
RACHEL L. H. WRIGHT
20948
STATE OF TEXAS
Rachel Wright

TYLER STATE PARK
HEADQUARTERS REPLACEMENT PHASE 1
PROJECT NUMBER: 112741

DATE: 07/03/2020
DESIGNED BY: Designer
DRAWN BY: EK
REVIEWED BY: SG/RW

no.	revision	date

SHEET TITLE
BUILDING ELEVATIONS

SHEET NUMBER
A301

CONSTRUCTION DOCUMENTS

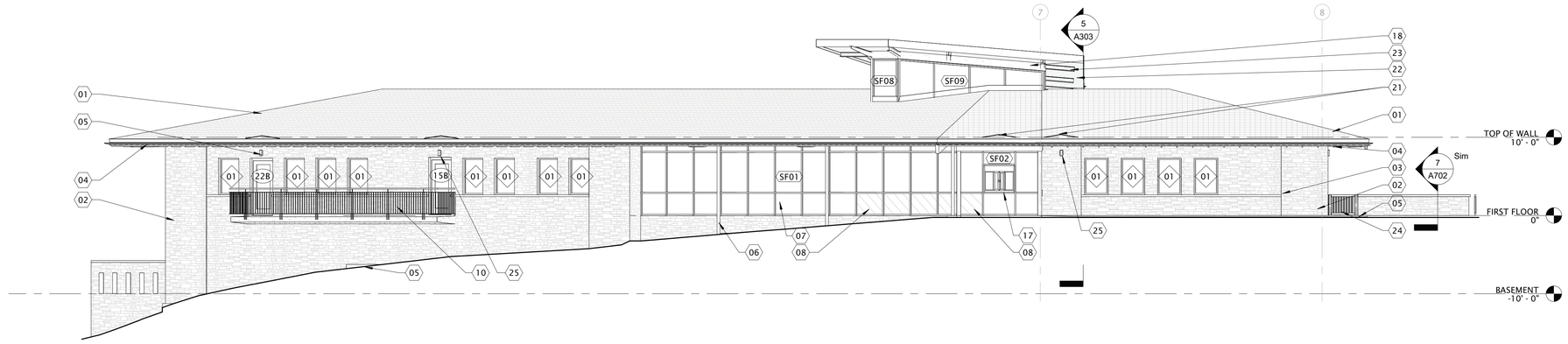

1 NORTHWEST ELEVATION
1/8" = 1'-0"

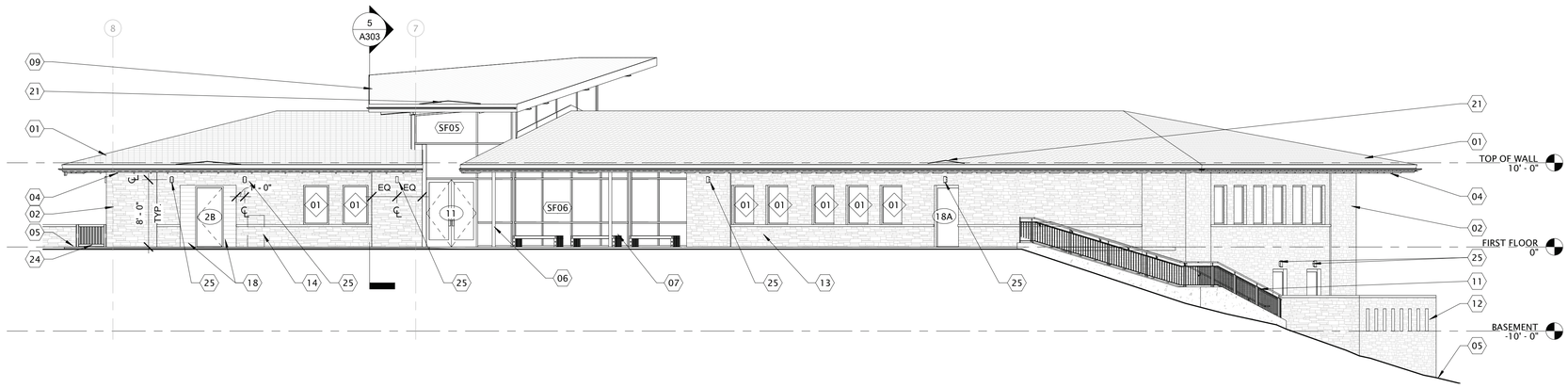

2 SOUTHEAST ELEVATION
1/8" = 1'-0"

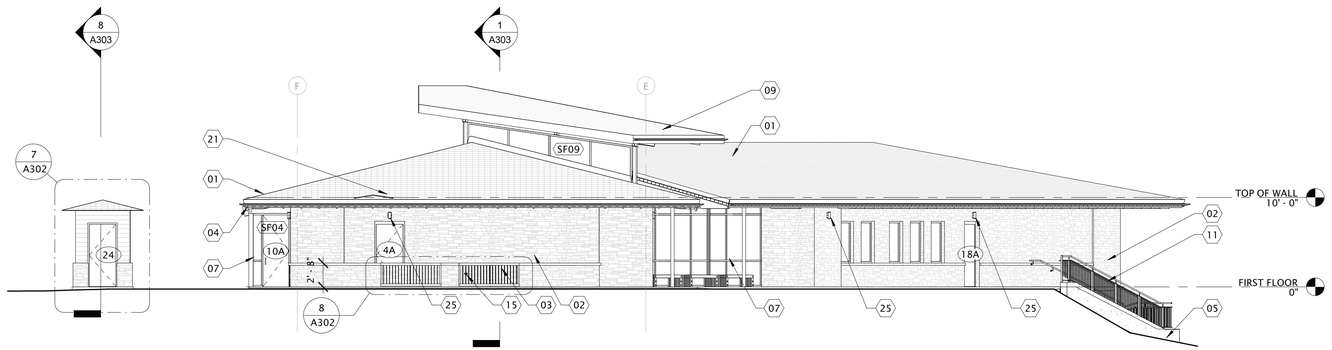

3 SOUTHWEST ELEVATION
1/8" = 1'-0"

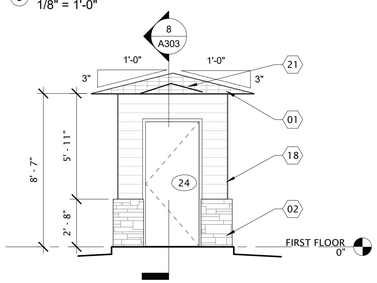

7 ELEVATION DETAIL @ SW FEE BOOTH
1/4" = 1'-0"

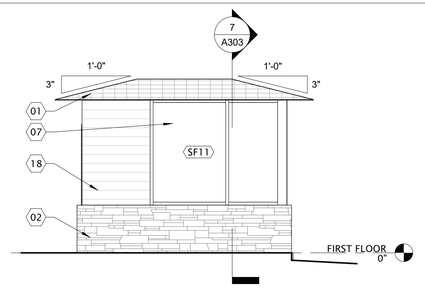

6 SE ELEVATION - FEE BOOTH
1/4" = 1'-0"

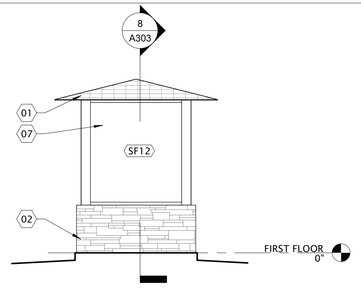

4 NE ELEVATION - FEE BOOTH
1/4" = 1'-0"

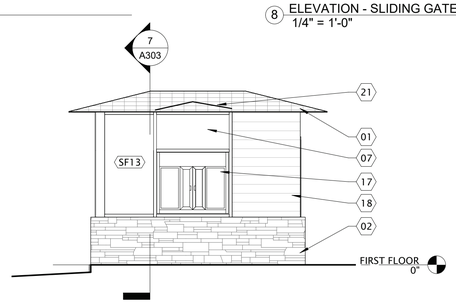

5 NW ELEVATION - FEE BOOTH
1/4" = 1'-0"

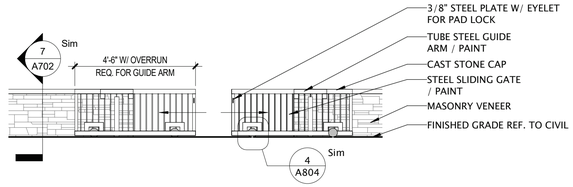

8 ELEVATION - SLIDING GATE
1/4" = 1'-0"

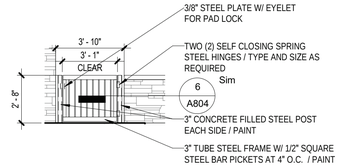

9 ELEVATION - SWING GATE
1/4" = 1'-0"

ELEVATION KEYNOTES

#	DESCRIPTION
01	METAL SHINGLE ROOF W/ RAIN HANDLER SYSTEM (BASIS OF DESIGN)
02	STONE VENEER
03	CAST STONE SILL
04	EXPOSED WOOD RAFTER TAIL / STAIN
05	FINISHED GRADE / REF TO CIVIL
06	EXPOSED STL COLUMN / PAINT
07	ALUM FRAMED WINDOW SYSTEM AS SCHED
08	SPANDREL GLAZING TYP
09	STANDING SEAM MTL ROOF
10	STEEI GUARDRAILS, TYP.
11	MTL GUARDRAIL W/ PAINTED MTL. HANDRAILS
12	STONE VENEER SCREEN WALL @ OPEN AIR MECHANICAL
13	BENCHES REF. LANDSCAPE
14	DRINKING FOUNTAIN REF PLUMB (MDF BASIS OF DESIGN)
15	PAINTED STEEL SLIDING GATE
16	OPENING IN STONE VENEER FOR MECHANICAL VENTILATION
17	TICKET WINDOW IN ALUM FRAMED WINDOW SYSTEM
18	FIBER CEMENT SIDING PER SPEC
20	CAST STONE COPING CAP
21	ROOF MOUNTED WATER DIVERTER, COORDINATE LOCATIONS W/ DOORS (SEE 1/A204)
22	TNG SOFFIT, STAIN
23	EXPOSED STL BEAM / PAINT
24	PAINTED STEEL GATE
25	EXTERIOR LIGHT FIXTURE, REF. TO ELEC.

TEXAS PARKS & WILDLIFE

FORD POWELL & CARSON
Architects & Planners, Inc.
Architecture
Planning
Preservation
Interior Design
1138 East Commerce Street
San Antonio, Texas 78205
210/226-1246
FPC# 92705

REGISTERED ARCHITECT
RACHEL L. H. WRIGHT
20948
STATE OF TEXAS

TYLER STATE PARK
HEADQUARTERS REPLACEMENT PHASE 1
PROJECT NUMBER: 112741

DATE: 07/03/2020
DESIGNED BY: Designer
DRAWN BY: EK
REVIEWED BY: SG/RW

no.	revision	date

SHEET TITLE
BUILDING ELEVATIONS

SHEET NUMBER
A302

CONSTRUCTION DOCUMENTS

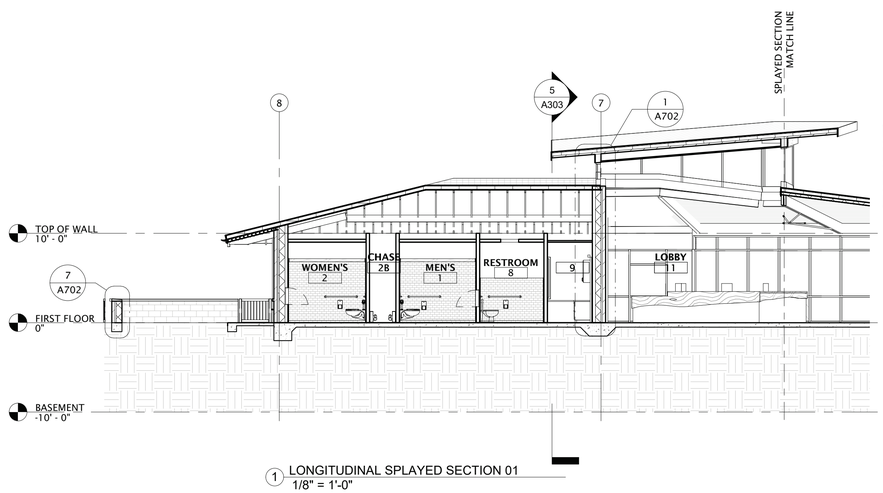

1 LONGITUDINAL SPLAYED SECTION 01
1/8" = 1'-0"

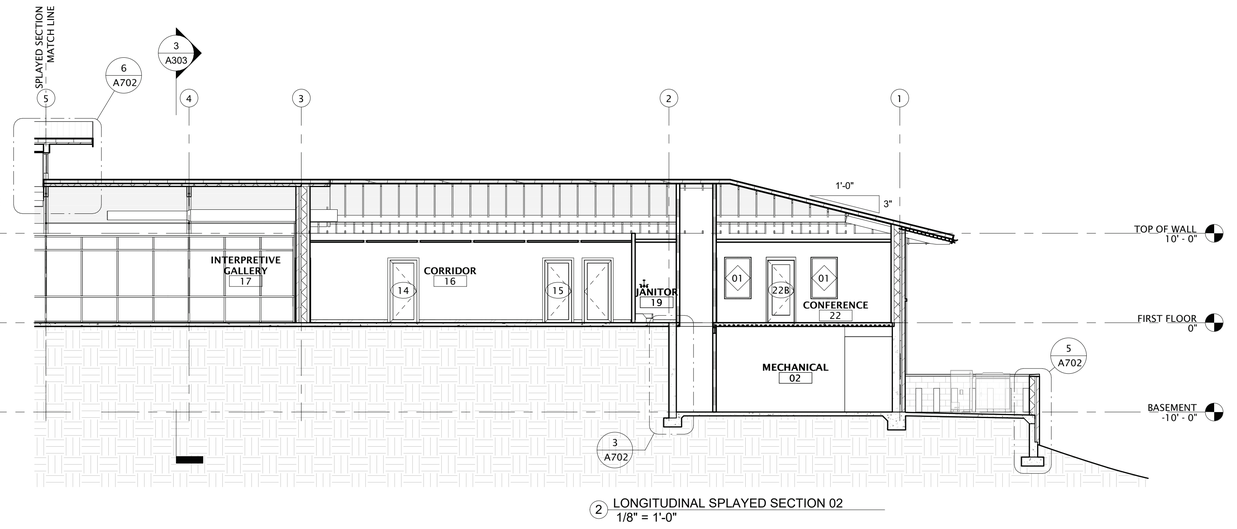

2 LONGITUDINAL SPLAYED SECTION 02
1/8" = 1'-0"

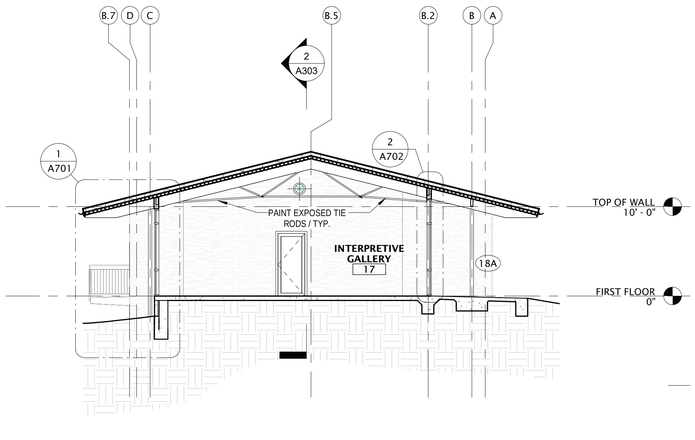

3 TRANSVERSE SECTION @ GALLERY
1/8" = 1'-0"

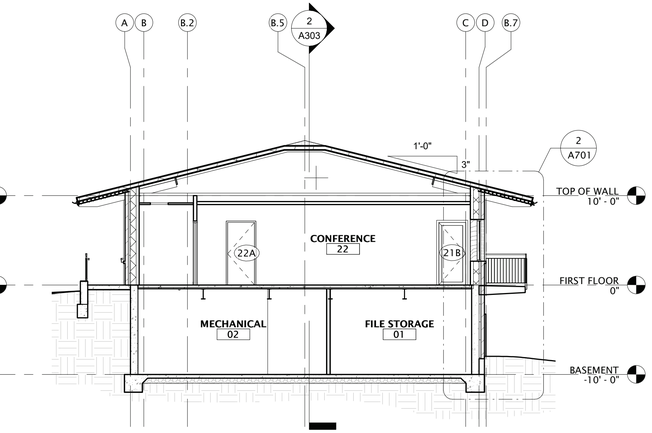

4 TRANSVERSE SECTION @ CONFERENCE / MECH
1/8" = 1'-0"

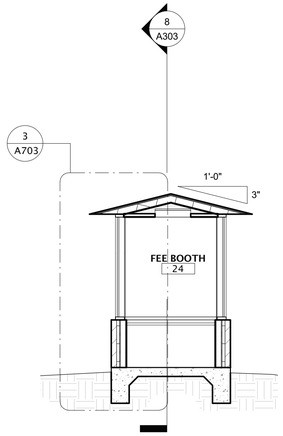

7 TRANSVERSE SECTION @ FEE BOOTH
1/4" = 1'-0"

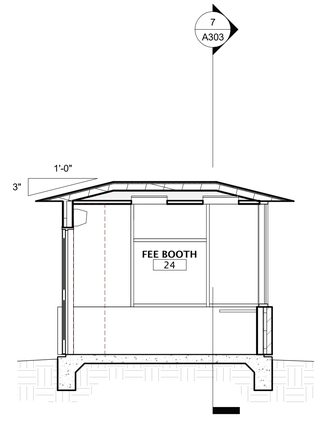

8 LONGITUDINAL SECTION @ FEE BOOTH
1/4" = 1'-0"

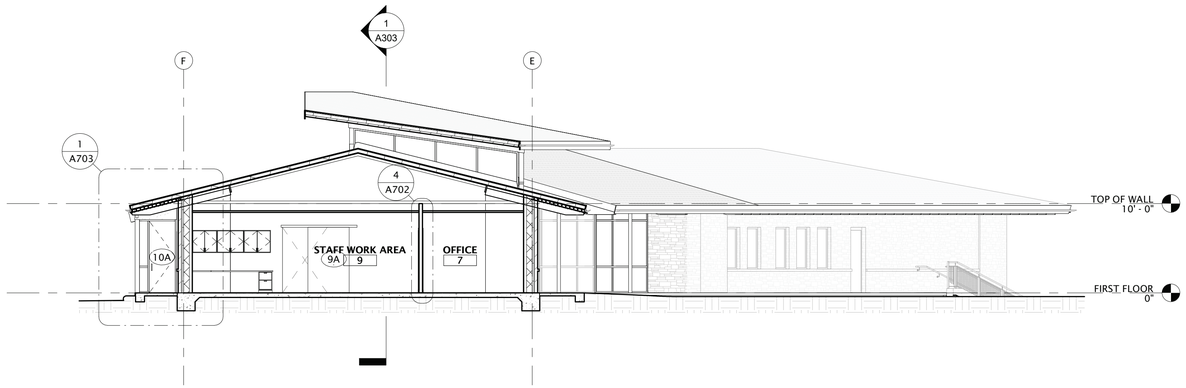

5 TRANSVERSE SECTION @ ADMIN
1/8" = 1'-0"

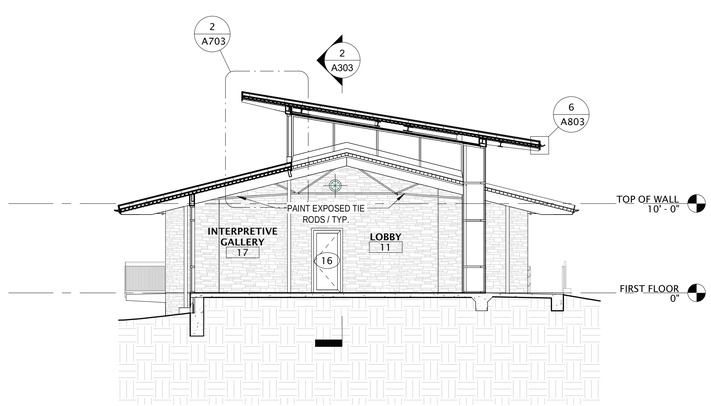

6 CROSS SECTION CLERESTORY
1/8" = 1'-0"

TEXAS PARKS & WILDLIFE

FORD POWELL &CARSON
Architects & Planners, Inc.
Architecture
Planning
Preservation
Interior Design
1138 East Commerce Street
San Antonio, Texas 78205
210/226-1246
FPC# 92705

REGISTERED ARCHITECT
RACHEL L. H. WRIGHT
20948
STATE OF TEXAS

TYLER STATE PARK

HEADQUARTERS REPLACEMENT PHASE 1

PROJECT NUMBER: 112741

DATE: 07/03/2020
DESIGNED BY: Designer
DRAWN BY: EK
REVIEWED BY: SG/RW

no.	revision	date

SHEET TITLE
BUILDING SECTIONS

SHEET NUMBER
A303

CONSTRUCTION DOCUMENTS

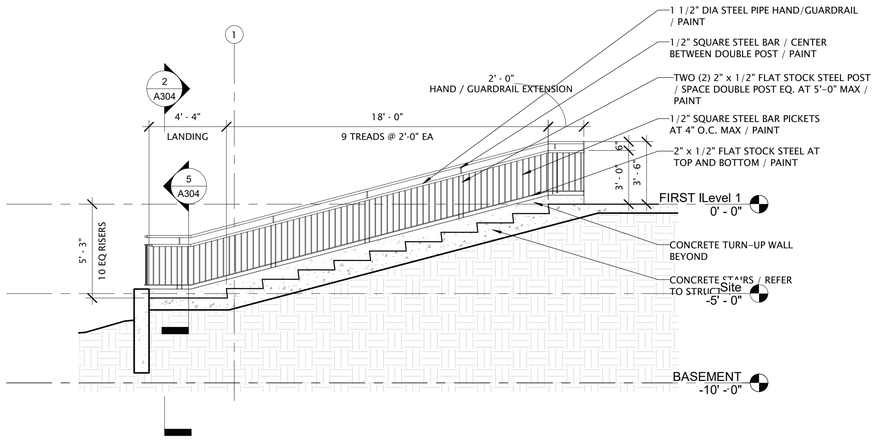

1 STAIR SECTION 01
1/4" = 1'-0"

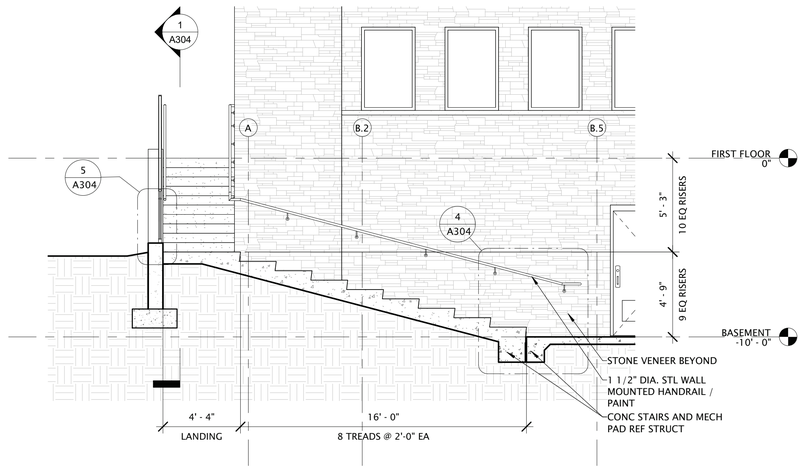

2 STAIR SECTION 02
1/4" = 1'-0"

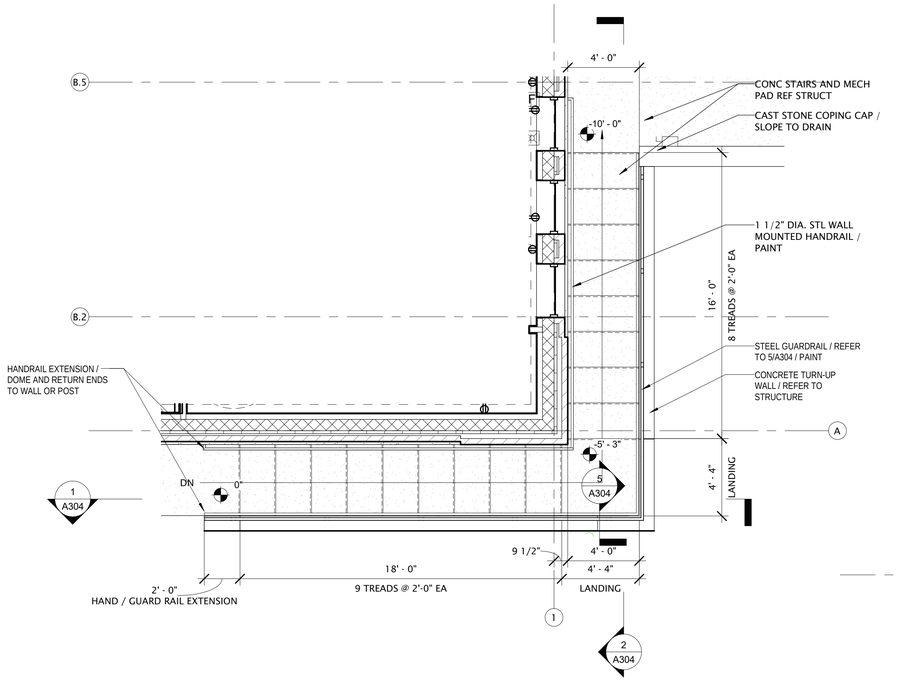

3 ENLARGED FLOOR PLAN - STAIR
1/4" = 1'-0"

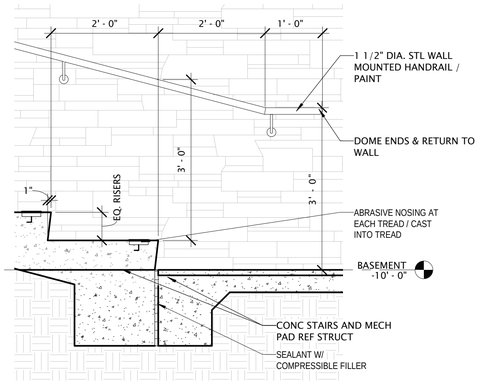

4 STAIR BASE
3/4" = 1'-0"

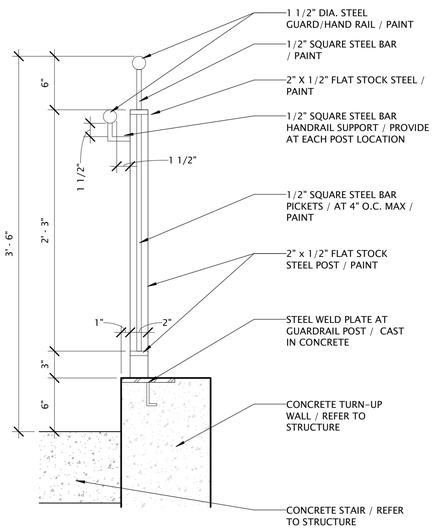

5 GUARDRAIL SECTION @ STAIRS
1 1/2" = 1'-0"

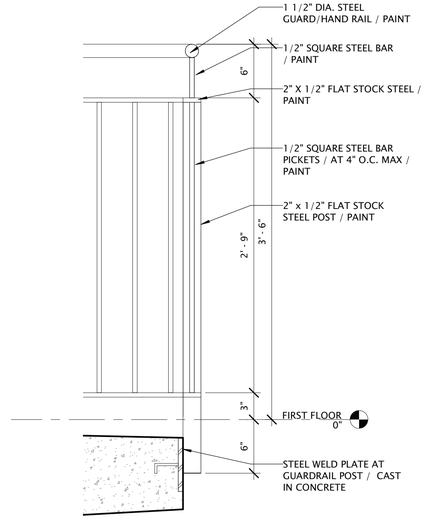

6 GUARDRAIL SECTION @ PATIO
1 1/2" = 1'-0"

TRUE NORTH

PLAN NORTH

TEXAS PARKS & WILDLIFE

FORD POWELL &CARSON
Architects & Planners, Inc.
Architecture
Planning
Preservation
Interior Design
1138 East Commerce Street
San Antonio, Texas 78205
210/226-1246
FPC# 92705

REGISTERED ARCHITECT
RACHEL L. H. WRIGHT
20948
STATE OF TEXAS

TYLER STATE PARK
HEADQUARTERS REPLACEMENT PHASE 1
PROJECT NUMBER: 112741

DATE: 07/03/2020
DESIGNED BY: Desianer
DRAWN BY: EK
REVIEWED BY: SG/RW

no.	revision	date

SHEET TITLE
STAIR PLAN & SECTIONS

SHEET NUMBER
A304

CONSTRUCTION DOCUMENTS

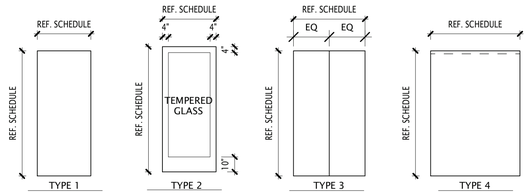

INTERIOR DOORS

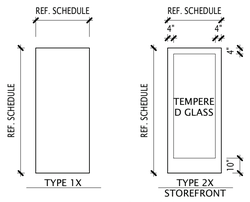

EXTERIOR DOORS

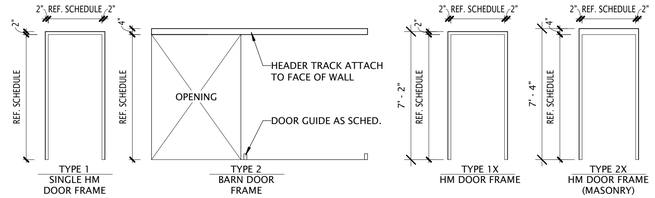

INTERIOR FRAMES EXTERIOR FRAMES

1 DOOR / FRAME TYPES
1/4" = 1'-0"

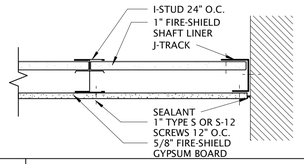

TYPE	STUD	DESIGN NO.
FC1	4"	ICBO- EVALUATION REPORT NO. 3579

1-HOUR HORIZ. FIRE RESISTIVE ASSY

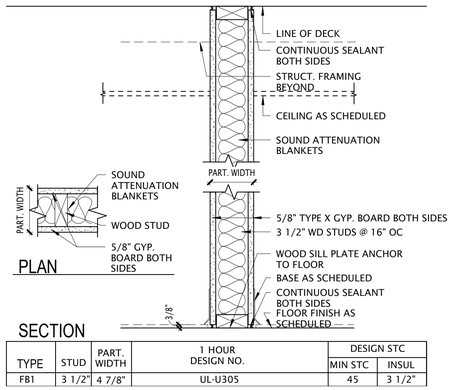

TYPE	STUD	PART. WIDTH	1 HOUR DESIGN NO.	DESIGN STC	
				MIN STC	INSUL
FB1	3 1/2"	4 7/8"	UL-U305	45	3 1/2"

1-HOUR VERT FIRE RESISTIVE ASSY

2 FIRE BARRIER TYPES
1 1/2" = 1'-0"

WINDOW SCHEDULE				
Mark	Width	Height	Sill Height	Comments
01	3' - 0"	4' - 8"	2' - 8"	ALUM WINDOWS PER SPEC

FINISH LEGEND

PAINT
P1 - (TYPICAL) SHERWIN WILLIAMS; WHITE DUCK; SW7008
P2 - (EXPOSED STEEL) SHERWIN WILLIAMS ANONYMOUS; SW 7046
P3- (DOORS) SHERWIN WILLIAMS; FIRED BRICK; SW6335

TILE
TIL-1 - 3"x6" GLAZED CERAMIC; SUCCULENT GREEN; DALTILE RS34
TIL-2 - 3"x6" GLAZED CERAMIC; GARDEN SPOT; DALTILE 0141

QUARTZ
QTZ-1 - VENETIA CREAM; CORIAN
QTZ-2 - DOVE GRAY; CORIAN

PLASTIC LAMINATE
PL-1 - 918058 NEUTRAL WHITE; FORMICA

WOOD
WOOD - (BASE & TRIM) 1x4 DOUGLAS FIR STAINED

DOOR SCHEDULE																
		Door							Frame							
Door #	Door Type	Overall Width	Height	Thickness	Material	Finish	GLASS	Fire Rating	Type	Material	Finish	Jamb	Head	SILL	Comments
01	1X	3' - 0"	7' - 0"	1 3/4"	H.M.	PNT			2X	HM	PNT				
02		3' - 0"	7' - 0"	1 3/4"	H.M.	PNT			2X	HM	PNT				24" X 14" LOUVER
1	1X	3' - 0"	7' - 0"	1 3/4"	H.M.	PNT			1X	HM	PNT				
2	1X	3' - 0"	7' - 0"	1 3/4"	H.M.	PNT			1X	HM	PNT				
2B	1X	3' - 0"	7' - 0"	1 3/4"	H.M.	PNT			1X	HM	PNT				
3	1	3' - 0"	7' - 0"	1 3/4"	S.C. WOOD	PNT			1	HM	PNT				
4	1	3' - 0"	7' - 0"	1 3/4"	S.C. WOOD	PNT			1	HM	PNT				
4A		3' - 0"	7' - 0"	1 3/4"	H.M.	PNT			2X	HM	PNT				24" X 14" LOUVER
5	2	3' - 0"	7' - 0"	1 3/4"	S.C. WOOD	PNT	GLAZED PANEL		1	HM	PNT				
5A	3	4' - 0"	7' - 0"	1 3/4"	S.C. WOOD	PNT			1	HM	PNT				PAIR
6A	-	0' - 0"	0' - 0"	0"	N/A	N/A			1	HM	PNT				CASED OPENING
7	2	3' - 0"	7' - 0"	1 3/4"	S.C. WOOD	PNT	GLAZED PANEL		1	HM	PNT				
8	1	3' - 0"	7' - 0"	1 3/4"	S.C. WOOD	PNT			1	HM	PNT				
9A	4	5' - 0"	7' - 4"	1 3/4"	S.C. WOOD	REF. SPECS			2	STL	PNT				BARN DOOR
10A	2X	2' - 11"	8' - 0 1/2"	1 3/4"	AL	ANODIZED	GLAZED PANEL		SF	AL	ANODIZED				TEMPERED GLASS DOOR IN STOREFRONT, CARD READER
11	2X	5' - 11 1/2"	8' - 0 1/2"	1 3/4"	AL	ANODIZED	GLAZED PANEL	NONE	SF	AL	PNT				TEMPERED GLASS DOOR IN STOREFRONT (PAIR), CARD READER
12	2	3' - 0"	7' - 0"	1 3/4"	S.C. WOOD	PNT	GLAZED PANEL		1	HM	PNT				
12A	3	4' - 0"	7' - 0"	1 3/4"	S.C. WOOD	PNT			1	HM	PNT				PAIR
13	2	3' - 0"	7' - 0"	1 3/4"	S.C. WOOD	PNT	GLAZED PANEL		1	HM	PNT				
13A	3	4' - 0"	7' - 0"	1 3/4"	S.C. WOOD	PNT			1	HM	PNT				PAIR
14	2	3' - 0"	7' - 0"	1 3/4"	S.C. WOOD	PNT	GLAZED PANEL		1	HM	PNT				
14A	3	4' - 0"	7' - 0"	1 3/4"	S.C. WOOD	PNT			1	HM	PNT				PAIR
15	2	3' - 0"	7' - 0"	1 3/4"	S.C. WOOD	PNT	GLAZED PANEL		1	HM	PNT				
15A	3	4' - 0"	7' - 0"	1 3/4"	S.C. WOOD	PNT			1	HM	PNT				PAIR
15B	2X	3' - 0"	7' - 0"	1 3/4"	AL	ANODIZED	GLAZED PANEL		2X	AL	ANODIZED				
16	2	3' - 0"	7' - 0"	1 3/4"	S.C. WOOD	PNT	GLAZED PANEL		1	HM	PNT				FROSTED GLASS, CARD READER
18A	1X	3' - 0"	7' - 0"	1 3/4"	H.M.	PNT		20 MIN	2X	HM	PNT				FIRE RATED W/ AUTO CLOSER, CARD READER
18B	1	3' - 0"	7' - 0"	1 3/4"	H.M.	PNT		20 MIN	1	HM	PNT				FIRE RATED W/ AUTO CLOSER, CARD READER
19	1	3' - 0"	7' - 0"	1 3/4"	S.C. WOOD	PNT		20 MIN	1	HM	PNT				FIRE RATED W/ AUTO CLOSER
20	1	3' - 0"	7' - 0"	1 3/4"	S.C. WOOD	PNT		20 MIN	1	HM	PNT				FIRE RATED W/ AUTO CLOSER
21A	2	3' - 0"	7' - 0"	1 3/4"	S.C. WOOD	PNT	GLAZED PANEL		1	HM	PNT				
21B	2	3' - 0"	7' - 0"	1 3/4"	S.C. WOOD	PNT	GLAZED PANEL		1	HM	PNT				
22A	1	3' - 0"	7' - 0"	1 3/4"	S.C. WOOD	PNT		20 MIN	1	HM	PNT				FIRE RATED W/ AUTO CLOSER
22B	2X	3' - 0"	7' - 0"	1 3/4"	AL	ANODIZED	GLAZED PANEL		2X	AL	ANODIZED				
23A	1	3' - 0"	7' - 0"	1 3/4"	S.C. WOOD	PNT			1	HM	PNT				
23B	1	3' - 0"	7' - 0"	1 3/4"	S.C. WOOD	PNT			1	HM	PNT				
24	1X	3' - 0"	7' - 0"	1 3/4"	H.M.	PNT			1X	HM	PNT				

ROOM SCHEDULE									
				Wall Finish					
NUMBER	NAME	FLOOR FINISH	BASE FINISH	WALL NORTH	WALL SOUTH	WALL EAST	WALL WEST	CEILING FINISH	Comments
1	MEN'S	POLISHED CONCRETE	TILE TIL-2	TILE TIL-1/PAINT	TILE TIL-1/PAINT	TILE TIL-1/PAINT	TILE TIL-1	PAINT	QTZ-1 COUNTER, WD TRIM W/ LACUER FINISH @ EXP SIDES
01	FILE STORAGE	SEALED CONCRETE	RUBBER	EXP. CONC.	PAINT	EXP. CONC.	EXP. CONC.	EXP. STRUCTURE	
2	WOMEN'S	POLISHED CONCRETE	TILE TIL-2	TILE TIL-1/PAINT	TILE TIL-1/PAINT	TILE TIL-1	TILE TIL-1/PAINT	PAINT	QTZ-1 COUNTER, WD TRIM W/ LACUER FINISH @ EXP SIDES
02	MECHANICAL	POLISHED CONCRETE	RUBBER	PAINT	EXP. CONC.	EXP. CONC.	EXP. CONC.	EXP. STRUCTURE	
2B	CHASE	SEALED CONCRETE	RUBBER	PAINT	PAINT	PAINT	PAINT	EXP. STRUCTURE	FRP AT MOP SINK
3	IT	SEALED CONCRETE	RUBBER	PAINT	PAINT	PAINT	PAINT	ACT	
4	MECHANICAL	SEALED CONCRETE	RUBBER	PAINT	PAINT	PAINT	PAINT	EXP. STRUCTURE	
5	OFFICE	POLISHED CONCRETE	WOOD	PAINT/GLASS	PAINT	PAINT	PAINT	ACT	
5A	CLO	POLISHED CONCRETE	RUBBER	PAINT	PAINT	PAINT	PAINT	ACT	
6	BREAK AREA	POLISHED CONCRETE	WOOD	PAINT	PAINT	PAINT	PAINT	ACT	SOLID WOOD CABINETS PL-1 / QUARTZ COUNTER QTZ-1
7	OFFICE	POLISHED CONCRETE	WOOD	PAINT	PAINT/GLASS	PAINT	PAINT	ACT	
8	RESTROOM	POLISHED CONCRETE	TILE TIL-2	TILE TIL-1/PAINT	TILE TIL-1/PAINT	TILE TIL-1/PAINT	TILE TIL-1	ACT	
9	STAFF WORK AREA	POLISHED CONCRETE	WOOD	PAINT/GLASS	PAINT	PAINT	PAINT	ACT	PLASTIC LAMINATE CABINETS PL-1 / QUARTZ COUNTER QTZ-1
10	STAFF WORK AREA	POLISHED CONCRETE	WOOD	GLASS	PAINT	PAINT	STONE	EXP. STRUCTURE/STAIN	PLASTIC LAMINATE CABINETS PL-1 / QUARTZ COUNTER QTZ-2 / PECAN WOOD COUNTER TOP
11	LOBBY	POLISHED CONCRETE	WOOD	PAINT/STAINED	WOOD/GLASS	OPEN	STONE	EXP. STRUCTURE/STAIN	
12	OFFICE	POLISHED CONCRETE	WOOD	PAINT	PAINT/GLASS	PAINT	PAINT	ACT	
12A	CLO	POLISHED CONCRETE	RUBBER	GLASS	PAINT	PAINT	PAINT	ACT	
13	OFFICE	POLISHED CONCRETE	WOOD	PAINT	PAINT/GLASS	PAINT	PAINT	ACT	PLASTIC LAMINATE CABINETS PL-1 / QUARTZ COUNTER QTZ-1
13A	CLO	POLISHED CONCRETE	RUBBER	PAINT	PAINT	PAINT	PAINT	ACT	
14	OFFICE	POLISHED CONCRETE	WOOD	GLASS	PAINT	PAINT	PAINT	ACT	
14A	CLO	POLISHED CONCRETE	RUBBER	GLASS	PAINT	PAINT	PAINT	ACT	
15	MANAGER OFFICE	POLISHED CONCRETE	WOOD	GLASS	PAINT	PAINT	PAINT	ACT	
15A	CLO	POLISHED CONCRETE	RUBBER	PAINT	PAINT	PAINT	PAINT	ACT	
16	CORRIDOR	POLISHED CONCRETE	WOOD	PAINT	PAINT	PAINT	PAINT	ACT	PLASTIC LAMINATE CABINETS PL-1 / QUARTZ COUNTER QTZ-1
17	INTERPRETIVE GALLERY	POLISHED CONCRETE	WOOD	MTL SCREEN	GLASS	STONE	OPEN	EXP. STRUCTURE	
18	VESTIBULE	POLISHED CONCRETE	WOOD	PAINT	PAINT	PAINT	PAINT	GWB	
19	JANITOR	SEALED CONCRETE	RUBBER	PAINT	PAINT	PAINT	PAINT	ACT	FRP AT MOP SINK
20	RESTROOM	POLISHED CONCRETE	TILE TIL-2	TILE TIL-1/PAINT	TILE TIL-1/PAINT	TILE TIL-1	TILE TIL-1/PAINT	GWB/PAINT	
21	BREAKROOM	POLISHED CONCRETE	WOOD	PAINT/GLASS	PAINT	PAINT	PAINT	ACT	PLASTIC LAMINATE CABINETS PL-1 / QUARTZ COUNTER QTZ-1
22	CONFERENCE	POLISHED CONCRETE	WOOD	PAINT/GLASS	PAINT	PAINT/GLASS	PAINT	GWB	PLASTIC LAMINATE CABINETS PL-1 / QUARTZ COUNTER QTZ-1
23	STORAGE	SEALED CONCRETE	RUBBER	PAINT	PAINT	PAINT	PAINT	ACT	
24	FEE BOOTH	POLISHED CONCRETE	WOOD	PAINT/GLASS	PAINT/GLASS	PAINT/GLASS	PAINT	ACT	PLASTIC LAMINATE CABINETS PL-1 / QUARTZ COUNTER QTZ-1

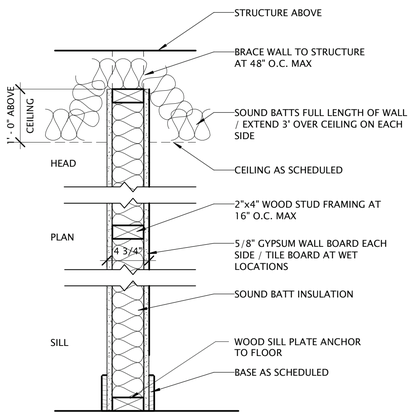

PARTITION TYPE "1"
NON- RATED PARTITION

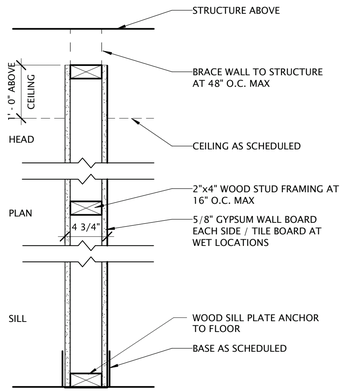

PARTITION TYPE "2"
NON- RATED PARTITION

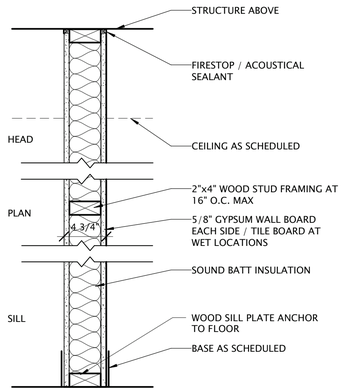

PARTITION TYPE "3"
NON- RATED PARTITION

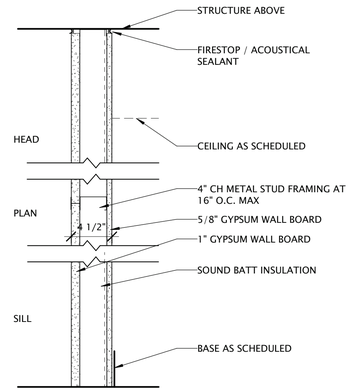

PARTITION TYPE "4"
1 HR. RATED PARTITION UL-U415

WALL LEGEND
1 1/2" = 1'-0"

TEXAS PARKS & WILDLIFE

FORD POWELL &CARSON
Architects & Planners, Inc.
Architecture
Planning
Preservation
Interior Design
1138 East Commerce Street
San Antonio, Texas 78205
210/226-1246
FPC# 92705

REGISTERED ARCHITECT
RACHEL L. H. WRIGHT
20948
STATE OF TEXAS

TYLER STATE PARK
HEADQUARTERS REPLACEMENT PHASE 1
PROJECT NUMBER: 112741

DATE: 07/03/2020
DESIGNED BY: Designer
DRAWN BY: EK
REVIEWED BY: SG/RW

no.	revision	date

SHEET TITLE
SCHEDULES & WALL TYPES

SHEET NUMBER
A401

CONSTRUCTION DOCUMENTS

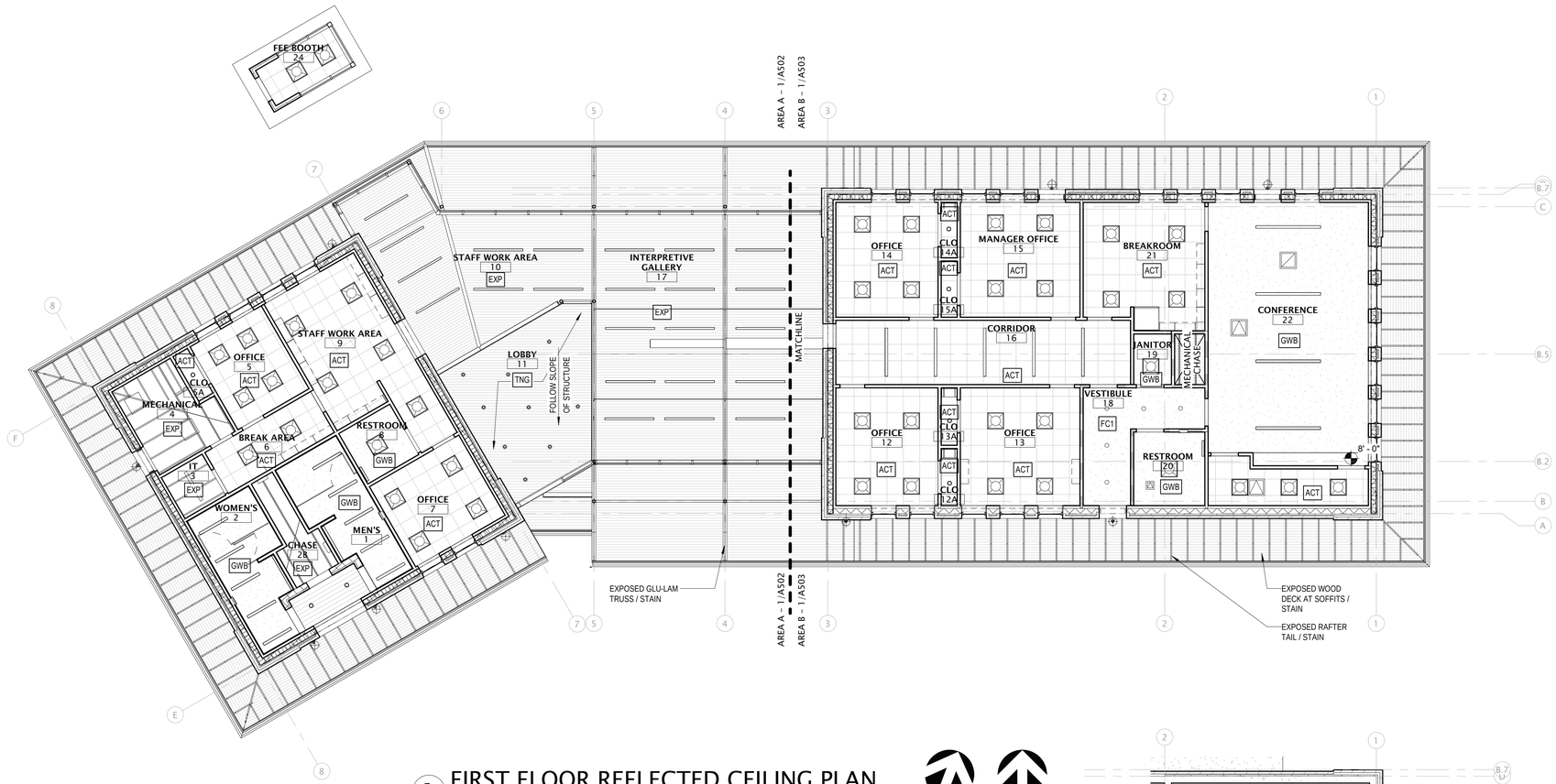

1 FIRST FLOOR REFLECTED CEILING PLAN

SCALE: 1/8" = 1'-0"

TRUE NORTH PLAN NORTH

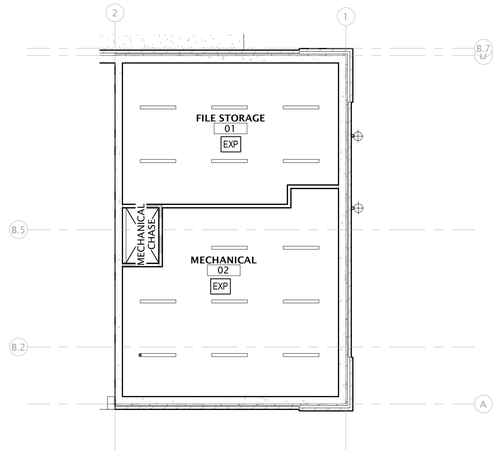

2 BASEMENT REFLECTED CEILING PLAN

SCALE: 1/8" = 1'-0"

TRUE NORTH PLAN NORTH

RCP GENERAL NOTES

ALL FIXTURE SYMBOLS AND TYPES FOR REFERNCE ONLY

SEE ELECTRICAL AND MECHANICAL PLANS FOR SPECIFIC FIXTURE TYPES AND DETAILS

FIELD MEASURE ALL SITE CONDITIONS AND NOTIFY ARCHITECT OF ANY DISCREPANCIES BETWEEN DIMENSIONS AND CONDITIONS AS THEY EXIST AND AS ARE NOTED ON THE DRAWINGS PRIOR TO COMENCEMENT OF THE WORK

PROVIDE SHOP DRAWINGS FOR REVIEW AND APROVAL BY ARCHITECT OR CONSULTANT PER SPECIFICATIONS

RCP LEGEND

SYMBOL	DESCRIPTION
	2X2 RECESSED LIGHT FIXTURE
	LINEAR PENDANT LIGHT FIXTURE 01
	LINEAR PENDANT LIGHT FIXTURE 02
	RECESSED CAN LIGHT FIXTURE
	DECORATIVE PENDANT LIGHT FIXTURE B.O.F. = BOTTOM OF FIXTURE ABOVE FINISHED FLOOR
	EXTERIOR ACCENT LIGHT
	SURFACE MOUNTED LIGHT FIXTURE
	2X2 SUPPLY AIR DIFFUSER
	1X2 RETURN AIR GRILLE
	EXHAUST FAN

CEILINGS AT 9'-0" A.F.F UNLESS NOTED OTHERWISE

ACT	ACOUSTIC CEILING TILE
GWB	GYPSUM CEILING
TNG	TONGUE AND GROOVE WOOD CEILING
EXP	EXPOSED TO STRUCTURE ABOVE
FC1	1 HR FIRE RATED CEILING SEE 2/A401

TEXAS PARKS & WILDLIFE

FORD POWELL &CARSON
Architects & Planners, Inc.
Architecture
Planning
Preservation
Interior Design
1138 East Commerce Street
San Antonio, Texas 78205
210/226-1246
FPC# 92705

REGISTERED ARCHITECT
RACHEL L. H. WRIGHT
20948
STATE OF TEXAS

TYLER STATE PARK
HEADQUARTERS REPLACEMENT PHASE 1
PROJECT NUMBER: 112741

DATE: 07/03/2020
DESIGNED BY: Designer
DRAWN BY: EK
REVIEWED BY: SG/RW

no.	revision	date

SHEET TITLE
REFLECTED CEILING PLANS

SHEET NUMBER
A501

CONSTRUCTION DOCUMENTS

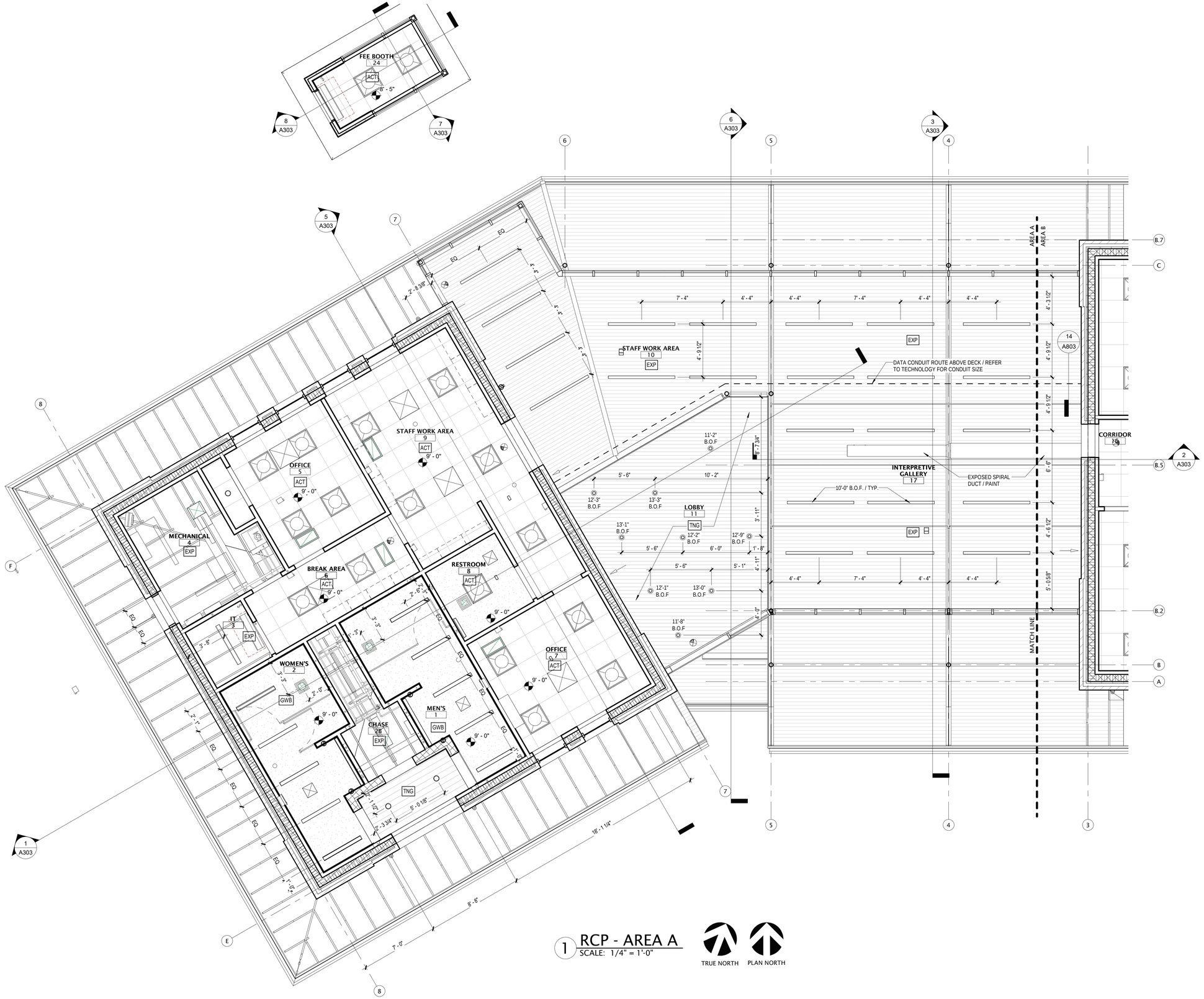

1 RCP - AREA A
SCALE: 1/4" = 1'-0"

TRUE NORTH PLAN NORTH

RCP LEGEND

SYMBOL	DESCRIPTION
	2X2 RECESSED LIGHT FIXTURE
	LINEAR PENDANT LIGHT FIXTURE 01
	LINEAR PENDANT LIGHT FIXTURE 02
	RECESSED CAN LIGHT FIXTURE
	DECORATIVE PENDANT LIGHT FIXTURE B.O.F. = BOTTOM OF FIXTURE ABOVE FINISHED FLOOR
	EXTERIOR ACCENT LIGHT
	SURFACE MOUNTED LIGHT FIXTURE
	2X2 SUPPLY AIR DIFFUSER
	1X2 RETURN AIR GRILLE
	EXHAUST FAN

CEILINGS AT 9'-0" A.F.F UNLESS NOTED OTHERWISE

ACT	ACOUSTIC CEILING TILE
GWB	GYPSUM CEILING
TNG	TONGUE AND GROOVE WOOD CEILING
EXP	EXPOSED TO STRUCTURE ABOVE
FC1	1 HR FIRE RATED CEILING SEE 2/A401

TEXAS PARKS & WILDLIFE

FORD POWELL &CARSON
Architects & Planners, Inc.
Architecture
Planning
Preservation
Interior Design
1138 East Commerce Street
San Antonio, Texas 78205
210/226-1246
FPC# 92705

REGISTERED ARCHITECT
RACHEL L. H. WRIGHT
20948
STATE OF TEXAS

TYLER STATE PARK
HEADQUARTERS REPLACEMENT PHASE 1
PROJECT NUMBER: 112741

DATE: 07/03/2020
DESIGNED BY: Designer
DRAWN BY: Author
REVIEWED BY: Checker

no.	revision	date

SHEET TITLE
REFLECTED CEILING PLAN - AREA A

SHEET NUMBER
A502

CONSTRUCTION DOCUMENTS

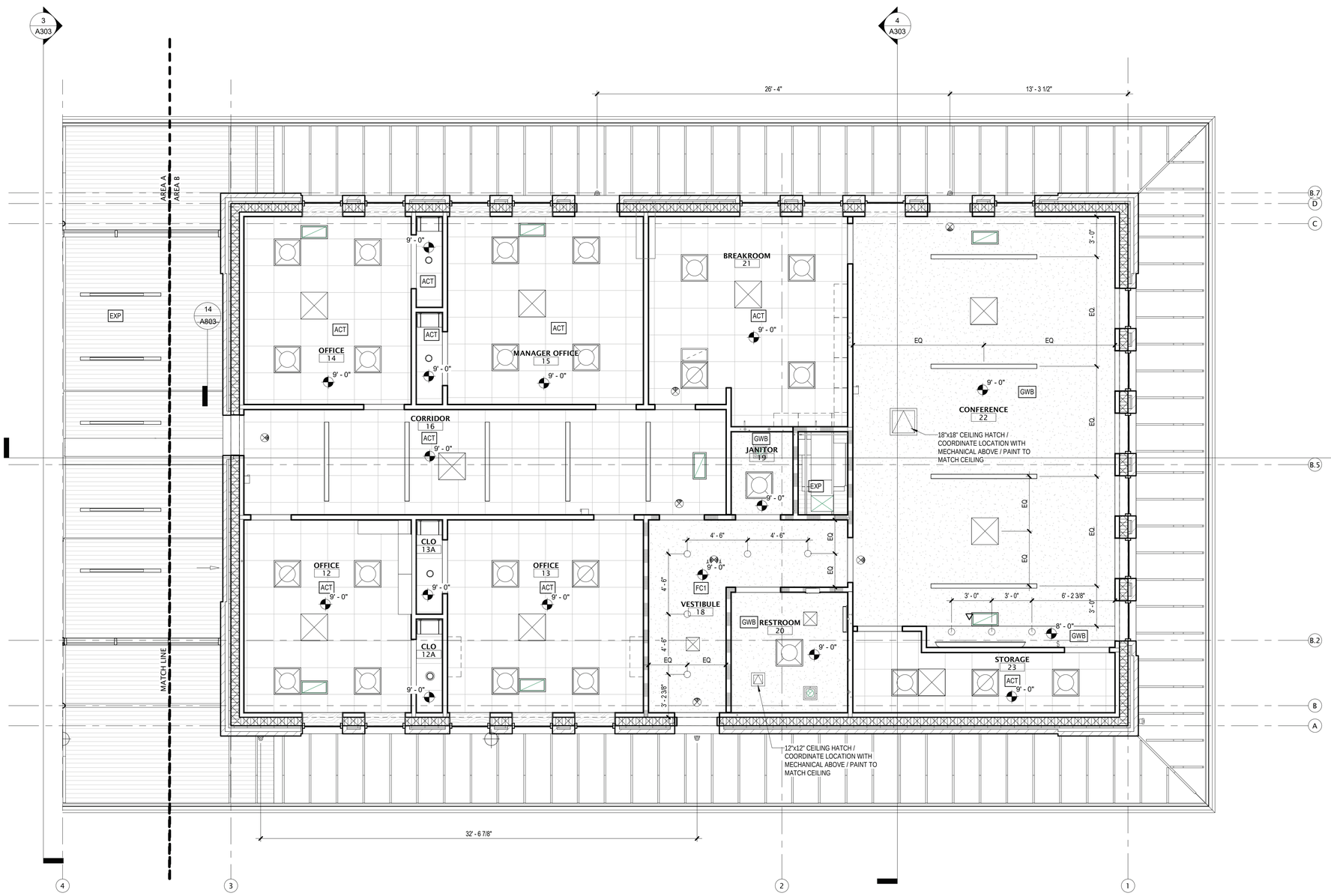

1 RCP - AREA B

SCALE: 1/4" = 1'-0"

TRUE NORTH PLAN NORTH

RCP LEGEND

SYMBOL	DESCRIPTION
	2X2 RECESSED LIGHT FIXTURE
	LINEAR PENDANT LIGHT FIXTURE 01
	LINEAR PENDANT LIGHT FIXTURE 02
	RECESSED CAN LIGHT FIXTURE
	DECORATIVE PENDANT LIGHT FIXTURE B.O.F. = BOTTOM OF FIXTURE ABOVE FINISHED FLOOR
	EXTERIOR ACCENT LIGHT
	SURFACE MOUNTED LIGHT FIXTURE
	2X2 SUPPLY AIR DIFFUSER
	1X2 RETURN AIR GRILLE
	EXHAUST FAN

CEILINGS AT 9'-0" A.F.F UNLESS NOTED OTHERWISE

ACT	ACOUSTIC CEILING TILE
GWB	GYPSUM CEILING
TNG	TONGUE AND GROOVE WOOD CEILING
EXP	EXPOSED TO STRUCTURE ABOVE
FC1	1 HR FIRE RATED CEILING SEE 2/A401

TEXAS PARKS & WILDLIFE

FORD POWELL &CARSON
Architects & Planners, Inc.
Architecture
Planning
Preservation
Interior Design
1138 East Commerce Street
San Antonio, Texas 78205
210/226-1246
FPC# 92705

REGISTERED ARCHITECT
RACHEL L. H. WRIGHT
20948
STATE OF TEXAS

TYLER STATE PARK

HEADQUARTERS REPLACEMENT PHASE 1

PROJECT NUMBER: 112741

DATE: 07/03/2020
DESIGNED BY: Designer
DRAWN BY: Author
REVIEWED BY: Checker

no.	revision	date

SHEET TITLE

REFLECTED CEILING PLAN - AREA B

SHEET NUMBER

A503

CONSTRUCTION DOCUMENTS

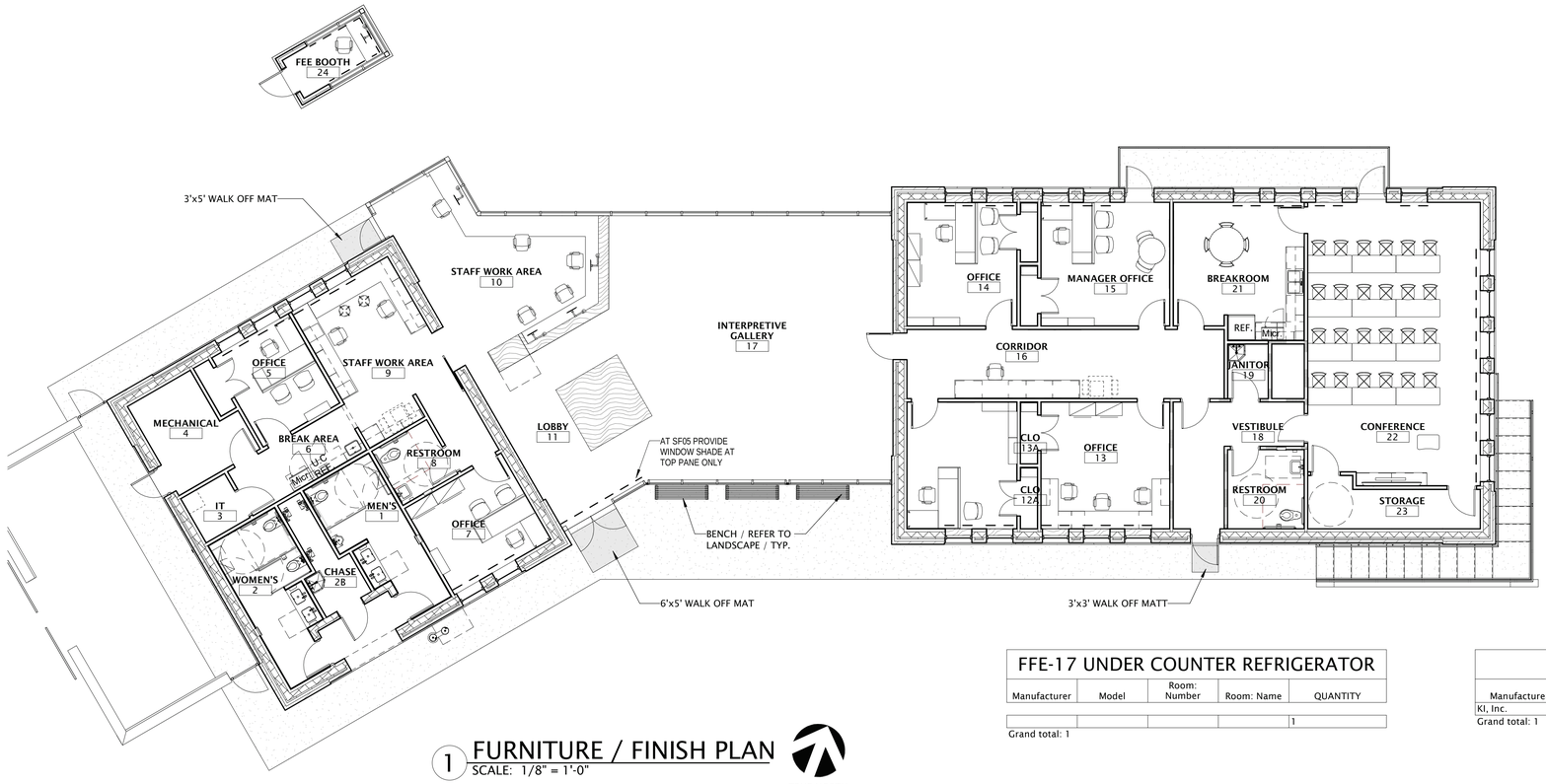

1 FURNITURE / FINISH PLAN

SCALE: 1/8" = 1'-0"

TRUE NORTH

FURNITURE, FIXTURE AND EQUIPMENT GENERAL NOTES

1. FURNITURE, FIXTURES AND EQUIPMENT SHOWN AND SCHEDULED IS TO BE INCLUDED IN CONTRACT

2. FURNITURE INCLUDED IN SCOPE IS FUNDED BY OWNER'S CONTINGENCY ALLOWANCE (OCA). OCA INCLUDES PROCUREMENT, INSTALLATION, AND OH + PROFIT. REFER TO BID SCHEDULE FOR CONTINGENCY LINE ITEM.

- - - - WINDOW SHADE LOCATIONS / INCLUDE IN FFE BUDGE ALLOWANCE / REFER TO SPECS FOR TYPE

FFE-18 MARKER BOARD

Manufacturer:	Model:	Room: Number	Room: Name	Qty:
REF. SPECS	REF. SPECS	5	OFFICE	1
REF. SPECS	REF. SPECS	6	BREAK AREA	1
REF. SPECS	REF. SPECS	7	OFFICE	1
REF. SPECS	REF. SPECS	12	OFFICE	1
REF. SPECS	REF. SPECS	13	OFFICE	1
REF. SPECS	REF. SPECS	14	OFFICE	1
REF. SPECS	REF. SPECS	15	MANAGER OFFICE	1
REF. SPECS	REF. SPECS	16	CORRIDOR	1
REF. SPECS	REF. SPECS	21	BREAKROOM	1
REF. SPECS	REF. SPECS	22	CONFERENCE	1

Grand total: 10

MOUNTING LOCATION AS SELECTED BY OWNER IN FIELD. PROVIDE BLOCKING IN WALL

FFE-19 TACK BOARD

Manufacturer:	Model:	Room: Number	Room: Name	Qty:
REF. SPECS	REF. SPECS	6	BREAK AREA	1
REF. SPECS	REF. SPECS	7	OFFICE	1
REF. SPECS	REF. SPECS	14	OFFICE	1
REF. SPECS	REF. SPECS	15	MANAGER OFFICE	1
REF. SPECS	REF. SPECS	16	CORRIDOR	1
REF. SPECS	REF. SPECS	21	BREAKROOM	1

Grand total: 6

MOUNTING LOCATION AS SELECTED BY OWNER IN FIELD. PROVIDE BLOCKING IN WALL

FFE-17 UNDER COUNTER REFRIGERATOR

Manufacturer	Model	Room: Number	Room: Name	QUANTITY
				1

Grand total: 1

FFE-16 LECTURN

Manufacturer:	Model:	Room: Number	Room: Name	Qty:
KI, Inc.	PN	22	CONFERENCE	1

Grand total: 1

PLAN ELEVATION

DESCRIPTION
LECTURN ON CASTERS

DIMENSIONS (APPROX.)
H ", W ", D "

FINISH

FFE-1 OFFICE DESK

Manufacturer:	Model:	Room: Number	Room: Name	Qty:
KI, Inc.	PN	7	OFFICE	1
KI, Inc.	PN	12	OFFICE	1

Grand total: 2

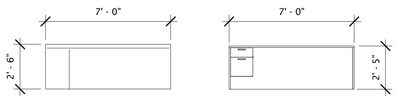

PLAN ELEVATION

DESCRIPTION
DESK WITH KEY BOARD TRAY

DIMENSIONS (APPROX.)
H ", W ", D "

FINISH

FFE-1.1 DESK RETURN

Manufacturer:	Model:	Room: Number	Room: Name	Qty:
KI, Inc.	ARPRT	5	OFFICE	1
KI, Inc.	ARPRT	7	OFFICE	1
KI, Inc.	ARPRT	12	OFFICE	1
KI, Inc.	ARPRT	14	OFFICE	1
KI, Inc.	ARPRT	15	MANAGER OFFICE	1

Grand total: 5

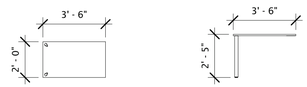

PLAN ELEVATION

DESCRIPTION
DESK RETURN

DIMENSIONS (APPROX.)
H ", W ", D "

FINISH

FFE-2 OFFICE CHAIR

Manufacturer:	Model:	Room: Number	Room: Name	Qty:
KI, Inc.	DIEM KIDE84C	5	OFFICE	1
KI, Inc.	DIEM KIDE84C	7	OFFICE	1
KI, Inc.	DIEM KIDE84C	9	STAFF WORK AREA	2
KI, Inc.	DIEM KIDE84C	10	STAFF WORK AREA	5
KI, Inc.	DIEM KIDE84C	12	OFFICE	1
KI, Inc.	DIEM KIDE84C	13	OFFICE	3
KI, Inc.	DIEM KIDE84C	14	OFFICE	1
KI, Inc.	DIEM KIDE84C	15	MANAGER OFFICE	1
KI, Inc.	DIEM KIDE84C	16	CORRIDOR	1
KI, Inc.	DIEM KIDE84C	24	FEE BOOTH	1

Grand total: 17



PLAN ELEVATION

DESCRIPTION
HIGH BACK ADJUSTABLE OFFICE CHAIR ON CASTERS

DIMENSIONS (APPROX.)
H ", W ", D "

FINISH

FFE-3 GUEST CHAIR

Manufacturer:	Model:	Room: Number	Room: Name	Qty:
KI, Inc.	DONI DNW100	5	OFFICE	2
KI, Inc.	DONI DNW100	7	OFFICE	2
KI, Inc.	DONI DNW100	12	OFFICE	1
KI, Inc.	DONI DNW100	14	OFFICE	2
KI, Inc.	DONI DNW100	15	MANAGER OFFICE	4

Grand total: 11



PLAN ELEVATION

DESCRIPTION
MID BACK GUEST CHAIR

DIMENSIONS (APPROX.)
H ", W ", D "

FINISH

TEXAS PARKS & WILDLIFE

FORD POWELL &CARSON
Architects & Planners, Inc.
Architecture
Planning
Preservation
Interior Design
1138 East Commerce Street
San Antonio, Texas 78205
210/226-1246
FPC# 92705

REGISTERED ARCHITECT
RACHEL L. H. WRIGHT
20949
STATE OF TEXAS

TYLER STATE PARK

HEADQUARTERS REPLACEMENT PHASE 1

PROJECT NUMBER: 112741

DATE: 07/03/2020
DESIGNED BY:
Designer
DRAWN BY: EK
REVIEWED BY:
SG/RW

no.	revision	date

SHEET TITLE
FURNITURE PLAN

SHEET NUMBER
A504

CONSTRUCTION DOCUMENTS

FFE-4 STACKING CHAIR

Manufacturer:	Model:	Room: Number	Room: Name	Qty:
		21	BREAKROOM	4
		22	CONFERENCE	24

Grand total: 28



PLAN ELEVATION

DESCRIPTION
STACKABLE CHAIR W/ NO ARMS, CASTERS

DIMENSIONS (APPROX.)
H ", W ", D "

FINISH

FFE-5 ROUND TABLE

Manufacturer:	Model:	Room: Number	Room: Name	Qty:
		15	MANAGER OFFICE	1
		21	BREAKROOM	1

Grand total: 2



PLAN ELEVATION

DESCRIPTION
CIRCULAR TABLE

DIMENSIONS (APPROX.)
H ", W ", D "

FINISH

FFE-6 CONFERENCE TABLE

Manufacturer:	Model:	Room: Number	Room: Name	Qty:
		22	CONFERENCE	12

Grand total: 12

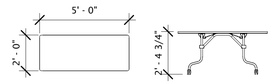

PLAN ELEVATION

DESCRIPTION
TABLE ON CASTERS

DIMENSIONS (APPROX.)
H ", W ", D "

FINISH

FFE-7 LATERAL FILE

Manufacturer:	Model:	Room: Number	Room: Name	Qty:
KI, Inc.	PN	13	OFFICE	2
KI, Inc.	PN	14	OFFICE	2

Grand total: 4

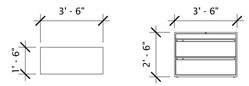

PLAN ELEVATION

DESCRIPTION
LATERAL FILE W/ PLASTIC LAMINATE TOP, LOCKS

DIMENSIONS (APPROX.)
H ", W ", D "

FINISH

FFE-8 REFRIGERATOR

Manufacturer	Model	Room: Number	Room: Name	QUANTITY
SAMSUNG	RS25	21	BREAKROOM	1

Grand total: 1

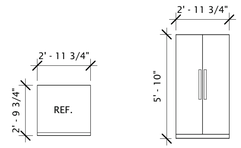

PLAN ELEVATION

DESCRIPTION
REFRIGERATOR

DIMENSIONS (APPROX.)
H ", W ", D "

FINISH

FFE-9 MICROWAVE

Manufacturer	Model	Room: Number	Room: Name	QUANTITY
				2

Grand total: 2

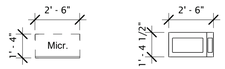

PLAN ELEVATION

DESCRIPTION
CIRCULAR TABLE

DIMENSIONS (APPROX.)
H ", W ", D "

FINISH

FFE-10 TELEVISION

Manufacturer:	Model:	Room: Number	Room: Name	Qty:
LG	86UM8070AUB	22	CONFERENCE	1

Grand total: 1



PLAN ELEVATION

DESCRIPTION
86" WALL MOUNTED TELEVISION, 4K SMART TV W/ WIDE VIEWING ANGLE

DIMENSIONS (APPROX.)
86" DIAG.

FINISH
STANDARD

FFE-11 STOOL

Manufacturer:	Model:	Room: Number	Room: Name	Qty:
		9	STAFF WORK AREA	2

Grand total: 2



PLAN ELEVATION

DESCRIPTION
FOUR LEG STOOL

DIMENSIONS (APPROX.)
H ", W ", D "

FINISH

FFE-12 LATERAL FILE

Manufacturer:	Model:	Room: Number	Room: Name	Qty:
KI, Inc.	PN	13	OFFICE	2
KI, Inc.	PN	14	OFFICE	2

Grand total: 4

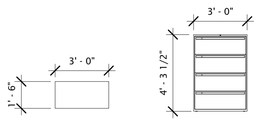

PLAN ELEVATION

DESCRIPTION
LATERAL FILE W/ PLASTIC LAMINATE TOP, LOCKS

DIMENSIONS (APPROX.)
H ", W ", D "

FINISH

FFE-13 BOOK SHELF 6'-0"

Manufacturer:	Model:	Room: Number	Room: Name	Qty:
		5	OFFICE	1
		7	OFFICE	1
		12	OFFICE	3

Grand total: 5

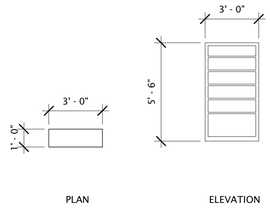

PLAN ELEVATION

DESCRIPTION
BOOK SHELF W/ ADJUSTABLE SHELVING

DIMENSIONS (APPROX.)
H ", W ", D "

FINISH

FFE-14 BOOK SHELF 6'-0"

Manufacturer:	Model:	Room: Number	Room: Name	Qty:
		14	OFFICE	2
		15	MANAGER OFFICE	2

Grand total: 4

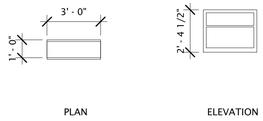

PLAN ELEVATION

DESCRIPTION
BOOK SHELF WITH ADJUSTABLE SHELVING AND PLASTIC LAMINATE TOP

DIMENSIONS (APPROX.)
H ", W ", D "

FINISH

FFE-15 SOUND BAR

Manufacturer:	Model:	Room: Number	Room: Name	Qty:
LG	SL7Y	22	CONFERENCE	1

Grand total: 1

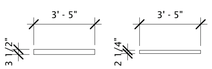

PLAN ELEVATION

DESCRIPTION
3.1 CHANNEL 420W SOUND BAR

DIMENSIONS (APPROX.)
2.2" x 41.7" X 3.4" (H ", W ", D ")

FINISH
STANDARD

TEXAS PARKS & WILDLIFE

FORD POWELL &CARSON
Architects & Planners, Inc.
Architecture
Planning
Preservation
Interior Design
1138 East Commerce Street
San Antonio, Texas 78205
210/226-1246
FPC# 92705

REGISTERED ARCHITECT
RACHEL L. H. WRIGHT
20948
STATE OF TEXAS

TYLER STATE PARK
HEADQUARTERS REPLACEMENT PHASE 1
PROJECT NUMBER: 112741

DATE: 07/03/2020
DESIGNED BY: Designer
DRAWN BY: EK
REVIEWED BY: SG/RW

no.	revision	date

SHEET TITLE
FURNITURE SCHEDULE

SHEET NUMBER
A505

CONSTRUCTION DOCUMENTS

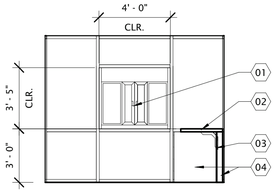

1 STAFF @ TICKET WINDOW
1/4" = 1'-0"

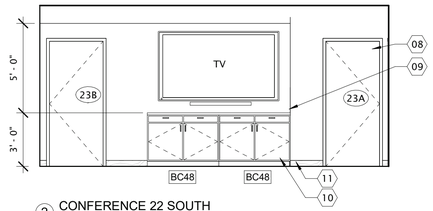

2 CONFERENCE 22 SOUTH
1/4" = 1'-0"

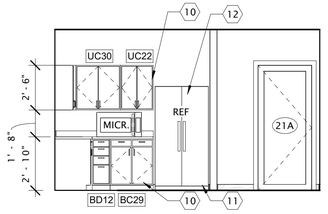

3 BREAKROOM 21 SOUTH
1/4" = 1'-0"

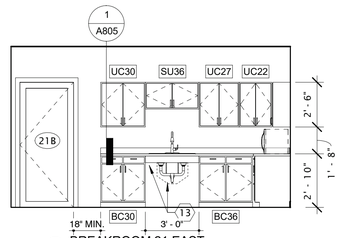

4 BREAKROOM 21 EAST
1/4" = 1'-0"

TOILET ACCESSORIES			
Type Mark	Manufacturer	Model	Type Comments
T-01	BOBRICK	B-396	RECESSED PAPER TOWEL / TRASH RECEPTACLE
T-02	BOBRICK	B-4112	SOAP DISPENSER
T-03	TRUBRO	LAV GUARD 2	TAS COMPLIANT PIPE COVERS
T-04	BOBRICK	B-290 2448	TAS COMPLIANT MIRROR
T-05	BOBRICK	B-5806X36	TAS COMPLIANT 36" GRAB BARS
T-06	BOBRICK	B-5806X42	TAS COMPLIANT 42" GRAB BARS
T-07	BOBRICK	B-858	DESIGNER SERIES SOAP DISPENSER
T-08	BOBRICK	B-2892	TOILET PAPER DISPENSER
T-10	KOALABEAR	KB110-SSRE	TAS COMPLIANT BABY CHANGING STATION
T-11	CFCI	CFCI	TAS COMPLIANT 24" X 42" FRAMELESS MIRROR
T-12	SLIMDRI	L971	ELECTRIC HAND DRYER
T-13	BRADLEY	STLS STL S400 SENTINEL	TOILET PARTITIONS
T-14	BOBRICK	B-3644	TRASH RECEPTACLE

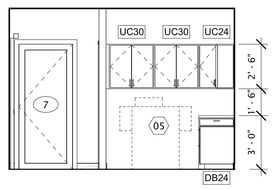

11 STAFF 9 SE
1/4" = 1'-0"

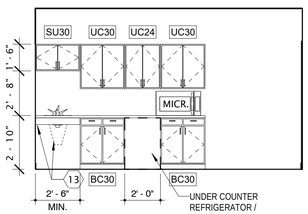

12 BREAK ROOM 6
1/4" = 1'-0"

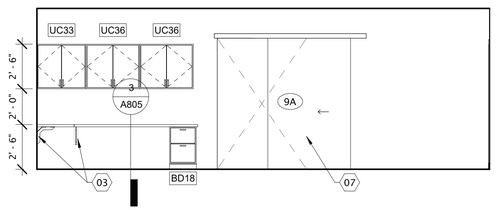

13 STAFF 9 NE
1/4" = 1'-0"

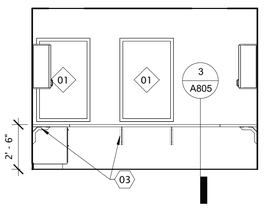

14 STAFF 9 NW
1/4" = 1'-0"

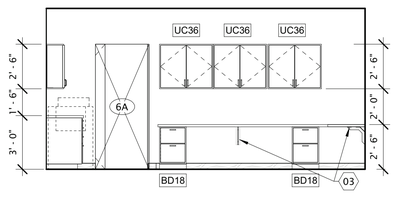

15 STAFF 9 SW
1/4" = 1'-0"

INTERIOR KEYNOTES	
#	DESCRIPTION
01	TICKET WINDOW IN ALUM FRAMED WINDOW SYSTEM
02	COUNTER TOP AS SCHED.
03	COUNTER SUPPORT / PROVIDE BLOCKING IN WALL @ 36" O.C. MAX
04	KNEE WALL @ SPANDREL GLASS
05	COPIER, BY OWNER
07	SURFACE MOUNTED SLINDING DOOR AS SCHED.
08	DOOR AND FRAME AS SCHED.
09	WALL FINISH AS SCHED.
10	CUSTOM MILLWORK / FINISH AS SCHED.
11	BASE AS SCHED.
12	REFRIGERATOR BY CONTRACTOR / PROVIDE WATER LINE
13	TAS COMPLIANT KNEE SPACE / PIPE COVERS
14	COUNTERTOPS FROM NATURAL EDGE SLABS OF TEXAS PECAN, WITH BUILT-IN CASEWORK BELOW / PECAN SLABS BASIS OF DESIGN IS SIM TO THOSE PROVIDED BY BERDOLL SAWMILL OR EQUAL.
15	FIVE 3/4" PLASTIC LAMINATE SHELVES ON HEAVY DUTY STANDARDS AND BRACKETS

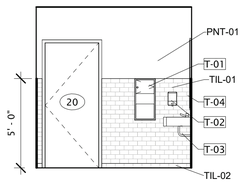

5 RR 20 NORTH
1/4" = 1'-0"

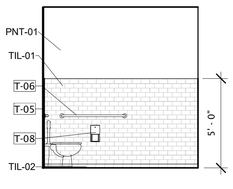

9 RR 20 SOUTH
1/4" = 1'-0"

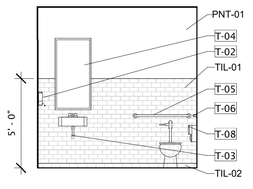

10 RR 20 EAST
1/4" = 1'-0"

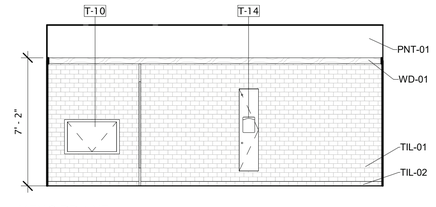

6 MEN'S RR 1 NE
1/4" = 1'-0"

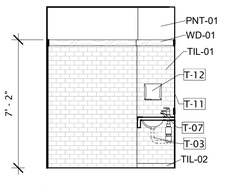

7 MEN'S RR 1 SE
1/4" = 1'-0"

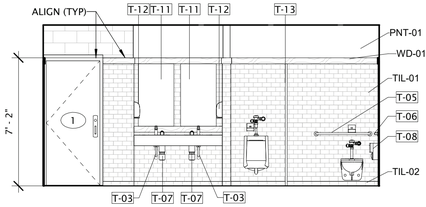

8 MEN'S RR 1 SW
1/4" = 1'-0"

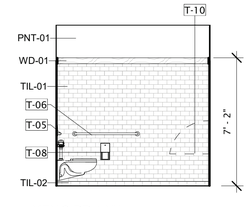

21 MEN'S RR 1 NW
1/4" = 1'-0"

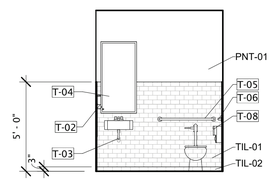

20 RR 8 WEST
1/4" = 1'-0"

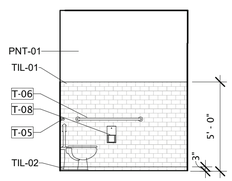

19 RR 8 NORTH
1/4" = 1'-0"

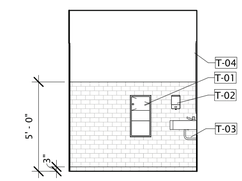

18 RR8 SOUTH
1/4" = 1'-0"

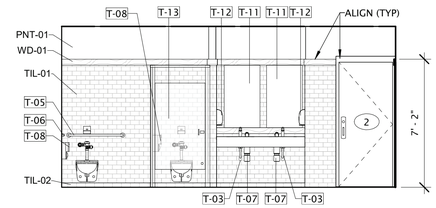

25 WOMEN'S RR 2 NE
1/4" = 1'-0"

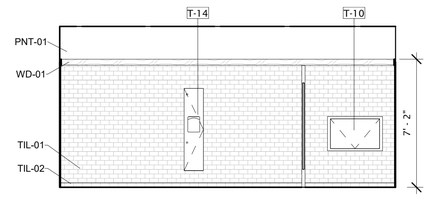

24 WOMEN'S RR 2 SW
1/4" = 1'-0"

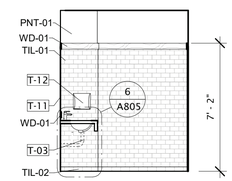

23 WOMEN'S RR 2 SE
1/4" = 1'-0"

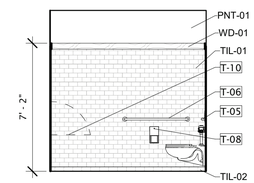

22 WOMEN'S RR 2 NW
1/4" = 1'-0"

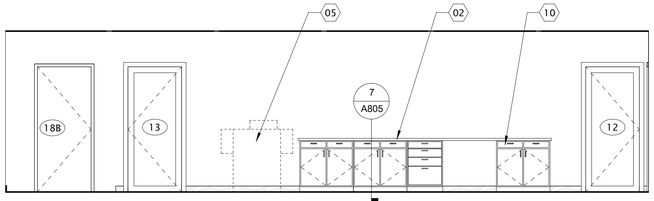

16 INTERIOR ELEVATION SCREEN WALL
1/4" = 1'-0"

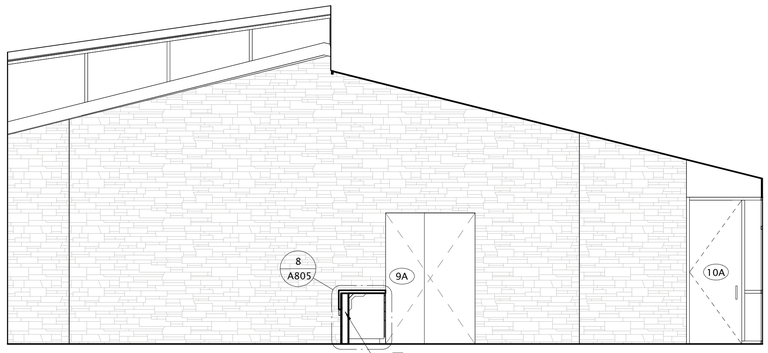

17 LOBBY SW
1/4" = 1'-0"

TEXAS PARKS & WILDLIFE

FORD POWELL &CARSON
Architects & Planners, Inc.
Architecture
Planning
Preservation
Interior Design
1138 East Commerce Street
San Antonio, Texas 78205
210/226-1246
FPC# 92705

REGISTERED ARCHITECT
RACHEL L. H. WRIGHT
20948
STATE OF TEXAS

TYLER STATE PARK

HEADQUARTERS REPLACEMENT PHASE 1

PROJECT NUMBER: 112741

DATE: 07/03/2020
DESIGNED BY: Designer
DRAWN BY: EK
REVIEWED BY: SG/RW

no.	revision	date

SHEET TITLE
INTERIOR ELEVATIONS

SHEET NUMBER
A601

CONSTRUCTION DOCUMENTS

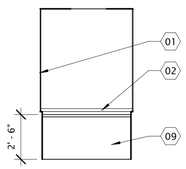

9 FEE BOOTH NE
1/4" = 1'-0"

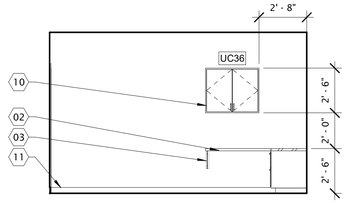

7 OFFICE 13 E
1/4" = 1'-0"

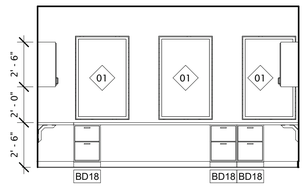

6 OFFICE 13 S
1/4" = 1'-0"

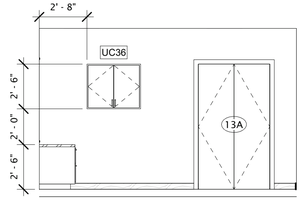

26 OFFICE 13 W
1/4" = 1'-0"

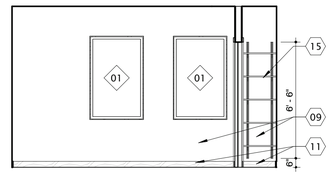

10 TYPICAL OFFICE / CLOSET
1/4" = 1'-0"

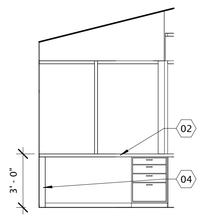

1 STAFF 10 NE
1/4" = 1'-0"

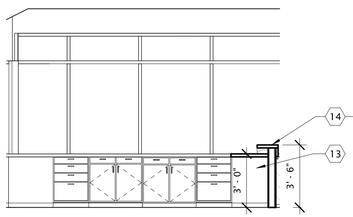

2 STAFF 10 N
1/4" = 1'-0"

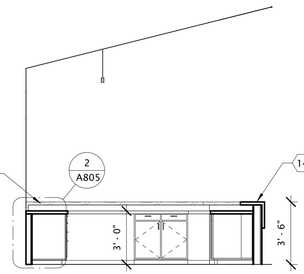

3 STAFF 10 E
1/4" = 1'-0"

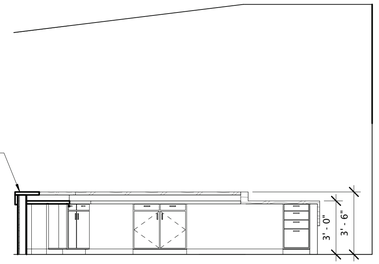

4 STAFF 10 SE
1/4" = 1'-0"

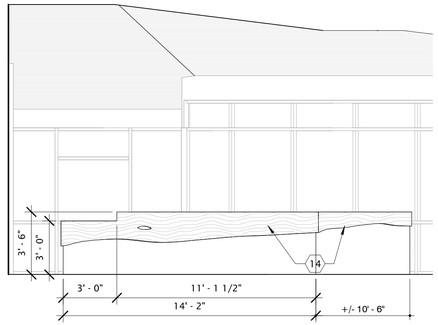

5 STAFF 10 NW
1/4" = 1'-0"

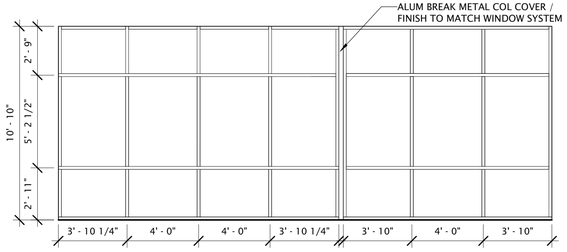

22 ALUM WINDOW SYSTEM SF06
1/4" = 1'-0"

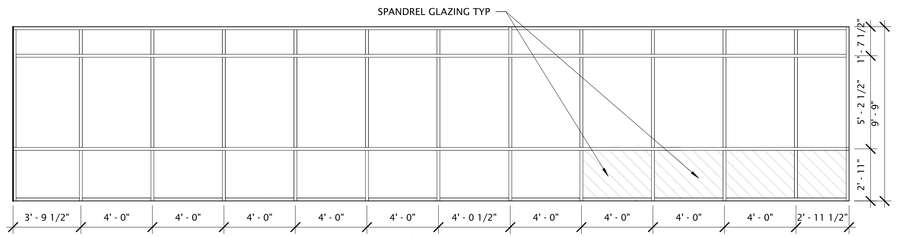

13 ALUM WINDOW SYSTEM SF01
1/4" = 1'-0"

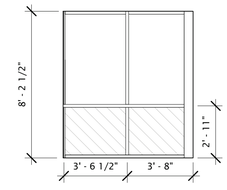

14 ALUM WINDOW SYSTEM SF02
1/4" = 1'-0"

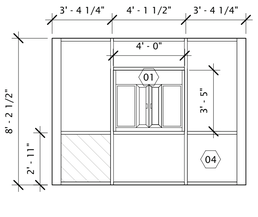

15 ALUM WINDOW SYSTEM SF03
1/4" = 1'-0"

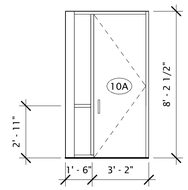

16 ALUM WINDOW SYSTEM SF04
1/4" = 1'-0"

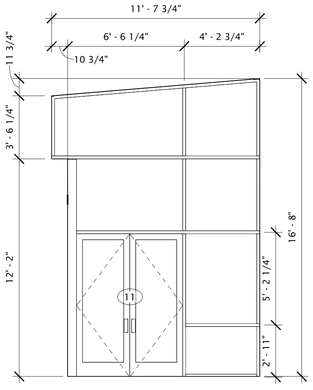

21 ALUM WINDOW SYSTEM SF05
1/4" = 1'-0"

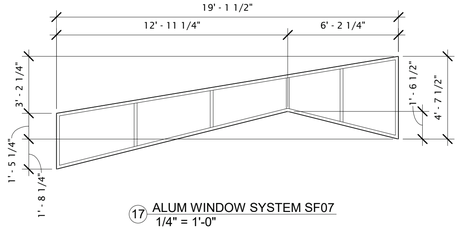

17 ALUM WINDOW SYSTEM SF07
1/4" = 1'-0"

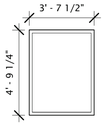

18 ALUM WINDOW SYSTEM SF08
1/4" = 1'-0"

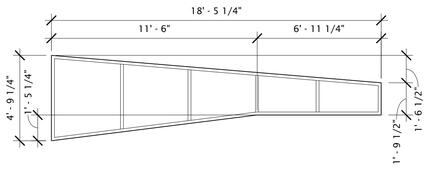

19 ALUM WINDOW SYSTEM SF09
1/4" = 1'-0"

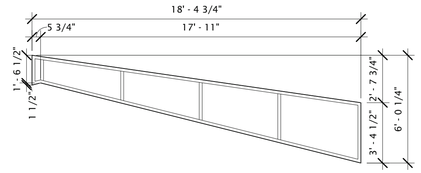

20 ALUM WINDOW SYSTEM SF10
1/4" = 1'-0"

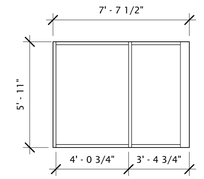

8 ALUM WINDOW SYSTEM SF11
1/4" = 1'-0"

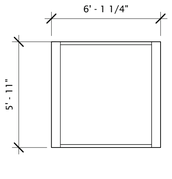

24 ALUM WINDOW SYSTEM SF12
1/4" = 1'-0"

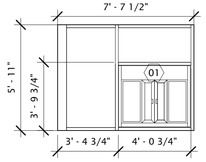

25 ALUM WINDOW SYSTEM SF13
1/4" = 1'-0"

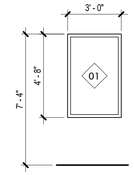

23 ALUM. FRAMED WINDOW 01 TYP.
1/4" = 1'-0"

GENERAL NOTES

ALL "ALUMINUM WINDOW SYSTEMS" ARE COMPRISED OF ALUMINUM ANODIZED FRAMES WITH 1" INSULATED GLASS, SEE SPECIFIATIONS FOR MORE INFORMATION.

CONTRACTOR MUST FIELD VERIFY ALL CONDITIONS AND PROVIDE SHOP DRAWINGS FOR ARCHITECT APPROVAL PER SPECIFICATIONS.

DO NOT SCALE FROM DRAWINGS AND INFORM ARCHITECT OF ANY DISCREPENCIES BETWEEN DIMENSIONS SHOWN HERE AND ACTUAL FIELD CONDITIONS.

SAFETY GLAZING - TEMPERED GLASS SHALL BE PROVIDED PER SECTION 2406 OF THE IBC.

-ALL GLAZING IN DOORS

-ALL GLAZING ADJACENT TO DOORS

-ALL GLAZING IN WINDOWS MEETING ALL OF THE FOLLOWING CONDITIONS:

-EXPOSED AREA OF WINDOW IS GREATER THAN 9 SF

-THE BOTTOM EDGE OF GLAZING IS LESS THAN 18" ABOVE THE FLOOR

-THE TOP EDGE OF THE GLAZING IS GREATER THAN 36" ABOVE THE FLOOR AND ONE OR MORE WALKING SURFACES ARE WITHIN 36" MEASURED HORIZONTALLY AND IN A STRAIGHT LINE OF THE PLANE OF THE GLAZING.

*THIS LIST IS PROVIDED FOR REFERENCE ONLY AND ALL REQUIREMENTS FOR SAFETY GLAZING ARE NOT EXPLICITLY STATED HERE.

INTERIOR KEYNOTES

#	DESCRIPTION
01	TICKET WINDOW IN ALUM FRAMED WINDOW SYSTEM
02	COUNTER TOP AS SCHED.
03	COUNTER SUPPORT / PROVIDE BLOCKING IN WALL @ 36" O.C. MAX
04	KNEE WALL @ SPANDREL GLASS
05	COPIER, BY OWNER
07	SURFACE MOUNTED SLINDING DOOR AS SCHED.
08	DOOR AND FRAME AS SCHED.
09	WALL FINISH AS SCHED.
10	CUSTOM MILLWORK / FINISH AS SCHED.
11	BASE AS SCHED.
12	REFRIGERATOR BY CONTRACTOR / PROVIDE WATER LINE
13	TAS COMPLIANT KNEE SPACE / PIPE COVERS
14	COUNTERTOPS FROM NATURAL EDGE SLABS OF TEXAS PECAN, WITH BUILT-IN CASEWORK BELOW / PECAN SLABS BASIS OF DESIGN IS SIM TO THOSE PROVIDED BY BERDOLL SAWMILL OR EQUAL.
15	FIVE 3/4" PLASTIC LAMINATE SHELVES ON HEAVY DUTY STANDARDS AND BRACKETS

TEXAS PARKS & WILDLIFE

FORD POWELL &CARSON
Architects & Planners, Inc.
Architecture
Planning
Preservation
Interior Design
1138 East Commerce Street
San Antonio, Texas 78205
210/226-1246
FPC# 92705

REGISTERED ARCHITECT
RACHEL L. H. WRIGHT
20948
STATE OF TEXAS

TYLER STATE PARK

HEADQUARTERS REPLACEMENT PHASE 1

PROJECT NUMBER: 112741

DATE: 07/03/2020
DESIGNED BY: Designer
DRAWN BY: EK
REVIEWED BY: SG/RW

no.	revision	date

SHEET TITLE

INTERIOR / STOREFRONT ELEVATIONS

SHEET NUMBER

A602

CONSTRUCTION DOCUMENTS

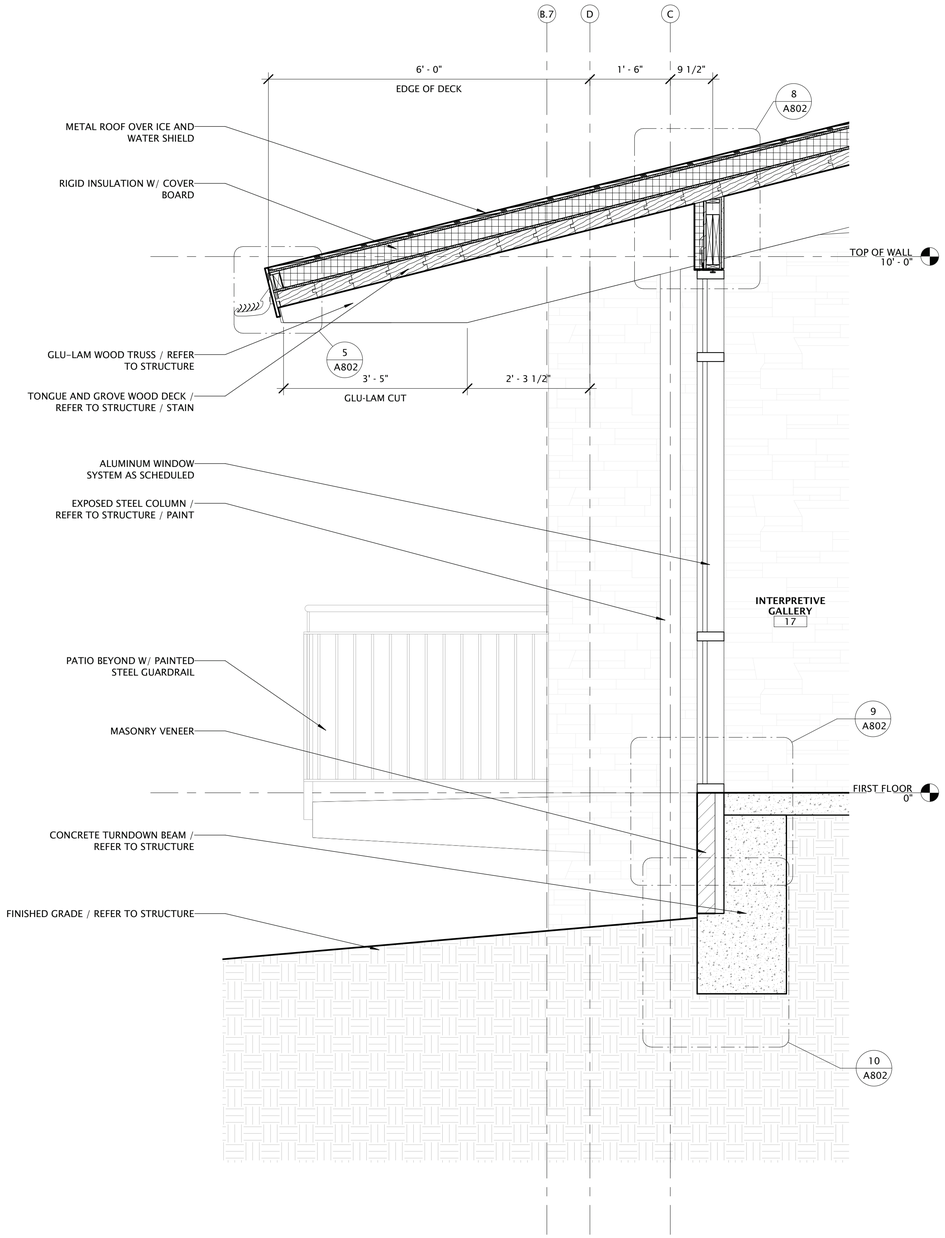

1 WALL SECTION @ SF01
3/4" = 1'-0"

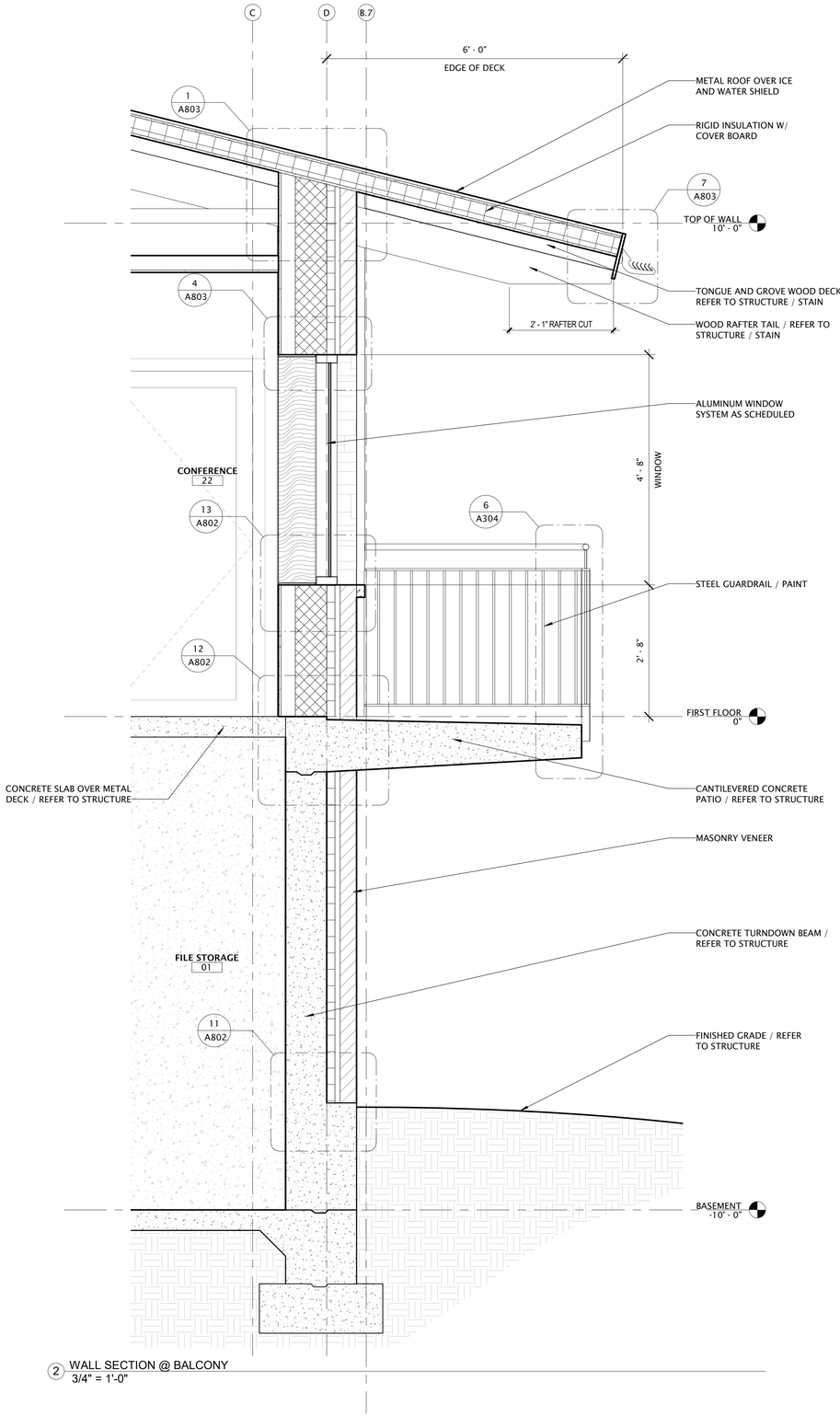

2 WALL SECTION @ BALCONY
3/4" = 1'-0"

TEXAS PARKS & WILDLIFE

FORD POWELL &CARSON
Architects & Planners, Inc.
Architecture
Planning
Preservation
Interior Design
1138 East Commerce Street
San Antonio, Texas 78205
210/226-1246
FPC# 92705

REGISTERED ARCHITECT
RACHEL L. H. WRIGHT
20948
STATE OF TEXAS

TYLER STATE PARK

HEADQUARTERS REPLACEMENT PHASE 1

PROJECT NUMBER: 112741

DATE: 07/03/2020
DESIGNED BY: Designer
DRAWN BY: EK
REVIEWED BY: SG/RW

no.	revision	date

SHEET TITLE
WALL SECTIONS

SHEET NUMBER
A701

CONSTRUCTION DOCUMENTS

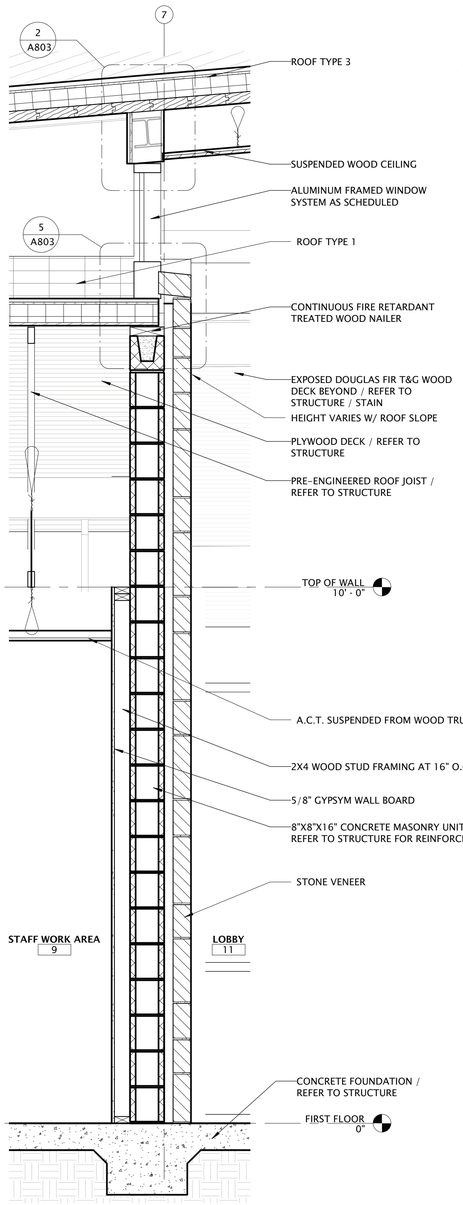

1 WALL SECTION @ LOBBY / SF10
3/4" = 1'-0"

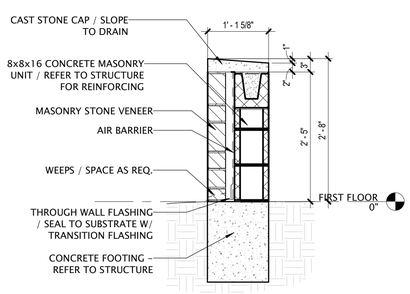

7 SCREEN WALL
3/4" = 1'-0"

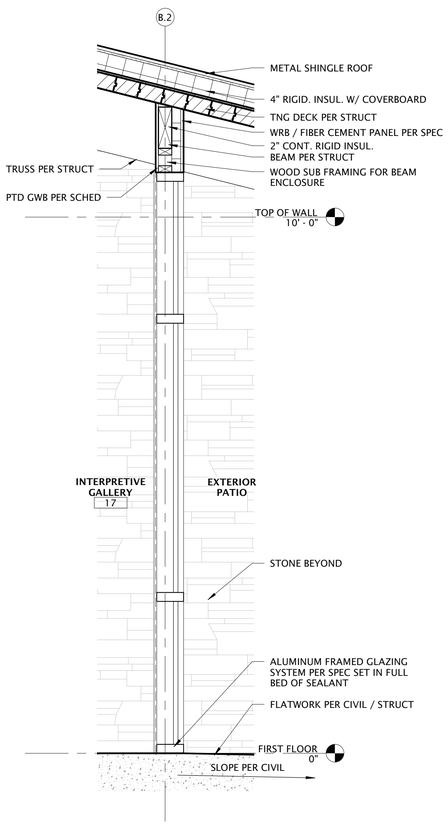

2 WALL SECTION @ GALLERY
3/4" = 1'-0"

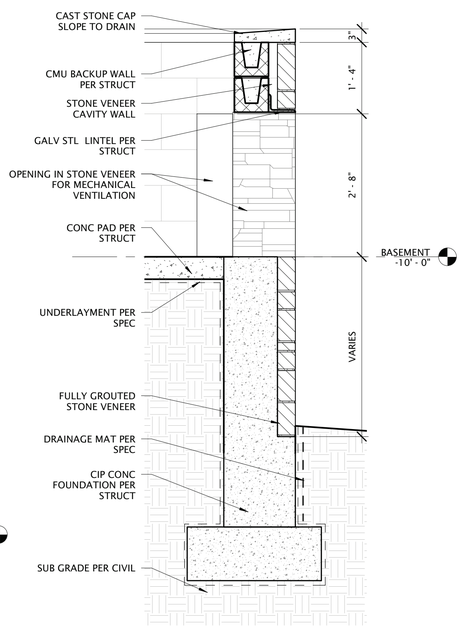

5 WALL SECTION @ MECH SCREEN
3/4" = 1'-0"

4 TYP RR WALL W/ CURB
3/4" = 1'-0"

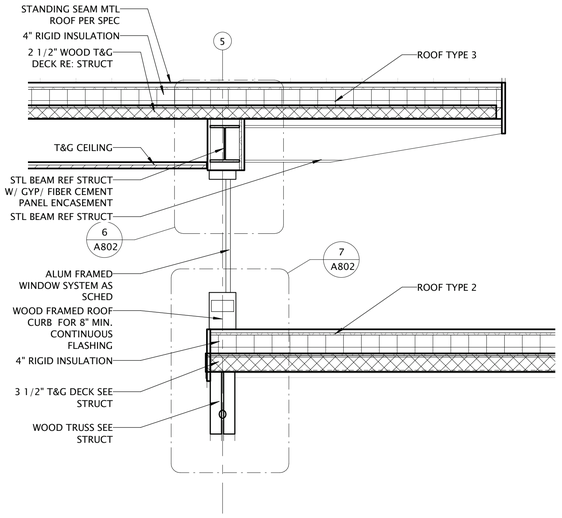

6 WALL SECTION @ CELERSTORY WINDOW SYSTEM SF07
3/4" = 1'-0"

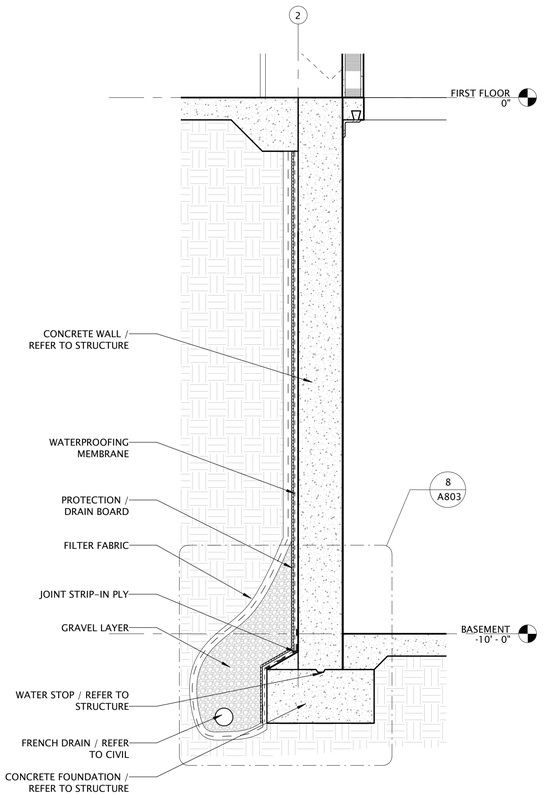

3 BASEMENT FOUNDATION WALL
3/4" = 1'-0"

TEXAS PARKS & WILDLIFE

FORD POWELL &CARSON
Architects & Planners, Inc.
Architecture
Planning
Preservation
Interior Design
1138 East Commerce Street
San Antonio, Texas 78205
210/226-1246
FPC# 92705

REGISTERED ARCHITECT
RACHEL L. H. WRIGHT
20948
STATE OF TEXAS

TYLER STATE PARK
HEADQUARTERS REPLACEMENT PHASE 1
PROJECT NUMBER: 112741

DATE: 07/03/2020
DESIGNED BY: Designer
DRAWN BY: EK
REVIEWED BY: SG/RW

no.	revision	date

SHEET TITLE
WALL SECTIONS

SHEET NUMBER
A702

CONSTRUCTION DOCUMENTS

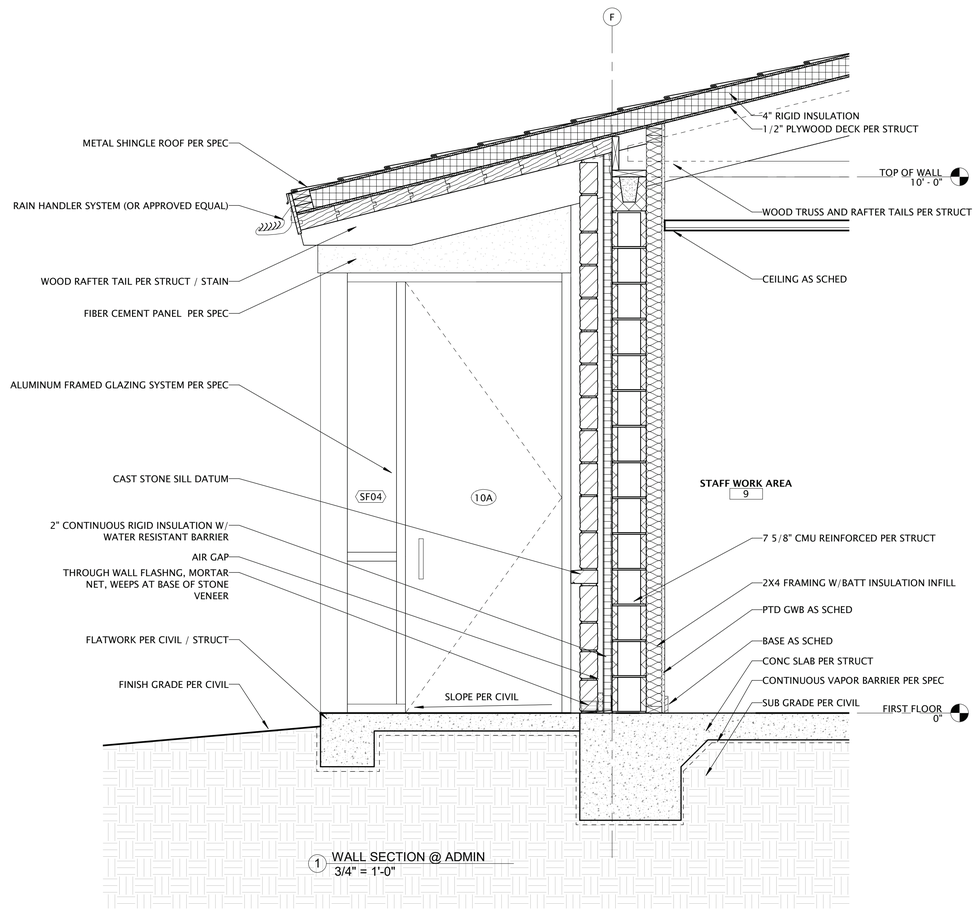

1 WALL SECTION @ ADMIN
3/4" = 1'-0"

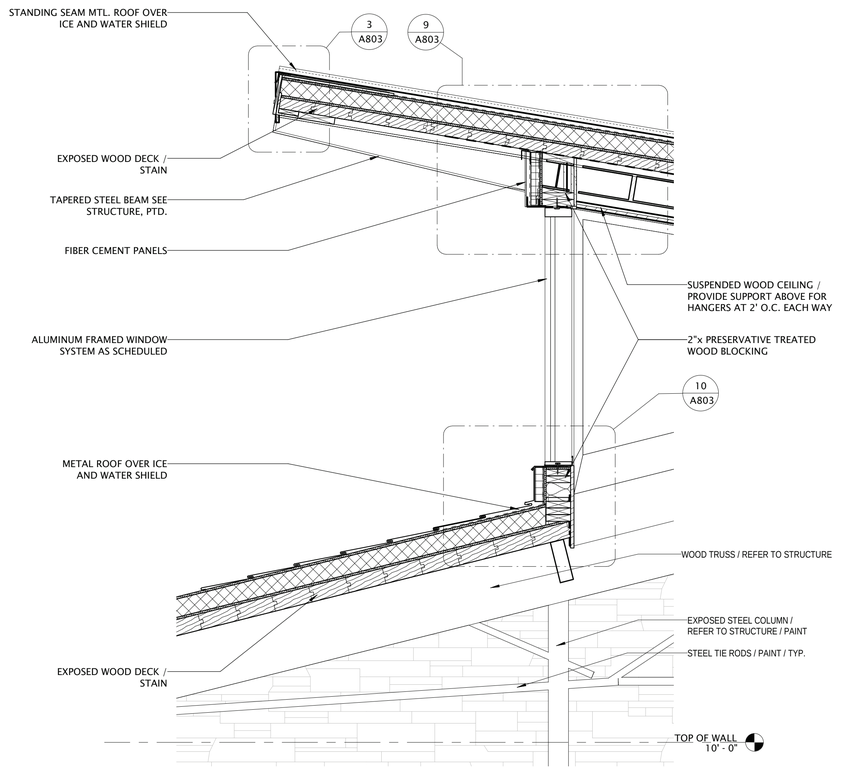

2 WALL SECTION CLERESTORY NORTH
3/4" = 1'-0"

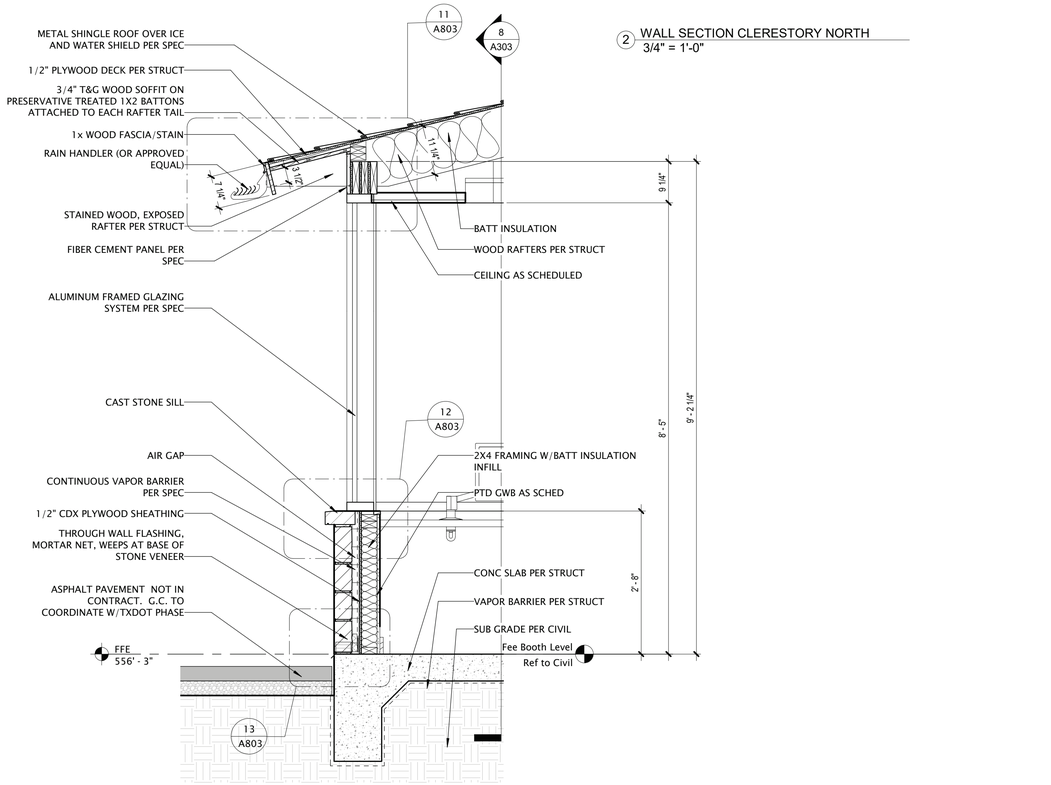

3 WALL SECTION @ FEE BOOTH
3/4" = 1'-0"

TEXAS PARKS & WILDLIFE

FORD POWELL &CARSON
Architects & Planners, Inc.
Architecture
Planning
Preservation
Interior Design
1138 East Commerce Street
San Antonio, Texas 78205
210/226-1246
FPC# 92705

REGISTERED ARCHITECT
RACHEL L. H. WRIGHT
20949
STATE OF TEXAS

TYLER STATE PARK
HEADQUARTERS REPLACEMENT PHASE 1
PROJECT NUMBER: 112741

DATE: 07/03/2020
DESIGNED BY: Designer
DRAWN BY: EK
REVIEWED BY: SG/RW

no.	revision	date

SHEET TITLE
WALL SECTIONS

SHEET NUMBER
A703

CONSTRUCTION DOCUMENTS

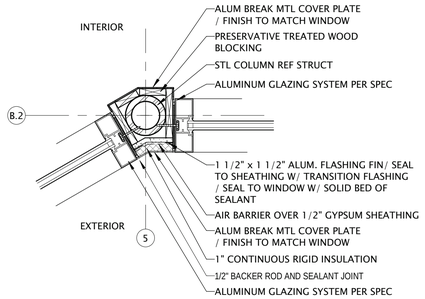

7 ENLARGED FLOOR PLAN - CURTAIN WALL PIVOT
1 1/2" = 1'-0"

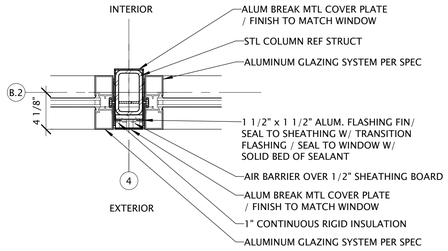

6 PLAN DETAIL @ CURTAIN WALL COLUMN
1 1/2" = 1'-0"

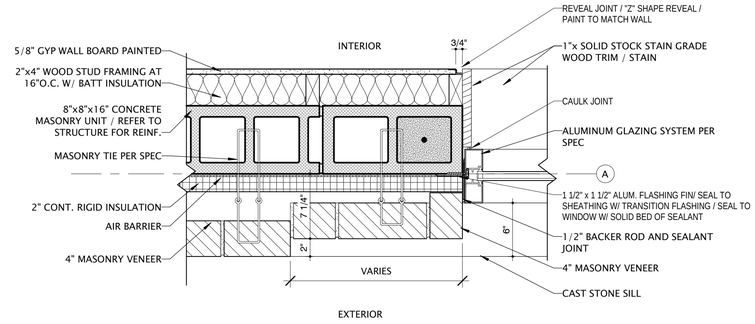

1 TYP WINDOW JAMB
1 1/2" = 1'-0"

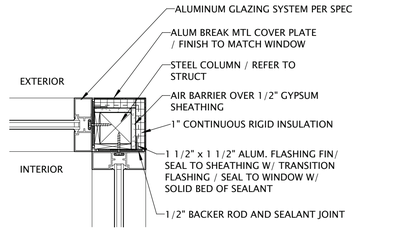

5 PLAN DETAIL @ TYP. SF CORNER
1 1/2" = 1'-0"

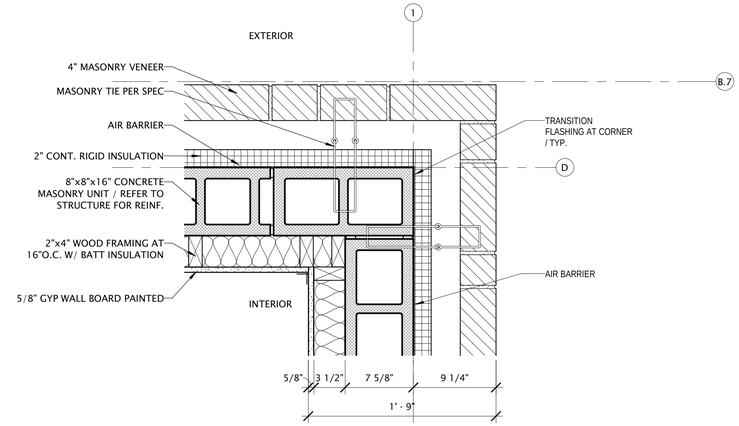

2 PLAN DETAIL @ STONE CORNER TYP
1 1/2" = 1'-0"

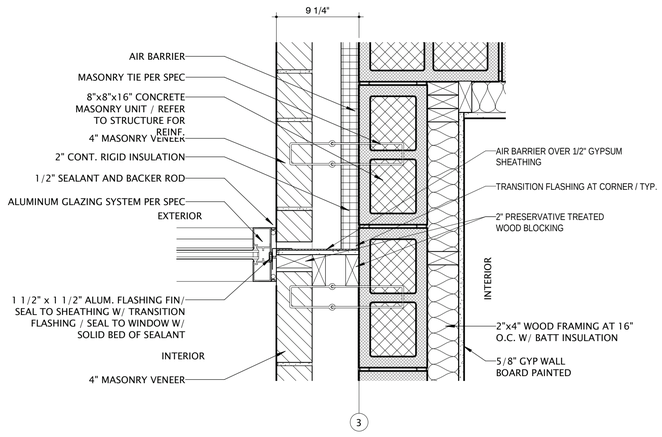

3 PLAN DETAIL @ MULLION
1 1/2" = 1'-0"

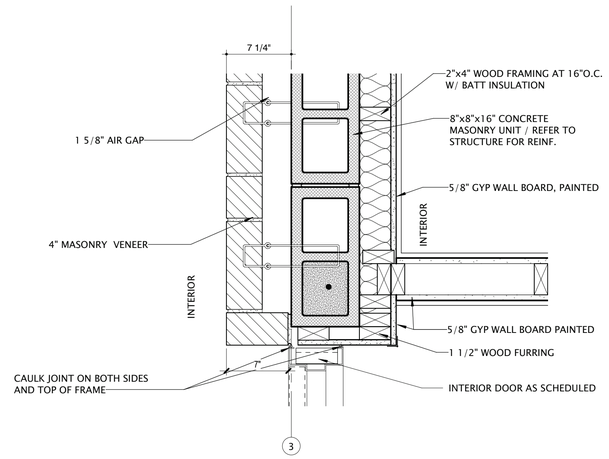

4 PLAN DETAIL @ INT STONE WALL OPENING
1 1/2" = 1'-0"

TEXAS PARKS & WILDLIFE

FORD POWELL &CARSON
Architects & Planners, Inc.
Architecture
Planning
Preservation
Interior Design
1138 East Commerce Street
San Antonio, Texas 78205
210/226-1246
FPC# 92705

REGISTERED ARCHITECT
RACHEL L. H. WRIGHT
20948
STATE OF TEXAS
Rachel Wright

TYLER STATE PARK
HEADQUARTERS REPLACEMENT PHASE 1
PROJECT NUMBER: 112741

DATE: 07/03/2020
DESIGNED BY: Designer
DRAWN BY: EK
REVIEWED BY: SG/RW
no. revision date

SHEET TITLE
PLAN DETAILS

SHEET NUMBER
A801

CONSTRUCTION DOCUMENTS

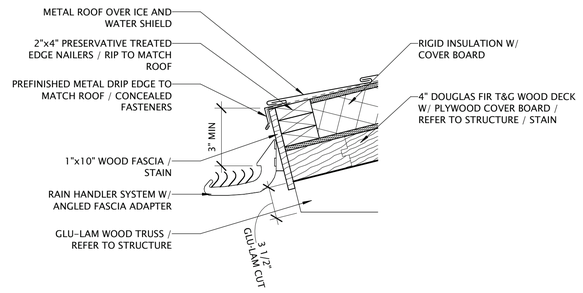

5 SECTION DETAIL @ GLUE LAM END CONDITION
1 1/2" = 1'-0"

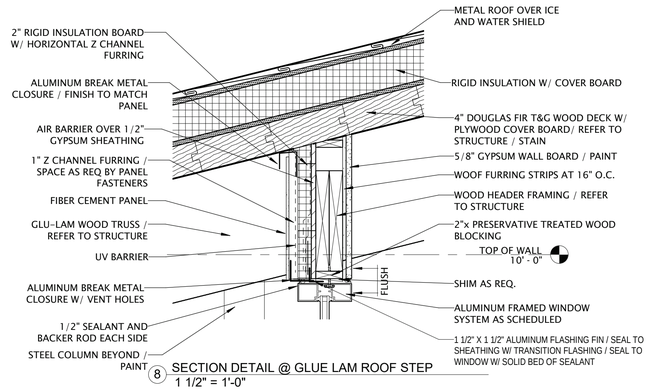

8 SECTION DETAIL @ GLUE LAM ROOF STEP
1 1/2" = 1'-0"

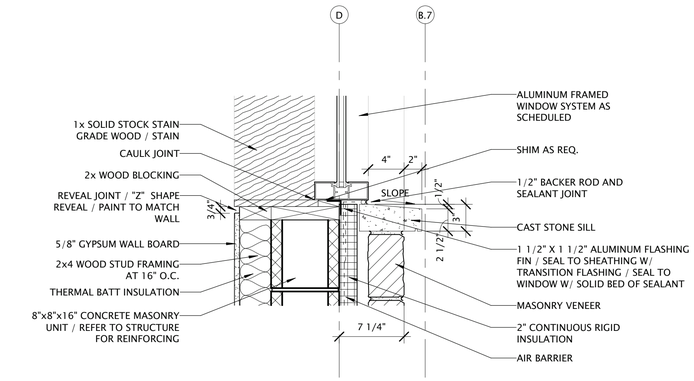

13 TYPICAL WINDOW SILL
1 1/2" = 1'-0"

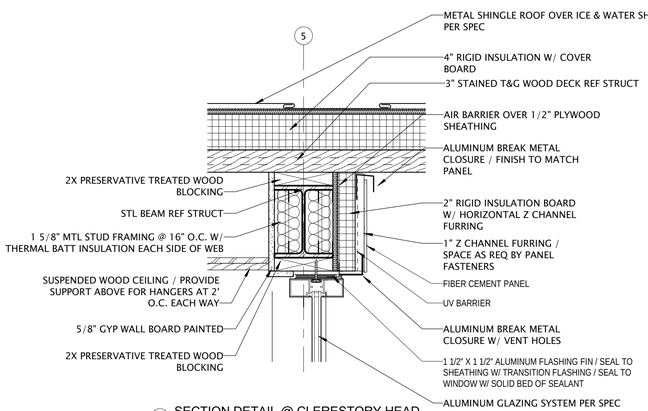

6 SECTION DETAIL @ CLERESTORY HEAD
1 1/2" = 1'-0"

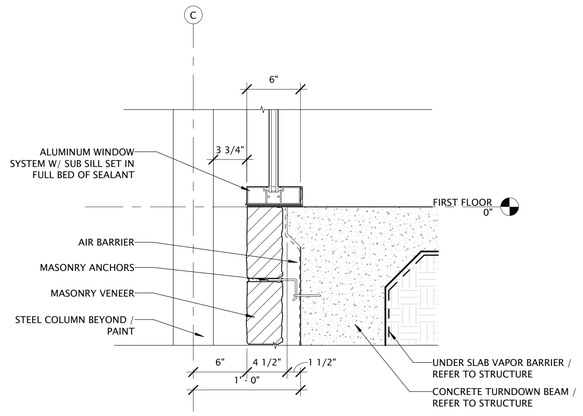

9 SECTION DETAIL @ CURTAIN WALL BASE
1 1/2" = 1'-0"

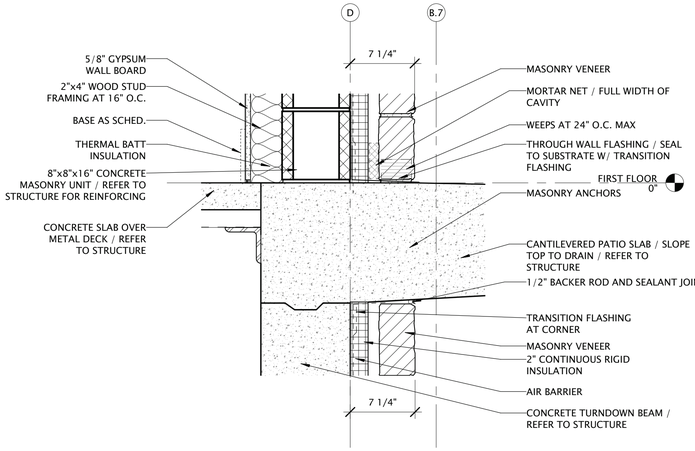

12 SECTION DETAIL
1 1/2" = 1'-0"

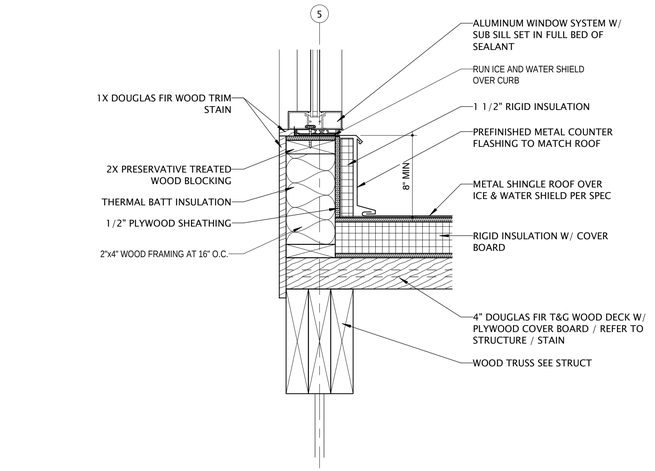

7 SECTION DETAIL @ CLERESTORY SILL
1 1/2" = 1'-0"

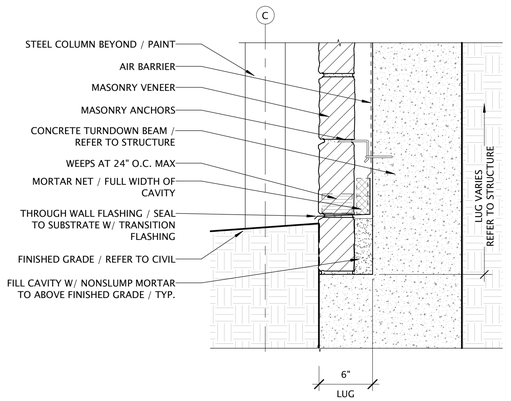

10 SECTION DETAIL @ RETAINING WALL STONE LUG
1 1/2" = 1'-0"

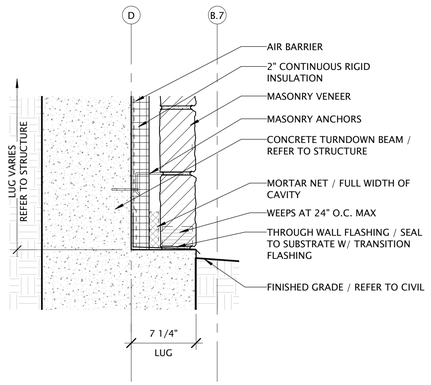

11 STONE LUG DETAIL
1 1/2" = 1'-0"

TEXAS PARKS & WILDLIFE

FORD POWELL & CARSON
Architects & Planners, Inc.
Architecture
Planning
Preservation
Interior Design
1138 East Commerce Street
San Antonio, Texas 78205
210/226-1246
FPC# 92705

REGISTERED ARCHITECT
RACHEL L. H. WRIGHT
20948
STATE OF TEXAS
Rachel Wright

TYLER STATE PARK

HEADQUARTERS REPLACEMENT PHASE 1

PROJECT NUMBER: 112741

CONSTRUCTION DOCUMENTS

DATE: 07/03/2020
DESIGNED BY: Designer
DRAWN BY: EK
REVIEWED BY: SG/RW

no.	revision	date

SHEET TITLE
SECTION DETAILS

SHEET NUMBER
A802

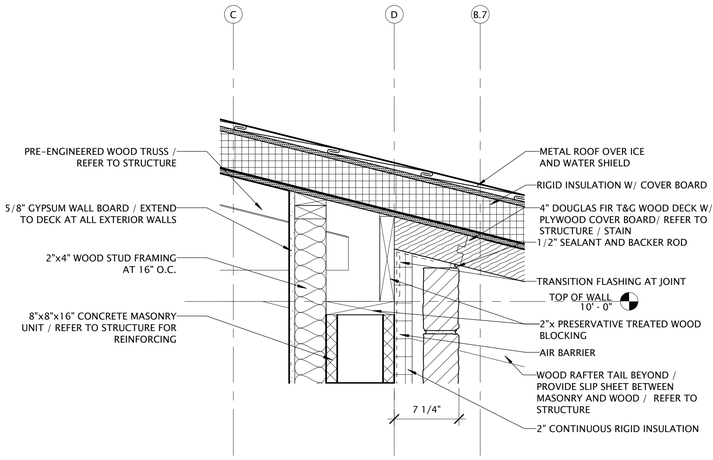

1 TRANSVERSE SECTION @ CONFERENCE / MECH - Callout 1 - Callout 5
1 1/2" = 1'-0"

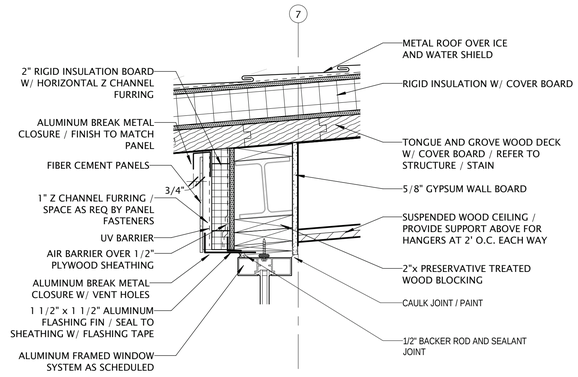

2 HEAD @ CLERESTORY
1 1/2" = 1'-0"

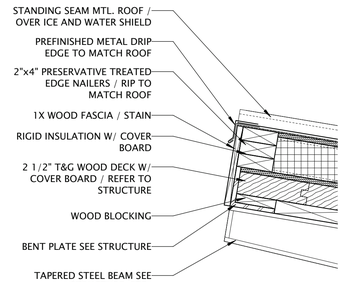

3 POP UP ROOF NORTH
1 1/2" = 1'-0"

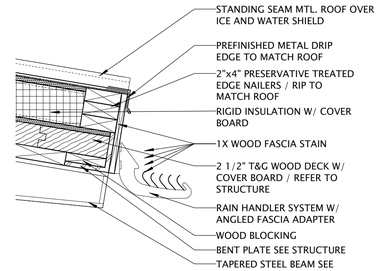

6 POP UP ROOF SOUTH
1 1/2" = 1'-0"

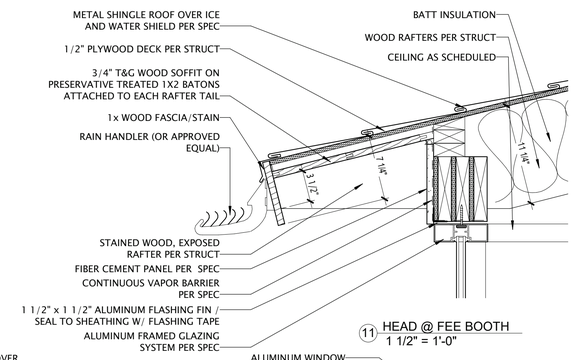

11 HEAD @ FEE BOOTH
1 1/2" = 1'-0"

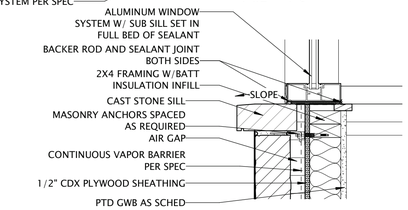

12 SILL @ FEE BOOTH
1 1/2" = 1'-0"

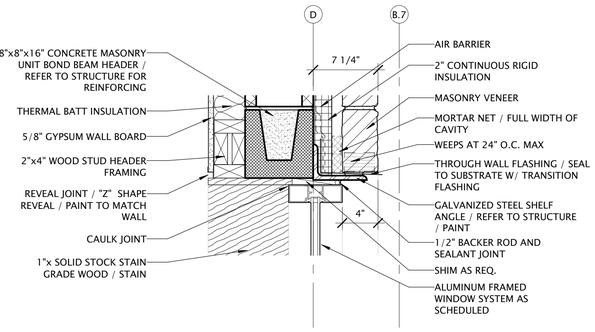

4 WINDOW HEAD @ STONE WALL
1 1/2" = 1'-0"

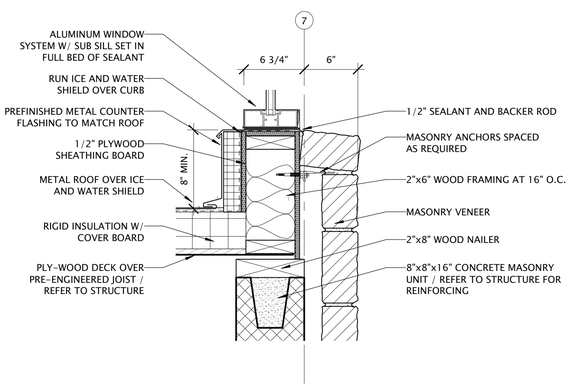

5 CURB @ CLERESTORY
1 1/2" = 1'-0"

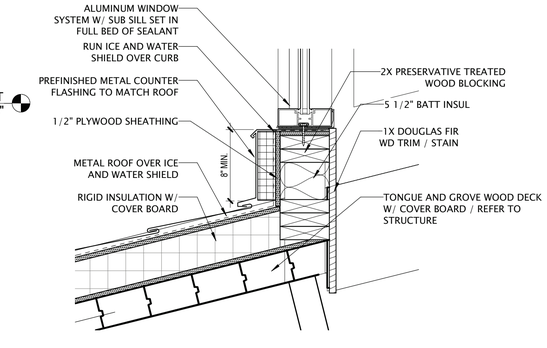

9 CLERESTORY NORTH HEAD
1 1/2" = 1'-0"

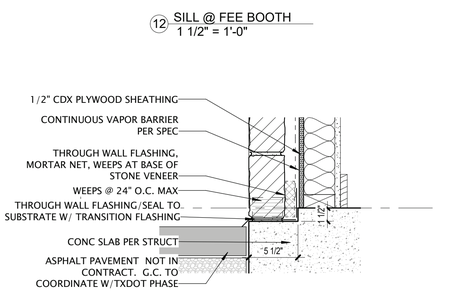

13 WALL BASE @ FEE BOOTH
1 1/2" = 1'-0"

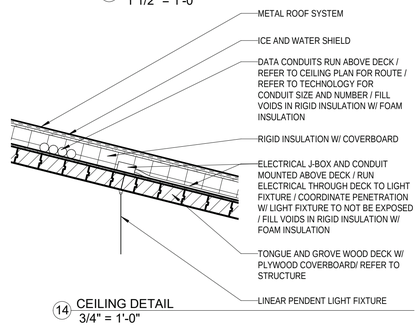

14 CEILING DETAIL
3/4" = 1'-0"

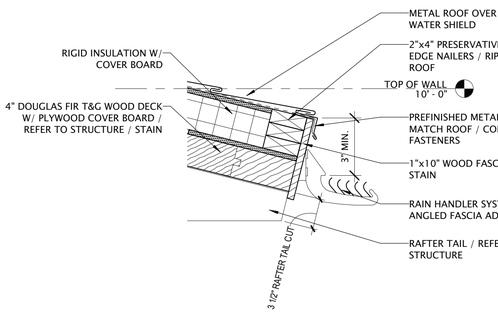

7 TYPICAL ROOF EDGE
1 1/2" = 1'-0"

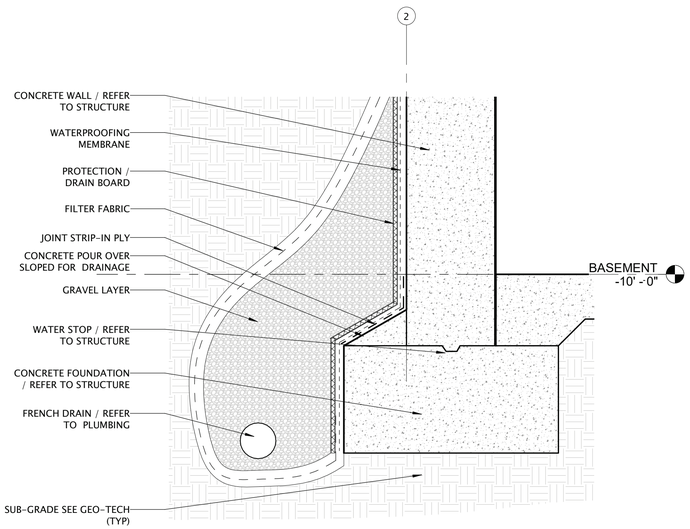

8 FRENCH DRAIN @ BASEMENT
1 1/2" = 1'-0"

10 CLERESTORY NORTH SILL
1 1/2" = 1'-0"

TEXAS PARKS & WILDLIFE

FORD POWELL &CARSON
Architects & Planners, Inc.
Architecture
Planning
Preservation
Interior Design
1138 East Commerce Street
San Antonio, Texas 78205
210/226-1246
FPC# 92705

REGISTERED ARCHITECT
RACHEL L. H. WRIGHT
20948
STATE OF TEXAS
Rachel Wright

TYLER STATE PARK
HEADQUARTERS REPLACEMENT PHASE 1
PROJECT NUMBER: 112741

DATE: 07/03/2020
DESIGNED BY: Designer
DRAWN BY: EK
REVIEWED BY: SG/RW

no.	revision	date

SHEET TITLE
SECTION DETAILS

SHEET NUMBER
A803

CONSTRUCTION DOCUMENTS

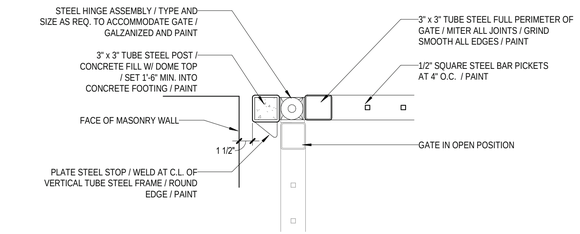

6 PLAN DETAIL - SWING GATE
1 1/2" = 1'-0"

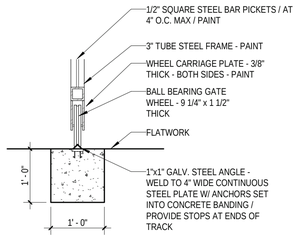

5 SECTION DETAIL - GATE TRACK
3/4" = 1'-0"

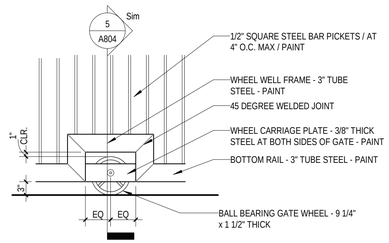

4 ELEVATION DETAIL - GATE WHEEL
3/4" = 1'-0"

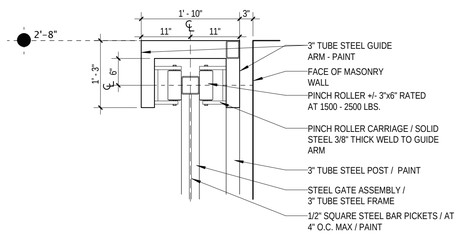

3 SECTION DETAIL - GUIDE ARM
3/4" = 1'-0"

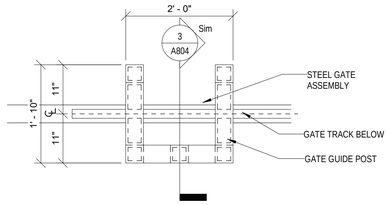

2 PLAN DETAIL - GUIDE POST
3/4" = 1'-0"

TYP. INTERIOR HOLLOW METAL HEAD

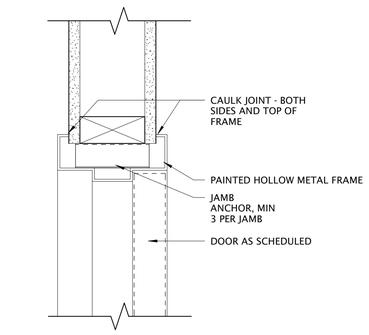

TYP. INTERIOR HOLLOW METAL JAMB

1 DOOR DETAILS
3" = 1'-0"

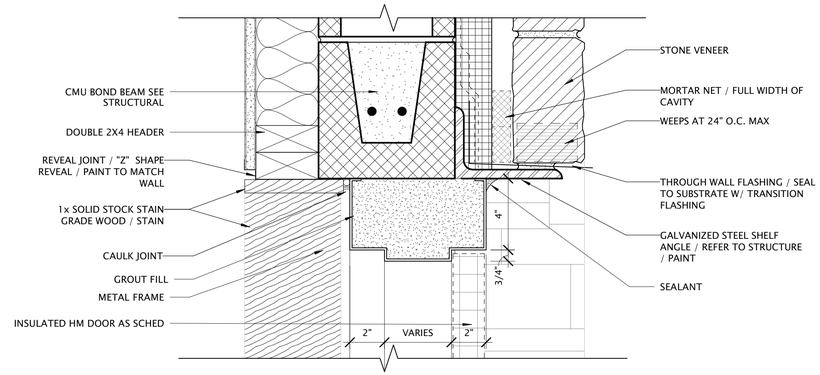

TYP. EXTERIOR HOLLOW METAL HEAD

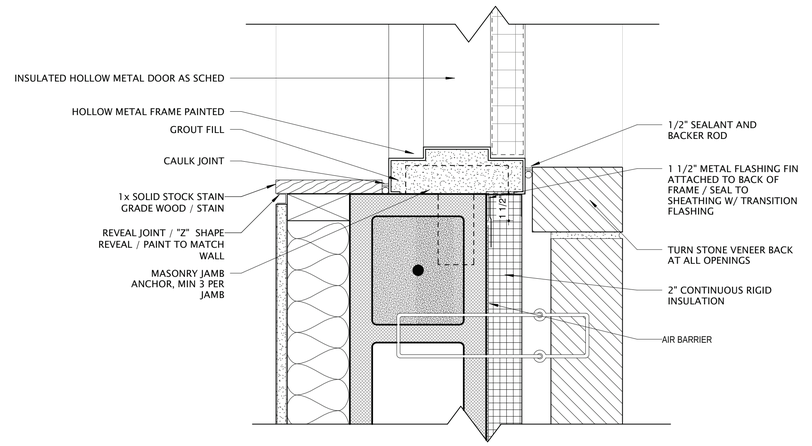

TYP. EXTERIOR HOLLOW METAL JAMB

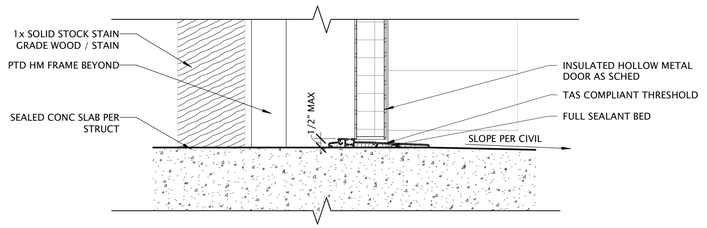

TYP. EXTERIOR HOLLOW METAL SILL

TEXAS PARKS & WILDLIFE

FORD POWELL &CARSON
Architects & Planners, Inc.
Architecture
Planning
Preservation
Interior Design
1138 East Commerce Street
San Antonio, Texas 78205
210/226-1246
FPC# 92705

REGISTERED ARCHITECT
RACHEL L. H. WRIGHT
20948
STATE OF TEXAS

TYLER STATE PARK
HEADQUARTERS REPLACEMENT PHASE 1
PROJECT NUMBER: 112741

DATE: 07/03/2020
DESIGNED BY: Designer
DRAWN BY: EK
REVIEWED BY: SG/RW

no.	revision	date

SHEET TITLE
DOOR DETAILS

SHEET NUMBER
A804

CONSTRUCTION DOCUMENTS

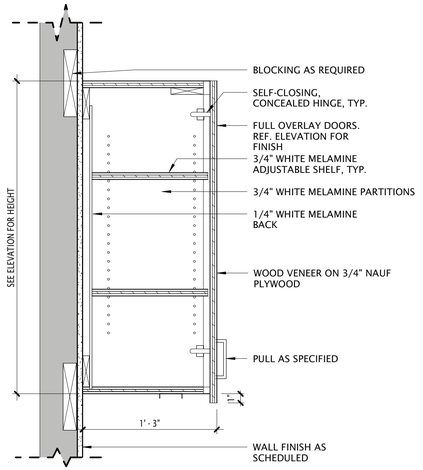

1 CASEWORK DETAILS - UPPER CABINET
1 1/2" = 1'-0"

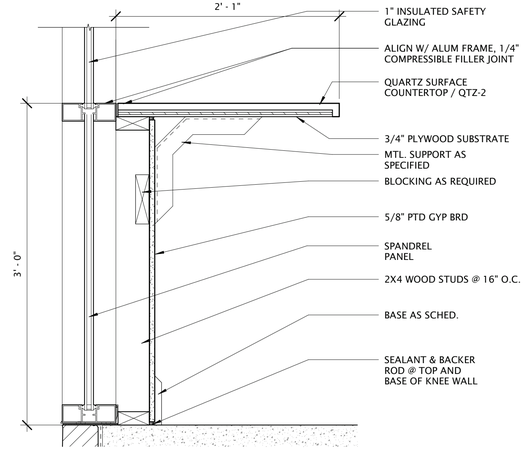

2 CASEWORK DETAIL - @ GLAZING
1 1/2" = 1'-0"

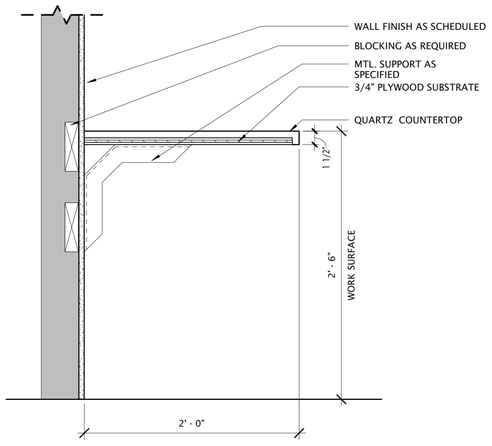

3 CASEWORK DETAILS - WORK SURFACE
1 1/2" = 1'-0"

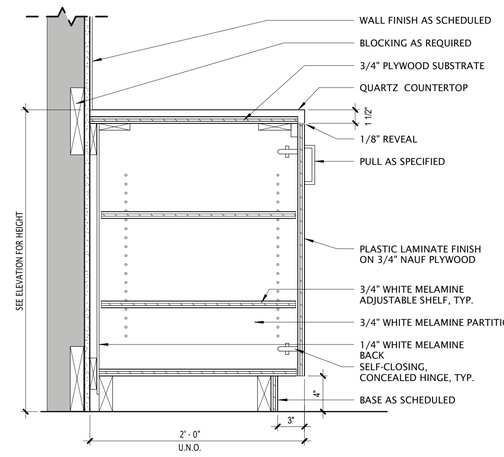

4 CASEWORK DETAILS - BASE CABINET
1 1/2" = 1'-0"

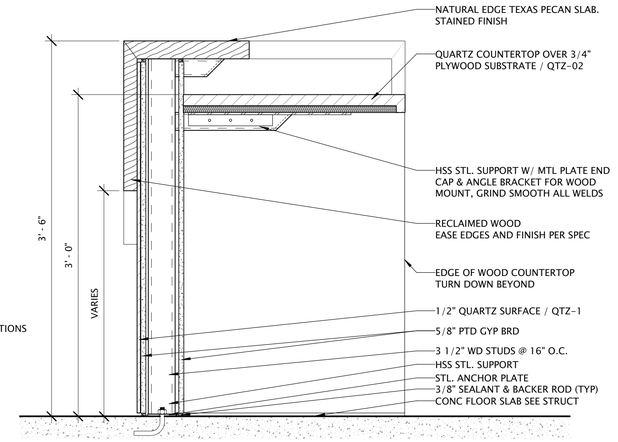

5 LOBBY COUNTER DETAIL @ HIGH TOP
1 1/2" = 1'-0"

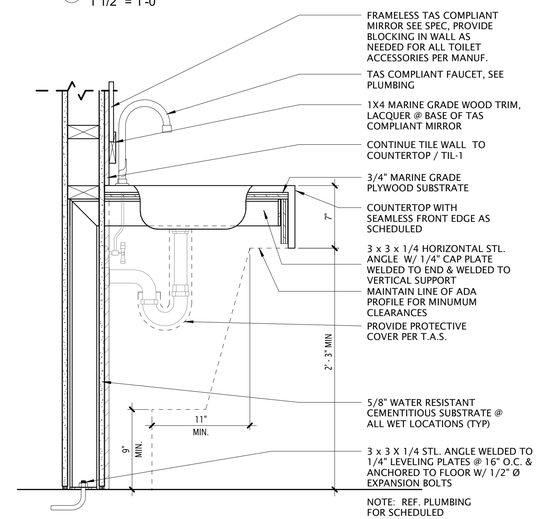

6 CASEWORK DETAILS - LAVATORY
1 1/2" = 1'-0"

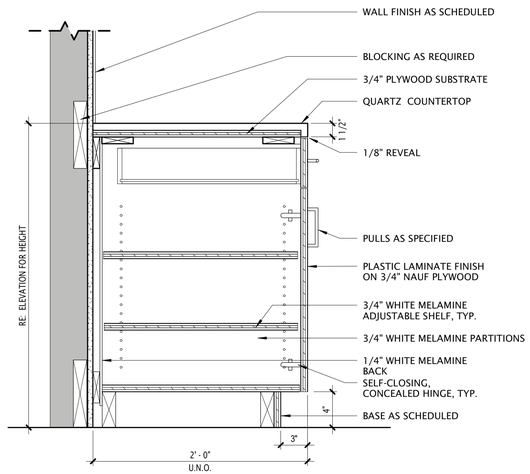

7 CASEWORK DETAILS - BASE W/ DRAWER
1 1/2" = 1'-0"

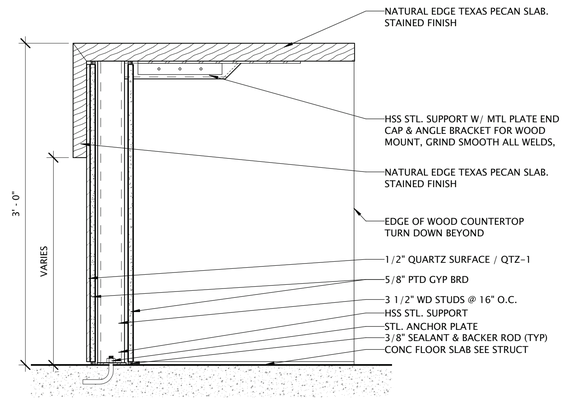

8 LOBBY TAS COUNTER DETAIL
1 1/2" = 1'-0"

TEXAS PARKS & WILDLIFE

FORD POWELL &CARSON
Architects & Planners, Inc.
Architecture
Planning
Preservation
Interior Design
1138 East Commerce Street
San Antonio, Texas 78205
210/226-1246
FPC# 92705

REGISTERED ARCHITECT
RACHEL L. H. WRIGHT
20948
STATE OF TEXAS
Rachel Wright

TYLER STATE PARK
HEADQUARTERS REPLACEMENT PHASE 1
PROJECT NUMBER: 112741

DATE: 07/03/2020
DESIGNED BY: Designer
DRAWN BY: EK
REVIEWED BY: SG/RW

no.	revision	date

SHEET TITLE
CASEWORK DETAILS

SHEET NUMBER
A805

CONSTRUCTION DOCUMENTS



1 EXTERIOR - ENTRY
12" = 1'-0"



2 EXTERIOR - PARKING AREA
12" = 1'-0"



3 EXTERIOR - BRIDGE
12" = 1'-0"



4 INTERIOR - LOBBY
12" = 1'-0"

RENDERINGS SHOWN FOR REFERENCE ONLY

TEXAS PARKS & WILDLIFE

FORD POWELL &CARSON
Architects & Planners, Inc.
Architecture
Planning
Preservation
Interior Design
1138 East Commerce Street
San Antonio, Texas 78205
210/226-1246
FPC# 92705

REGISTERED ARCHITECT
RACHEL L. H. WRIGHT
20948
STATE OF TEXAS

TYLER STATE PARK
HEADQUARTERS REPLACEMENT PHASE 1
PROJECT NUMBER: 112741

DATE: 07/03/2020
DESIGNED BY: Designer
DRAWN BY: EK/SG
REVIEWED BY: SG/RW

no.	revision	date

SHEET TITLE
RENDERINGS

SHEET NUMBER
A901

CONSTRUCTION DOCUMENTS

COORDINATION

1. Only large openings in structural framing members are shown on the structural drawings. However, all sleeves, embeds, inserts, openings and frames that are necessary for the work shall be provided. The Contractor shall coordinate with all trades sizes, locations and placement. All openings and embedded items which have an effect on the structure shall be submitted to the Engineer for review.

2. Refer to Architectural, Mechanical, Electrical and Plumbing drawings for floor elevations, location of depressed or elevated floor areas, slopes and drains.

3. Contractor shall coordinate the requirements for building equipment supported on or from the structure. Submittals identify all equipment including size, dimensions, clearances, accessibility, weights and reactions. Any deviations from specified equipment shall be noted on the submittals.

4. Shop drawings shall be prepared for all structural items and submitted for review by the Engineer. Contract Drawings shall not be reproduced and used as shop drawings. All items deviating from the Contract Drawings or from previously submitted shop drawings shall be noted.

5. The details designated as "Typical Details" apply generally to the Drawings in all areas where conditions are similar to those described in the detail

SUBSTITUTIONS

1. All requests for substitutions of materials or details shown in the contract documents shall be submitted for approval during the bidding period. Once bids are accepted, proposed substitutions will be considered only when they are officially submitted with an identified savings to be deducted from the contract.

CODES

1. IBC 2015 International Building Code with City of Tyler Amendments.

2. Wind and Earthquake Loads: Minimum Design Loads for Building and Other Structures, American Society of Civil Engineers, ASCE 7-10.

3. Structural Concrete: Building Code Requirements for Reinforced Concrete, American Concrete Institute, ACI 318-14.

4. Structural Masonry: Building Code Requirements for Masonry Structures, reported by the Masonry Standards Joint Committee, ACI 530-13/ASCE 5-13/TMS 402-13.

5. Structural Steel: Steel Construction Manual, American Institute of Steel Construction, Fourteenth Edition. Specification for Structural Steel Buildings, AISC 360-10.

6. Wood Framing: National Design Specification (NDS) For Wood Construction with 2015 Supplement, American Forest and Paper Association, AF&PA NDS-2015, and Special Design Provisions for Wind and Seismic, ANSI/AF&PA SDPWS-15.

7. Prefabricated Composite Wood Products: Products shall be proven by testing as demonstrated either by ICBO and NRB acceptance or through a test program meeting requirements of ASTM D 5055 for wood I-joists and ASTM D 5456 for Structural Composite Lumber (SCL).

8. Prefabricated Metal-plate-connected Wood Trusses: National Design Standard for Metal-plate-connected Wood Truss Construction, TPI 1-2014.

SUBMITTALS

1. Shop drawings shall be prepared for all structural items and submitted for review by the Engineer. Contract Drawings shall not be reproduced and used as shop drawings. All items deviating from the Contract Drawings or from previously submitted shop drawings shall be clouded.

2. The contractor shall review shop drawings for compliance with the contract documents and shall certify that he has done so by a stamp noting that the drawings have been "Approved" and which bears the signature (or initials) of an authorized representative of the contractor and the date. Submittals which do not reflect the contractor's approval, signature and date will be returned without review.

3. The contractor shall be responsible for delays caused by rejection of inadequate shop drawings.

4. Where review and return of shop drawings is required or requested, the engineer will review each submittal and, where possible, return within 2 weeks of receipt.

5. Corrections or comments on shop drawings or manufacturer's data sheets do not relieve the contractor from compliance with requirements of the plans and specifications. The engineer's review is for general conformance with the requirements of the contract documents. The contractor is responsible for confirming and correcting all quantities and dimensions, selecting fabrication processes and techniques of construction, and coordinating his work with that of all other contractors.

6. Refer to individual sections for specific submittal requirements.

EXCAVATION PROTECTION

1. The sides of all excavations greater than 5'-0" in depth shall be laid back to a slope of 3 horizontal to 1 vertical, unless the following applies:

   a. A steeper slope is allowed by the geotechnical engineer for the particular location and site conditions in question.

   b. A retention system is indicated on the Contract Drawings.

   c. An alternative protective system is submitted by the Contractor and allowed by the Owner.

2. Contractor shall submit Drawings and calculations sealed by a Registered Engineer licensed in the State of Texas for the design of any alternative protective systems. Alternative protective systems shall be designed to resist the soil pressures stipulated in the project geotechnical report prepared by Terracon, Report #CM195066, dated January 27, 2020. In addition, the design shall consider surcharges created by construction equipment, excavation spoil, and other surface encumbrances.

3. Contractor shall comply with all Occupational Safety and Health Administration standards and all other regulatory agency standards regarding excavation safety.

DESIGN LOADS

1. Live Loads

a.	Office (not including partitions)	50 psf
b.	Public areas, corridors, lobbies	100 psf
c.	Mechanical Rooms	150 psf
d.	Storage (minimum)	125 psf
e.	Roof	20 psf
f.	Restrooms	50 psf
g.	Partition at areas with 80 psf live load or less	15 psf

2. Dead Loads include the self weight of the structural elements and the following superimposed loads:

a.	Ceiling, Mechanical, and roofing at roof	15 psf
	i) VAV units	60 lb., max.
b.	Ceiling and Mechanical at floor	5 psf
c.	Access flooring	10 psf

3. Wind Loads

a. Wind Lateral Load on Structural Frame is based on the following:

i)	*Ultimate* Design Wind Speed (3-sec. gust), V_{ult}	115 mph
	Nominal Design Wind Speed, V_{asd}	90 mph
ii)	Risk Category	II
iii)	Wind Exposure Category	C
iv)	Internal Pressure Coefficient, GC_{pi}	±0.18
v)	Component & Cladding *Ultimate* Design Pressures:	

Effective Area:	≤ 10 ft²	(Overhangs)
Zone 1	+17.6 psf; -27.9 psf	+16.0 psf; -23.3 psf
Zone 2	+17.6 psf; -48.6 psf	+16.0 psf; -56.9 psf
Zone 3	+17.6 psf; -71.9 psf	+16.0 psf; -95.7 psf
Zone 4	+30.5 psf; -33.1 psf	
Zone 5	+30.5 psf; -40.8 psf	

Effective Area:	50 ft²	(Overhangs)
Zone 1	+16.0 psf; -26.1 psf	+16.0 psf; -21.5 psf
Zone 2	+16.0 psf; -39.6 psf	+16.0 psf; -56.9 psf
Zone 3	+16.0 psf; -61.0 psf	+16.0 psf; -74.0 psf
Zone 4	+27.3 psf; -29.9 psf	
Zone 5	+27.3 psf; -34.5 psf	

Effective Area:	>100 ft²	(Overhangs)
Zone 1	+16.0 psf; -25.3 psf	+16.0 psf; -20.7 psf
Zone 2	+16.0 psf; -35.7 psf	+16.0 psf; -56.9 psf
Zone 3	+16.0 psf; -56.4 psf	+16.0 psf; -64.6 psf
Zone 4	+25.9 psf; -28.5 psf	
Zone 5	+25.9 psf; -31.7 psf	

NOTE:
Zone 1 = Interior roof area not in Zones 2 or 3.
Zone 2 = Perimeter roof area not in Zone 3 (3'-10" strips).
Zone 3 = Corner roof areas where Zone 2 strips intersect.
Zone 4 = Wall areas not in Zone 5.
Zone 5 = Wall corner areas (3'-10" strips).

b. Calculate the effective area for each component & cladding element, as defined by ASCE 7, depending on length and location. Effective area shall be the maximum of the following:

Effective Area = Length x Tributary Width (OR) Length x (Length/3)

c. Interpolation of uplift pressures is allowed between effective areas.

4. Roof Snow Loads

a.	Ground snow load	5 psf
b.	Additional surcharge snow drift load at maximum	27 psf
	i) Width over custom trusses	7'-6"
	ii) Width over pre-fab trusses (by others)	see plan

5. Earthquake Loads

a. Seismic Lateral Load on Structural Frame is based on the following:

i)	Seismic Importance Factor, I	1.00
ii)	Risk Category	II
iii)	Mapped Spectral Response Accelerations	
	S_S	0.10g
	S_1	0.06g
iv)	Site Class	D
v)	Spectral Response Coefficients	
	S_{DS}	0.107g
	S_{D1}	0.096g
vi)	Seismic Design Category	B
vii)	Basic Seismic-Force-Resisting System:	Ordinary reinforced masonry shear walls
viii)	Design Base Shear	0.052*W kips
ix)	Seismic Response Coefficient, C_S	0.052
x)	Response Modification Factor, R	2
xi)	Analysis Procedure	Equivalent Lateral Force

6. Loading for mechanical rooms and kitchens are based on the weights of equipment and concrete pads as indicated on the contract documents. Any revisions in equipment type, size, or quantity shall be reported to the Architect immediately for verification of the structural design.

TESTING LABORATORY SERVICES

1. Work specified herein shall be performed by a qualified independent Testing Laboratory, selected and paid by the Owner.

2. Pier drilling operation: Make continuous inspections to determine that the proper bearing stratum is obtained and utilized for bearing and that the shafts are clean and dry before pouring concrete.

3. Filling and Backfilling operation:

   a. Analyze backfill samples delivered by the contractor to determine compliance with gradation and quality requirements of the geotechnical report.

   b. Make in place compaction tests for moisture content, moisture density relationship, and density of materials in place. Perform test once for each 2500 square feet of area per lift with a minium of 3 tests per lift.

4. Footing excavation: Inspect the excavations to determine that the proper bearing stratum is obtained and utilized for bearing and that excavations are properly clean and dry before concrete is placed.

5. Concrete inspection and testing:

   a. Secure composite samples of concrete at the jobsite in accordance with ASTM C172.

   b. Mold and cure three specimens from each sample in accordance with ASTM C31. Test specimens in accordance with ASTM C39. Two specimens shall be tested at 28 days for acceptance and one shall be tested at seven days for information.

   c. Perform one strength test (three cylinders) for each pour.

   d. Make one slump test for each set of cylinders following the procedural requirements of ASTM C143 and C172.

   e. Determine total air content of air entrained concrete in accordance with ASTM C231. Perform one test for each strength test.

6. Concrete Reinforcement: Inspect all concrete reinforcing steel and embedded metal assemblies prior to placement of concrete for compliance with Contract Documents and shop drawings. All instances of non-compliance shall be immediately brought to the attention of the contractor for correction, and if uncorrected, reported to the engineer.

7. Structural Masonry: Provide a qualified masonry inspector to inspect all masonry work on a periodic basis. Inspect work in progress at least once for every 5000 square feet of wall laid, but not less than once each day.

   a. Compressive test for grout: Mold and cure three 3" diameter by 6" tall cylinders from each sample in accordance with ASTM C31. Test cylinders in accordance with ASTM C39. Two specimens shall be tested at 28 days for acceptance and one shall be tested at seven days for information.

   b. Prism Tests: Prisms of hollow masonry units shall be 16" long by 16" high. Apply mortar to face shell only. Build brick prisms one brick by five bricks high. Test three specimens of each type pf masonry unit for each 5000 square feet of wall placed.

   c. Inspections: Inspect the placement of reinforcing, mortar and grout mixing operations, bedding of mortar for each type of unit and placing of units.

8. Expansion Anchors: Provide continuous inspection of expansion bolt installation to ensure that holes are of the specified size, and that bolts are properly installed including application of minimum installation torques.

9. Structural steel: Field inspection of proper erection of all members, visual examination of all field welding, visual inspection of all bolts, inspection of all shop fabricated members upon arrival at the jobsite for conformance with accepted fabrication and erection drawings, verification of welder's certificates.

STRUCTURAL MASONRY

1. Concrete masonry units shall be hollow load bearing Type N-1 units which conform to ASTM C90, with a minimum compressive strength of 1900 psi.

2. Minimum compressive prism strength of the masonry (f'm) shall be 1500 pounds per square inch when tested at 28 days.

3. Chases shall be built in and not cut in. Chases shall be plumb and shall be minimum one-unit length from jambs of openings. Anchors, wall plugs, accessories and other items to be built in shall be installed as the masonry work progresses. All cutting and fitting of masonry, including that required to accommodate the work of other sections shall be done by masons with masonry saws.

4. Mortar shall conform to ASTM C270, Type S, by proportion. Masonry cement shall not be used.

5. Coarse grout shall conform to ASTM C476, by proportion, with a maximum aggregate size of 1/2".

6. Reinforce concrete masonry unit joints with ladder type hot dip galvanized cold-drawn steel conforming to ANSI/ASTM A82, with 3/16 inch side rods with no. 9 gauge cross rods. Space joint reinforcing at 16" o.c. unless noted otherwise. Lap joint reinforcing 14" at splices. Joint reinforcing shall be discontinuous at control and expansion joints.

7. Provide reinforced and grouted vertical cells at 48" on center unless noted otherwise on the drawings. Reinforcing shall consist of #4 bars. Grout and reinforce the first cell at the ends of walls and at corners.

8. Reinforce each cell of concrete masonry units each side of framed openings with 1-#4 vertical. Grout cell full height of wall.

9. Lap reinforcing bars in grouted masonry 36 bar diameters minimum at foundations and 48 bar diameters at all other locations, unless noted otherwise. Except at foundations, splices in reinforcing shall be staggered so that not more than 1/2 of all bars are spliced at the same location.

10. Z-ties shall be manufactured from 3/16" diameter cold drawn wire. Ties shall be hot dip galvanized, 6" long with a 2" hook at each end, unless noted otherwise.

11. Provide 1" clear cover between ties or longitudinal reinforcing and the inside face of masonry used as forms in grouted beams, pilasters and columns.

CONTROLLED BACKFILL

1. Backfill material shall consist of granular soils as outlined in the geotechnical report, "Lateral Earth Pressure Design Parameters." Prior to any filling operations, sames of the proposed fill materials should be obtained by Terracon for laboratory moisture-density testing.

2. Fill shall be placed in lifts not to exceed 8 inches.

3. Fill shall be compacted at the optimum moisture content (-1% to +3%) to at least 95 percent of the maximum dry density per ASTM D698.

4. Compaction and moisture content of controlled backfill shall be verified by an independent testing laboratory.

5. The surcharge from construction equipment behind retaining walls, including compaction equipment, shall not exceed 100 psf. Refer to the Slab On Grade notes for additional information on construction loading in the vicinity of walls.

6. Backfill material shall not be placed against foundation walls until all supporting slabs, beams, struts, etc., have attained their 28 day design strength unless proper bracing is installed.

7. Where backfill is required on both sides of a structure or building element, backfill shall be placed simultaneously along both sides so that the backfill height on one side does not exceed the height on the opposite side by more than 4'-0".

8. Design of basement and retaining walls is based on equivalent hydrostatic pressure of 70 pcf, assuming free draining backfill and use of perforated drain pipe in accordance with the geotechnical report prepared by Terracon, Report #CM195066, dated January 27, 2020.

BUILDING PAD PREPARATION

1. Structural fill material shall have a USGS Classification of Clayey Sand (SC), with the following parameters: 4 ≤ PI ≤ 18, LL = 40% or less, and less than 45% passing the No. 200 sieve. Prior to any filling operations, sames of the proposed fill materials should be obtained by Terracon for laboratory moisture-density testing.

2. Prior to placing fill material, remove all organic and other deleterious material from the existing subgrade for a distance of 5'-0" beyond building line, in addition to complete stripping of 6 inches of the topsoil. The subgrade should then be proofrolled and weak zones should be evaluated and addressed by the geotechnical engineer. Excessively wet or dry material should either be removed or moisture conditioned and recompacted, in accordance with the geotechnical report.

3. Structural fill shall be placed in 8 inch or less loose lifts, watered as required and compacted to a minimum of 95 percent of the maximum dry density as defined in ASTM D 698 at a moisture content within ±3 percent of the optimum moisture content.
   A. When hand-guided equipment is used, loose lifts shall be 4 inches or less.
   B. Where fill is greater than 5 feet, compact to 98 percent of maximum dry density.
   C. Refer to the geotechnical report for requirements for high plasticity cohesive fill and for fill consisting of coarse sand or gravel material, uniform gradation, and/or low fines content.

4. Compaction and moisture content of subgrade and each lift of structural fill shall be inspected and approved by a qualified engineering technician, supervised by a Geotechnical Engineer.

5. Provide a 1 foot thick clay cap at perimeter of building to protect pad from moisture intrusion. Cap can be formed of on-site clays, placed in 6" lifts, and compacted to 90 percent of the maximum dry density as defined by ASTM D 698 (Standard Proctor Test). Cap shall slope away from building.

6. Slab on grade shall be placed over 6 feet of structural fill at the basement level and 7.5 feet of structural fill at the first floor level.

7. Provide a 15 mil polyolefin vapor barrier. Place vapor barrier in accordance with manufacturer's recommendation on top of structural fill.

8. Building pad preparation information is based on a geotechnical report provided by Terracon, Report #CM195066, dated January 27, 2020.

CONCRETE FOOTINGS

1. Concrete footing design is in accordance with the geotechnical report by Terracon, Report #CM195066, dated January 27, 2020. Allowable net bearing capacity is as noted below:
   A. 2,000 psf for isolated footings
   B. 1,600 psf for continuous footings at the first floor level
   C. 1,000 psf for continuous footings at the basement level

2. Bearing stratum shown on the footing details is compacted structural fill to be verified by Terracon.

3. Footings not specifically located on the plan shall be located on centerline of pilaster or column above. Where no pilaster or column occurs, locate on centerline of wall or beam.

4. Provide dowels from footings into concrete above using same bar size and number as shown for pilaster or column above. Where no pilaster or column occurs, use 4-#7 dowels. Extend dowels 30 bar diameters into pier and wall, beam, pilaster or column u.n.o.

5. Elevation of top of plinths/footings, unless noted otherwise on drawings, is at the bottom of the deepest intersecting beam or wall supported by the footing.

6. Footing excavations shall be to neat lines and shall be free of loose or wet materials.

7. Footing reinforcing and concrete shall be placed immediately after excavations are complete; in no case shall a footing be excavated that cannot be placed by the end of the workday.

8. See plans and schedules for footing sizes, reinforcing and depths.

9. Reinforcing steel shop drawings shall include placing drawings for templates to set dowels in footings.

10. All footings shall be inspected by a representative of Terracon in order to ensure that the proposed bearing material has been reached in accordance with the recommendations given in the geotechnical report and that the footing has been constructed to specified size, with detailed reinforcing, and to specified tolerances.

TEXAS PARKS & WILDLIFE

FORD POWELL &CARSON
Architects & Planners, Inc.
Architecture
Planning
Preservation
Interior Design
1138 East Commerce Street
San Antonio, Texas 78205
210/226-1246
FPC# 92705

STATE OF TEXAS
KARINA TRIBBLE
109642
LICENSED PROFESSIONAL ENGINEER
7/3/20

aec Architectural Engineers Collaborative
Austin, Tx 78756
Lamar Central
3800 N. Lamar Blvd.
Suite 320
P 512.472.2111
www.aecollab.com
F 5985
FIRM REG #:
17007
AEC JOB#:

TYLER STATE PARK
HEADQUARTERS REPLACEMENT PHASE 1
PROJECT NUMBER: 112741

DATE: 07/03/2020
DESIGNED BY: KT
DRAWN BY: EV
REVIEWED BY: KT

no.	revision	date

SHEET TITLE
GENERAL NOTES

SHEET NUMBER
S100

CONSTRUCTION DOCUMENTS

STRUCTURAL STEEL

1. Structural Steel shall conform to ASTM A992 or A572, grade 50 except where A36 is noted on plan, except that miscellaneous plates, angles, and channels may be A572, grade 50 or A36. Steel pipe shall conform to ASTM Specification A 501 or ASTM A 53, Type E or S, Grade B. Steel tube shall conform to ASTM Specification A 500, Grade B, F, 46 ksi or ASTM A1085.
2. Anchor rods shall conform to ASTM F1554 grade 36 ksi.
3. Column base plates shall be grouted with a non-shrink, high strength nonmetallic grout conforming to ASTM C827, and shall have a compressive strength at 28 days of 5000 psi. Pre-grouting of base plates will not be permitted.
4. Studs shall be Nelson studs type S3L (Fu=65 ksi) or acceptable equal. Studs shall be made from cold drawn steel conforming to ASTM A108.
5. Deformed bar anchors shall be Nelson D2L or KSM deformed bar anchors (or acceptable equal) and shall be made from cold drawn wire per STM A490 conforming to ASTM A108 with minimum yield strength of 70 Ksi. Anchors shall be automatically and welded with suitable welding equipment in the shop or in the field. Welding shall be in accordance with the recommendations of Nelson Stud Company or KSM Welding Company.
6. Structural steel detailing, fabrication, and erection shall conform to the AISC "Specification for Steel Buildings" and the AISC "Code of Standard Practice for Steel Buildings and Bridges". Typical connection details are indicated in the drawings. The fabricator shall prepare drawings based on these details. If alternate connection designs are used, the fabricator shall have a registered professional engineer prepare the connection designs. Such connection shall bear the engineer's seal and shall be submitted with shop drawings.
7. Splicing of structural steel members is prohibited without prior approval of the Engineer as to location and type of splice to be made. Any member having splice not shown and detailed on shop drawings will be rejected.
8. All welds denoted as moment connection or full penetration weld shall be ultrasonically or x-ray certified by an independent testing agency.
9. Contractor shall coordinate structural steel fireproofing requirements. All interior structural steel, including steel joists, scheduled or indicated to receive spray applied fireproofing shall be delivered to the project site unprimed. Steel exposed to corrosive conditions after installation shall be primed with a protective coating which does not diminish the bond between the spray applied fireproofing, and the steel substrate. Any primer, and/or coating applied to structural steel shall be approved for use in the applicable U.L. Fire Resistance Assembly used on the project. Contractor shall protect any unprimed structural steel from detrimental effects of corrosion, as required, until the steel is enclosed and protected by the new construction.
10. Shop painting: Paint structural steel with one coat of manufacturer's standard red oxide primer applied at a rate to provide a uniform dry film thickness of 2.5 mils.
11. Contractor must fabricate and erect steel in accordance with OSHA Safety requirements, 29 CF part 1926 Safety for Steel Erection, Final Rule.
12. Submittal: Provide drawings showing details for fabrication and shop assembly of members, erection plans, and details. Include details of connections, camber, weld profiles and sizes and spacing. Shop and erection drawings shall not be made using reproductions of the contract drawings.

STRUCTURAL STEEL CONNECTIONS

1. Welding shall conform to ANSI/AWS D1.1, latest edition.
2. Bolts conform to ASTM A325. Bolts shall be designed using values for bearing type bolts with thread allowed in the shear plane.
3. Structural steel connections not specifically detailed on the Drawings shall be designed and detailed by the Contractor under the direct supervision of a registered engineer licensed in the State of Texas. Sealed calculations for all connections designed by the Contractor shall be submitted for the Architect's files. Connections that meet the requirements and assumptions presented in our schematic connection details and table can be used at the discretion of the Contractor. The Contractor shall take full responsibility in confirming that the connection tables are used within their limitations and assumptions outlined in the details and notes.
4. Beam connections shall be designed and detailed as follows, unless noted otherwise on the Drawings:
   a. Connections shall be AISC type 2 simple framing connections.
   b. In general, shop connections shall be bolted or welded and field connections shall be bolted.
   c. Where indicated, connections shall be designed for the scheduled shear force, the shear force indicated on the Drawings as "V= ", and the horizontal force indicated as "H= ".
   d. If not indicated on the Drawings, connections shall be designed for 55 percent of the total load capacity for the beam span shown in the beam tables in Part 3 of the AISC Manual, fourteenth edition.
   e. The minimum number of rows of bolts shall be 1/6 of the beam depth with any fraction be rounded to the next higher number.
   f. Bolts shall be "snug tight", u.o.n.
   g. Short slotted holes shall be permitted provided washers are installed in accordance with AISC requirements. Washers shall be hardened where A325 bolts are utilized. Long slotted holes are not permitted unless the connection is designed as slip-critical or as specified otherwise.
5. For connections not specifically addressed by these notes or the Drawings, provide fillet welds at all contact surfaces sufficient to develop the tensile strength of the smaller member at the joint.
6. Moment connections indicated on Drawings as " ◀ ▶ " or "MC" shall be welded to develop the full capacity of the member on both sides of supporting member.
7. Roof edges angles shall be continuous and shall be spliced only at supports. Splices shall be butt-welded to develop full capacity of the member.
8. Fillet welds with no size specified shall be 3/16", or minimum size required by AISC, whichever is larger.

EXPANSION ANCHORS

1. Expansion anchors shall only be used where specified on the drawings. The contractor shall obtain approval from the engineer of record prior to using the anchors for missing or misplaced cast-in-place anchors.
2. Unless otherwise noted, size and depth of the expansion anchors specified in the drawings are based on the Hilti Fastening System products - Hilti Kwik Bolt 3 for general applications, and Kwik Bolt TZ for overhead applications.
3. Substitution of expansion anchor products with similar capacities shall be submitted to the engineer of record for approval.
4. Expansion anchors of the size and embedment shown on the Drawings shall be installed in accordance with the Contract Documents, the manufacturer's recommendations, and the manufacturer's current ICBO report for the anchor. If conflicts exist between these referenced documents, the most stringent requirements shall govern.
5. The Contractor shall locate all existing reinforcing steel and other embedded items contained in the concrete using non-destructive methods and shall position anchor locations to avoid conflicts with existing embedded items. Anchor locations can be adjusted by a maximum of 1 1/2" from detailed locations to avoid conflicts, unless noted otherwise.
6. Based on field verified locations of reinforcing steel and embedded items, the Contractor shall create templates for each anchor group. Submit template dimensions for review prior to fabrication of connection plates.
7. Holes for anchors shall be drilled in a continuous operation using the bit type and size recommended by the anchor manufacturer. Holes shall be drilled perpendicular to the concrete surface and shall not be enlarged or redirected at any point along its length. All debris shall be blown out of the holes with compressed air after drilling.
8. All abandoned holes shall be filled with non-shrink grout.
9. Holes in connection plates shall be no more than 1/16" larger than the anchor diameter. If larger holes are required for erection purposes, Contractor shall provide 1/4" x 3" x 3" plate washers sufficiently welded to the connection plate to transfer the specified load.
10. Installation of expansion anchors shall be continuously inspected by the testing agency to ensure that holes are of specified size, and that bolts are properly installed including application of minimum installation torques.

ADHESIVE ANCHORS

1. Adhesive anchors shall only be used where specified on the drawings. The contractor shall obtain approval from the engineer of record prior to using the anchors for missing or misplaced cast-in-place anchors.
2. Unless otherwise noted, size and depth of the adhesive anchors specified in the drawings are based on HAS rods epoxy doweled with HY 200 Max or RE 500 SD, Hilti Fastening Systems.
3. Substitution of expansion anchor products with similar capacities shall be submitted to the engineer of record for approval.
4. Adhesive anchors of the size and embedment shown on the Drawings shall be installed in accordance with the Contract Documents, the manufacturer's recommendations, and the manufacturer's current ICBO report for the anchor. If conflicts exist between these referenced documents, the most stringent requirements shall govern.
5. The Contractor shall locate all existing reinforcing steel and other embedded items contained in the concrete using non-destructive methods and shall position anchor locations to avoid conflicts with existing embedded items. Anchor locations can be adjusted by a maximum of 1 inch from detailed locations to avoid conflicts, unless noted otherwise.
6. Based on field verified locations of reinforcing steel and embedded items, the Contractor shall create templates for each anchor group. Submit template dimensions for review prior to fabrication of connection plates.
7. Holes for anchors shall be drilled in a continuous operation using the bit type and size recommended by the anchor manufacturer. Holes shall be drilled perpendicular to the concrete surface and shall not be enlarged or redirected at any point along its length. All debris shall be blown out of the holes with compressed air after drilling.
8. All abandoned holes shall be filled with non-shrink grout.
9. Holes in connection plates shall be no more than 1/16" larger than the anchor diameter. If larger holes are required for erection purposes, Contractor shall provide 1/4" x 3" x 3" plate washers sufficiently welded to the connection plate to transfer the specified load.
10. Installation of adhesive anchors shall be continuously inspected by the testing agency to ensure that holes are of specified size, and that bolts are properly installed.

SLAB ON GRADE

1. Slab on grade shall be poured in strips not to exceed 30'-0".
2. Provide control joints or construction joints at the centerlines of all columns and at 15 feet on center maximum in both directions. Provide additional joints such that the resulting aspect ratio does not exceed 1:1.5
3. Tooled, sawcut, or preformed joints shall be 1/4 the depth of the slab. Sawcut joints must be made within 12 hours after the slab has been placed.
4. Metal keyway forms or bulkheads shall be removed prior to placement of adjacent pours.
5. Refer to "Building Pad Preparation" section for fill requirements.
6. Erection equipment that imposes any concentrated load in excess of 2,000 lbs acting over a 2'-6"x2'-6" area may not be used on the slab-on-grade. Equipment used that will exceed this loading shall be staged away from the building slab and means for doing so shall be included in base bids.
   A. Concentrated loads in excess of 100 psf shall be no closer than 10'-0'' from the basement walls and 5'-0" from the north grade beam.

CONCRETE REINFORCING

1. Reinforcing steel shall be deformed new billet steel bars in accordance with ASTM A615 Grade 60.
2. Detailing of reinforcing steel shall conform to the American Concrete Institute Detailing Manual.
3. All hooks and bends in reinforcing bars shall conform to ACI detailing standards unless shown otherwise.
4. Provide reinforcing bars in accordance with the bar bending diagram if bar types are specified. In unscheduled beams, slabs, columns and walls detail reinforcing as follows:
   a. Lap top reinforcing bars at mid span.
   b. Lap bottom reinforcing bars at the supports.
   c. Lap vertical bars in columns and walls only at floor lines, unless noted otherwise.
   d. Refer to lap splice schedule for splice length requirement.
   e. Reinforcement labeled as continuous shall be lap spliced 38 bar diameters as a minimum, unless otherwise noted.
   f. Provide standard hooks in top bars at cantilever and discontinuous ends of beams, walls and slabs.
   g. Provide corner bars for all horizontal bars at the inside and outside faces of intersecting beams or walls. Corner bars are not required if top, bottom, or horizontal bars are hooked.
5. Welding of reinforcing steel will not be permitted.
6. Heat shall not be used in the fabrication or installation of reinforcement.
7. Reinforcing steel clear cover shall be as follows:
   a. Grade beams - 1½" top, 3" bottom, 2" side (formed), 3" side (placed against earth)
   b. Walls - 2"
   c. Columns - 1½"
   d. Slabs above grade - 1"
8. Submittal: Submit shop drawings for fabrication, bending, and placement of concrete reinforcement. Comply with ACI 315 "Details and Detailing of Concrete Reinforcement". Do not reproduce the Contract Drawings for use as shop drawings.

CAST IN PLACE CONCRETE

1. Cast in place concrete shall meet the following requirements:

Class	28 Day Strength	Aggregate Type	Size	Slump	Use
A	4,000 psi	NW C33	3/4"	5"-7"	Foundations, slab on grade, slab on metal deck

2. Fly ash shall not be used in architecturally exposed concrete.
3. Provide 5 percent plus or minus 1½ percent of entrained air in concrete permanently exposed to the weather and elsewhere at the contractors option. Do not use entrained air in drilled piers.
4. Horizontal construction joints in concrete pours shall be permitted only where indicated on the drawings. All vertical construction joints shall be made in the center of spans in accordance with the typical details. Contractor shall submit proposed locations for construction joints not shown on drawings for review by the Architect and Structural Engineer. Additional construction joints may require additional reinforcing as specified by the Engineer which shall be provided by the contractor at no additional cost to the owner.
5. Embedded conduits, pipes, and sleeves shall meet the requirements of ACI 318-14, Sections 20.7 and 26.8, including the following:
   a. Conduits and pipes embedded within a slab, wall, or beam (other than those passing through) shall not be larger in outside dimension than 1/3 the overall thickness of the slab, wall or beam in which they are embedded.
   b. Conduits, pipes and sleeves shall not be spaced closer than three diameters or widths on center.
6. Concrete pours shall not exceed 5000 square feet or 100 linear feet on each side without prior approval by the Architect for each pour.
7. Submittal: Submit proposed mix designs in accordance with ACI 301, chapter 3.9. Each proposed mix design shall be accompanied by a record of past performance based on at least 30 consecutive strength tests, or by three laboratory trial mixtures with confirmation tests.

TIMBER FRAMING

1. Unless otherwise noted, all structural framing lumber shall be clearly marked No. 1 Southern Yellow Pine or Douglas Fir-Larch, except that non-loadbearing interior walls may be stud grade Southern Yellow Pine, Douglas Fir-Larch, or Spruce-Pine-Fir.
   a. All exposed wood to be select-structural Douglas Fir.
   b. All exterior wood to be pressure treated.
2. Studs shall be 2x4's at 16" on center, typical, unless noted otherwise.
3. All wood headers, beams, and top plates shall be No. 1 Southern Yellow Pine or Douglas Fir-Larch.
4. All wood stud walls shall be full height without intermediate plate line unless detailed otherwise.
5. All load bearing walls shall have solid 2x blocking at 4'-0" o.c. maximum vertically. End nail with 2-16d nails or side toe nail with 2-16d nails.
6. Provide double studs at all wall corners and on each side of all openings, unless noted or detailed otherwise.
7. Roof sheathing: APA rated sheathing as noted on plan with an exposure 1 rating. Panels shall be continuous over two or more spans with the long dimension oriented perpendicular to the framing members. Nail with 8d common nails at 6" on center at supported edges and 12" on center at intermediate supports. Stagger joints in sheathing.
8. All corners of wall framing shall be braced by a 4'-0" wide x 1/2" panel of APA rated sheathing with an exposure 1 rating extending from the top plate to the sill plate. Where wall is taller than 8'-0", provide multiple panels as required to extend from sill plate to top plate. Provide 2x blocking as required to support all panel edges. Nail with 8d common nails at 6" on center at supported edges and 12" on center at intermediate supports.
9. Solid 2x blocking or bandboard shall be provided at supports and cantilever ends of all wood joists, and between supports in rows not exceeding 8'-0" apart.
10. All framing members framing into the side of a header shall be attached using metal joist hangers of type "LU" as manufactured by the Simpson Company or equal. The hanger shall be sized and installed in accordance with the manufacturers recommendations for the size of joist supported.
11. Place a single plate at the bottom and a double plate at the top of all stud walls. Exterior sill plates shall be bolted to the foundation with 1/2" anchor bolts with a minimum embedment of 8" spaced at 4'-0" on center. Provide a minimum of two bolts per plate segment. Sill plates in contact with concrete or masonry shall be pressure treated with a preservative.
12. As an alternate, plates may be attached to concrete foundation elements with power actuated fasteners. Provide washers at least 0.08 inches thick, and 1.1 inches square or 1.425 inches in diameter at each fastener. Fasteners shall be 3" long and shall have a minimum shank diameter of 0.145 inches. Provide two fasteners located 6 and 10 inches from the end of each sill plate piece, and then at a maximum spacing of 18 inches on center maximum at exterior walls and at interior party walls. At interior non-load bearing partitions, fasteners may be spaced at 36" on center, maximum. Fasteners shall be Hilti X-DNI 72P8S36 pins or equal. Submit manufacturer's information on fastener to be used prior to start of construction.
13. Provide double joists under all interior partition walls oriented parallel to the joists.
14. All bolts and lag screws shall have standard washers. All anchor and expansion bolts used in wood to concrete connections in crawlspace areas shall be hot dip galvanized or stainless steel.
15. Refer to the architectural drawings for additional wood framing members. Provide additional wood framing members shown on the architectural drawings even though they may not be shown on the structural drawings.

COMPOSITE METAL DECK AND CONCRETE SLAB

1. Composite metal deck shall be as shown on plan. Min. Yield strength shall be 50 ksi.
2. Composite metal deck shall be galvanized per ASTM A525, class G60 coating.
3. Deck shall be continuous over 4 or more supports so as not to require any intermediate shoring to support construction loads and wet concrete, unless noted otherwise. Two span deck shall not be used unless approved by EOR. Contractor may provide properly designed heavier gauge deck installed in single span lengths if desired to eliminate shoring requirements.
4. Reinforce the slab over the composite deck with WWM chaired to be located 3/4" below the top of the slab. Provide a 6'-0" wide extra layer of mesh over all interior beams and girders spanning parallel to the deck span.
5. Edge ribs of panel shall be fastened by 5/8" diameter puddle weld or shear stud at each support. Space additional welds at an average of 12".
6. Metal edge forms shall be 14 gauge cold formed steel with 1/2" return lip. Weld edge form to supporting beams at 12" spacing, unless noted otherwise.
7. Slabs over composite deck shall be placed and finished to provide a floor within specified tolerances. Slab thicknesses may vary away from the columns due to deflections of the beams and deck.

ADHESIVE DOWELS

1. Adhesive dowelling system shall be one of the following products: Hilti "HY 200 MAX", Hilti "RE 500 SD". Install dowels in accordance with the manufacturer's instructions.
2. Clean out holes with compressed air after drilling holes.
3. Rebar Size / Hole Diameter / Embedment Depth
   #4 / 5/8" / 4 1/2"
   #5 / 3/4" / 6"
4. Prior to drilling holes for dowels, locate existing reinforcing steel with a Pachometer (R-Meter) or by drilling 1/4" diameter pilot holes. Relocate bolt holes as required to avoid existing reinforcement.
5. Abandoned holes shall be completely filled with adhesive dowelling compound.

TEXAS PARKS & WILDLIFE

FORD POWELL &CARSON Architects & Planners, Inc.
Architecture
Planning
Preservation
Interior Design
1138 East Commerce Street
San Antonio, Texas 78205
210/226-1246
FPC# 92705

STATE OF TEXAS
KARINA TRIBBLE
109642
LICENSED
PROFESSIONAL ENGINEER
7/3/20

aec Architectural Engineers Collaborative
Austin, Tx 78756
Lamar Central
P 512.472.2111
3800 N. Lamar Blvd.
www.aecollab.com
Suite 330
F 1985
FIRM REG #:
17007
AEC JOB#:

TYLER STATE PARK
HEADQUARTERS REPLACEMENT PHASE 1
PROJECT NUMBER: 112741

DATE: 07/03/2020
DESIGNED BY: KT
DRAWN BY: EV
REVIEWED BY: KT

no.	revision	date

SHEET TITLE
GENERAL NOTES

SHEET NUMBER
S101

CONSTRUCTION DOCUMENTS

PREFABRICATED METAL PLATE CONNECTED WOOD TRUSSES

1. Trusses shall be designed by the Contractor in accordance with the Truss Plate Institute "National Design Standard for Metal Plate Connected Wood Truss Construction" (ANSI/TPI 1-02).

2. Truss members shall be clamped in a mechanical or hydraulic jig with sufficient pressure to bring members into reasonable contact at all joints during application of connector plates.

3. Provide adequate erection bracing in accordance with Truss Plate Institute publication HIB-91.

4. Truss Manufacturer shall provide permanent bracing as required by the design of the trusses. Erection bracing may remain in place as permanent bracing where it does not interfere with the architectural finishes.

5. All timber truss members shall be Southern Yellow Pine with a maximum moisture content of 19%. Chord members shall be No. 2 or better and web members shall be No. 3 or better.

6. Connection plates shall be manufactured by a WTCA member plate manufacturer. Plates shall be 20 gauge minimum, ASTM A653 grade 33 steel, with a G60 galvanized coating.

7. Trusses shall be designed in accordance with the following requirements:

   a. Top chords shall be designed to resist the local bending induced by the floor or roof uniform load on the top chord.

   b. Limit live load deflection of trusses to L/360. Total load deflections shall be limited to L/240.

   c. Truss members and connections shall be proportioned with a maximum Load Duration Factor as follows:

Dead Load	0.9
Occupancy Live Load	1.0
Snow Load	1.15
Construction Load	1.25
Wind/Seismic Load	1.6

   d. Trusses shall be designed for the superimposed dead, live, and snow drift loads as noted in the Structural Notes and as indicated on the drawings. Dead loads shall not be less than the following:

      Roof 10 psf

   e. Trusses shall be designed for the superimposed wind loads in accordance with the specified building code and the specified basic wind speed, exposure, and importance factor. Increase member sizes or provide additional bridging as required to resist uplift forces.

8. Connect roof trusses to bearing wall or beam support at each end with a type H3 framing tie as manufactured by the Simpson Company or approved equal, u.o.n.

9. Refer to mechanical drawings for size and location of mechanical openings.

10. Submittal: Provide shop drawings and calculations prepared and signed by a professional engineer licensed in the state of Texas. Submittal package shall include each individual truss design drawing with design loads, the truss placement diagram for the project, the truss member permanent bracing specification. Refer to IBC section 2303.4.1 for additional requirements.

TONGUE AND GROOVE DECKING

1. Tongue and groove decking shall be 3x6 or 4x6 inches nominal solid sawn lumber. Wood shall be No. 2 or better Douglas Fir/Larch. Depth is noted on plan.

2. Pattern shall be standard vee grooved. Finish shall be smooth surface.

3. Lay-up shall be random continuous. The distance between end joints in adjacent rows shall be at least 2'-0". The distance between end joints of decking separated by only one course shall be at least 1'-0". One third of the courses in end spans shall not have end joints.

4. Nailing Schedule:

	Toenailing Along Courses	Face Nailing to Supports
3" Nominal	8d@30"	2-20d
4" Nominal	16d@30"	2-30d

5. Toenailing or "slant" nailing shall be started approximately 12" from the end of each piece. Nails shall be ring shank nails. Pre-drill holes for 30d and larger nails.

GLUED LAMINATED WOOD

1. Glued laminated wood members shall be Southern Pine or Douglas Fir, with grade combinations that furnish a minimum allowable extreme fiber stress in bending of 2,400 pounds per square inch in the tension zone.

2. All members shall be "balanced" and provided with laminations conforming to tension zone requirements in both the top and bottom of the member resulting in a minimum extreme fiber bending stress in bending of 2400 pounds per square inch in both the tension and compression zones.

3. Members shall be furnished with grade combinations that furnish a minimum allowable stress in tension parallel to grain of 1000 pounds per square inch and in compression parallel to grain of 1600 pounds per square inch for four or more laminations.

4. Members shall conform to the latest edition of "Standard Specifications for Structural Glued Laminated Timber of Softwood Species (AITC 117 - MANUFACTURING)," The American Institute of Timber Construction.

5. Members to be covered shall be AITC Industrial Appearance Grade. Exposed members shall be AITC Architectural (or Premium) appearance grade.

6. All holes for bolts or connectors shall be shop drilled using templates. Bolt holes shall be 1/16" larger than bolt diameter.

7. Provide standard camber in all members to compensate for short and long term dead load deflection, unless camber is shown on the drawings

STRUCTURAL ABBREVIATIONS

ADDITIONAL	ADD'L.
ADJACENT	ADJ.
AGGREGATE	AGGR.
ALTERNATE	ALT.
ANCHOR ROD	A.R.
ARCHITECT(URAL)	ARCH('L).
AIR CONDITIONER	A/C
AIR HANDLING UNIT	AHU
APPROXIMATE(LY)	APPROX.
AXIAL LOAD	P
BACK FACE	B.F.
BEAM	BM.
BEARING	BRG.
BETWEEN	BTWN.
BLOCKING	BLKG.
BLOCK-OUT	B.O.
BOTTOM	BOT.
BOTTOM OF	B.O.
BOTTOM OF STEEL	B.O.S.
BRICK LEDGE	BR. L.
BRIDGING	BRDG.
BUILDING	BLDG.
BUILDING LINE	B.L.
CAST-IN-PLACE	C.I.P.
CENTER LINE	C.L. OR ℄
CENTER LINE OF STEEL	C.L.S.
CENTER OF GRAVITY	C.G.
CLEAR(ANCE)	CLR.
COLUMN	COL.
COMPLETE JOINT PENETRATION	C.J.P.
COMPRESSION	C OR COMP.
CONCRETE	CONC.
CONCRETE MASONRY UNIT	CMU
CONNECTIONS	CONX(S).
CONTINUOUS	CONT.
CONTRACTOR	CONTR.
CONTROL JOINT	CTL. J.
CONSTRUCTION	CONST.
CONSTRUCTION JOINT	C.J.
COVER PLATE	COV. PL.
DEFORMED BAR ANCHOR(S)	DBA('S).
DETAIL	DET.
DEAD LOAD	D.L.
DIAGONAL	DIAG.
DIAMETER	DIA.
DIMENSION(S)	DIM(S).
DIRECTION	DIR.
DRAWING(S)	DWG(S).
DOUBLE	DBL.
DOUBLE EXTRA STRONG	XXS
DOWEL(S)	DWL(S).
EACH	EA.
EACH FACE	E.F.
EACH WAY	E.W.
ELECTRICAL	ELEC.
ELEVATION	EL.
ELEVATOR	ELEV.
EMBEDMENT	EMBED.
ENGINEER	ENGR.
EQUAL	EQ.
EQUIPMENT	EQUIP.
EXPANSION	EXP.
EXPANSION JOINT	E.J.
EXISTING	EXIST.
EXTERIOR	EXT.
EXTRA STRONG	XS
FACE TO FACE	F. TO F.
FABRICATE(ION)(OR)	FAB.
FAR SIDE	F.S.
FINISH(ED)	FIN('D).
FINISHED FLOOR	F.F.
FIREPROOF	F.P.
FLANGE	FLG.
FLOOR	FL.
FLOOR DRAIN	F.D.
FOOTING	FTG.
FOUNDATION	FDN.
GALVANIZED	GALV.
GENERAL	GEN.
GLUE LAMINATED TIMBER	GLULAM
GRADE	GR.
GRADE BEAM	GR.BM.
HOT DIP(PED)	H.D.
HEADED STUD(S)	H.S.
HEADER	HDR.
HEIGHT	HT.
HORIZONTAL	HORIZ.
HOOK	HK.
INSIDE DIAMETER	I.D.
INSIDE FACE	I.F.
INTERIOR	INT.
INTERMEDIATE	INTERM.
JOINT	JT.
JOIST(S)	JST(S).
LAMINATED VENEER LUMBER	LVL
LAMINATED STRAND LUMBER	LSL
LIGHTWEIGHT	LWT.
LIVE LOAD	L.L.
LONGITUDINAL	LONG.
LONG LEG HORIZONTAL	LLH
LONG LEG VERTICAL	LLV
LONG SIDE HORIZONTAL	LSH
LONG SIDE VERTICAL	LSV
MANUFACTURE(R)	MFR.
MASONRY	MAS.
MATERIAL	MAT'L.
MECHANICAL	MECH('L).
METAL	MTL.
MEZZANINE	MEZZ.
MIDDLE	MID.
MISCELLANEOUS	MISC.
MOMENT	M.
MOMENT CONNECTION(S)	M.C.
NEAR FACE	N.F.
NOMINAL	NOM.
NON-SHRINK	N.S.
NORMAL WEIGHT	N.W.
NOT IN CONTRACT	N.I.C.
NOT TO SCALE	N.T.S.
ON CENTER	O.C.
OPENING(S)	OPNG(S).
OPPOSITE	OPP.
OPPOSITE HAND	O.H.
ORIENTED STRAND BOARD	OSB
OUTSIDE FACE	O.F.
OUTSIDE DIAMETER	O.D.
PARALLEL	PAR.
PARALLEL STRAND LUMBER	PSL
PARTIAL JOINT PENETRATION	P.J.P.
PENETRATION	PEN.
PERPENDICULAR	PERP.
PIECE	PC.
PLATE	PL. OR ℗
PLYWOOD	PLYWD.
POINT	PT.
POST-TENSION(ED)	P.T.
POUND(S) X1000	KIP(S)
POUNDS PER LINEAR FOOT	PLF
POUNDS PER SQUARE FOOT	PSF
POUNDS PER CUBIC FOOT	PCF
POUNDS PER CUBIC YARD	PCY
PRECAST CONCRETE	P/C
PREFABRICATED	PREFAB.
PRELIMINARY	PRELIM.
PRESSURE	PRESS.
PROJECT(ION)	PROJ.
RADIUS	R
REFER TO / REFERENCE	REF.
REINFORCE(ING)(ED)(MENT)	REINF.
REMAINDER	REM.
REQUIRE	REQ.
REQUIRED	REQ'D
RETURN	RET.
ROOF DRAIN	R.D.
ROUGH OPENING	R.O.
ROUND	RND.
SCHEDULE(D)	SCHED.
SECTION	SECT.
SHEAR FORCE	V
SHEET	SHT.
SIMILAR	SIM.
SPACE(S)(ING)	SPA.
SPECIFICATION(S)	SPEC(S).
SPECIFIED	SPEC'D
SQUARE	SQ.
STAINLESS STEEL	S.S.
STANDARD	STD.
STEEL	STL.
STIFFENER	STIFF
STRAIGHT	STR.
STIRRUPS	STIR.
STRUCTURE OR STRUCTURAL	STRUCT.
SUPPORT(S)	SUPT(S)
TENSION	T
THICK(NESS)	THK.
TONGUE AND GROOVE	T&G
TOP AND BOTTOM	T&B
TOP OF BEAM	T.O. BM.
TOP OF FOOTING	T.O. FTG.
TOP OF PIER	T.O. PIER
TOP OF PIER CAP	T.O. P.C.
TOP OF STEEL	T.O.S.
TOP OF STRUCTURAL CONCRETE	T.O.S.C.
TOP OF WALL	T.O.W.
TREATED	TRTD.
TYPICAL	TYP.
UNLESS OTHERWISE NOTED	U.O.N.
VERTICAL	VERT.
VOLUME	VOL.
WATER STOP	W.S.
WELDED WIRE MESH	W.W.M.
WIND BRACE	WB
WIND LOAD	W.L.
WITH	W/
WITHOUT	W/O
WATER PROOFING	W.P.
WORK POINT	W.P.
WOOD	WD.

MATERIALS LEGEND

- EXISTING CONSTRUCTION
- CONCRETE
- STEEL IN SECTION
- PLYWOOD IN SECTION
- CMU
- BRICK OR STONE IN SECTION
- GROUT/SAND
- EARTH (UNDISTURBED)
- EARTH/FILL (COMPACTED)
- ROCK
- MECH. UNIT OR ZONE

DRAFTING SYMBOLS

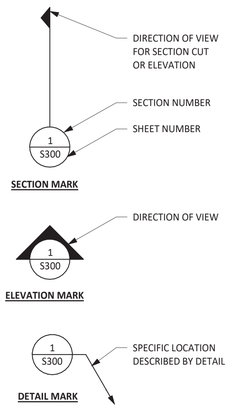

PLAN/DETAIL DESIGNATION

(#) PLAN NAME/DETAIL TITLE

SCALE:

STRUCTURAL DRAWING TYPES

S1 . . . . GENERAL NOTES
S2 . . . . PLANS/FOUNDATION CONSTRUCTION
S3 . . . . CONCRETE CONSTRUCTION
S4 . . . . MASONRY CONSTRUCTION
S5 . . . . STEEL CONSTRUCTION
S6 . . . . WOOD CONSTRUCTION

TEXAS PARKS & WILDLIFE

FORD POWELL &CARSON
Architects & Planners, Inc.
Architecture
Planning
Preservation
Interior Design
1138 East Commerce Street
San Antonio, Texas 78205
210/226-1246
FPC# 92705

STATE OF TEXAS
KARINA TRIBBLE
109642
LICENSED PROFESSIONAL ENGINEER
7/3/20

aec Architectural Engineers Collaborative
Lamar Central
3800 N. Lamar Blvd.
Suite 330
Austin, Tx 78756
P 512.472.2111
www.aecollab.com
FIRM REG.#: F-1985
AEC JOB#: 17007

TYLER STATE PARK
HEADQUARTERS REPLACEMENT PHASE 1
PROJECT NUMBER: 112741

DATE: 07/03/2020
DESIGNED BY: KT
DRAWN BY: EV
REVIEWED BY: KT

no.	revision	date

SHEET TITLE
GENERAL NOTES

SHEET NUMBER
S102

CONSTRUCTION DOCUMENTS

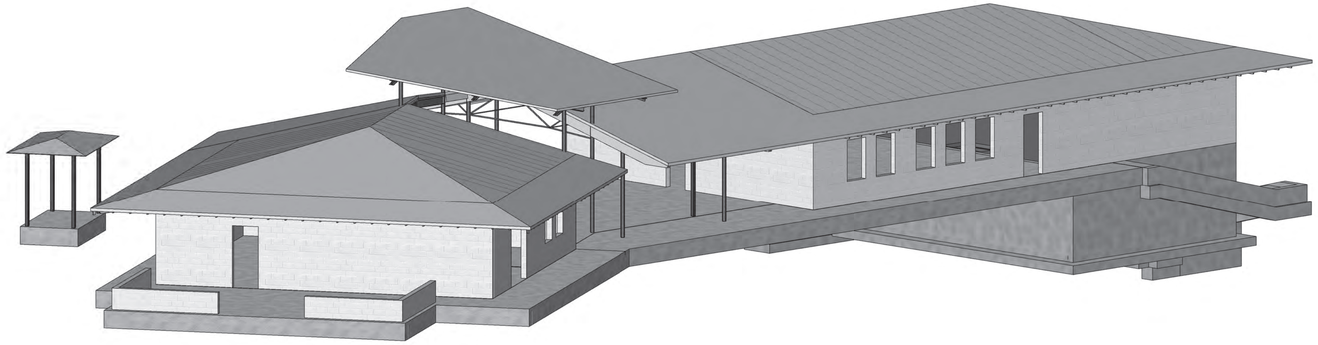

1 STRUCTURAL ISOMETRIC - VIEW FROM SOUTH
SCALE:

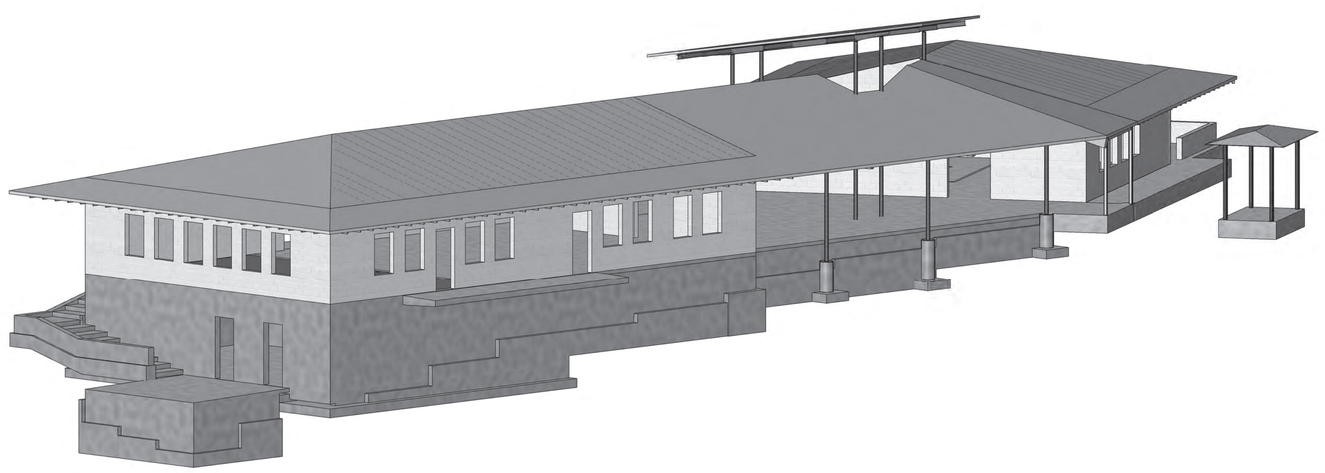

2 STRUCTURAL ISOMETRIC - VIEW FROM NORTH
SCALE:

TEXAS PARKS & WILDLIFE

FORD POWELL &CARSON
Architects & Planners, Inc.
Architecture
Planning
Preservation
Interior Design
1138 East Commerce Street
San Antonio, Texas 78205
210/226-1246
FPC# 92705

STATE OF TEXAS
KARINA TRIBBLE
109642
LICENSED PROFESSIONAL ENGINEER
11/3/20

aec Architectural Engineers Architecture
Lamar Central
3800 N. Lamar Blvd.
Suite 330
Austin, Tx 78756
P 512.472.2111
www.aecollab.com
FIRM REG #: F-13965
AEC JOB#: 17007

TYLER STATE PARK

HEADQUARTERS REPLACEMENT PHASE 1

PROJECT NUMBER: 112741

DATE: 07/03/2020
DESIGNED BY: Designer
DRAWN BY: EV
REVIEWED BY: KT

no.	revision	date

SHEET TITLE

STRUCTURAL ISOMETRIC

SHEET NUMBER

S200

CONSTRUCTION DOCUMENTS

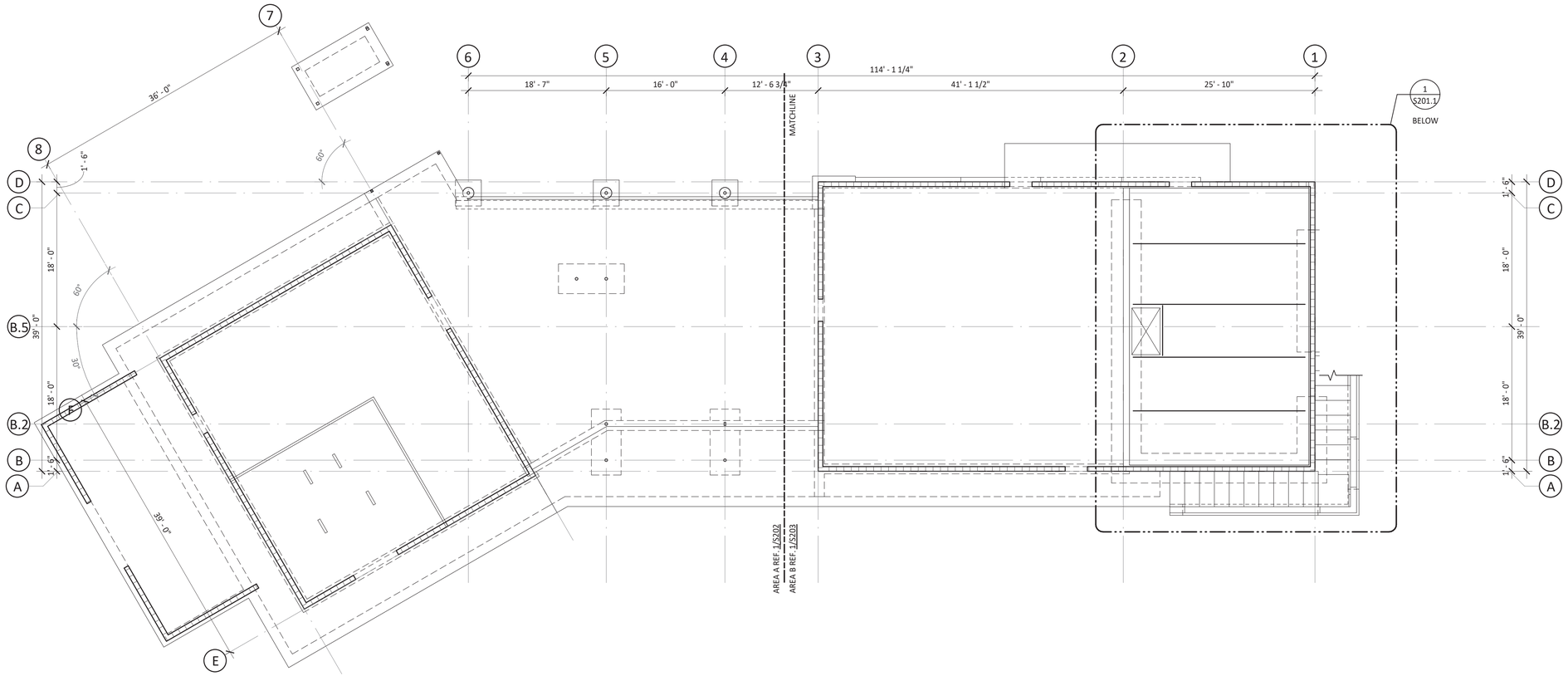

1 FIRST FLOOR FRAMING PLAN
SCALE: 1/8" = 1'-0"

TEXAS PARKS & WILDLIFE

FORD POWELL &CARSON
Architects & Planners, Inc.
Architecture
Planning
Preservation
Interior Design
1138 East Commerce Street
San Antonio, Texas 78205
210/226-1246
FPC# 92705

STATE OF TEXAS
KARINA TRIBBLE
109642
LICENSED
PROFESSIONAL ENGINEER
7/3/20

aec Architectural Engineers Collaborative
Lamar Central
3800 N. Lamar Blvd.
Suite 330
Austin, Tx 78756
P 512.472.2111
www.aecollab.com
FIRM REG.#: F-1985
AEC JOB#: 17007

TYLER STATE PARK
HEADQUARTERS REPLACEMENT PHASE 1
PROJECT NUMBER: 112741

DATE: 07/03/2020
DESIGNED BY: KT
DRAWN BY: EV
REVIEWED BY: KT

no.	revision	date

SHEET TITLE
FIRST FLOOR FRAMING PLAN - OVERALL

SHEET NUMBER
S201

CONSTRUCTION DOCUMENTS

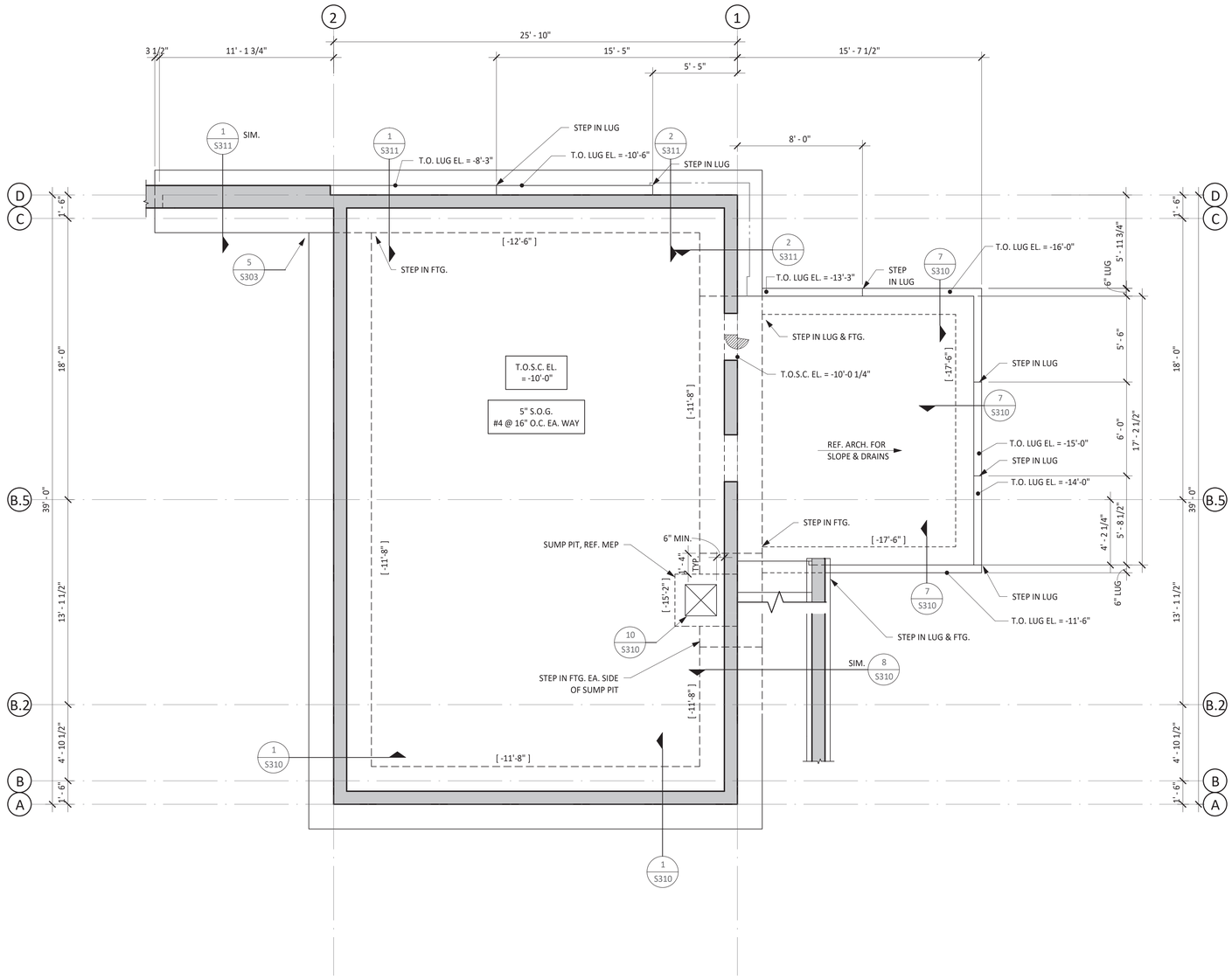

1 BASEMENT FOUNDATION PLAN

SCALE: 1/4" = 1'-0"

PLAN LEGEND:

- INDICATES CONCRETE WALL
- INDICATES LOAD BEARING CMU WALL, REF. 3/S401
- INDICATES WOOD STUD WALL, 2X4 @ 16'' O.C.
- INDICATES STRUCTURAL CONCRETE SLAB STEP
- [X' - XX''] INDICATES BOTTOM OF FOOTING OR GRADE BEAM

FOUNDATION PLAN NOTES:

1. TOP OF STRUCTURAL CONCRETE ELEVATION IS DENOTED AS FOLLOWS UNLESS OTHERWISE NOTED:

   T.O.S.C. EL.=XXX'-XX" (AREA ELEVATION) — T.O.S.C. EL.=XXX'-XX" (SPOT ELEVATION)

2. FOR FINISH FLOOR ELEVATIONS (F.F. EL.), REFER TO ARCHITECTURAL DRAWINGS. ELEVATIONS NOTED ON PLAN ARE FOR REFERENCE ONLY. REFER TO AND VERIFY ALL DIMENSIONS AND ELEVATIONS w/ ARCHITECTURAL DRAWINGS.
3. REFER TO THE ARCHITECTURAL DRAWINGS FOR EXACT LOCATIONS OF FLOOR RECESSES, DROPS AND SLOPES NOT DIMENSIONED ON PLAN.
4. REFER TO ARCHITECTURAL DRAWINGS FOR CONTROL JOINT LOCATIONS.
5. REFER TO MECHANICAL, ELECTRICAL, AND PLUMBING DRAWINGS FOR LOCATIONS AND DIMENSIONS OF PENETRATIONS NOT SHOWN OR DIMENSIONED ON PLAN.
6. REFER TO 4/S501 FOR BASEPLATE SCHEDULE AND DETAILS.
7. COLUMNS ARE NOTED ON PLAN AS FOLLOWS:

   COLUMN MARK, BASEPLATE MARK
   FOOTING MARK, B.O. FTG. EL.

TEXAS PARKS & WILDLIFE

FORD POWELL &CARSON
Architects & Planners, Inc.
Architecture
Planning
Preservation
Interior Design
1138 East Commerce Street
San Antonio, Texas 78205
210/226-1246
FPC# 92705

STATE OF TEXAS
KARINA TRIBBLE
109642
LICENSED PROFESSIONAL ENGINEER
7/3/20

Architectural Engineers Collaborative
Lamar Central
3800 N. Lamar Blvd.
Suite 320
Austin, Tx 78756
P 512.472.2111
www.aecollab.com
FIRM REG #: F-1985
AEC JOB#: 17007

TYLER STATE PARK
HEADQUARTERS REPLACEMENT PHASE 1
PROJECT NUMBER: 112741

DATE: 07/03/2020
DESIGNED BY: KT
DRAWN BY: EV
REVIEWED BY: KT

no.	revision	date

SHEET TITLE
BASEMENT PLAN

SHEET NUMBER
S201.1

CONSTRUCTION DOCUMENTS

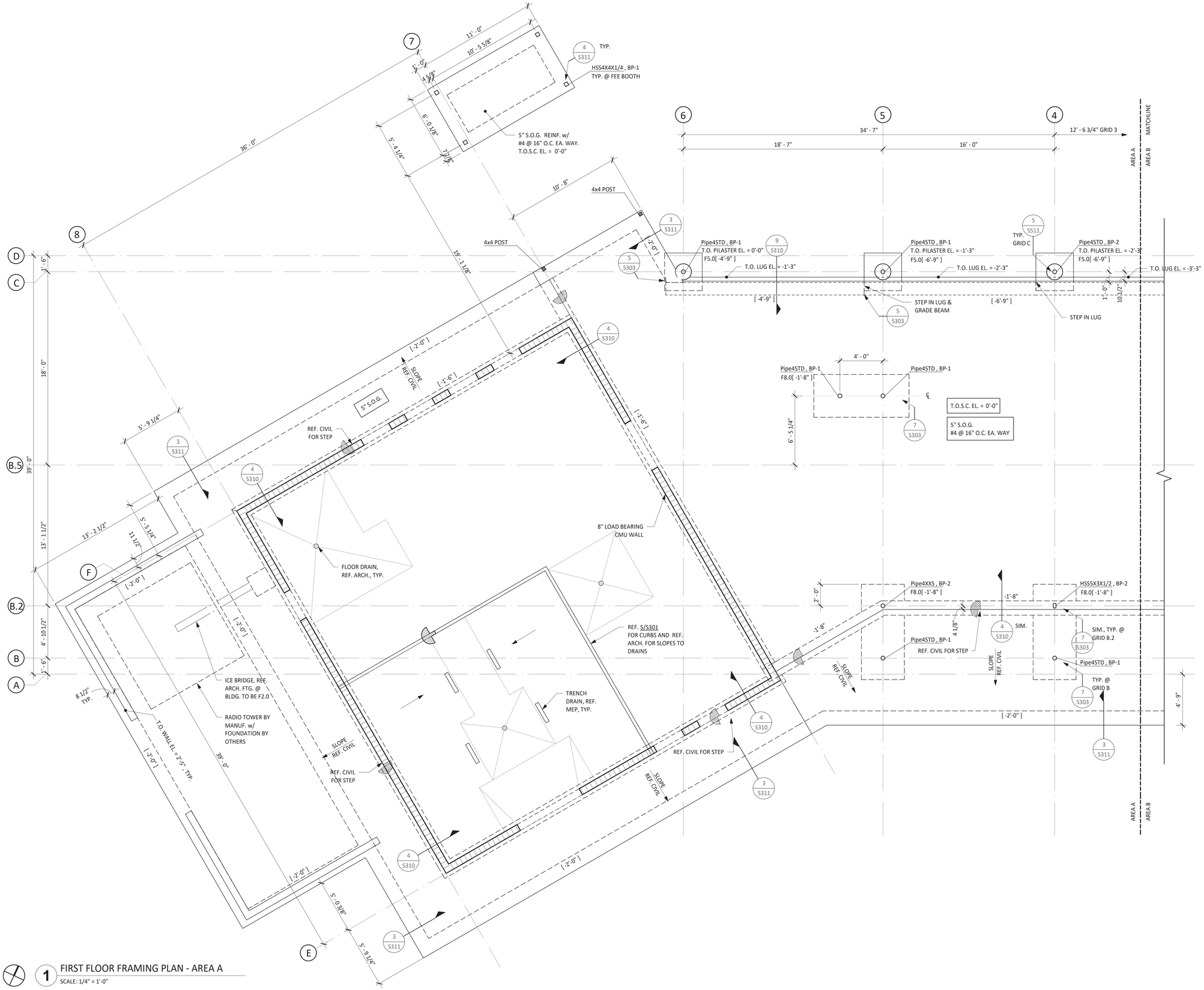

1 FIRST FLOOR FRAMING PLAN - AREA A

SCALE: 1/4" = 1'-0"

PLAN LEGEND:

- INDICATES CONCRETE WALL
- INDICATES LOAD BEARING CMU WALL, REF. 3/S401
- INDICATES WOOD STUD WALL, 2X4 @ 16'' O.C.
- INDICATES STRUCTURAL CONCRETE SLAB STEP
- [X' - XX"] INDICATES BOTTOM OF FOOTING OR GRADE BEAM

FOUNDATION PLAN NOTES:

1. TOP OF STRUCTURAL CONCRETE ELEVATION IS DENOTED AS FOLLOWS UNLESS OTHERWISE NOTED:
   - T.O.S.C. EL.=XXX'-XX" (AREA ELEVATION)
   - T.O.S.C. EL.=XXX'-XX" (SPOT ELEVATION)
2. FOR FINISH FLOOR ELEVATIONS (F.F. EL.), REFER TO ARCHITECTURAL DRAWINGS. ELEVATIONS NOTED ON PLAN ARE FOR REFERENCE ONLY. REFER TO AND VERIFY ALL DIMENSIONS AND ELEVATIONS w/ ARCHITECTURAL DRAWINGS.
3. REFER TO THE ARCHITECTURAL DRAWINGS FOR EXACT LOCATIONS OF FLOOR RECESSES, DROPS AND SLOPES NOT DIMENSIONED ON PLAN.
4. REFER TO ARCHITECTURAL DRAWINGS FOR CONTROL JOINT LOCATIONS.
5. REFER TO MECHANICAL, ELECTRICAL, AND PLUMBING DRAWINGS FOR LOCATIONS AND DIMENSIONS OF PENETRATIONS NOT SHOWN OR DIMENSIONED ON PLAN.
6. REFER TO 4/SS01 FOR BASEPLATE SCHEDULE AND DETAILS.
7. COLUMNS ARE NOTED ON PLAN AS FOLLOWS:

   COLUMN MARK, BASEPLATE MARK
   FOOTING MARK, B.O. FTG. EL.

TEXAS PARKS & WILDLIFE

FORD POWELL &CARSON
Architects & Planners, Inc.
Architecture
Planning
Preservation
Interior Design
1138 East Commerce Street
San Antonio, Texas 78205
210/226-1246
FPC# 92705

STATE OF TEXAS
KARINA TRIBBLE
109642
LICENSED PROFESSIONAL ENGINEER
7/3/20

aec Architectural Engineers Collaborative
Lamar Central
3800 N. Lamar Blvd.
Suite 330
Austin, Tx 78756
P 512.472.2111
www.aecollab.com
FIRM REG.#: F-1985
AEC JOB#: 17007

TYLER STATE PARK

HEADQUARTERS REPLACEMENT PHASE 1

PROJECT NUMBER: 112741

DATE: 07/03/2020
DESIGNED BY: KT
DRAWN BY: EV
REVIEWED BY: KT

no.	revision	date

SHEET TITLE

FIRST FLOOR FRAMING PLAN - AREA A

SHEET NUMBER

S202

CONSTRUCTION DOCUMENTS

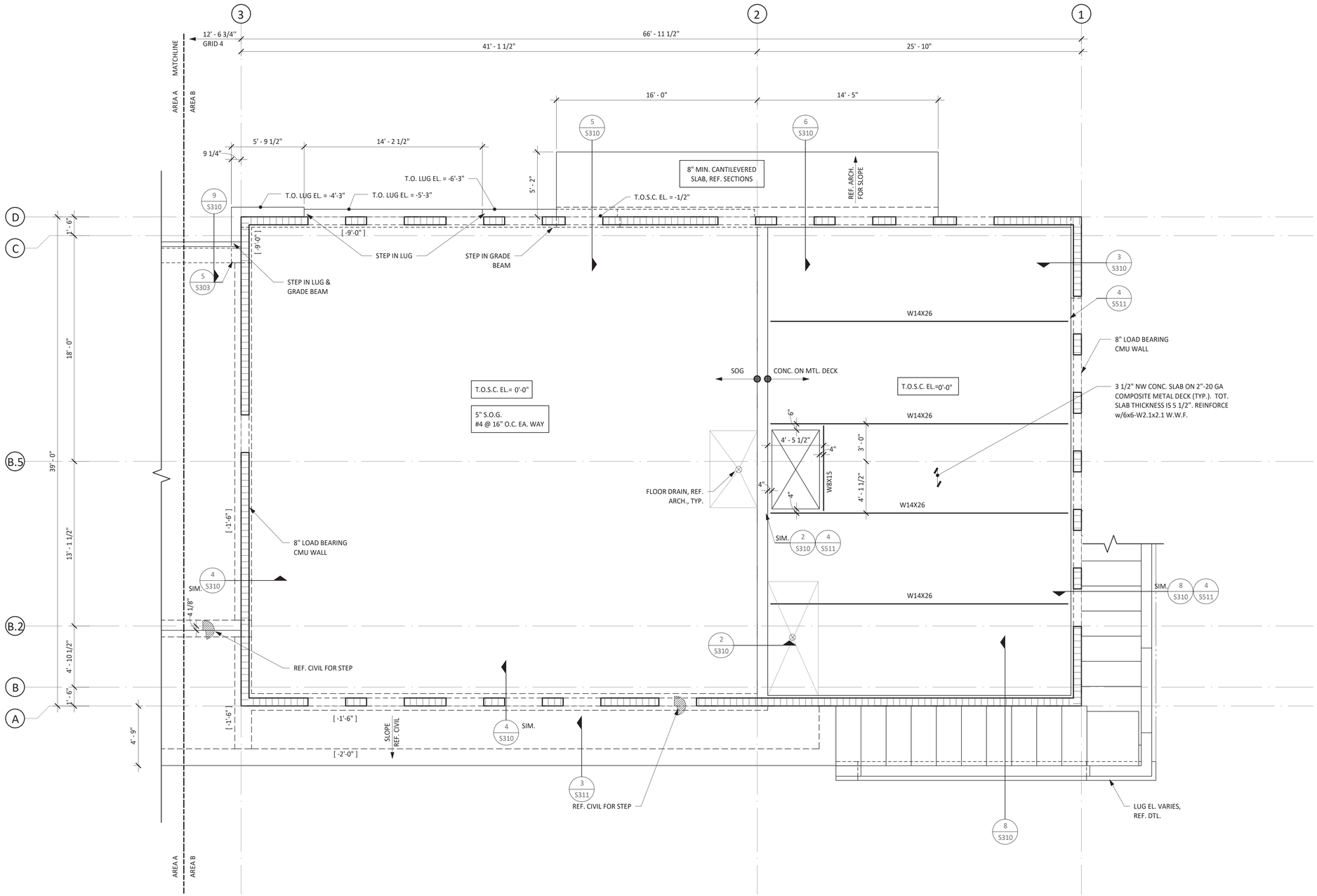

1 FIRST FLOOR FRAMING PLAN - AREA B

SCALE: 1/4" = 1'-0"

PLAN LEGEND:

- INDICATES CONCRETE WALL
- INDICATES LOAD BEARING CMU WALL, REF. 3/S401
- INDICATES WOOD STUD WALL, 2X4 @ 16" O.C.
- INDICATES STRUCTURAL CONCRETE SLAB STEP
- [X' - XX"] INDICATES BOTTOM OF FOOTING OR GRADE BEAM

FOUNDATION PLAN NOTES:

1. TOP OF STRUCTURAL CONCRETE ELEVATION IS DENOTED AS FOLLOWS UNLESS OTHERWISE NOTED:
   - T.O.S.C. EL.=XXX'-XX" (AREA ELEVATION)
   - T.O.S.C. EL.=XXX'-XX" (SPOT ELEVATION)
2. FOR FINISH FLOOR ELEVATIONS (F.F. EL.), REFER TO ARCHITECTURAL DRAWINGS. ELEVATIONS NOTED ON PLAN ARE FOR REFERENCE ONLY. REFER TO AND VERIFY ALL DIMENSIONS AND ELEVATIONS w/ ARCHITECTURAL DRAWINGS.
3. REFER TO THE ARCHITECTURAL DRAWINGS FOR EXACT LOCATIONS OF FLOOR RECESSES, DROPS AND SLOPES NOT DIMENSIONED ON PLAN.
4. REFER TO ARCHITECTURAL DRAWINGS FOR CONTROL JOINT LOCATIONS.
5. REFER TO MECHANICAL, ELECTRICAL, AND PLUMBING DRAWINGS FOR LOCATIONS AND DIMENSIONS OF PENETRATIONS NOT SHOWN OR DIMENSIONED ON PLAN.
6. REFER TO 4/S501 FOR BASEPLATE SCHEDULE AND DETAILS.
7. COLUMNS ARE NOTED ON PLAN AS FOLLOWS:
   - COLUMN MARK, BASEPLATE MARK
   - FOOTING MARK, B.O. FTG. EL.

TEXAS PARKS & WILDLIFE

FORD POWELL &CARSON Architects & Planners, Inc.
Architecture
Planning
Preservation
Interior Design
1138 East Commerce Street
San Antonio, Texas 78205
210/226-1246
FPC# 92705

STATE OF TEXAS
KARINA TRIBBLE
109642
LICENSED PROFESSIONAL ENGINEER
7/3/20

aec Architectural Engineers Collaborative
Lamar Central
3800 N. Lamar Blvd. Suite 330
Austin, Tx 78756
P 512.472.2111
www.aecollab.com
FIRM REG #: F-1985
AEC JOB#: 17007

TYLER STATE PARK
HEADQUARTERS REPLACEMENT PHASE 1
PROJECT NUMBER: 112741

DATE: 07/03/2020
DESIGNED BY: KT
DRAWN BY: EV
REVIEWED BY: KT

no.	revision	date

SHEET TITLE
FIRST FLOOR FRAMING PLAN - AREA B

SHEET NUMBER
S203

CONSTRUCTION DOCUMENTS

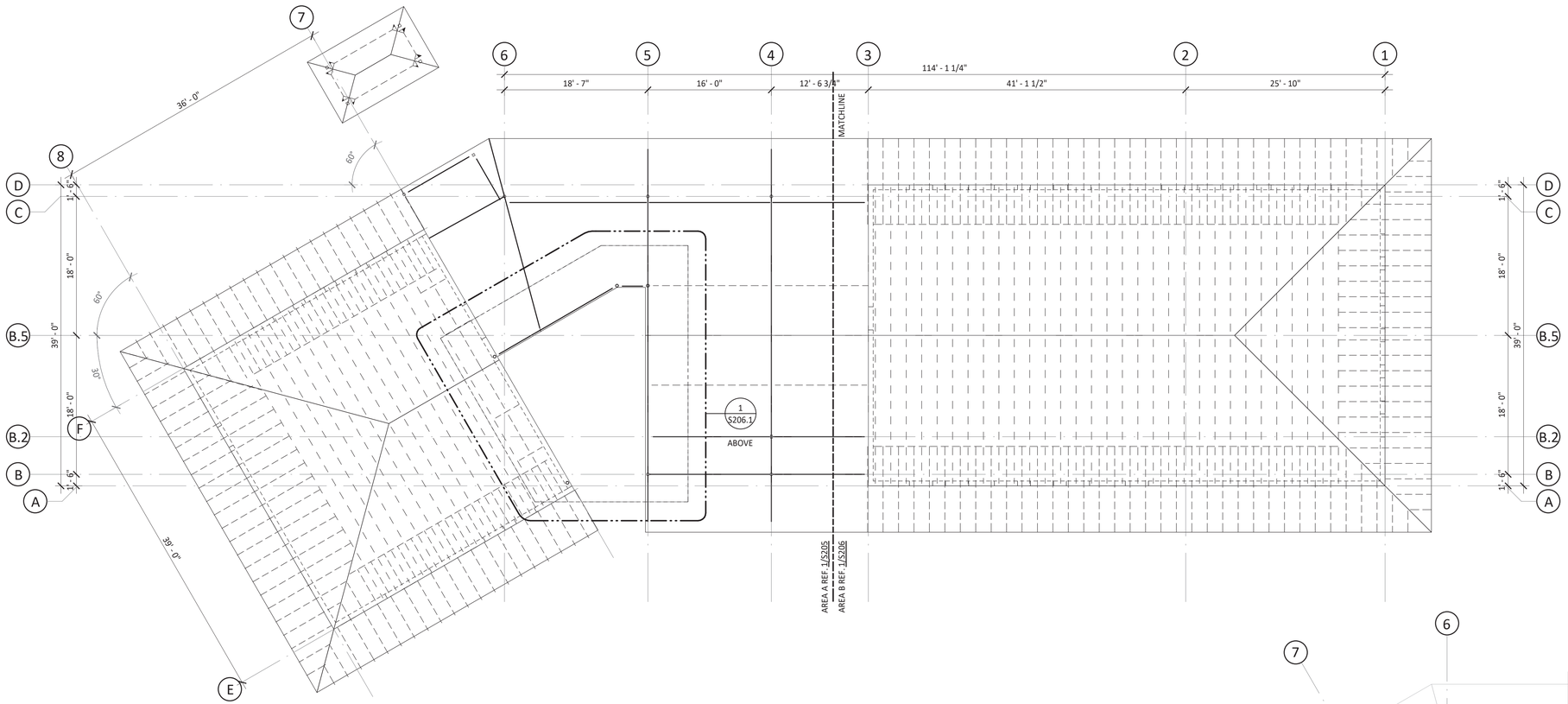

1 LOW ROOF FRAMING PLAN

SCALE: 1/8" = 1'-0"

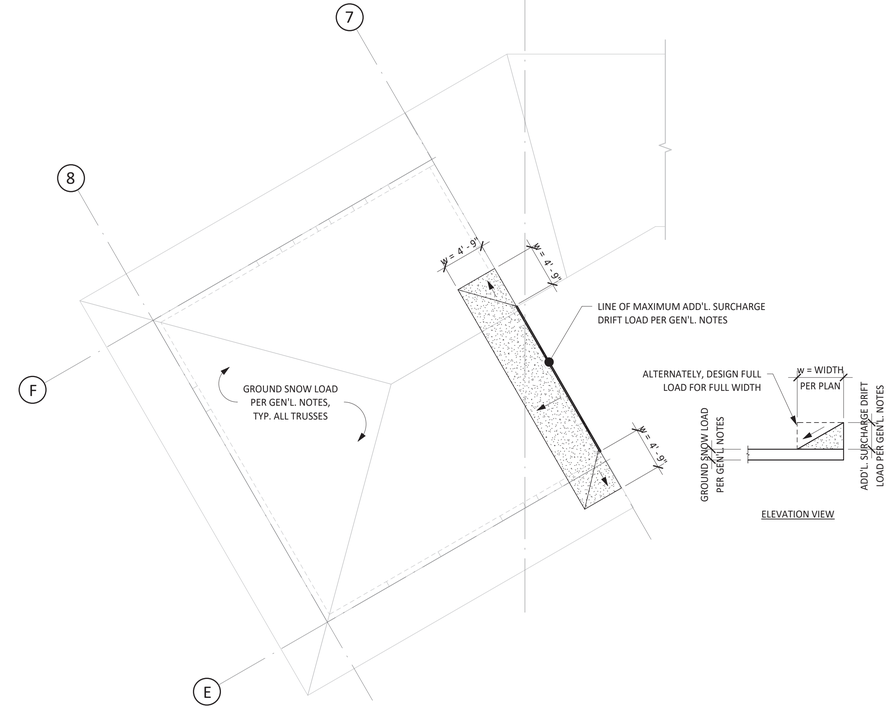

2 PARTIAL PLAN - SNOW DRIFT LOADING PLAN

SCALE: 1/8" = 1'-0"

TEXAS PARKS & WILDLIFE

FORD POWELL &CARSON
Architects & Planners, Inc.
Architecture
Planning
Preservation
Interior Design
1138 East Commerce Street
San Antonio, Texas 78205
210/226-1246
FPC# 92705

STATE OF TEXAS
KARINA TRIBBLE
109642
LICENSED PROFESSIONAL ENGINEER
7/3/20

Architectural Engineers Collaborative
Lamar Central
3800 N. Lamar Blvd. Suite 330
Austin, Tx 78756
P 512.472.2111
www.aecollab.com
FIRM REG #: F-1985
AEC JOB#: 17007

TYLER STATE PARK

HEADQUARTERS REPLACEMENT PHASE 1

PROJECT NUMBER: 112741

DATE: 07/03/2020
DESIGNED BY: KT
DRAWN BY: EV
REVIEWED BY: KT

no.	revision	date

SHEET TITLE

ROOF FRAMING PLAN - OVERALL

SHEET NUMBER

S204

CONSTRUCTION DOCUMENTS

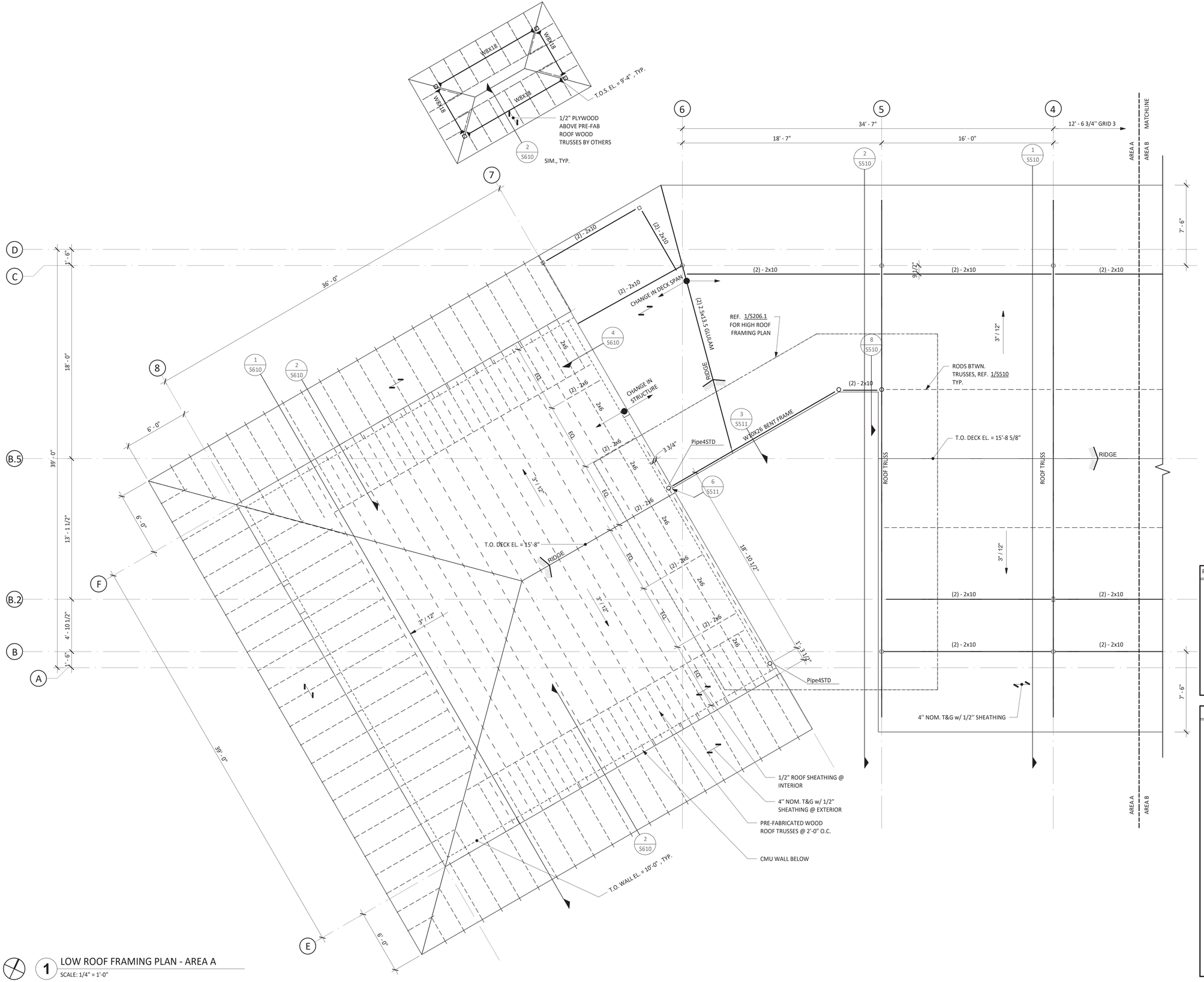

1 LOW ROOF FRAMING PLAN - AREA A

SCALE: 1/4" = 1'-0"

PLAN LEGEND:

- INDICATES CONCRETE WALL
- INDICATES LOAD BEARING CMU WALL, REF. 3/S401
- INDICATES WOOD STUD WALL, 2X4 @ 16" O.C.
- INDICATES STRUCTURAL CONCRETE SLAB STEP
- [X' - XX"] INDICATES BOTTOM OF FOOTING OR GRADE BEAM

ROOF PLAN NOTES:

1. TOP OF STRUCTURAL STEEL ELEVATION (BOTTOM OF DECK) IS DENOTED AS FOLLOWS UNLESS OTHERWISE NOTED:
   - T.O.S. EL.=XXX'-XX" (AREA ELEVATION)
   - T.O.S. EL.=XXX'-XX" (SPOT ELEVATION)
2. FOR FINISH FLOOR ELEVATIONS (F.F. EL.), REFER TO ARCHITECTURAL DRAWINGS. ELEVATIONS NOTED ON PLAN ARE FOR REFERENCE ONLY. REFER TO AND VERIFY ALL DIMENSIONS AND ELEVATIONS w/ ARCHITECTURAL DRAWINGS.
3. REFER TO THE ARCHITECTURAL DRAWINGS FOR EXACT LOCATIONS OF ROOF SLOPES NOT DIMENSIONED ON PLAN.
4. REFER TO MECHANICAL, ELECTRICAL, AND PLUMBING DRAWINGS FOR LOCATIONS AND DIMENSIONS OF ROOF PENETRATIONS NOT SHOWN OR DIMENSIONED ON PLAN.
5. STEEL BEAMS ARE NOTED ON PLAN AS FOLLOWS:

BEAM MARK
CAMBER
W14x22, c=1"

TEXAS PARKS & WILDLIFE

FORD POWELL &CARSON
Architects & Planners, Inc.
Architecture
Planning
Preservation
Interior Design
1138 East Commerce Street
San Antonio, Texas 78205
210/226-1246
FPC# 92705

STATE OF TEXAS
KARINA TRIBBLE
109642
LICENSED ARCHITECT
7/3/20

Architectural Engineers Collaborative
Lamar Central
3800 N. Lamar Blvd.
Suite 330
Austin, Tx 78756
P 512.472.2111
www.aecollab.com
FIRM REG.#: F-1985
AEC JOB#: 17007

TYLER STATE PARK

HEADQUARTERS REPLACEMENT PHASE 1

PROJECT NUMBER: 112741

DATE: 07/03/2020
DESIGNED BY: KT
DRAWN BY: EV
REVIEWED BY: KT

no.	revision	date

SHEET TITLE

ROOF FRAMING PLAN - AREA A

SHEET NUMBER

S205

CONSTRUCTION DOCUMENTS

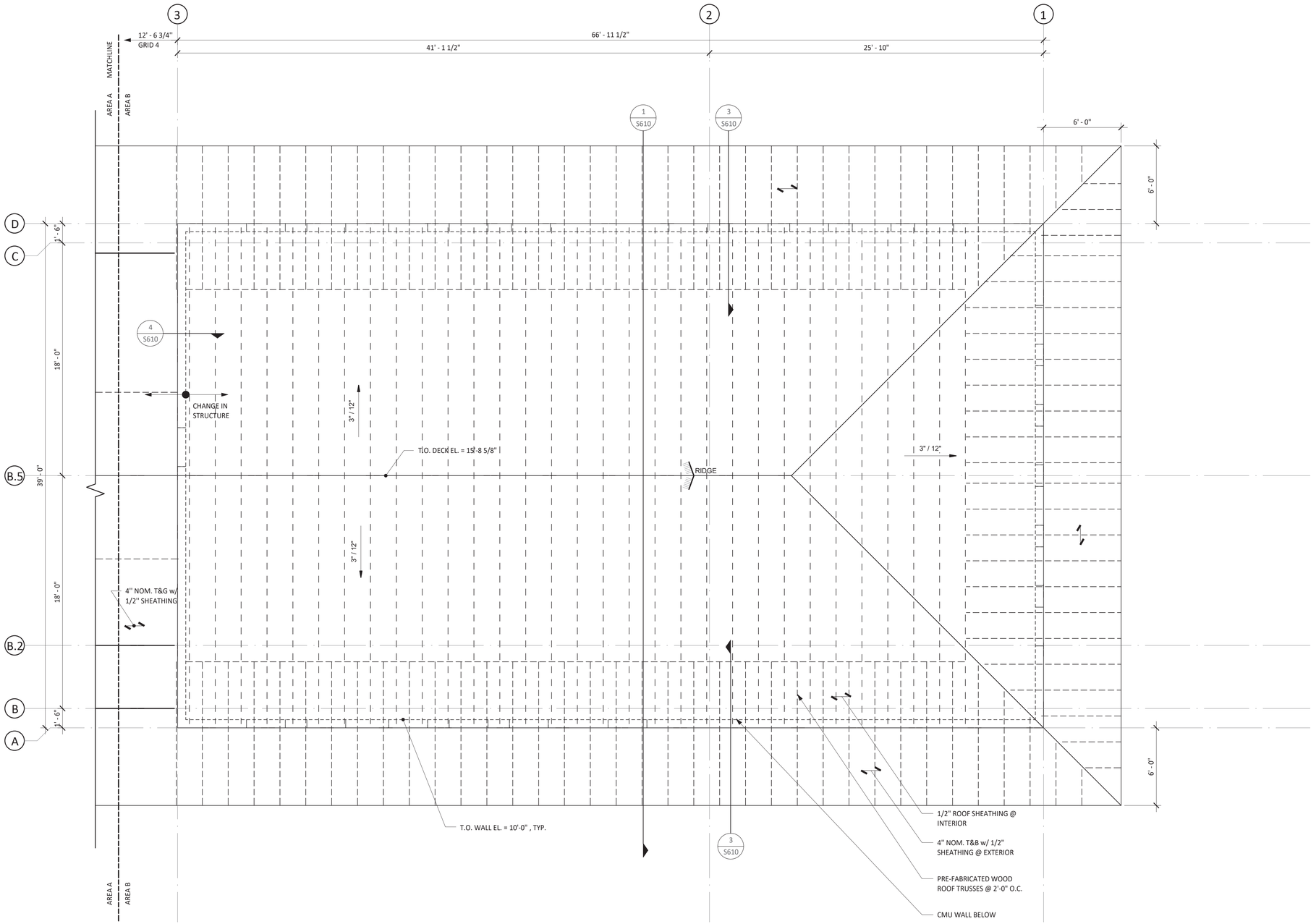

1 LOW ROOF FRAMING PLAN - AREA B

SCALE: 1/4" = 1'-0"

PLAN LEGEND:

- INDICATES CONCRETE WALL
- INDICATES LOAD BEARING CMU WALL, REF. 3/S401
- INDICATES WOOD STUD WALL, 2X4 @ 16" O.C.
- INDICATES STRUCTURAL CONCRETE SLAB STEP
- [X' - XX"] INDICATES BOTTOM OF FOOTING OR GRADE BEAM

FRAMING PLAN NOTES:

1. TOP OF STRUCTURAL CONCRETE ELEVATION IS DENOTED AS FOLLOWS UNLESS OTHERWISE NOTED:
   T.O.S.C. EL.=XXX'-XX" (AREA ELEVATION); T.O.S.C. EL.=XXX'-XX" (SPOT ELEVATION)
2. FOR FINISH FLOOR ELEVATIONS (F.F. EL.), REFER TO ARCHITECTURAL DRAWINGS. ELEVATIONS NOTED ON PLAN ARE FOR REFERENCE ONLY. REFER TO AND VERIFY ALL DIMENSIONS AND ELEVATIONS w/ ARCHITECTURAL DRAWINGS.
3. REFER TO THE ARCHITECTURAL DRAWINGS FOR EXACT LOCATIONS OF FLOOR RECESSES, DROPS AND SLOPES NOT DIMENSIONED ON PLAN.
4. REFER TO MECHANICAL, ELECTRICAL, AND PLUMBING DRAWINGS FOR LOCATIONS AND DIMENSIONS OF PENETRATIONS NOT SHOWN OR DIMENSIONED ON PLAN.
5. COMPOSITE STEEL BEAMS ARE NOTED ON PLAN AS FOLLOWS:

   5K W14x22, (20) c=1" 5K
   - BEAM MARK
   - BEAM END REACTION (SERVICE OR FACTORED)
   - CAMBER AT MID . LENGTH
   - NUMBER OF HEADED STUDS

TEXAS PARKS & WILDLIFE

FORD POWELL &CARSON
Architects & Planners, Inc.
Architecture
Planning
Preservation
Interior Design
1138 East Commerce Street
San Antonio, Texas 78205
210/226-1246
FPC# 92705

STATE OF TEXAS
KARINA TRIBBLE
109642
LICENSED PROFESSIONAL ENGINEER
7/3/20

aec Architectural Engineers Collaborative
Lamar Central
3800 N. Lamar Blvd.
Suite 330
Austin, Tx 78756
P 512.472.2111
www.aecollab.com
FIRM REG #: F-1985
AEC JOB#: 17007

TYLER STATE PARK

HEADQUARTERS REPLACEMENT PHASE 1

PROJECT NUMBER: 112741

DATE: 07/03/2020
DESIGNED BY: KT
DRAWN BY: EV
REVIEWED BY: KT

no.	revision	date

SHEET TITLE

ROOF FRAMING PLAN - AREA B

SHEET NUMBER

S206

CONSTRUCTION DOCUMENTS

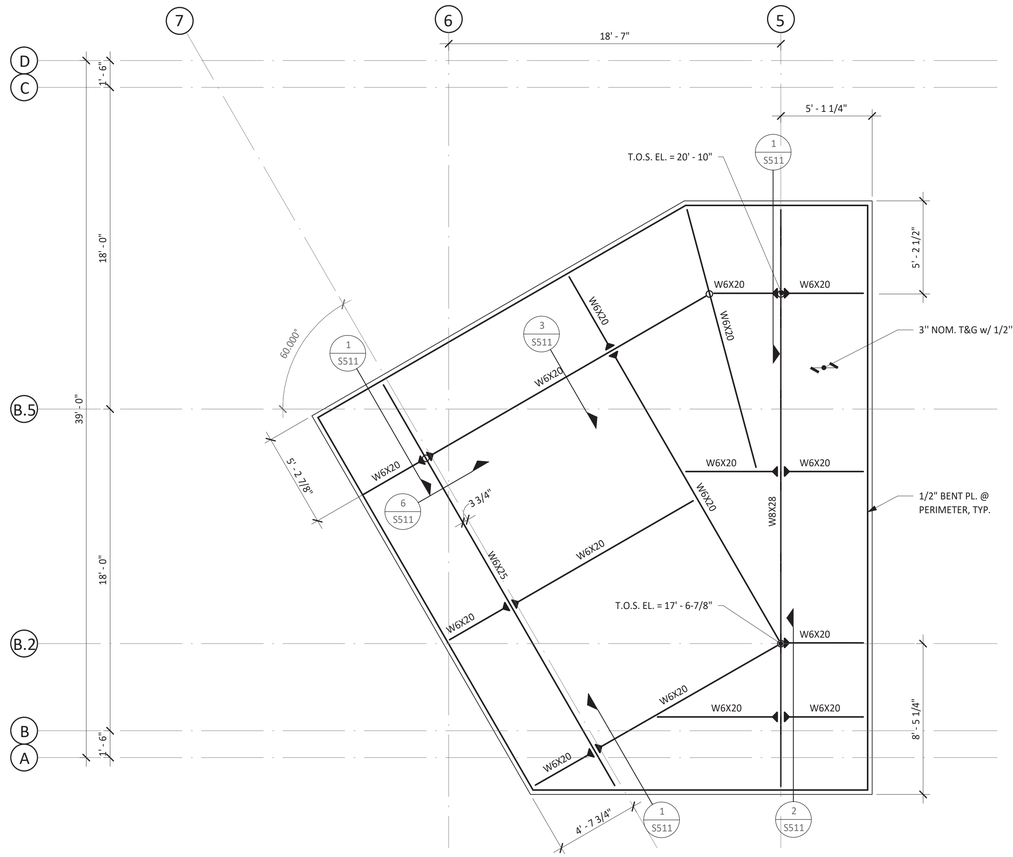

MATCHLINE

AREA A

AREA B

1 HIGH ROOF FRAMING PLAN

SCALE: 1/4" = 1'-0"

PLAN LEGEND:

- INDICATES CONCRETE WALL
- INDICATES LOAD BEARING CMU WALL, REF. 3/S401
- INDICATES WOOD STUD WALL, 2X4 @ 16" O.C.
- INDICATES STRUCTURAL CONCRETE SLAB STEP
- [X' - XX"] INDICATES BOTTOM OF FOOTING OR GRADE BEAM

ROOF PLAN NOTES:

1. TOP OF STRUCTURAL STEEL ELEVATION (BOTTOM OF DECK) IS DENOTED AS FOLLOWS UNLESS OTHERWISE NOTED:
   T.O.S. EL.=XXX'-XX" (AREA ELEVATION); T.O.S. EL.=XXX'-XX" (SPOT ELEVATION)
2. FOR FINISH FLOOR ELEVATIONS (F.F. EL.), REFER TO ARCHITECTURAL DRAWINGS. ELEVATIONS NOTED ON PLAN ARE FOR REFERENCE ONLY. REFER TO AND VERIFY ALL DIMENSIONS AND ELEVATIONS w/ ARCHITECTURAL DRAWINGS.
3. REFER TO THE ARCHITECTURAL DRAWINGS FOR EXACT LOCATIONS OF ROOF SLOPES NOT DIMENSIONED ON PLAN.
4. REFER TO MECHANICAL, ELECTRICAL, AND PLUMBING DRAWINGS FOR LOCATIONS AND DIMENSIONS OF ROOF PENETRATIONS NOT SHOWN OR DIMENSIONED ON PLAN.
5. STEEL BEAMS ARE NOTED ON PLAN AS FOLLOWS:
   W14x22, c=1" (BEAM MARK, CAMBER)

TEXAS PARKS & WILDLIFE

FORD POWELL &CARSON
Architects & Planners, Inc.
Architecture
Planning
Preservation
Interior Design
1138 East Commerce Street
San Antonio, Texas 78205
210/226-1246
FPC# 92705

STATE OF TEXAS
KARINA TRIBBLE
109642
LICENSED PROFESSIONAL ENGINEER
7/3/20

aec Architectural Engineers Collaborative
Lamar Central
3800 N. Lamar Blvd.
Suite 330
Austin, Tx 78756
P 512.472.2111
www.aecollab.com
FIRM REG.#: F-1985
AEC JOB#: 17007

TYLER STATE PARK

HEADQUARTERS REPLACEMENT PHASE 1

PROJECT NUMBER: 112741

DATE: 07/03/2020
DESIGNED BY: KT
DRAWN BY: EV
REVIEWED BY: KT

no.	revision	date

SHEET TITLE

POP-UP ROOF FRAMING PLAN

SHEET NUMBER

S206.1

CONSTRUCTION DOCUMENTS

DOWEL SCHEDULE			
MARK	SIZE	A	B
DWL A	#4	8"	3'-0"
DWL B	#4	2'-6"	3'-0"
DWL C	#4	-	4'-0"
DWL D	#4	8"	6'-0"
DWL E	#4	-	6'-0"

NOTES:

1. SCHEDULED DOWELS ARE MARKED "DWL" ON THE SECTIONS AND DETAILS.
2. DOWEL SPACING TO BE THE SAME AS SLAB OR WALL REINFORCEMENT UNLESS OTHERWISE NOTED ON DETAILS.

1 TYPICAL DETAIL STANDARD DOWEL SCHEDULE
NO SCALE

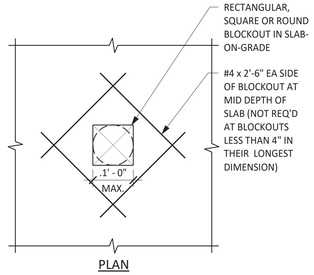

2 TYPICAL DETAIL ADDITIONAL REINFORCING AT BLOCKOUT IN SLAB-ON-GRADE
NO SCALE

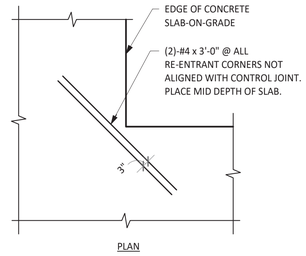

3 TYPICAL DETAIL SLAB-ON-GRADE RE-ENTRANT CORNER REINF.
NO SCALE

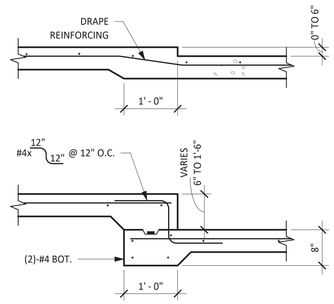

4 TYPICAL DETAIL DROP IN SLAB-ON-GRADE
NO SCALE

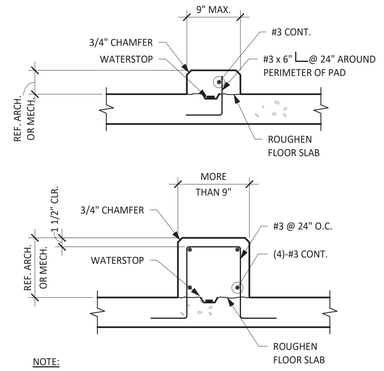

NOTE:

PROVIDE CONSTRUCTION JOINTS @ 20'-0" O.C. MAX.

5 TYPICAL DETAIL SLAB-ON-GRADE OR STRUCTURAL SLAB MECHANICAL CURB
NO SCALE

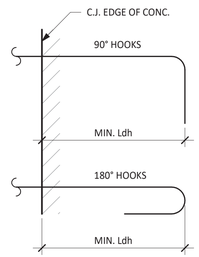

HOOK DEVELOPMENT LENGTH SCHEDULE, Ldh			
BAR SIZE	3000 psi	4000 psi	5000 psi
#3	9"	8"	7"
#4	11"	10"	9"
#5	1'-2"	1'-0"	11"
#6	1'-5"	1'-3"	1'-1"
#7	1'-8"	1'-5"	1'-3"
#8	1'-10"	1'-7"	1'-5"
#9	2'-1"	1'-10"	1'-8"
#10	2'-4"	2'-1"	1'-10"
#11	2'-7"	2'-3"	2'-0"

NOTES:

1. TABULATED VALUES ARE BASED ON GRADE 60 REINFORCING BARS AND NORMAL WEIGHT CONCRETE.
2. FOR TABULATED BARS SIZES ONLY:
   A. IF CONCRETE COVER PER ACI 318-14, SECTION 25.4.3.2, TABLE 25.4.3.2, THEN A MODIFICATION FACTOR OF 0.7 MAY BE APPLIED BUT THE LENGTH MUST NOT BE LESS THAN 8 x db NOR 6 IN.
   B. IF HOOK IS ENCLOSED IN TIES OR STIRRUPS PER ACI 318-14, SECTION 25.4.3.2, TABLE 25.4.3.2, THEN A MODIFICATION FACTOR OF 0.8 MAY BE APPLIED BUT THE LENGTH MUST NOT BE LESS THAN 8 x db NOR 6 IN.
3. FOR EPOXY-COATED HOOKS, MULTIPLY THE TABULATED VALUES BY 1.2.
4. FOR LIGHTWEIGHT CONCRETE, INCREASE THE TABULATED VALUES BY 1/3.

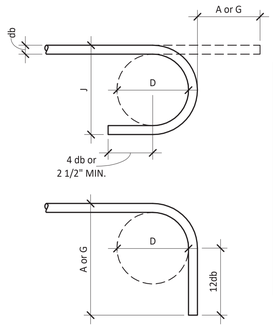

STANDARD HOOK SCHEDULE					
BAR SIZE	D	180° HOOK		90° HOOK	
		A or G	J	A or G	
#3	2 1/4"	5"	3"	6"	
#4	3"	6"	4"	8"	
#5	3 3/4"	7"	5"	10"	
#6	4 1/2"	8"	6"	12"	
#7	5 1/4"	10"	7"	1'-2"	
#8	6"	11"	8"	1'-4"	
#9	9 1/2"	1'-3"	11 3/4"	1'-7"	
#10	10 3/4"	1'-5"	1'-1 1/4"	1'-10"	
#11	12"	1'-7"	1'-2 3/4"	2'-0"	

6 TYPICAL DETAIL STANDARD HOOK SCHEDULE
NO SCALE

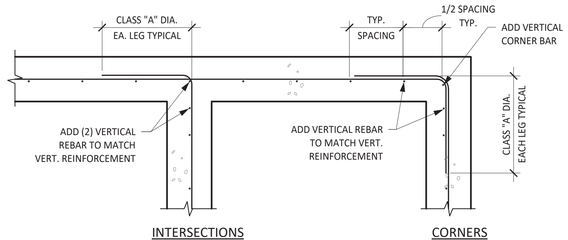

PLAN - ONE CURTAIN OF REINFORCEMENT

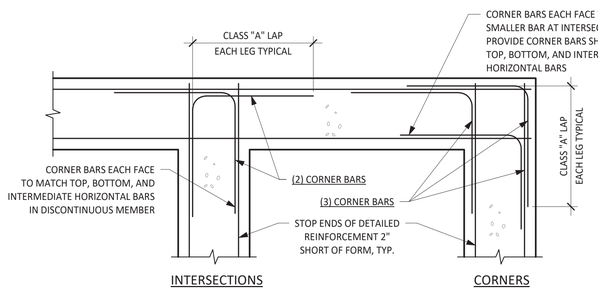

PLAN - TWO CURTAINS OF REINFORCEMENT

NOTES:

1. WHERE 90 DEGREE HOOKS ARE SCHEDULED OR DETAILED FOR BARS, CORNER BARS MAY BE OMITTED FOR THAT LAYER.
2. MATCH SIZE, LOCATION AND NUMBER OF HORIZONTAL BEAM AND WALL BARS, EXCEPT THAT WHERE THERE ARE MORE THAN 2 TOP OR BOTTOM BARS, ONLY THE INSIDE AND OUTSIDE BARS MUST BE MATCHED.

7 TYPICAL DETAIL WALL OR GRADE BEAM REINFORCING
NO SCALE

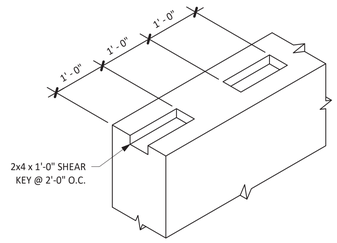

INTERMITTENT ABOVE GRADE

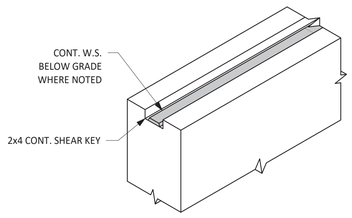

CONTINUOUS BELOW GRADE

8 TYPICAL DETAIL GRADE BEAM SHEAR KEY AT HORIZONTAL JOINT
NO SCALE

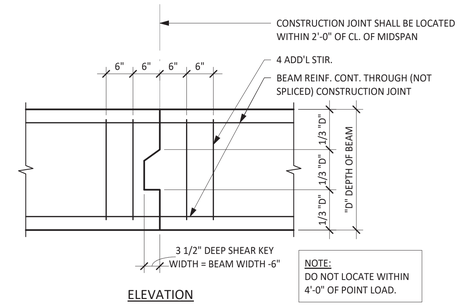

NOTE:
DO NOT LOCATE WITHIN 4'-0" OF POINT LOAD.

ELEVATION

9 TYPICAL DETAIL BEAM CONSTRUCTION JOINT
NO SCALE

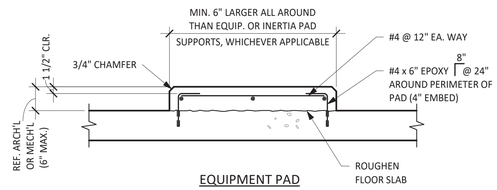

EQUIPMENT PAD

NOTES:

1. PADS PER DETAIL TO BE PROVIDED UNDER EQUIPMENT SUPPORTED ON SLAB-ON-GRADE OR ELEVATED SLABS.
2. COORDINATE MECHANICAL PAD SIZE, LOCATION AND EMBEDDED ITEMS WITH MEP DRAWINGS AND EQUIPMENT MANUFACTURER.

10 TYPICAL DETAIL MECHANICAL PAD
NO SCALE

TEXAS PARKS & WILDLIFE

FORD POWELL &CARSON Architects & Planners, Inc.
Architecture
Planning
Preservation
Interior Design
1138 East Commerce Street
San Antonio, Texas 78205
210/226-1246
FPC# 92705

STATE OF TEXAS
KARINA TRIBBLE
109642
LICENSED PROFESSIONAL ENGINEER
7/3/20

aec Architectural Engineers Architecture
Lamar Central
3800 N. Lamar Blvd. Suite 330
Austin, Tx 78756
P 512.472.2111
www.aecollab.com
FIRM REG #: F-1985
AEC JOB#: 17007

TYLER STATE PARK
HEADQUARTERS REPLACEMENT PHASE 1
PROJECT NUMBER: 112741

DATE: 07/03/2020
DESIGNED BY: KT
DRAWN BY: EV
REVIEWED BY: KT

no.	revision	date

SHEET TITLE
CONCRETE TYPICAL DETAILS

SHEET NUMBER
S301

CONSTRUCTION DOCUMENTS

REINFORCEMENT SPLICE LENGTH SCHEDULE						
	f'c=3000 psi CONCRETE		f'c=4000 psi CONCRETE		f'c=5000 psi CONCRETE	
CLASS / BAR SIZE	"A"	"B"	"A"	"B"	"A"	"B"
#3	1'-5"	1'-10"	1'-3"	1'-7"	1'-1"	1'-5"
#4	1'-10"	2'-5"	1'-7"	2'-1"	1'-5"	1'-10"
#5	2'-4"	3'-0"	2'-0"	2'-7"	1'-10"	2'-4"
#6	2'-9"	3'-7"	2'-5"	3'-1"	2'-2"	2'-9"
#7	4'-1"	5'-3"	3'-6"	4'-6"	3'-1"	4'-1"
#8	4'-7"	6'-0"	4'-0"	5'-2"	3'-7"	4'-7"
#9	5'-2"	6'-10"	4'-6"	5'-10"	4'-0"	5'-3"
#10	5'-10"	7'-7"	5'-1"	6'-7"	4'-6"	5'-10"
#11	6'-6"	8'-5"	5'-7"	7'-3"	5'-0"	6'-6"

NOTES:

1. WHERE SPLICE TYPE IS NOT INDICATED, USE CLASS "B" SPLICE.
2. LAP LENGTHS LISTED ABOVE APPLY UNDER THE FOLLOWING CONDITIONS:
   A. BEAM & COLUMN BARS ARE SPACED AT LEAST 1 BAR DIAMETERS O.C. WITH CLEAR COVER NOT LESS THAN 1 BAR DIAMETER.
   B. WALL & SLAB BARS ARE SPACED AT LEAST 2 BAR DIA. O.C.
   C. FOR UNCOATED AND ZINC-COATED (GALVANIZED) REINFORCEMENT.
   D. FOR REINFORCEMENT THAT CONFORMS DEFORMED NEW BILLET STEEL BARS IN ACCORDANCE TO ASTM A615 GR. 60.
3. WHERE CLEAR COVER OR CLEAR SPACING FOR MASONRY REINF. IS LESS THAN 5 BAR DIAMETERS, INCREASE SPLICE LENGTHS SHOWN BY MULTIPLYING LENGTHS BY MAX. RATIO OF 5 BAR DIAMETERS TO CLEAR COVER OR SPACING.
4. FOR HORIZ. TOP BARS w/ 12" OF CONCRETE CAST BELOW, MULTIPLY TABULATIONS BY 1.3.
5. WHERE A LARGER BAR LAPS A SMALLER BAR, THE SMALLER SCHEDULED LAP LENGTH APPLIES U.O.N.
6. REFER TO "CONCRETE REINFORCING" SECTION OF THE GENERAL NOTES FOR FURTHER INFORMATION.
7. FOR MASONRY REINFORCEMENT SPLICE LENGTH SCHEDULE, SEE MASONRY DETAILS.
8. FOR LIGHTWEIGHT CONCRETE, MULTIPLY TABULATIONS BY 1.3.

TYPICAL DETAIL
1 LAP SPLICE SCHEDULE
NO SCALE

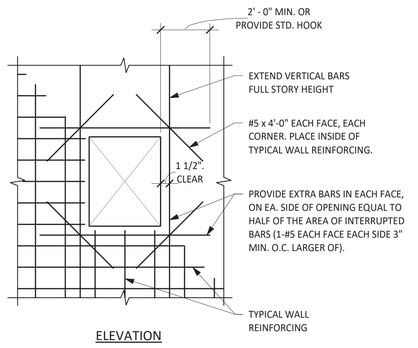

ELEVATION

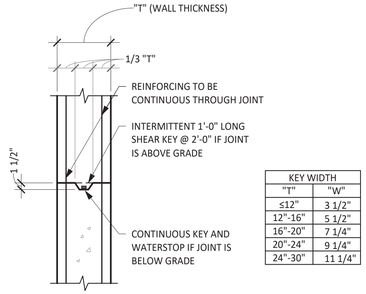

KEY WIDTH	
"T"	"W"
≤12"	3 1/2"
12"-16"	5 1/2"
16"-20"	7 1/4"
20"-24"	9 1/4"
24"-30"	11 1/4"

TYPICAL DETAIL
3 REINF. AT CONCRETE WALL OPENING
NO SCALE

TYPICAL DETAIL
4 HORIZONTAL CONSTRUCTION JOINT IN CONCRETE WALL
NO SCALE

TYPICAL DETAIL
5 DROP IN SLAB-ON-GRADE
NO SCALE

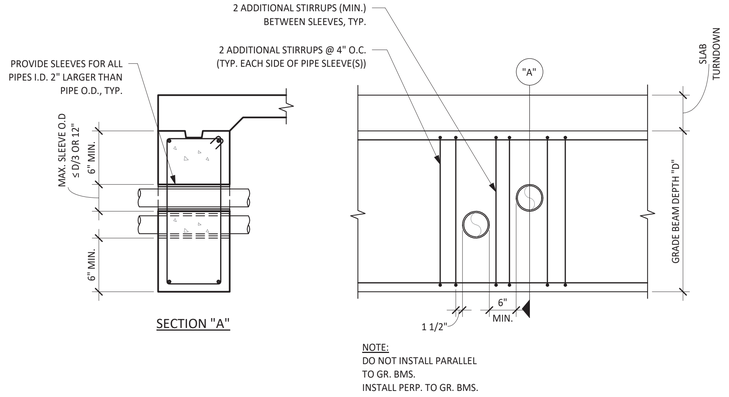

SECTION "A"

NOTE:
DO NOT INSTALL PARALLEL
TO GR. BMS.
INSTALL PERP. TO GR. BMS.

TYPICAL DETAIL
2 HORIZONTAL PIPE PENETRATIONS THROUGH GRADE BEAM
NO SCALE

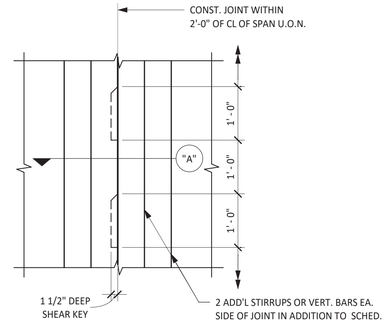

ELEVATION

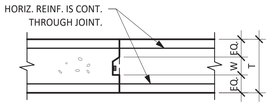

KEY WIDTH	
T	W
≤12"	3 1/2"
12"-16"	5 1/2"
16"-20"	7 1/4"
20"-24"	9 1/4"
24"-30"	11 1/4"

SECTION "A"

NOTES:

1. THIS DETAIL APPLIES TO GRADE BEAMS DEEPER THAN 4'-0" AND ALL WALLS.
2. HORIZ. REINF. (NOT SHOWN) IS CONT. THRU CONSTRUCTION JOINT.

TYPICAL DETAIL
6 DEEP GRADE BEAM AND WALL VERTICAL CONSTRUCTION JOINT
NO SCALE

TEXAS PARKS & WILDLIFE

FORD POWELL &CARSON
Architects & Planners, Inc.
Architecture
Planning
Preservation
Interior Design
1138 East Commerce Street
San Antonio, Texas 78205
210/226-1246
FPC# 92705

STATE OF TEXAS
KARINA TRIBBLE
109642
LICENSED
PROFESSIONAL ENGINEER
7/3/20

aec Architectural Engineers Collaborative
Austin, Tx 78756
Lamar Central
P 512.472.2111
3800 N. Lamar Blvd.
www.aecollab.com
Suite 330
F 5985
FIRM REG #:
17007
AEC JOB#:

TYLER STATE PARK
HEADQUARTERS REPLACEMENT PHASE 1
PROJECT NUMBER: 112741

DATE: 07/03/2020
DESIGNED BY: KT
DRAWN BY: EV
REVIEWED BY: KT

no.	revision	date

SHEET TITLE
CONCRETE
TYPICAL DETAILS

SHEET NUMBER
S302

CONSTRUCTION DOCUMENTS

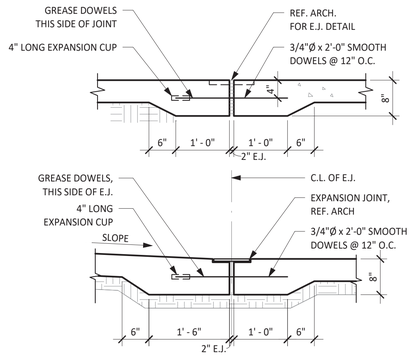

1 TYPICAL DETAIL
EXPANSION JOINT
NO SCALE

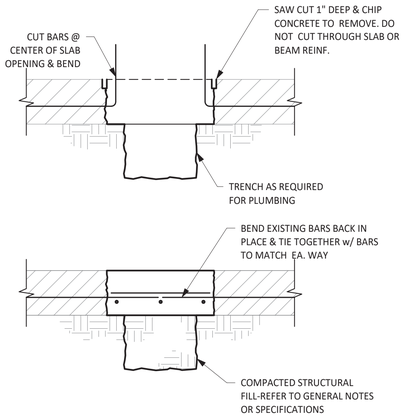

2 TYPICAL DETAIL
S.O.G. CUT FOR UTILITY TRENCHING
NO SCALE

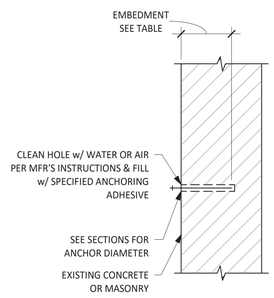

ADHESIVE ANCHOR NOTES:

1. REFER TO GENERAL NOTES FOR ADHESIVE ANCHOR TYPE.
2. LOCATE EXISTING REINFORCING STEEL IN THE CONCRETE USING NON-DESTRUCTIVE METHODS & POSITION ANCHOR LOCATIONS TO AVOID CONFLICTS WITH EXISTING REINFORCING. ANCHOR LOCATIONS CAN BE ADJUSTED BY A MAXIMUM OF 1 1/2" FROM DETAILED LOCATIONS TO AVOID CONFLICTS, UNLESS NOTED OTHERWISE.
3. BASED ON FIELD VERIFIED LOCATIONS OF REINFORCING STEEL & EMBEDDED ITEMS, THE CONTRACTOR SHALL CREATE TEMPLATES FOR EACH ANCHOR GROUP.
4. ALL ABANDONED HOLES SHALL BE FILLED WITH NONSHRINK GROUT.
5. HOLES IN CONNECTION PLATES SHALL BE NO MORE THAN 1/16" LARGER THAN THE ANCHOR DIAMETER. IF LARGER HOLES ARE REQUIRED FOR ERECTION PURPOSES, PROVIDE 1/4"x3x3 PLATE WASHERS CONTINUOUSLY WELDED TO THE CONNECTION PLATE.

ANCHOR INSTALLATION INFORMATION			
ANCHOR DIAMETER	1/2"	5/8"	3/4"
HOLE DIAMETER	9/16"	11/16"	13/16"
EMBEDMENT FOR HAS STD.	4 1/4"	5"	6 5/8"
MAX. TORQUE (ft.-lbs)	30	75	150

3 TYPICAL DETAIL
ADHESIVE ANCHOR FOR SOLID & GROUTED MASONRY & CONCRETE
NO SCALE

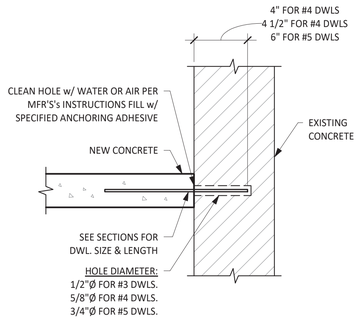

ADHESIVE DOWEL NOTES:

1. REF. GENERAL NOTES FOR ADHESIVE DOWELING SYSTEMS.
2. LOCATE EXISTING REINFORCING STEEL IN THE CONCRETE USING NON-DESTRUCTIVE METHODS & POSITION DOWEL LOCATIONS TO AVOID CONFLICTS WITH EXISTING REINFORCING.
3. ALL ABANDONED HOLES SHALL BE FILLED WITH NONSHRINK GROUT.

4 TYPICAL DETAIL
ADHESIVE DOWELING
NO SCALE

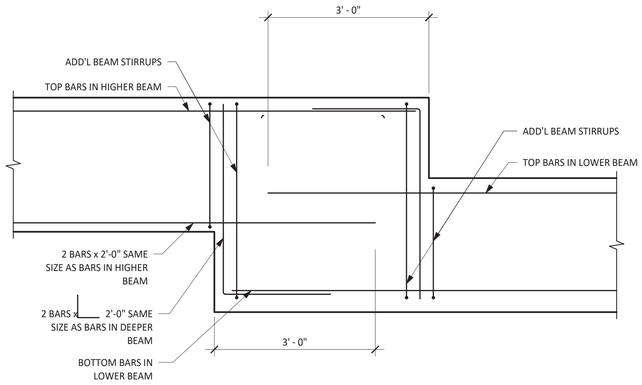

5 TYPICAL DETAIL
STEP IN GRADE BEAM
NO SCALE

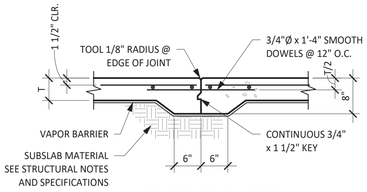

CONSTRUCTION JOINT

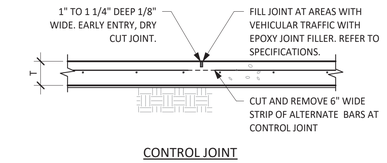

CONTROL JOINT

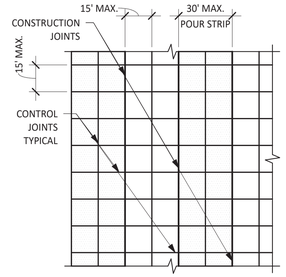

POUR STRIP LAYOUT

NOTES:

1. SEE PLAN FOR THICKNESS OF SLAB (T) AND REINFORCING.
2. PROVIDE A CONSTRUCTION OR A CONTROL JOINT ON THE CENTERLINES OF COLUMNS, U.O.N.
3. SLABS SHALL BE POURED IN A STRIP PATTERN AND CUT IN A JOINT PATTERN w/ WIDTHS NOT EXCEEDING THOSE SHOWN, U.O.N. CONTRACTOR SHALL SUBMIT JOINT PATTERNS FOR REVIEW.
4. IF METAL FORMS ARE USED, REMOVE THEM BEFORE POURING ADJACENT SLAB.
5. FOR SLABS WITH THICKNESS (T) GREATER THAN 6", THICKENED EDGES ARE NOT REQUIRED AT JOINTS.
6. INFILL STRIPS CAN BE PLACED AFTER INITIAL SLAB STRIPS HAVE CURED FOR 3 DAYS.

6 TYPICAL DETAIL
SLAB-ON-GRADE
NO SCALE

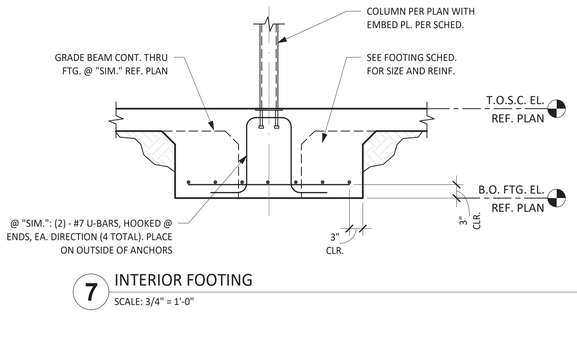

7 INTERIOR FOOTING
SCALE: 3/4" = 1'-0"

FOOTING SCHEDULE					
	FOOTING SIZE			REINFORCING	
MARK	LENGTH	WIDTH	MIN. DEPTH	LONG DIRECTION	SHORT DIRECTION
F2.0	2'-0"	2'-0"	1'-0"	(3) - #3, B	(3) - #3, B
F5.0	5'-0"	5'-0"	1'-0"	(5) - #5, B	(5) - #5, B
F8.0	8'-10.5"	4'-0"	1'-0"	(4) - #5, T&B	(8) - #5, B

TEXAS PARKS & WILDLIFE

FORD POWELL &CARSON
Architects & Planners, Inc.
Architecture
Planning
Preservation
Interior Design
1138 East Commerce Street
San Antonio, Texas 78205
210/226-1246
FPC# 92705

STATE OF TEXAS
KARINA TRIBBLE
109642
LICENSED
PROFESSIONAL
ENGINEER
7/3/20

aec Architectural Engineers Collaborative
Lamar Central
3800 N. Lamar Blvd.
Suite 330
Austin, Tx 78756
P 512.472.2111
www.aecollab.com
FIRM REG #: F-5985
AEC JOB#: 17007

TYLER STATE PARK
HEADQUARTERS REPLACEMENT PHASE 1
PROJECT NUMBER: 112741

DATE: 07/03/2020
DESIGNED BY: KT
DRAWN BY: EV
REVIEWED BY: KT

no.	revision	date

SHEET TITLE
CONCRETE
TYPICAL DETAILS

SHEET NUMBER
S303

CONSTRUCTION DOCUMENTS

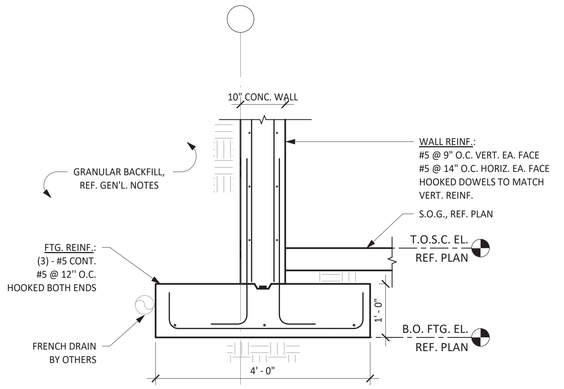

1 SECTION - FOUNDATION WALL AT BASEMENT
SCALE: 3/4" = 1'-0"

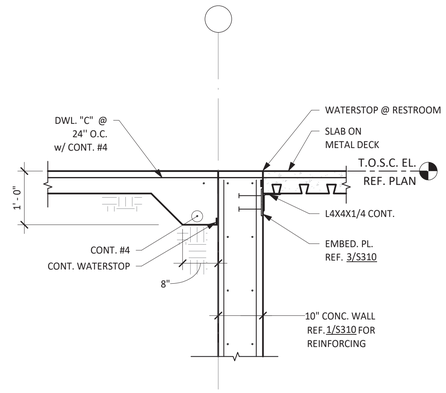

2 SECTION - FOUNDATION WALL AT SLAB ON DECK
SCALE: 3/4" = 1'-0"

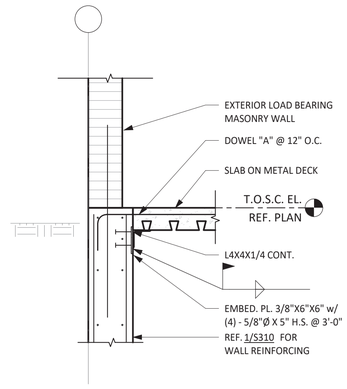

3 SECTION - FOUNDATION WALL AT EXTERIOR CMU
SCALE: 3/4" = 1'-0"

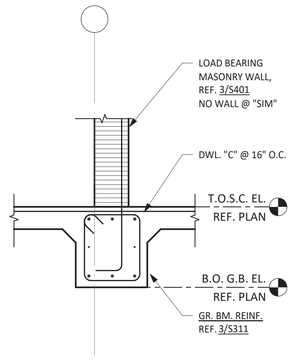

4 SECTION - GRADE BEAM BELOW CMU
SCALE: 3/4" = 1'-0"

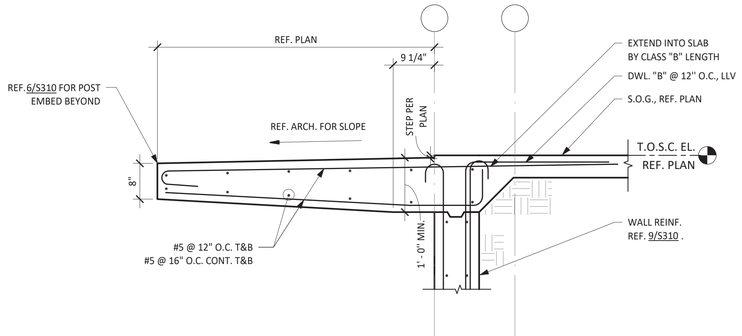

5 SECTION - CANTILEVERED BALCONY
SCALE: 3/4" = 1'-0"

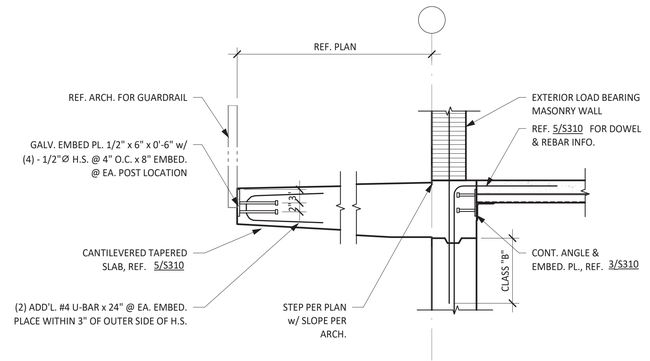

6 SECTION - CANTILEVERED BALCONY
SCALE: 3/4" = 1'-0"

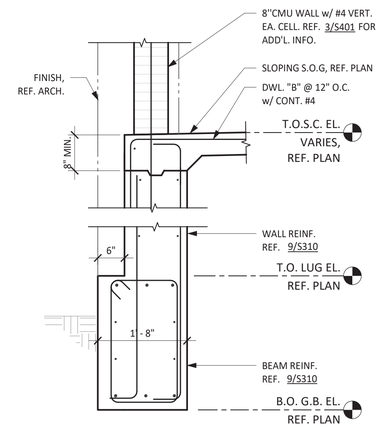

7 SECTION - DEEP GRADE BEAM AT MEP YARD
SCALE: 3/4" = 1'-0"

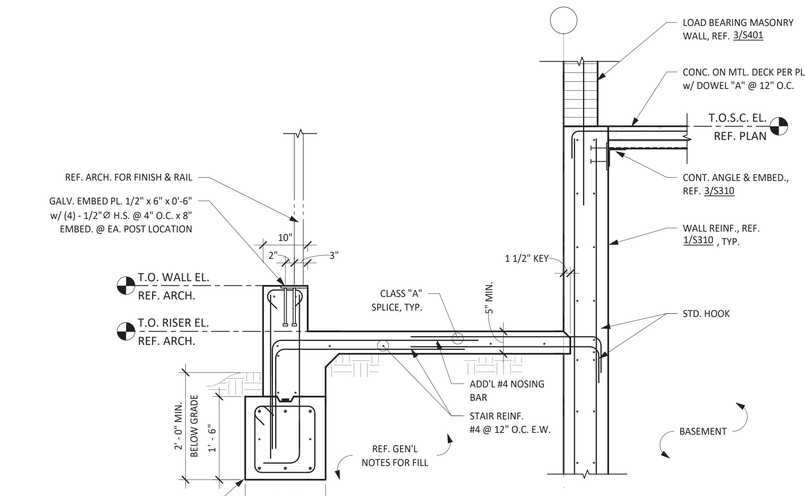

8 SECTION - BASEMENT AT STAIR
SCALE: 3/4" = 1'-0"

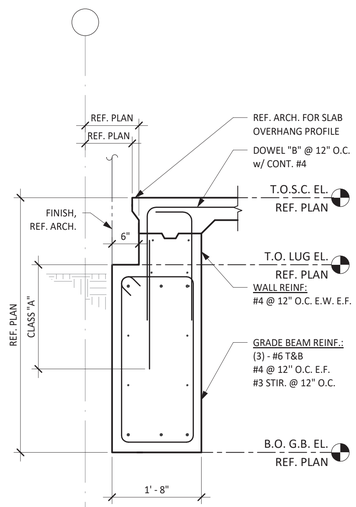

9 SECTION - DEEP GRADE BEAM
SCALE: 3/4" = 1'-0"

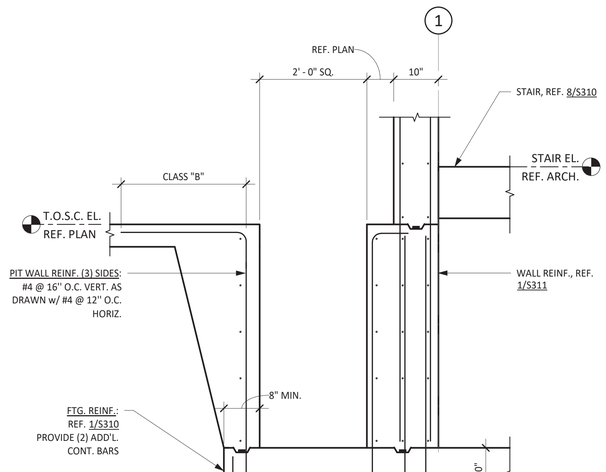

10 DETAIL - SUMP PIT
SCALE: 3/4" = 1'-0"

TEXAS PARKS & WILDLIFE

FORD POWELL &CARSON
Architects & Planners, Inc.
Architecture
Planning
Preservation
Interior Design
1138 East Commerce Street
San Antonio, Texas 78205
210/226-1246
FPC# 92705

STATE OF TEXAS
KARINA TRIBBLE
109642
LICENSED ARCHITECT
PROFESSIONAL
7/9/20

aec Architectural Engineers Collaborative
Lamar Central
3800 N. Lamar Blvd.
Suite 330
Austin, Tx 78756
P 512.472.2111
www.aecollab.com
F-5985
17007
FIRM REG #:
AEC CONS:

TYLER STATE PARK
HEADQUARTERS REPLACEMENT PHASE 1
PROJECT NUMBER: 112741

DATE: 07/03/2020
DESIGNED BY: KT
DRAWN BY: EV
REVIEWED BY: KT

no.	revision	date

SHEET TITLE
CONCRETE DETAILS

SHEET NUMBER
S310

CONSTRUCTION DOCUMENTS

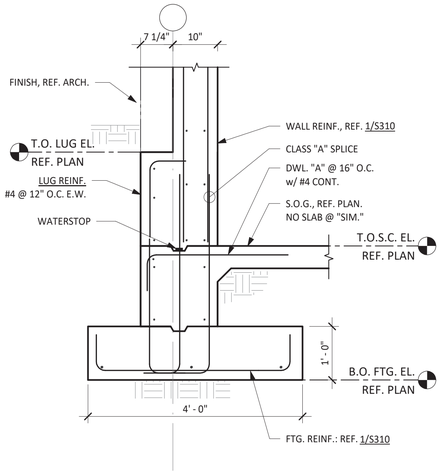

1 SECTION - DEEP FOOTING WITH LUG

SCALE: 3/4" = 1'-0"

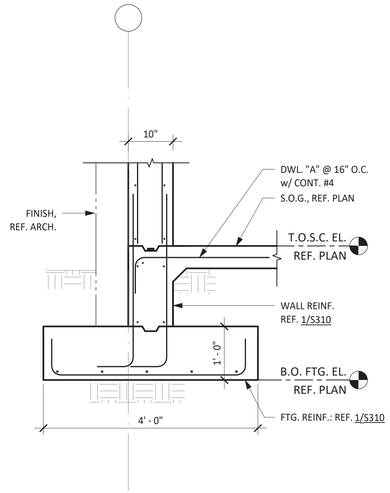

2 SECTION - DEEP FOOTING

SCALE: 3/4" = 1'-0"

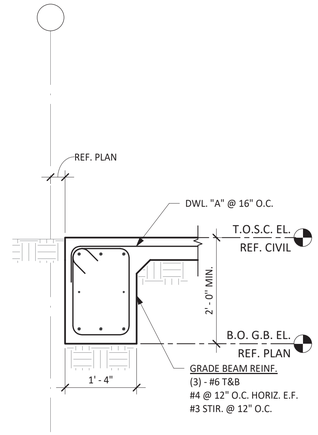

3 SECTION - GRADE BEAM

SCALE: 3/4" = 1'-0"

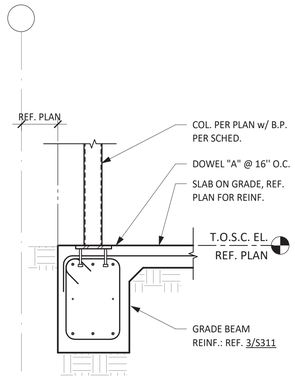

4 SECTION - FEE BOOTH GRADE BEAM

SCALE: 3/4" = 1'-0"

TEXAS PARKS & WILDLIFE

FORD POWELL &CARSON
Architects & Planners, Inc.
Architecture
Planning
Preservation
Interior Design
1138 East Commerce Street
San Antonio, Texas 78205
210/226-1246
FPC# 92705

STATE OF TEXAS
KARINA TRIBBLE
109642
LICENSED PROFESSIONAL ENGINEER
7/3/20

aec Architectural Engineers Architecture
Lamar Central
3800 N. Lamar Blvd.
Suite 330
Austin, Tx 78756
P 512.472.2111
www.aecollab.com
FIRM REG.#: F-1985
AEC JOB#: 17007

TYLER STATE PARK

HEADQUARTERS REPLACEMENT PHASE 1

PROJECT NUMBER: 112741

DATE: 07/03/2020
DESIGNED BY: KT
DRAWN BY: EV
REVIEWED BY: KT

no.	revision	date

SHEET TITLE

CONCRETE DETAILS

SHEET NUMBER

S311

CONSTRUCTION DOCUMENTS

REINFORCEMENT SPLICE LENGTH SCHEDULE	
f'm=1500 psi MASONRY	
BAR SIZE	MASONRY
#3	1'-4"
#4	1'-9"
#5	2'-8"
#6	4'-6"
#7	5'-3"
#8	6'-0"
#9	6'-9"

NOTES:

1. LAP LENGTHS LISTED ABOVE APPLY UNDER THE FOLLOWING CONDITIONS:
   - A. REINFORCING BARS ARE GRADE 60 (Fy=60,000 PSI)
   - B. MASONRY STRENGTH IS AT LEAST 1,500 PSI
   - C. WALL BARS ARE SPACED AT LEAST 5 BAR DIA. O.C.
   - D. CLEAR COVER ASSUMED TO BE 2 1/2" FOR BAR SIZES OF #6 AND LESS.
   - E. CLEAR COVER ASSUMED TO BE 3" FOR #7 BARS AND 4" FOR #8 AND #9 BARS.
2. WHERE CLEAR COVER OR CLEAR SPACING FOR MASONRY REINF. IS LESS, INCREASE SPLICE LENGTHS SHOWN BY MULTIPLYING LENGTHS BY MAX. RATIO OF ASSUMED CLEAR COVER TO ACTUAL CLEAR COVER.
3. WHERE A LARGER BAR LAPS A SMALLER BAR, THE SMALLER SCHEDULED LAP LENGTH APPLIES.
4. SEE CONCRETE TYPICAL DETAILS FOR DOWELS AND HOOK LENGTHS.

1 TYPICAL DETAIL MASONRY LAP SPLICE SCHEDULE
NO SCALE

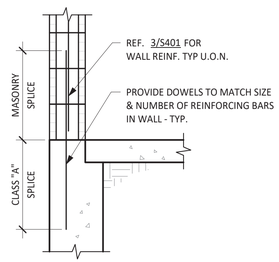

CAST-IN-PLACE (STRAIGHT BAR)

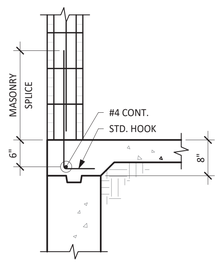

CAST-IN-PLACE (HOOKED BAR)

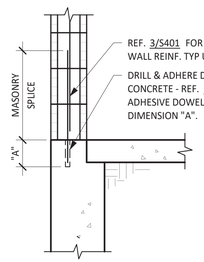

DRILLED-IN-ADHESIVE ALTERNATE

NOTES:

1. MASONRY DOWEL TO MATCH SIZE & SPACING OF VERTICAL WALL REINF. TYP.
2. REFER TO REINFORCEMENT SPLICE LENGTH SCHEDULE IN 1/S302 FOR ADD'L INFO.

2 TYPICAL DETAIL WALL ANCHORAGE
NO SCALE

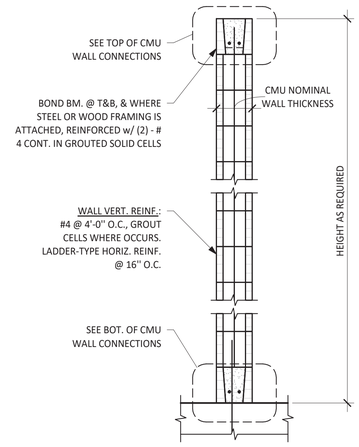

3 TYPICAL DETAIL WALL SECTION
NO SCALE

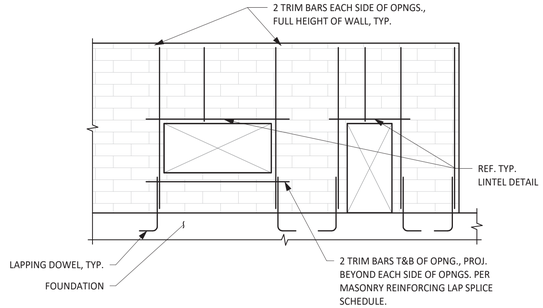

TYPICAL ELEVATION

NOTES:

1. TRIM BAR SIZES TO MATCH WALL REINFORCING, #5 MIN.
2. TRIM BARS ARE IN ADDITION TO TYPICAL WALL REINFORCING
3. VERTICAL STEEL SHALL BE FULL HEIGHT EACH SIDE OF OPENINGS. ROVIDE LAP PLICES TO MATCH VERTICAL STEEL.
4. APPLIED ONLY TO WALLS 2'-0" OR THINNER. FOR OPENINGS THROUGH THICKER WALLS, SEE STRUCTURAL ENGINEER FOR SPECIAL DETAILS.

4 TYPICAL DETAIL MINIMUM REINFORCEMENT AROUND CMU WALL OPENINGS
NO SCALE

MASONRY LOOSE LINTEL SCHEDULE	
OPENING	LINTEL SIZE
UP TO 5' - 0"	L6 x 4 x 5/16 LLH
5' - 0" TO 7' - 0"	L6 x 4 x 3/8 LLH

NOTE:

1. LINTEL ANGLES SHALL BE HOT DIP GALVANIZED.
2. PROVIDE 3/8" GAP IN MORTAR AT ENDS OF ANGLE. FORM GAP WITH BACKER ROD.
3. PROVIDE 8" BEARING AT EACH END OF LINTEL ANGLE.

5 TYPICAL DETAIL MASONRY LOOSE LINTEL
NO SCALE

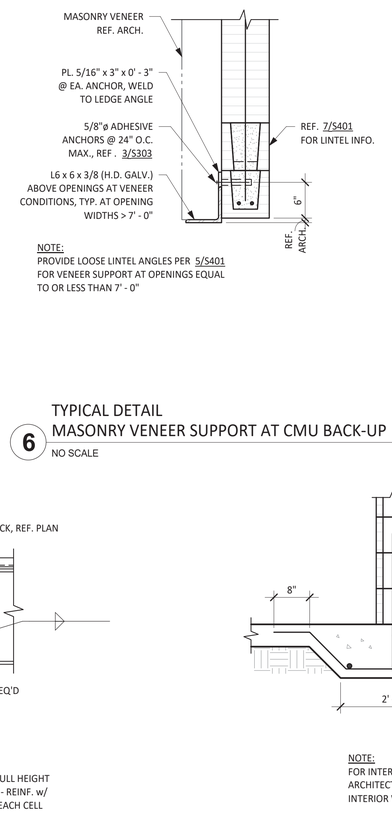

NOTE:
PROVIDE LOOSE LINTEL ANGLES PER 5/S401 FOR VENEER SUPPORT AT OPENINGS EQUAL TO OR LESS THAN 7' - 0"

6 TYPICAL DETAIL MASONRY VENEER SUPPORT AT CMU BACK-UP
NO SCALE

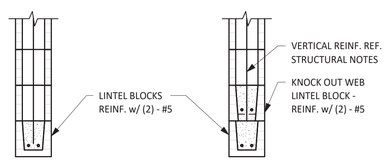

OPENING < 4'-0"

OPENING 4'-0" TO 10'-0"

NOTES:

1. REFER TO ARCHITECTURAL DRAWINGS FOR OPENING SIZES AND LOCATIONS.
2. EXTEND BOND BEAM 8" EACH SIDE OF OPENING.
3. PROVIDE GROUTED VERTICAL CELL EACH SIDE OF OPENING - GROUT TO UNDERSIDE OF BOND BEAM - REINF. w/ #5.

7 TYPICAL DETAIL LINTEL
NO SCALE

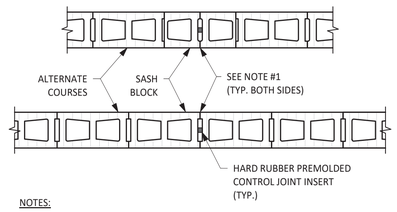

NOTES:

1. USE SEALANT BOTH SIDES FULL HEIGHT OF WALL.
2. MAXIMUM CONTROL JOINT SPACING IS 20'-0" O.C.
3. WHERE POSSIBLE, POSITION CMU WALL CONTROL JOINT TO COINCIDE WITH SLAB-ON-GRADE CONTROL/CONSTRUCTION JOINTS.
4. SUBMIT A CMU CONTROL JOINT PLAN TO THE ARCHITECT FOR REVIEW AND APPROVAL.
5. IN LIEU OF HARD RUBBER PREMOLDED CONTROL JOINT INSERT AND SPECIAL SASH BLOCKS, A CONTROL JOINT SHEAR BAR (12" LONG x 1" WIDE x 1/4" THICK) MAY BE GROUTED INTO THE WALL AT THE CONTROL JOINT AT 16" O.C.

8 TYPICAL DETAIL WALL CONTROL JOINT
NO SCALE

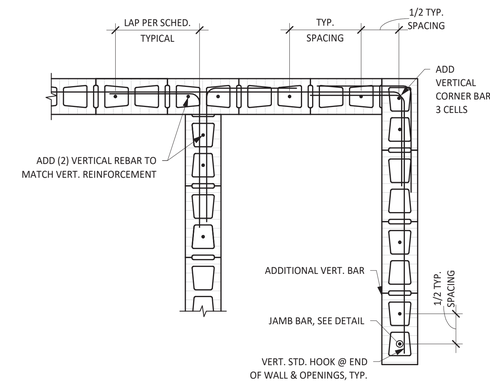

INTERSECTIONS CORNERS & JAMBS

9 TYPICAL DETAIL CMU WALL CORNER REINFORCING
NO SCALE

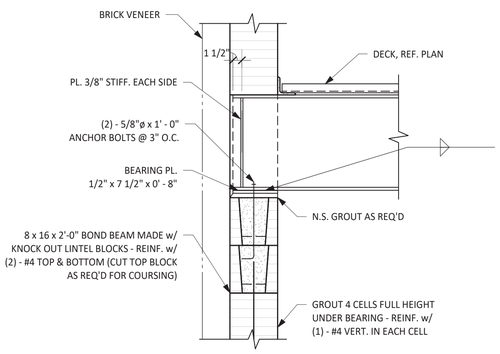

10 TYPICAL DETAIL MASONRY WALL BEARING STEEL BEAM
NO SCALE

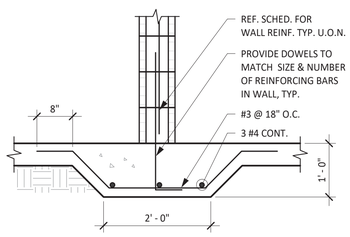

NOTE:
FOR INTERIOR PARTITIONS ONLY. REFER TO ARCHITECTURAL DRAWINGS FOR LOCATION OF INTERIOR WALLS, TYP.

11 TYPICAL DETAIL SLAB-ON-GRADE STIFFENER BEAM
NO SCALE

TEXAS PARKS & WILDLIFE

FORD POWELL &CARSON
Architects & Planners, Inc.
Architecture
Planning
Preservation
Interior Design
1138 East Commerce Street
San Antonio, Texas 78205
210/226-1246
FPC# 92705

STATE OF TEXAS
KARINA TRIBBLE
109642
LICENSED PROFESSIONAL ENGINEER
7/3/20

aec Architectural Engineers Collaborative
Lamar Central
3800 N. Lamar Blvd.
Suite 330
Austin, Tx 78756
P 512.472.2111
www.aecollab.com
FIRM REG.#: F-1985
AEC JOB#: 17007

TYLER STATE PARK
HEADQUARTERS REPLACEMENT PHASE 1
PROJECT NUMBER: 112741

DATE: 07/03/2020
DESIGNED BY: KT
DRAWN BY: EV
REVIEWED BY: KT

no.	revision	date

SHEET TITLE
MASONRY TYPICAL DETAILS

SHEET NUMBER
S401

CONSTRUCTION DOCUMENTS

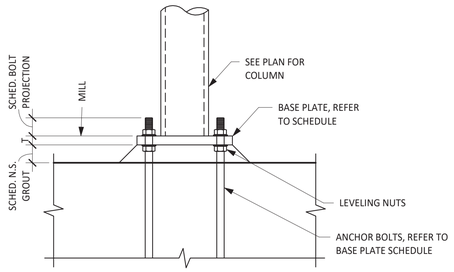

ROD PROJECTION AND GROUT THICKNESS SCHEDULE		
ANCHOR BOLT DIAMETER	ROD PROJECTION	GROUT THICKNESS
1" OR LESS	1 1/2"	
1 1/8" TO 1 1/2"	2"	
1 3/4" TO 2"	2 1/2"	
2 1/4" TO 2 1/2"	3"	

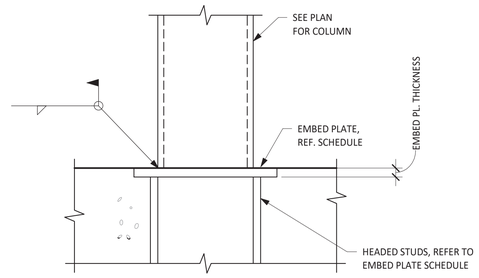

TYPICAL DETAIL
1 COLUMN BASE PLATES AND EMBED PLATES
NO SCALE

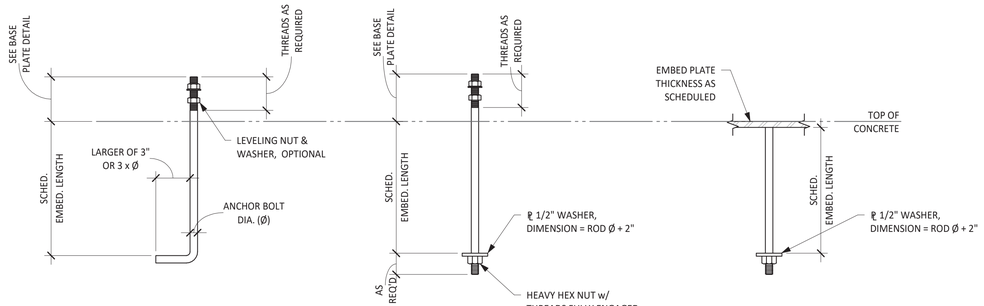

NOTES:

1. USE TYPE "A" ROD, TYPICAL, UNLESS NOTED OTHERWISE.
2. USE TYPE "B" ROD AT ALL WINDBRACE LOCATIONS.

TYPICAL DETAIL
2 ANCHOR ROD
NO SCALE

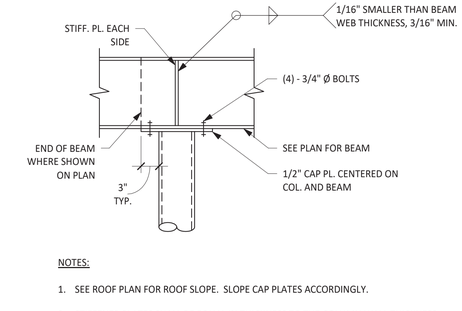

NOTES:

1. SEE ROOF PLAN FOR ROOF SLOPE. SLOPE CAP PLATES ACCORDINGLY.
2. STIFFENER PLATES SHALL BE EQUAL IN THICKNESS TO THE COLUMN WALL THICKNESS OR BEAM WEB THICKNESS, WHICHEVER IS GREATER.
3. CONNECT INTERSECTING BEAMS TO STIFFENER PLATES USING BOLTS IN SINGLE SHEAR DESIGNED FOR ECCENTRIC BEAM REACTION.

TYPICAL DETAIL
3 CAP PLATE-BOLTED CONNECTION
NO SCALE

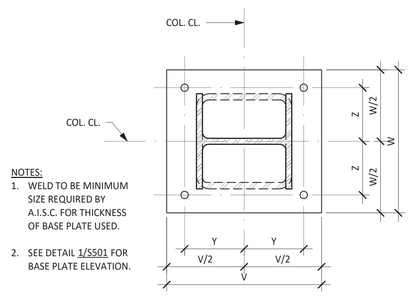

NOTES:
1. WELD TO BE MINIMUM SIZE REQUIRED BY A.I.S.C. FOR THICKNESS OF BASE PLATE USED.
2. SEE DETAIL 1/S501 FOR BASE PLATE ELEVATION.

ANCHOR ROD HOLES IN BASE PLATE			
ANCHOR ROD DIAMETER	HOLE DIAMETER	MIN. WASHER DIMENSION	MIN. WASHER THICKNESS
3/4"	1 5/16"	2"	1/4"
7/8"	1 9/16"	2 1/2"	5/16"
1"	1 13/16"	3"	3/8"
1 1/4"	2 1/16"	3"	1/2"
1 1/2"	2 5/16"	3 1/2"	1/2"
1 3/4"	2 3/4"	4"	5/8"
2"	3 1/4"	5"	3/4"
2 1/2"	3 1/4"	5 1/2"	7/8"

EMBED PLATE AND BASE PLATE SCHEDULE						
		ANCHOR ROD OR HEADED STUD				
MARK	PLATE DETAIL	TYPE	QTY.	DIA. (Ø)	EMBED LENGTH	NOTES
BP-1	5/S501	HEADED STUD	4	3/4"	1' - 0"	
BP-2	5/S501	HEADED STUD	4	3/4"	1' - 0"	PROVIDE 2" SQUARE WASHERS AT EACH STUD

TYPICAL DETAIL
4 EMBED PLATE AND BASE PLATE SCHEDULE
NO SCALE

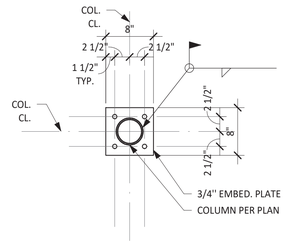

NOTES:
1. WELD TO BE 1/16" SMALLER THAN THICKNESS OF TUBE.
2. SEE DETAIL 1/S501 FOR EMBED PLATE ELEVATION.

EMBED PLATE DETAIL - BP-1, BP-2
5
NO SCALE

TEXAS PARKS & WILDLIFE

FORD POWELL &CARSON
Architects & Planners, Inc.
Architecture
Planning
Preservation
Interior Design
1138 East Commerce Street
San Antonio, Texas 78205
210/226-1246
FPC# 92705

STATE OF TEXAS
KARINA TRIBBLE
109642
LICENSED ARCHITECT
PROFESSIONAL
7/9/20

Architectural Engineers Architecturec
Lamar Central
3800 N. Lamar Blvd.
Suite 330
Austin, Tx 78756
P 512.472.2111
www.aecollab.com
FIRM REG.#: F-1985
AEC JOB#: 17007

TYLER STATE PARK
HEADQUARTERS REPLACEMENT PHASE 1
PROJECT NUMBER: 112741

DATE: 07/03/2020
DESIGNED BY: KT
DRAWN BY: EV
REVIEWED BY: KT

no.	revision	date

SHEET TITLE
STEEL TYPICAL DETAILS

SHEET NUMBER
S501

CONSTRUCTION DOCUMENTS

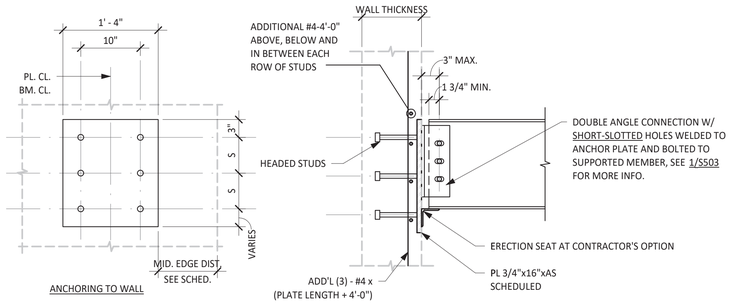

MAX. ALLOWABLE END REACTION (KIPS)	MAX. BEAM DEPTH	NUMBER OF STUDS	PLATE LENGTH (NOTE 3)	H.S. DIA.	SPACING (S)	EMBEDMENT DEPTH	MIN. DIST. TO FREE EDGE OF WALL	MIN. WALL THICKNESS
20 K	W16	4	1'-2"	3/4"	5"	5"	1'-2"	10"
40 K	W21	6	1'-7"	3/4"	5"	7"	4'-6"	10"
55 K	W27	8	2'-0"	3/4"	6"	7"	7'-8"	10"
75 K	W30	10	2'-6"	7/8"	6"	7"	7'-10"	12"
95 K	W36	14	3'-6"	7/8"	6"	9"	12'-0"	12"

NOTE:
1. MINIMUM EXISTING CONCRETE STRENGTH (f'c=4000 psi).
2. PROVIDE EMBED PLATE TO EQUAL OR EXCEED BEAM REACTION AS SPECIFIED FOR BEAM CONNECTION DESIGN.
3. PROVIDE EXTRA PLATE LENGTH IF REQUIRED FOR ERECTION SEAT.
4. ANCHOR MAY BE PLACED WITHIN 2'-0" MINIMUM OF CORNER, OTHERWISE ABIDE BY MIN. EDGE DIST.

TYPICAL DETAIL
STEEL BEAM TO CONCRETE WALL CONNECTION
1 NO SCALE

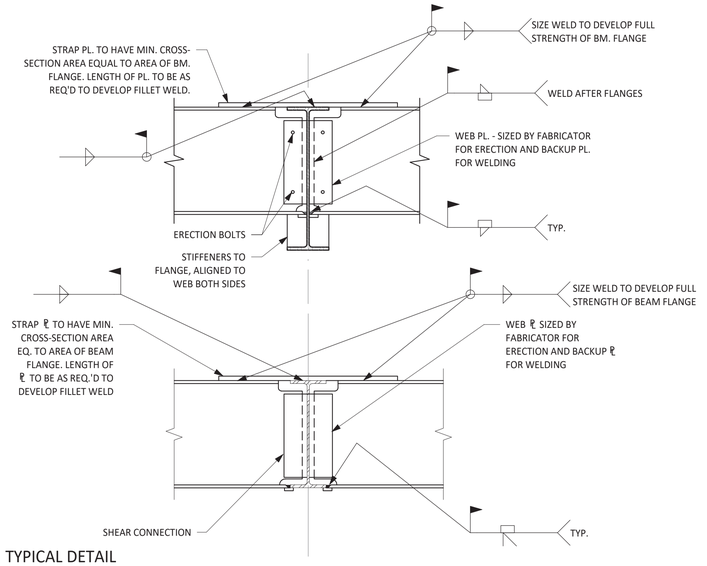

TYPICAL DETAIL
MOMENT CONNECTION
2 NO SCALE

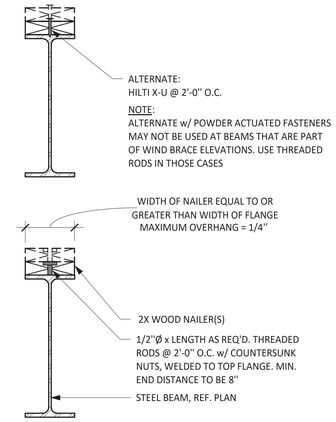

TYPICAL DETAIL
STEEL BEAM WITH NAILER
3 NO SCALE

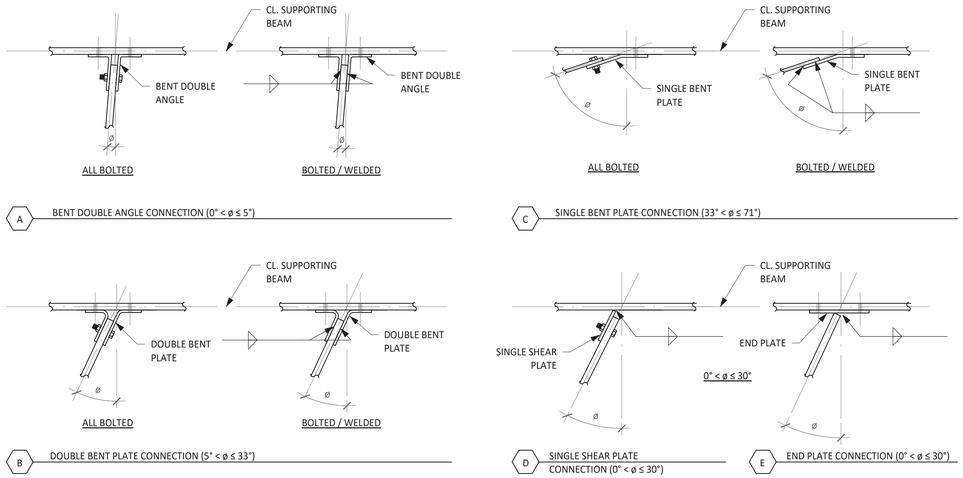

NOTE:

1) DESIGN SKEW CONNECTIONS FOR REQUIRED SHEAR, REF. GEN. NOTES FOR MORE INFORMATION.

2) ACCOUNT FOR ECCENTRICITIES IN CALCULATIONS.

TYPICAL DETAIL
SKEWED SIMPLE FRAMING CONNECTIONS
4 NO SCALE

TEXAS PARKS & WILDLIFE

FORD POWELL &CARSON
Architects & Planners, Inc.
Architecture
Planning
Preservation
Interior Design
1138 East Commerce Street
San Antonio, Texas 78205
210/226-1246
FPC# 92705

STATE OF TEXAS
KARINA TRIBBLE
109642
LICENSED ARCHITECT
PROFESSIONAL
7/3/20

aec Architectural Engineers Collaborative
Lamar Central
3800 N. Lamar Blvd.
Suite 330
Austin, Tx 78756
P 512.472.2111
www.aecollab.com
FIRM REG.#: F-1985
AEC JOB#: 17007

TYLER STATE PARK
HEADQUARTERS REPLACEMENT PHASE 1
PROJECT NUMBER: 112741

DATE: 07/03/2020
DESIGNED BY: KT
DRAWN BY: EV
REVIEWED BY: KT

no.	revision	date

SHEET TITLE
STEEL TYPICAL DETAILS

SHEET NUMBER
S502

CONSTRUCTION DOCUMENTS

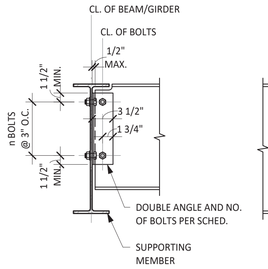

CONNECTION TO SUPPORTED MEMBER

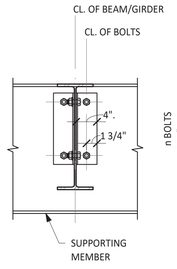

CONNECTION TO SUPPORTING MEMBER

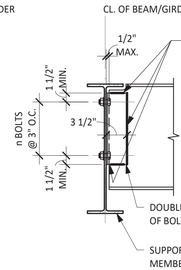

CONNECTION TO SUPPORTED MEMBER

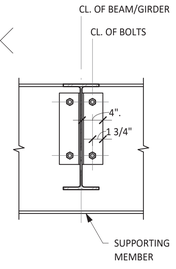

CONNECTION TO SUPPORTING MEMBER

1 ALL BOLTED CONNECTION

2 BOLTED/WELDED CONNECTION: ANGLES WELDED TO SUPPORTED BEAM

A BEAM TO BEAM CONNECTIONS

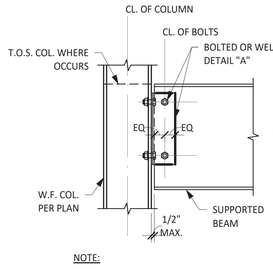

NOTE:

REF. DETAIL "A" FOR INFO NOT SHOWN

B BEAM TO COLUMN FLANGE CONNECTION

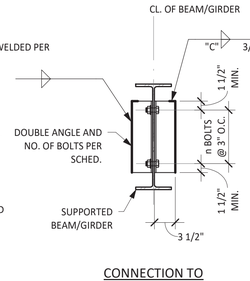

CONNECTION TO SUPPORTING MEMBER

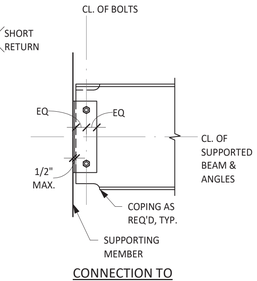

CONNECTION TO SUPPORTED MEMBER

C BOLTED/WELDED DOUBLE ANGLE CONNECTION: ANGLES WELDED TO SUPPORTING MEMBER

D DOUBLE ANGLE CONNECTION SCHEDULE

STANDARD DOUBLE ANGLE CONNECTION					
BEAM SIZE	NO. OF ROWS OF BOLTS(n)	BOLT DIAMETER	ANGLE THICKNESS	WELD SIZE C	MAX. BEAM REACTION (KIPS)
W8	2	3/4"	1/4"	1/4"	12
W10	2				16
W12	3				24
W14	3				30
W16	4				40
W18	5				50
W21	6				73
W24	7				85
W27	8	7/8"	5/16"	1/4"	97
W30	8				97
W33	8				97
W36	10				140
W40	10				140
W44	10				140

NOTES:

1. REFERENCE SCHEMATIC DETAILS OF TYPICAL STEEL CONNECTIONS FOR ADD'L INFO.
2. ALL OTHER CONNECTIONS DEVIATING FROM TYPICAL CONNECTIONS SHALL BE DESIGNED AND DETAILED BY A PROFESSIONAL ENGINEER WORKING UNDER THE GUIDANCE OF THE CONTRACTOR. REF. GENERAL NOTES UNDER "STRUCTURAL STEEL CONNECTIONS."
3. NOTED REACTIONS ARE FOR SERVICE LOADS.
4. BOLTS ARE A325N WITH STANDARD HOLES.
5. SCHEDULED SHEAR PLATE CONNECTIONS APPLY TO RIGHT ANGLE CONNECTIONS AND SKEWED CONNECTIONS UP TO 30° FROM RIGHT ANGLE.
6. BEAM CONNECTIONS ARE "STANDARD" UNLESS OTHERWISE NOTED ON PLAN.
7. WORKLINES ARE ON CENTERLINES OF BEAMS AND COLUMNS, U.O.N.
8. WELD CAPACITY BASED ON Exx = 70 KSI.
9. TABLE BASED ON LL4x31/2, A36 STEEL.
10. CONTRACTOR RESPONSIBLE FOR MEETING ALL O.S.H.A. REQUIREMENTS.

1 TYPICAL DETAIL SCHEMATIC DOUBLE-ANGLE FRAMING CONNECTIONS

NO SCALE

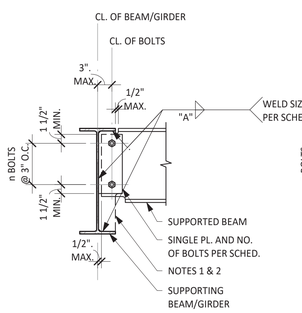

NOTES:

1. IF SUPPORTED BEAM IS LESS THAN 1/2 OF BOLTS TO CONNECTION AT GIRDER.
2. EXTEND TAB PLATE TO BOTTOM FLANGE AT PERIMETER CONDITION.

A ONE-SIDED CONNECTION - BEAMS TO GIRDER

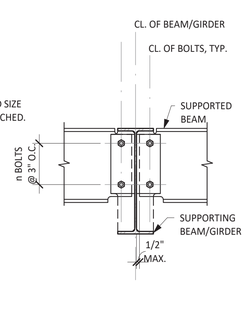

NOTE:

REF. DETAIL "A" FOR INFO NOT SHOWN

B TWO-SIDED CONNECTION - BEAMS TO GIRDER

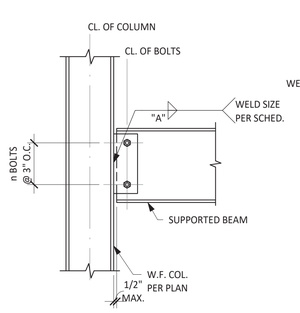

NOTE:

REF. DETAIL "A" FOR INFO NOT SHOWN

C BEAM TO COLUMN FLANGE CONNECTION

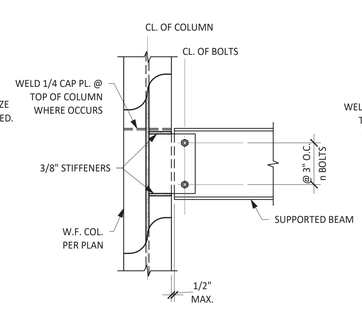

NOTE:

REF. DETAIL "A" FOR INFO NOT SHOWN

D EXTENDED PLATE, BEAM TO COLUMN WEB CONNECTION

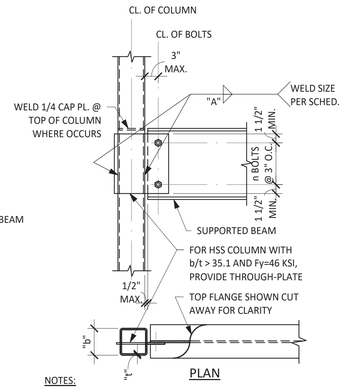

NOTES:

1. PIPE COLUMN CONNECTION IS SIMILAR.
2. SINGLE SHEAR PLATE CONNECTION SHOWN APPLIES TO RIGHT ANGLE CONNECTIONS AND SKEWED CONNECTIONS UP TO 30° FROM RIGHT ANGLE.

E EXTENDED PLATE BEAM TO COLUMN WEB CONNECTION

STANDARD SINGLE PLATE CONNECTION					
BEAM SIZE	NO. OF ROWS OF BOLTS(n)	BOLT DIAMETER	PLATE THICKNESS	WELD SIZE A	MAX. BEAM REACTION (KIPS)
W8	2	3/4"	1/4"	1/4"	12
W10	2				16
W12	3				24
W14	3		5/16"		30
W16	4				40
W18	5				50
W21	6	7/8"	3/8"		73
W24	7				85
W27	8				97
W30	8				97
W33	8				97
W36	10		1/2"	5/16"	140
W40	10				140
W44	10				140

NOTES:

1. ALL OTHER CONNECTIONS DEVIATING FROM TYPICAL CONNECTIONS SHALL BE DESIGNED AND DETAILED BY A PROFESSIONAL ENGINEER WORKING UNDER THE GUIDANCE OF THE CONTRACTOR. REF. GENERAL NOTES UNDER "STRUCTURAL STEEL CONNECTIONS."
2. NOTED REACTIONS ARE FOR SERVICE LOADS.
3. BOLTS ARE A325N WITH STANDARD HOLES.
4. SCHEDULED SHEAR PLATE CONNECTIONS APPLY TO RIGHT ANGLE CONNECTIONS AND SKEWED CONNECTIONS UP TO 30° FROM RIGHT ANGLE.
5. BEAM CONNECTIONS ARE "STANDARD" UNLESS OTHERWISE NOTED ON PLAN.
6. WORKLINES ARE ON CENTERLINES OF BEAMS AND COLUMNS, U.O.N.
7. WELD CAPACITY BASED ON Exx = 70 KSI.
8. CONTRACTOR RESPONSIBLE FOR MEETING ALL O.S.H.A. REQUIREMENTS.

F SINGLE PLATE CONNECTION SCHEDULE

2 TYPICAL DETAIL SCHEMATIC SINGLE-PLATE FRAMING CONNECTIONS

NO SCALE

TEXAS PARKS & WILDLIFE

FORD POWELL &CARSON
Architects & Planners, Inc.
Architecture
Planning
Preservation
Interior Design
1138 East Commerce Street
San Antonio, Texas 78205
210/226-1246
FPC# 92705

STATE OF TEXAS
KARINA TRIBBLE
109642
LICENSED PROFESSIONAL ENGINEER
7/3/20

aec Architectural Engineers Collaborative
Lamar Central
3800 N. Lamar Blvd.
Suite 330
Austin, Tx 78756
P 512.472.2111
www.aecollab.com
F-1985
FIRM REG #:
17007
AEC JOB#:

TYLER STATE PARK
HEADQUARTERS REPLACEMENT PHASE 1
PROJECT NUMBER: 112741

DATE: 07/03/2020
DESIGNED BY: Designer
DRAWN BY: EV
REVIEWED BY: KT

no.	revision	date

SHEET TITLE
STEEL TYPICAL DETAILS

SHEET NUMBER
S503

CONSTRUCTION DOCUMENTS

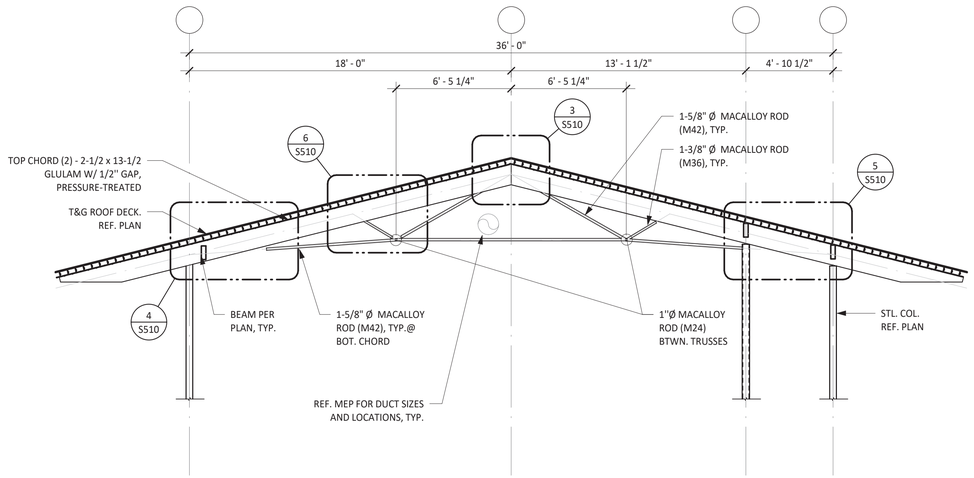

1 ELEVATION- ROOF TRUSS

SCALE: 1/4" = 1'-0"

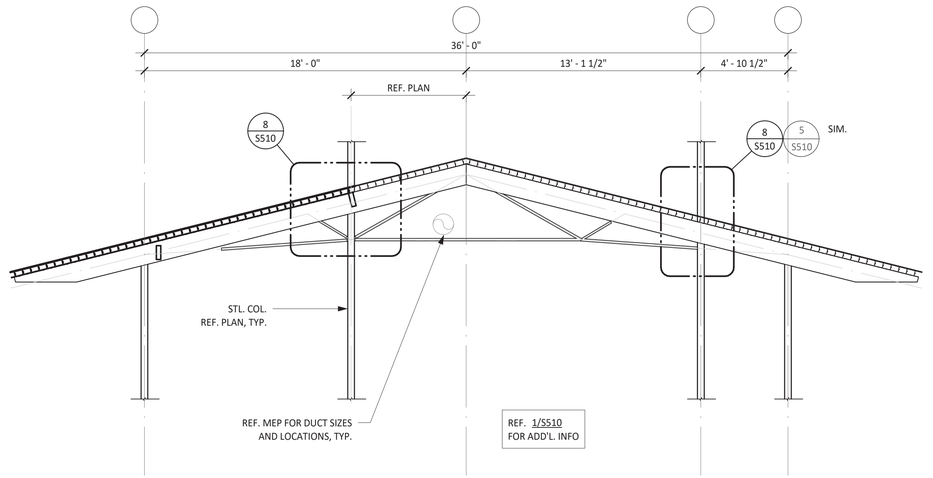

2 ELEVATION- ROOF TRUSS

SCALE: 1/4" = 1'-0"

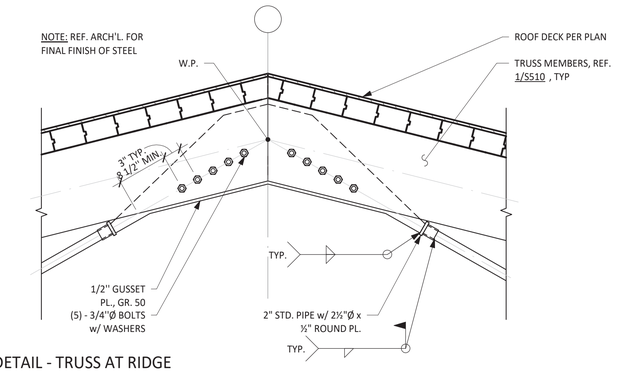

3 DETAIL - TRUSS AT RIDGE

SCALE: 1" = 1'-0"

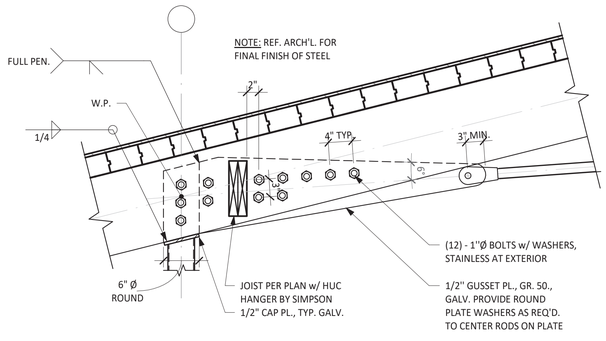

4 DETAIL - TRUSS AT COLUMN

SCALE: 1" = 1'-0"

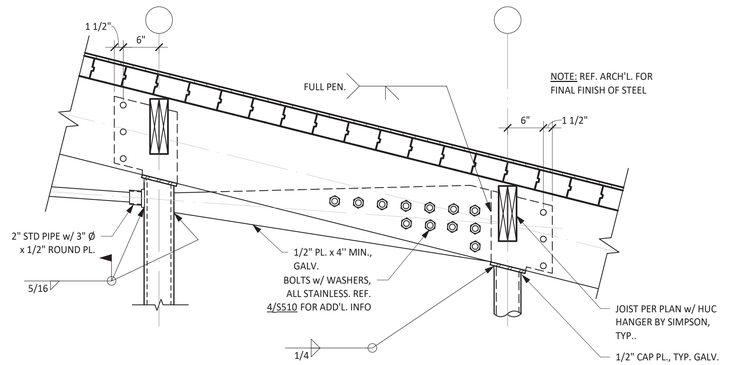

5 DETAIL - TRUSS END AT COLUMN

SCALE: 1" = 1'-0"

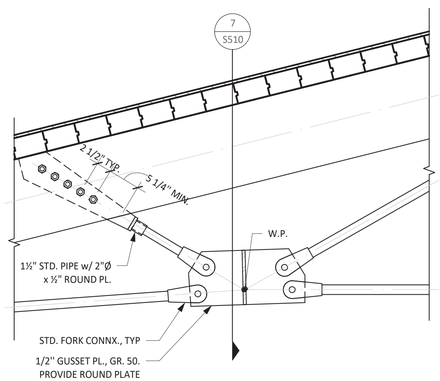

6 DETAIL - TRUSS BOTTOM CHORD

SCALE: 1" = 1'-0"

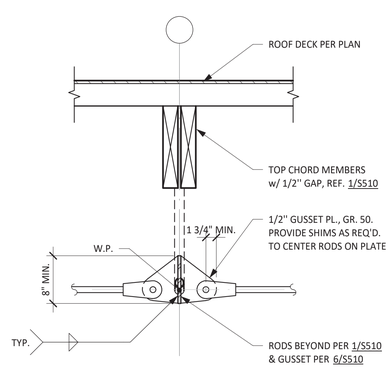

7 DETAIL - ROD BETWEEN TRUSSES

SCALE: 1" = 1'-0"

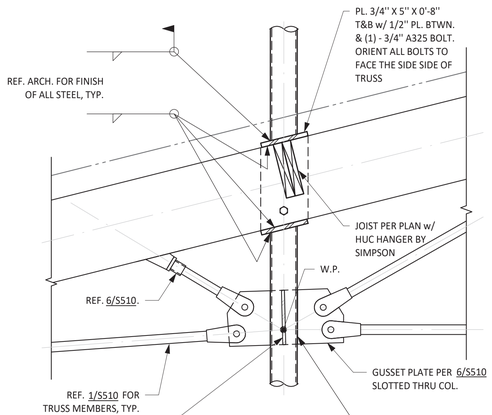

8 DETAIL - COLUMN THROUGH TRUSS

SCALE: 1" = 1'-0"

TEXAS PARKS & WILDLIFE

FORD POWELL &CARSON
Architects & Planners, Inc.
Architecture
Planning
Preservation
Interior Design
1138 East Commerce Street
San Antonio, Texas 78205
210/226-1246
FPC# 92705

STATE OF TEXAS
KARINA TRIBBLE
109642
LICENSED ARCHITECT
7/3/20

aec Architectural Engineers Collaborative
Lamar Central
3800 N. Lamar Blvd. Suite 330
Austin, Tx 78756
P 512.472.2111
www.aecollab.com
FIRM REG.#: F-1985
AEC JOB#: 17007

TYLER STATE PARK

HEADQUARTERS REPLACEMENT PHASE 1

PROJECT NUMBER: 112741

DATE: 07/03/2020
DESIGNED BY: KT
DRAWN BY: EV
REVIEWED BY: KT

no.	revision	date

SHEET TITLE
TRUSS DETAILS

SHEET NUMBER
S510

CONSTRUCTION DOCUMENTS

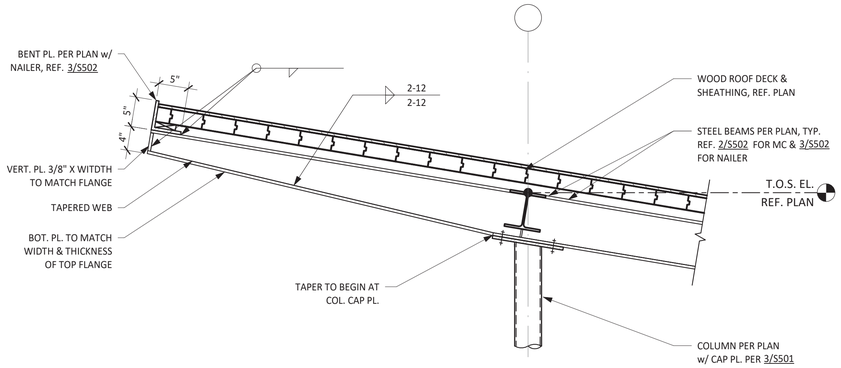

1 DETAIL - FRAMING AT CENTRAL HIGH ROOF

SCALE: 1" = 1'-0"

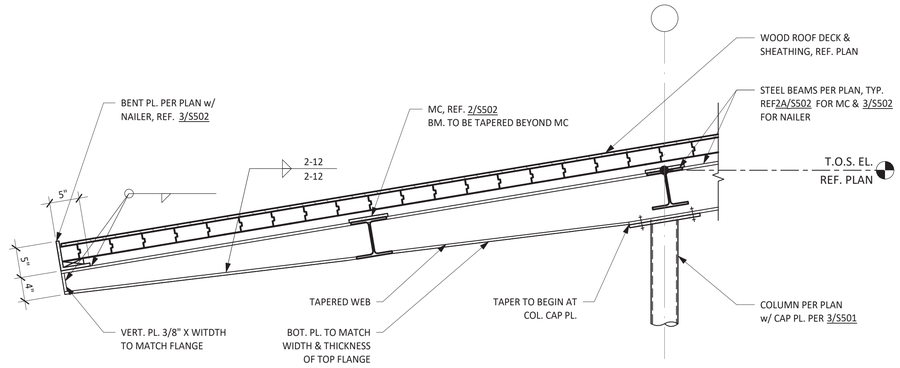

2 DETAIL - DOUBLE MC AND TAPER

SCALE: 1" = 1'-0"

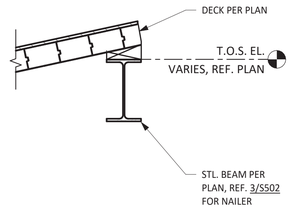

3 SECTION - DECK PERIMETER

SCALE: 1" = 1'-0"

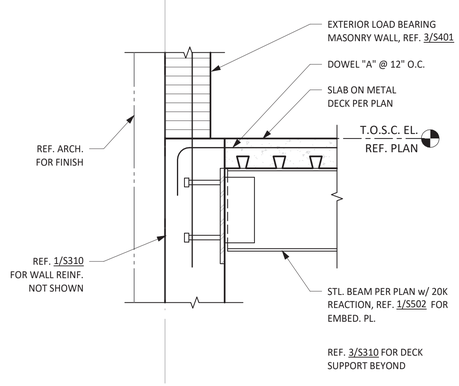

4 DETAIL - BEAM AT EXTERIOR WALL

SCALE: 1" = 1'-0"

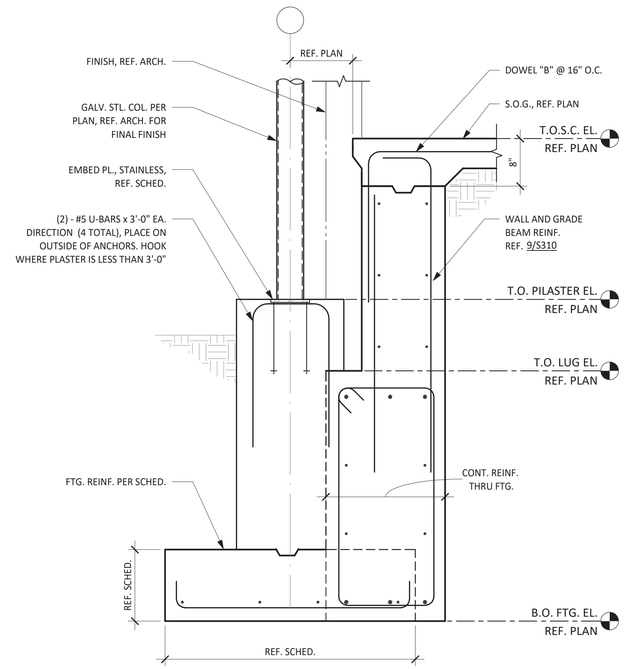

5 DETAIL - COLUMN AT FOOTING

SCALE: 1" = 1'-0"

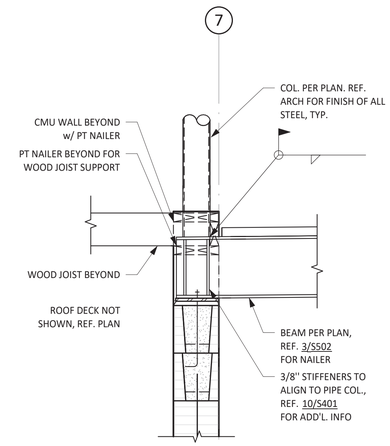

6 DETAIL - POST ON WALL

SCALE: 1" = 1'-0"

TEXAS PARKS & WILDLIFE

FORD POWELL &CARSON
Architects & Planners, Inc.
Architecture
Planning
Preservation
Interior Design
1138 East Commerce Street
San Antonio, Texas 78205
210/226-1246
FPC# 92705

STATE OF TEXAS
KARINA TRIBBLE
109642
LICENSED PROFESSIONAL ENGINEER
7/3/20

aec Architectural Engineers Architecture
Lamar Central
3800 N. Lamar Blvd.
Suite 330
Austin, Tx 78756
P 512.472.2111
www.aecollab.com
FIRM REG.#: F-1985
AEC JOB#: 17007

TYLER STATE PARK
HEADQUARTERS REPLACEMENT PHASE 1
PROJECT NUMBER: 112741

DATE: 07/03/2020
DESIGNED BY: KT
DRAWN BY: EV
REVIEWED BY: KT

no.	revision	date

SHEET TITLE
STEEL DETAILS

SHEET NUMBER
S511

CONSTRUCTION DOCUMENTS

NAILING SCHEDULE	
CONNECTION	NAILING
1. FLOOR JOIST TO BAND JOIST, FACE NAIL	3-16d
2. FLOOR JOIST TO SILL PLATE OR GIRDER, TOE NAIL	3-8d
3. BRIDGING TO JOISTS, TOE NAIL OR END NAIL EACH END	2-8d
4. SILL PLATE TO BAND JOIST OR BLOCKING, FACE NAIL	16d AT 16" O.C.
5. TOP PLATE TO STUD, END NAIL	2-16d
6. STUD TO SILL PLATE	4-8d TOE NAIL OR 2-16d EACH END
7. DOUBLE STUDS, FACE NAIL	16d AT 24" O.C. MAX.
8. DOUBLE TOP PLATES, FACE NAIL	16d AT 16" O.C.
9. TOP PLATES AND INTERSECTIONS, FACE NAIL	2-16d OR 3-10d
10. TOP PLATES AND LAPS, FACE NAIL	8-16d
11. CONTINUOUS HEADER-TWO PIECES	16d AT 16" O.C. ALONG EACH EDGE
12. CEILING JOISTS TO PLATE, TOE NAIL	3-8d
13. CEILING JOISTS, LAPS OVER PARTITIONS, FACE NAIL	3-16d
14. CEILING JOISTS TO PARALLEL RAFTERS, FACE NAIL	3-16d
15. RAFTER TO PLATE, TOE NAIL	3-8d
16. 3/4" LET-IN BRACE TO EACH STUD AND PLATES, FACE NAIL	2-8d
17. BUILT-UP CORNER STUDS	16d AT 24" O.C.
18. BUILT-UP GIRDER AND BEAMS, THREE MEMBERS	20d AT 32" O.C. AT TOP AND BOTTOM (STAGGERED) 2-20d AT ENDS

NOTES:
1. PROVIDE NAILING CONNECTIONS INDICATED IN SCHEDULE UNLESS DETAILED OR NOTED OTHERWISE.

1 TYPICAL WOOD DETAIL NAILING SCHEDULE
NO SCALE

WOOD CONSTRUCTION CONNECTOR NOTES:

1. ALL WOOD CONSTRUCTION CONNECTORS SHOWN ARE SIMPSON STRONG-TIE CONNECTORS MANUFACTURED BY SIMPSON STRONG-TIE COMPANY, INC. (OR APPROVED EQUIVALENT). BEFORE SUBSTITUTING ANOTHER BRAND, CONFIRM LOAD CAPACITY BASED ON RELIABLE PUBLISHED TESTING DATA OR CALCULATIONS AND SUBMIT TO ARCHITECTURAL ENGINEERS COLLABORATIVE.
2. ALL SPECIFIED FASTENERS SHALL BE INSTALLED ACCORDING TO THE DETAILS AND THE MANUFACTURER'S INSTRUCTIONS. ALL HOLES IN CONNECTORS SHALL BE PROPERLY NAILED TO THE WOOD STRUCTURE. CONTACT ARCHITECTURAL ENGINEERS COLLABORATIVE FOR FASTENERS NOT SHOWN. INCORRECT FASTENER QUANTITY, SIZE, TYPE, MATERIAL, OR FINISH MAY CAUSE THE CONNECTION TO FAIL.
3. BOLT HOLES SHALL BE A MINIMUM OF 1/32" AND A MAXIMUM OF 1/16" LARGER THAN THE BOLT DIAMETER.
4. INSTALL ALL SPECIFIED FASTENERS BEFORE LOADING THE CONNECTION.
5. USE PROPER SAFETY EQUIPMENT.
6. WELDING GALVANIZED STEEL MAY PRODUCE HARMFUL FUMES; FOLLOW PROPER WELDING PROCEDURES AND SAFETY PRECAUTIONS. WELDING SHOULD BE IN ACCORDANCE WITH AWS STANDARDS.
7. PNEUMATIC OR POWDER-ACTUATED FASTENERS MAY DEFLECT AND INJURE THE OPERATOR OR OTHERS. NAIL GUNS MAY BE USED TO INSTALL CONNECTORS, PROVIDED THE CORRECT QUANTITY AND TYPE OF NAILS ARE PROPERLY INSTALLED IN THE NAIL HOLES. GUNS WITH NAIL HOLE-LOCATING MECHANISMS SHOULD BE USED. FOLLOW THE MANUFACTURER'S INSTRUCTIONS AND USE THE APPROPRIATE SAFETY EQUIPMENT.
8. UNLESS OTHERWISE NOTED, BOLTS AND NAILS SHALL NOT BE COMBINED. SIMILARLY, WELDS SHALL NOT BE COMBINED WITH BOLTS OR NAILS.
9. 8d, 10d, 12d, 16d AND 20d SPECIFY COMMON NAILS AND MAY NOT BE REPLACED WITH BOX OR SINKER NAILS UNLESS OTHERWISE SPECIFIED.
10. BOLTS SHALL BE ASTM A307, GRADE A OR BETTER.
11. UNLESS OTHERWISE NOTED, BENDING STEEL IN THE FIELD MAY CAUSE FRACTURES AT THE BEND LINE. FRACTURED STEEL WILL NOT CARRY LOAD AND MUST BE REPLACED.
12. A FASTENER THAT SPLITS THE WOOD WILL NOT SUPPORT THE DESIGN LOAD. IF THE WOOD HAS A TENDENCY TO SPLIT, PRE-BORE HOLES TO 3/4 OF THE NAIL DIAMETER PER THE NDS.

2 TYPICAL WOOD DETAIL WOOD CONSTRUCTION CONNECTOR NOTES
NO SCALE

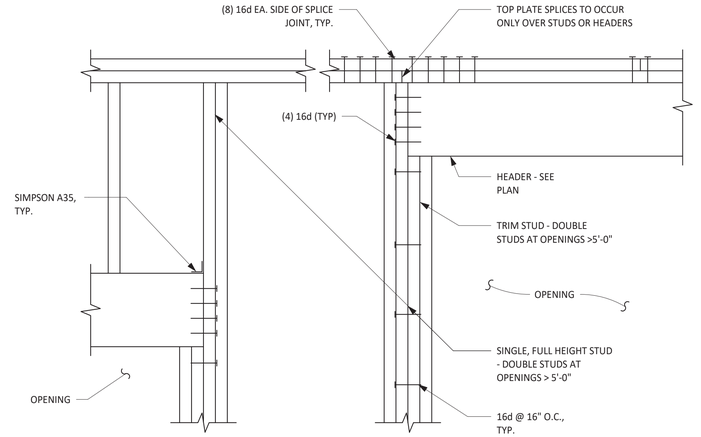

3 TYPICAL WOOD DETAIL WALL FRAMING AT OPENING
NO SCALE

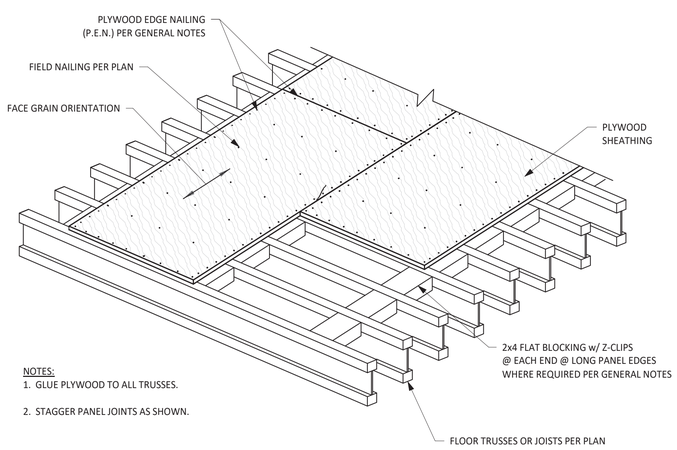

NOTES:
1. GLUE PLYWOOD TO ALL TRUSSES.
2. STAGGER PANEL JOINTS AS SHOWN.

4 TYPICAL WOOD DETAIL FLOOR DIAPHRAGM NAILING WITH BLOCKING
NO SCALE

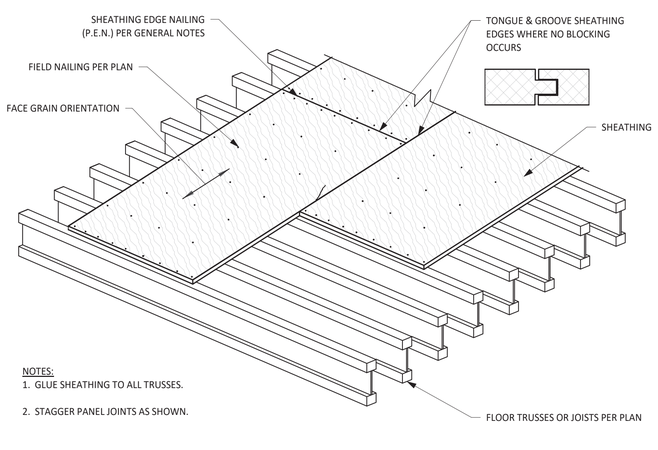

NOTES:
1. GLUE SHEATHING TO ALL TRUSSES.
2. STAGGER PANEL JOINTS AS SHOWN.

5 TYPICAL WOOD DETAIL FLOOR DIAPHRAGM NAILING WITHOUT BLOCKING
NO SCALE

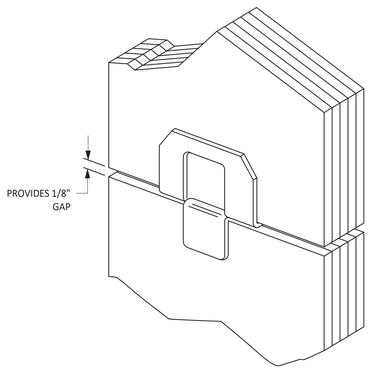

NOTES:
1. USE CLIPS FOR UNBLOCKED DIAPHRAGMS IF NO TONGUE AND GROOVE IN SHEATHING IS SPECIFIED.
2. INSTALL 2 EQUALLY SPACED BETWEEN TRUSSES

6 TYPICAL WOOD DETAIL SIMPSON STRONG-TIE PSCL
NO SCALE

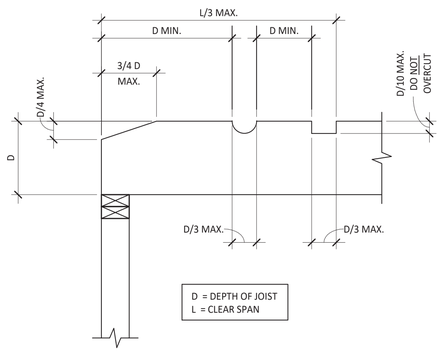

1. NOTCH CUTS ALLOWED IN TOP OF JOISTS ONLY. NOTIFY ENGINEER PRIOR TO CUTTING BEAMS, TYP. U.O.N.
2. THIS DETAIL DOES NOT APPLY TO ENGINEERED WOOD "I" JOISTS.

7 TYPICAL WOOD DETAIL NOTCHES IN WOOD
NO SCALE

TEXAS PARKS & WILDLIFE

FORD POWELL &CARSON
Architects & Planners, Inc.
Architecture
Planning
Preservation
Interior Design
1138 East Commerce Street
San Antonio, Texas 78205
210/226-1246
FPC# 92705

STATE OF TEXAS
KARINA TRIBBLE
109642
LICENSED PROFESSIONAL ENGINEER
7/3/20

Architectural Engineers Collaborative
Lamar Central
3800 N. Lamar Blvd.
Suite 330
Austin, Tx 78756
P 512.472.2111
www.aecollab.com
FIRM REG #: F-1985
AEC JOB#: 17007

TYLER STATE PARK
HEADQUARTERS REPLACEMENT PHASE 1
PROJECT NUMBER: 112741

DATE: 07/03/2020
DESIGNED BY: KT
DRAWN BY: EV
REVIEWED BY: KT

no.	revision	date

SHEET TITLE
WOOD TYPICAL DETAILS

SHEET NUMBER
S601

CONSTRUCTION DOCUMENTS

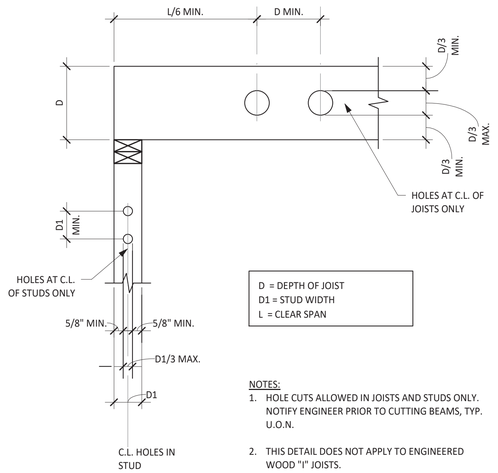

NOTES:

1. HOLE CUTS ALLOWED IN JOISTS AND STUDS ONLY. NOTIFY ENGINEER PRIOR TO CUTTING BEAMS, TYP. U.O.N.
2. THIS DETAIL DOES NOT APPLY TO ENGINEERED WOOD "I" JOISTS.

1 TYPICAL WOOD DETAIL HOLES IN WOOD

NO SCALE

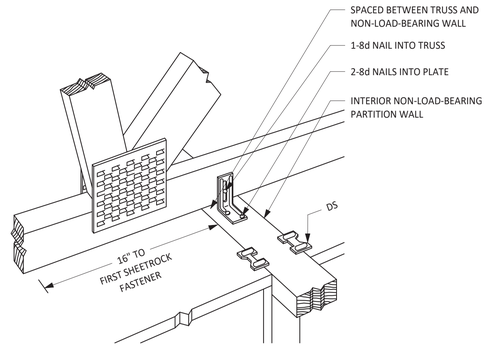

2 TYPICAL WOOD DETAIL SIMPSON STRONG-TIE STCT AT INTERIOR NON-LOAD-BEARING WALLS

NO SCALE

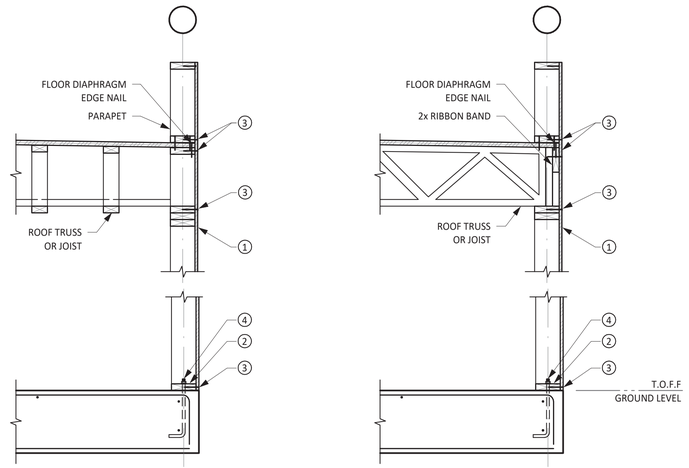

CONDITION B
TRUSSES PARALLEL TO EXTERIOR SHEAR WALL

CONDITION A
TRUSSES PERPENDICULAR TO EXTERIOR SHEAR WALL

SHEAR WALL SCHEDULE				
MARK	SHEATHING ①	WALL FRAMING ②	EDGE NAILING (P.E.N.) ③	ANCHOR BOLTS (A.B.) W/ WASHERS ④
A	1/2" APA RATED CDX	2x STUDS 2X MUDSILL	10d @ 6" O.C.	5/8"Ø x 12" @ 32" O.C.
B	1/2" APA RATED CDX	2x STUDS 2X MUDSILL	10d @ 4" O.C.	5/8"Ø x 12" @ 32" O.C.
C	1/2" APA RATED CDX	2x STUDS 2X MUDSILL	10d @ 3" O.C.	5/8"Ø x 12" @ 16" O.C.

NOTES:

1. PRIOR TO CONSTRUCTION OF SHEARWALLS, REVIEW LATEST DIMENSIONED ARCHITECTURAL DRAWINGS AND NOTIFY STRUCTURAL ENGINEER OF ANY LOCATIONS WHERE MINIMUM SHEARWALL LENGTHS ARE NOT MET. MINIMUM LENGTHS BASED ON OUT TO OUT FACE OF TIEDOWN POSTS.
2. ALL SHEAR WALL PANEL NAILS TO BE 10d COMMON 2-1/8" LENGTH SMOOTH SHANK PLYWOOD NAILS, TYP. U.O.N.
3. FIELD NAILING TO BE 10d @ 12" O.C. @ SHEARWALL PLYWOOD PANELS, TYP.
4. SEE PLANS FOR SHEARWALL TIE DOWNS, SIZES AND LOCATIONS.
5. PLACE SHEATHING ON SIDE OF WALL WHERE SHEARWALL SYMBOL OCCURS.
6. HORIZONTAL PLYWOOD SPLICES TO OCCUR AT RIBBON BAND. WHERE WALL HEIGHT DICTATES HORIZONTAL SPLICE AT WALL, PROVIDE 3x BLOCKING. DO NOT SPLICE AT DOUBLE 2x TOP PLATE.
7. USE 2x STUDS, DOUBLE TOP PLATE AND SOLE PLATE, U.N.O.
8. SEE DETAIL FOR TYPICAL SHEARWALL DETAIL AT INTERSECTING PARTITION WALL.
9. SHEATHING THICKNESS IS NOMINAL, ACTUAL THICKNESS EQUIVALENTS ARE 1/2"=15/32"; 5/8"=19/32"; 3/4"=23/32"
10. WALL SECTIONS ABOVE ARE DIAGRAMS, SEE DETAILS FOR INFO. NOT SHOWN.

3 TYPICAL DETAIL SHEARWALL SCHEDULE

NO SCALE

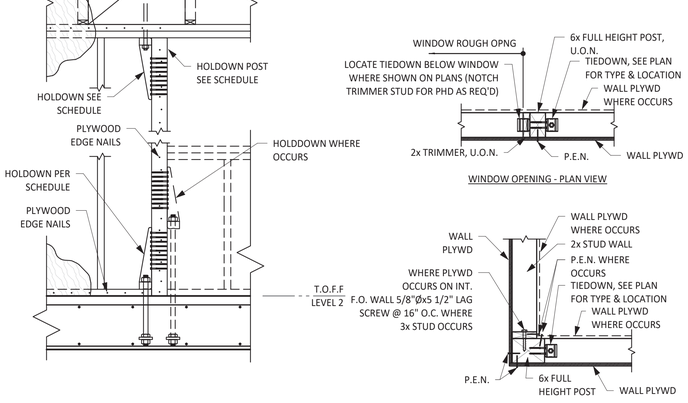

END OF SHEAR WALL - ELEVATION

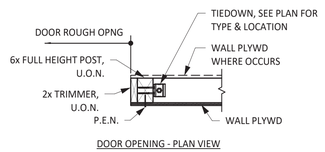

DOOR OPENING - PLAN VIEW

WINDOW OPENING - PLAN VIEW

OUTSIDE CORNER - PLAN VIEW

MARK	HOLDOWN TYPE	HOLDOWN ANCHOR BOLT	POST	CAPACITY (LBS)
T1	HDU2-SDS2.5	5/8"Ø THRD. ROD W/ 3"x3"x1/4" PL WASHER	FOR 2x4 WALL, 3x4 FOR 2x6 WALL, 3x6	3075
T2	HDU4-SDS2.5	5/8"Ø THRD. ROD W/ 3"x3"x1/4" PL WASHER	FOR 2x4 WALL, 4x4 FOR 2x6 WALL, 3x6	4565
T3	HDU5-SDS2.5	7/8"Ø THRD. ROD W/ 3"x3"x1/4" PL WASHER	FOR 2x4 WALL, 4x6 FOR 2x6 WALL, 4x6	5645
T4	HDU8-SDS2.5	7/8"Ø THRD. ROD W/ 3 1/2"x3 1/2"x1/4" PL WASHER	FOR 2x4 WALL, 4x6 FOR 2x6 WALL, 4x6	6970
T5	HDU11-SDS2.5	7/8"Ø THRD. ROD W/ 3"x3"x1/4" PL WASHER	FOR 2x4 WALL, 4x6 FOR 2x6 WALL, 6x6	9535

NOTE: SCHEDULED HOLDOWNS ARE PRE-DEFLECTED STEEL HOLDOWN ANCHORS BY "SIMPSON STRONG-TIE."

4 TYPICAL DETAIL SHEARWALL HOLDOWN SCHEDULE

NO SCALE

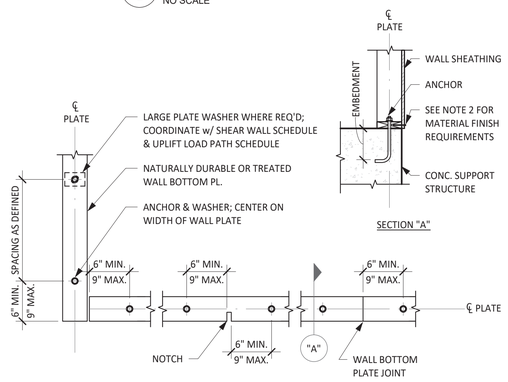

SECTION "A"

NOTES:

1. ANCHORS SHALL BE CAST-IN 5/8"Ø L-BOLTS @ 4'-0" ON CENTER MAXIMUM w/ 7" MINIMUM EMBEDMENT INTO CONCRETE EXCEPT AT SHEAR WALLS & WOOD WALLS w/ NET UPLIFT AT THE CONCRETE LEVEL. REFER TO THE SHEAR WALL SCHEDULE & UPLIFT LOAD PATH SCHEDULE FOR ANCHORAGE REQUIREMENTS AT SHEAR WALLS & WALLS w/ NET UPLIFT, RESPECTIVELY.
2. ANCHOR GRADE TO BE ASTM F1554 GRADE 36 UNLESS OTHERWISE NOTED. REFER TO THE GENERAL NOTES FOR INFORMATION REGARDING MATERIAL FINISH OF STEEL COMPONENTS IN CONTACT w/ TREATED WALL BOTTOM PLATE ON CONCRETE.
3. BOLTS SHOWN SHALL BE IN ADDITION TO ANY HOLD DOWN/CHORD ANCHORS FOR SHEAR WALLS.
4. PROVIDE MINIMUM OF (2) BOLTS PER PLATE SEGMENT.
5. USE STANDARD CUT WASHERS. LARGE PLATE WASHERS MAY BE REQUIRED AT SHEAR WALLS & WALLS w/ NET UPLIFT. REFER TO THE SHEAR WALL SCHEDULE & UPLIFT LOAD PATH SCHEDULE FOR PLATE WASHER REQUIREMENTS.
6. DO NOT OVERSIZE HOLES THRU FOUNDATION PLATE; HOLES SHALL BE 1/16" MAXIMUM LARGER THAN BOLT DIAMETER.
7. ALTERNATE ANCHORAGE OPTIONS PREFERRED BY THE CONTRACTOR SHALL BE REVIEWED AND APPROVED THE THE STRUCTURAL ENGINEER OF RECORD.

5 TYPICAL DETAIL WALL BOTTOM PLATE BOLT LAYOUT @ CONCRETE SUPPORT

NO SCALE

TEXAS PARKS & WILDLIFE

FORD POWELL &CARSON Architects & Planners, Inc.
Architecture
Planning
Preservation
Interior Design
1138 East Commerce Street
San Antonio, Texas 78205
210/226-1246
FPC# 92705

STATE OF TEXAS
KARINA TRIBBLE
109642
LICENSED PROFESSIONAL ENGINEER
7/3/20

aec Architectural Engineers Collaborative
Lamar Central
3800 N. Lamar Blvd.
Suite 330
Austin, Tx 78756
P 512.472.2111
www.aecollab.com
FIRM REG.#: F-13985
AEC JOB#: 17007

TYLER STATE PARK

HEADQUARTERS REPLACEMENT PHASE 1

PROJECT NUMBER: 112741

DATE: 07/03/2020
DESIGNED BY: KT
DRAWN BY: EV
REVIEWED BY: KT

no.	revision	date

SHEET TITLE

WOOD TYPICAL DETAILS

SHEET NUMBER

S602

CONSTRUCTION DOCUMENTS

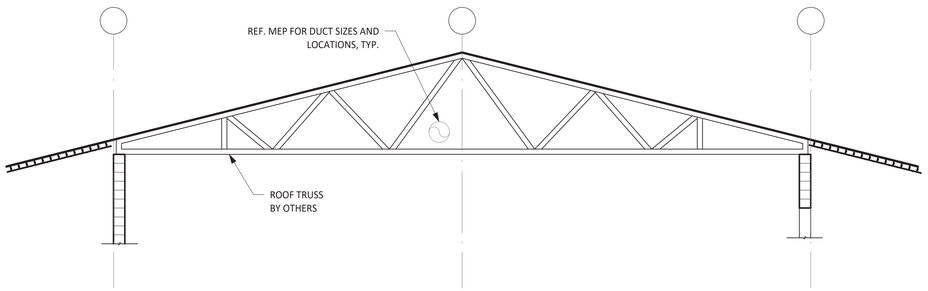

1 DETAIL - PRE-FAB ROOF TRUSS

SCALE: 1/4" = 1'-0"

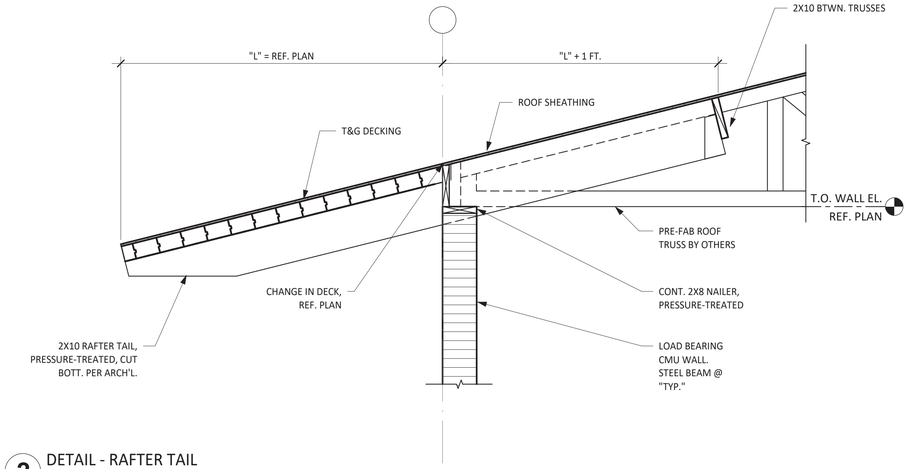

2 DETAIL - RAFTER TAIL

SCALE: 3/4" = 1'-0"

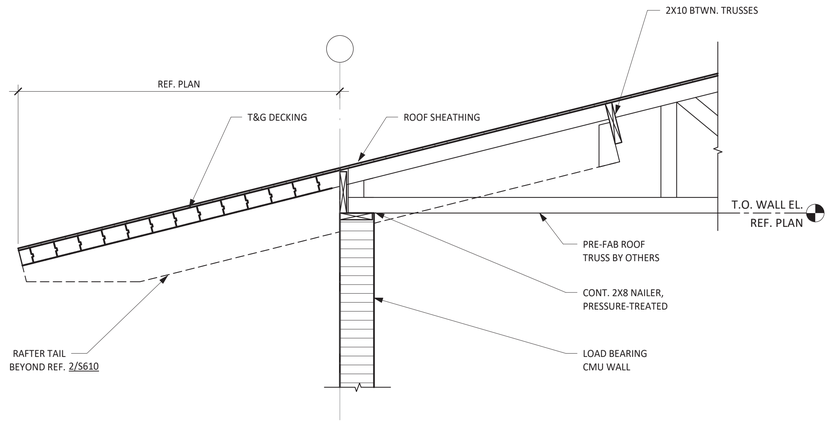

3 DETAIL - PRE-FAB ROOF TRUSS AT BEARING WALL

SCALE: 3/4" = 1'-0"

4 SECTION - CHANGE IN DECK AT CMU

SCALE: 1" = 1'-0"

TEXAS PARKS & WILDLIFE

FORD POWELL &CARSON
Architects & Planners, Inc.
Architecture
Planning
Preservation
Interior Design
1138 East Commerce Street
San Antonio, Texas 78205
210/226-1246
FPC# 92705

STATE OF TEXAS
KARINA TRIBBLE
109642
LICENSED PROFESSIONAL ENGINEER
7/3/20

aec Architectural Engineers Collaborative
Lamar Central
3800 N. Lamar Blvd.
Suite 330
Austin, Tx 78756
P 512.472.2111
www.aecollab.com
FIRM REG #: F-5985
AEC JOB#: 17007

TYLER STATE PARK

HEADQUARTERS REPLACEMENT PHASE 1

PROJECT NUMBER: 112741

DATE: 07/03/2020
DESIGNED BY: KT
DRAWN BY: EV
REVIEWED BY: KT

no.	revision	date

SHEET TITLE

WOOD DETAILS

SHEET NUMBER

S610

CONSTRUCTION DOCUMENTS

MECHANICAL SYMBOLS AND ABBREVIATIONS

PIPING SYMBOLS

CD	CONDENSATE DRAIN
RS/RL	REFRIGERANT LINES

DUCTWORK SYMBOLS

12"x20"	DUCT SIZE, FIRST FIGURE IS SIDE SHOWN
	DUCT SECTION, SUPPLY AIR: UP, DOWN
	DUCT SECTION, RETURN AIR OR EXHAUST: UP, DOWN
	DUCT SECTION, OUTSIDE AIR: UP, DOWN
O.S. DN	CHANGE OF ELEVATION, OFFSET, UP OR DOWN (DN)
AD	ACCESS DOORS, VERTICAL OR HORIZONTAL
	FLEXIBLE CONNECTION
	FLEXIBLE DUCT
	TRANSITION
	HIGH EFFICIENCY TAKE-OFF WITH DAMPER, WITHOUT DAMPER
OR	TURNING VANES
	MANUAL VOLUME DAMPER
	ROTOTWIST DAMPER
FD	FIRE DAMPER, VERTICAL
FD	FIRE DAMPER, HORIZONTAL
FSD	FIRE SMOKE DAMPER, VERTICAL
FSD	FIRE SMOKE DAMPER, HORIZONTAL
	OFFSET
	MANUAL SPLITTER
	STANDARD BRANCH, SUPPLY OR RETURN, NO SPLITTER
	TEE WITH SPLITTER DAMPER & PULLROD
A 100	SIDEWALL GRILL OR REGISTER (TYPE INDICATED)
A 100	CEILING GRILL OR REGISTER (TYPE INDICATED)
K 2000	LOUVER (TYPE INDICATED)
A 100 (TYP. 2)	GRILLE IDENTIFICATION: A = MARK; 100 = AIR QUANTITY (CFM); (TYP. 2) = GRILLE QUANTITY

MECHANICAL SYMBOLS

	ANGLE VALVE
	BALL VALVE
	BALANCING VALVE (AS SPECIFIED)
	BUTTERFLY VALVE
	CHECK VALVE (AS SPECIFIED)
	GATE VALVE
	OSSY VALVE WITH TAMPER SWITCH
	GLOBE VALVE
	PRESSURE REDUCING VALVE
	PRESSURE RELIEF VALVE
	SHUT OFF VALVE (AS SPECIFIED)
	THREE WAY VALVE
G	GEAR (MANUAL)
	LEVER (MANUAL)
	STEM (MANUAL)
S	SOLENOID (ELECTRIC ACTUATOR)
M	MOTOR (ELECTRIC ACTUATOR)
M	MOTOR (PNEUMATIC ACTUATOR)
D	DIAPHRAGM (PNEUMATIC ACTUATOR)
	FLANGED FITTING
	SCREWED FITTING
	WELDED FITTING
	CAP
R	PITCH OF PIPE, RISE (R) DROP (D)
	TURNED UP ELBOW
	TURNED DOWN ELBOW
	CONCENTRIC REDUCER
	ECCENTRIC STRAIGHT CROWN REDUCER
	ECCENTRIC STRAIGHT INVERT REDUCER
	CROSS
	TEE
	OUTLET DOWN TEE
	OUTLET UP TEE
	SCREWED UNION
	FLANGED UNION
	STRAINER W/ BLOW OFF

MECHANICAL SYMBOLS (CONT.)

AV	AUTOMATIC AIR VENT
MV	MANUAL AIR VENT
CWP-1	PUMP (INDICATE USE)
	ALIGNMENT GUIDE
	ANCHOR
	BALL JOINT
EJ-1	EXPANSION JOINT
	EXPANSION LOOP
	FLEXIBLE CONNECTOR
FD	DRAIN (TYPE NOTED)

CONTROLS

T H	ROOM THERMOSTAT: TEMPERATURE, HUMIDITY
T H	ROOM SENSOR: TEMPERATURE, HUMIDITY
T	REMOTE BULB THERMOSTAT
T	DUCT OR PIPE THERMOSTAT (PROVIDE 12" MIN. LENGTH IN DUCT WHEN SPACE PERMITS)
T	DUCT THERMOSTAT WITH AVERAGING ELEMENT
T	DUCT OR PIPE TEMP. SENSOR (PROVIDE 12" MIN. LENGTH IN DUCT WHEN SPACE PERMITS)
H	DUCT HUMIDITY SENSOR
DP	DUCT DEWPOINT SENSOR
SP	DUCT STATIC PRESSURE SENSOR
T	DUCT TEMP. SENSOR WITH AVERAGING ELEMENT
RS	REFRIGERANT SENSOR
FS	FLOW SWITCH
P	PRESSURE SWITCH
SC	VARIABLE SPEED MOTOR CONTROLLER

DRAWING SYMBOLS

RE: #2/M1	REFER TO DETAIL 2, SHT. M-1
1 / M3	SECTION REFERENCE
AHU-12	EQUIPMENT MARK

NOTE: NOT ALL SYMBOLS OR ABBREVIATIONS MAY BE USED.

GENERAL MECHANICAL NEW WORK NOTES

1. ALL WORK SHALL BE IN ACCORDANCE WITH THE INTERNATIONAL BUILDING CODE,THE INTERNATIONAL MECHANICAL CODE, AND THE OTHER CODES AND ORDINANCES OF THE AUTHORITY HAVING JURISDICTION.
2. NEW DUCT DIMENSIONS INDICATED ARE INSIDE CLEAR DIMENSIONS.
3. ALL NEW RECTANGULAR SUPPLY AND RETURN DUCTS SHALL HAVE TURNING VANES AT EACH 90 DEGREE ELBOW OR TEE.
4. ALL NEW DUCT SHALL BE SHEETMETAL AND SHALL BE INSTALLED WITH INSULATION AS SPECIFIED.
5. ALL NEW DUCTWORK SHALL BE FABRICATED AND INSTALLED AS PER ASHRAE AND SMACNA STANDARDS.
6. MOUNT ALL NEW THERMOSTATS/SENSORS AT 3'-8" A.F.F. IN ACCORDANCE WITH T.A.S. REQUIREMENTS.
7. PROVIDE AND INSTALL A SPIN-IN TYPE TAKE-OFF W/ VOLUME CONTROL DAMPER ON EACH ROUND SUPPLY BRANCH DUCT SERVING A SUPPLY DIFFUSER/REGISTER.
8. COORDINATE ALL NEW DUCTWORK, GRILLES, AND EQUIPMENT WITH ALL TRADES BEFORE INSTALLING.
9. TRANSITION NEW SUPPLY, RETURN AND EXHAUST DUCTS FROM UNIT CONNECTION SIZE TO DUCT SIZE SHOWN.
10. PROVIDE AND INSTALL VIBRATION ISOLATORS ON ANY NEW EQUIPMENT WITH MOVING PARTS.
11. DUCT SMOKE DETECTORS TO BE PROVIDED AND INSTALLED BY THE FIRE ALARM SYSTEMS INSTALLER. COORDINATE WITH MECHANICAL CONTRACTOR. INSTALL DETECTOR IN RETURN DUCT NEAR UNIT CONNECTION. THE MECHANICAL CONTRACTOR SHALL BE RESPONSIBLE FOR WIRING BETWEEN THE FIRE ALARM LOW VOLTAGE RELAY AND THE HVAC CONTROL EQUIPMENT.
12. ALL NEW UNITS MUST BE INSTALLED LEVEL.
13. PROVIDE CANVAS CONNECTION AT NEW UN-ISOLATED FAN DUCT CONNECTIONS.
14. COORDINATE LOCATIONS OF NEW MECHANICAL EQUIPMENT WITH GENERAL CONTRACTOR AND STRUCTURE, TYPICAL. WHERE SIGNIFICANT CHANGES ARE REQUIRED, THE CONTRACTOR SHALL PRESENT POTENTIAL MODIFICATIONS TO, AND OBTAIN APPROVAL FROM THE ENGINEER PRIOR TO PROCEEDING WITH SAID WORK.
15. CAREFULLY PROTECT ALL EQUIPMENT AND MATERIAL PRIOR TO INSTALLATION.
16. ALL NEW CONDENSATE DRAIN PIPING SHALL BE TYPE L COPPER. GRADE PIPING AT 1/8" PER FOOT. (MIN.).
17. PROVIDE MANUFACTURER'S RECOMMENDED CLEARANCES FOR ALL NEW MECHANICAL EQUIPMENT. COORDINATE CLEARANCE SPACE WITH SPRINKLER PIPING, CONDUITS, DUCTWORK AND LIGHTING FIXTURES TO ALLOW PROPER SERVICE ACCESS FOR FILTER REPLACMENTS AND EQUIPMENT MAINTENANCE.
18. SIZE AND ROUTE NEW REFRIGERANT PIPING PER EQUIPMENT MANUFACTURER'S RECOMMENDATIONS.
19. ALL MATERIALS LOCATED WITHIN RETURN AIR PLENUM SHALL COMPLY WITH SECTION 602 OF THE 2015 INTERNATIONAL MECHANICAL CODE.
20. PROVIDE BALANCING DAMPER AT EACH BRANCH OF SPLITTER TEE FITTING.
21. PROVIDE BELLMOUTH FITTING AT VAV TERMINAL UNIT INLET BRANCH CONNECTION TO RECTANGULAR SUPPLY DUCT MAIN.
22. PROVIDE TAPERED 45 DEGREE FITTING AT RECTANGULAR SUPPLY DUCT BRANCH CONNECTION TO RECTANGULAR SUPPLY DUCT MAIN.
23. INTERNALLY LINE TRANSFER AIR DUCTWORK.
24. INTERNALLY LINE RETURN AIR DUCTWORK.

TEXAS PARKS & WILDLIFE

FORD POWELL &CARSON
Architects & Planners, Inc.
Architecture
Planning
Preservation
Interior Design
1138 East Commerce Street
San Antonio, Texas 78205
210/226-1246
FPC# 92705

STATE OF TEXAS
MATTHEW E. BYNUM
122100
LICENSED
PROFESSIONAL ENGINEER
7-3-20
Alderson & Associates, Inc.
F-1008

ALDERSON & ASSOCIATES, INC. MEP ENGINEERING | COMMISSIONING
7700 Torino St, Suite 101
San Antonio, TX 78223
Telephone: 210.614.1110
PROJECT # 17012

© 2020 Alderson & Associates, Inc. F-1008

TYLER STATE PARK
HEADQUARTERS REPLACEMENT PHASE 1
PROJECT NUMBER: 112741

DATE: 07/03/2020
DESIGNED BY: MMK
DRAWN BY: MMK
REVIEWED BY: MEB

no.	revision	date

SHEET TITLE
MECHANICAL SYMBOLS & ABBREVIATIONS

SHEET NUMBER
M001

CONSTRUCTION DOCUMENTS

PATH: BIM 360://17-012 Tyler State Park Visitor Center Replacement/17012 Tyler – M19.rvt
DATE: 7/2/2020 3:59:01 PM

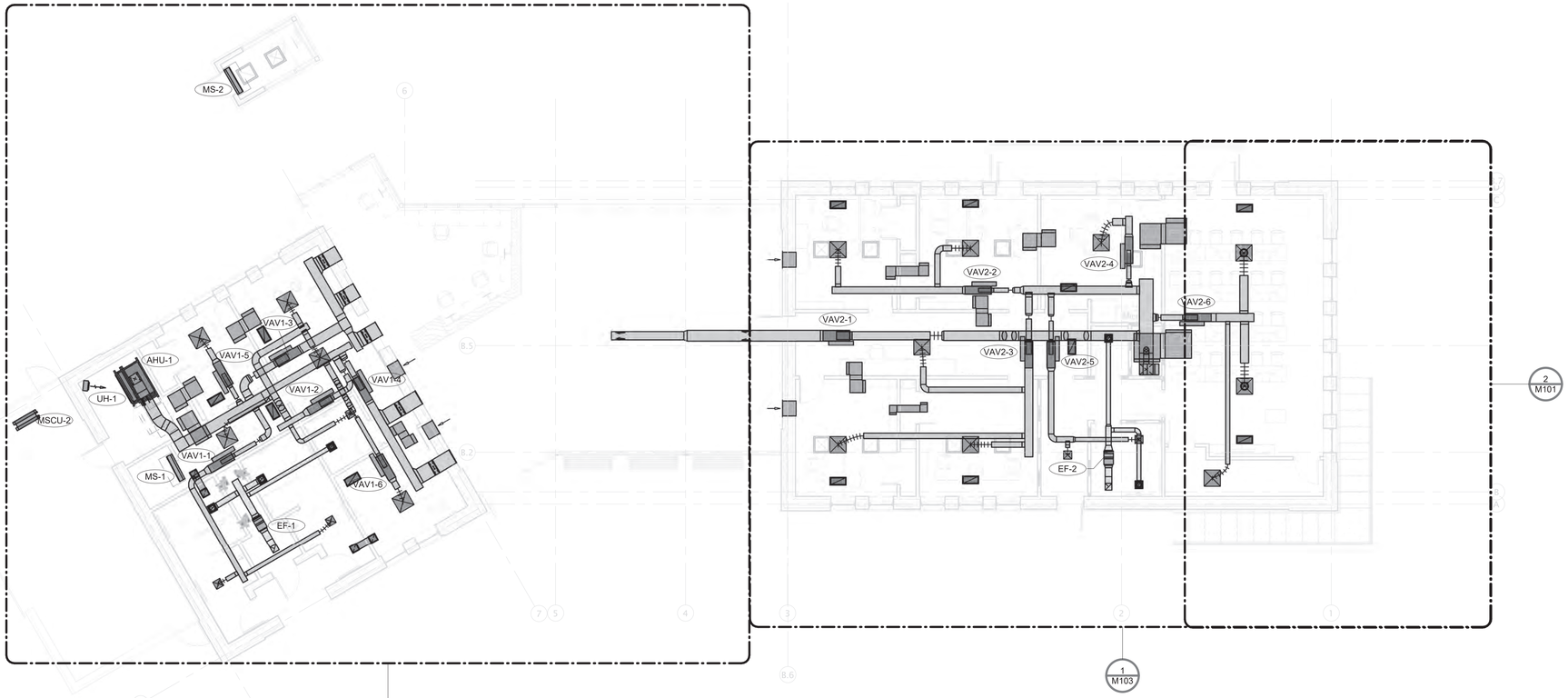

1 MECHANICAL FLOOR PLAN - 1ST FLOOR

SCALE: 1/8" = 1'-0"

TRUE NORTH

KEYED NOTES (THIS SHEET ONLY)

1. 8" DUCT ROUTED IN CHASE FROM LEVEL ABOVE. RE:#1/M103 FOR CONTINUATION.
2. EXPOSED DUCTWORK SHALL BE DOUBLE WALL SPIRAL WITH PAINT-GRIP FINISH. COORDINATE DUCT ROUTING WITH STRUCTURAL ELEMENTS. RE: STRUCTURAL DRAWINGS.
3. MAINTAIN UNOBSTRUCTED ACCESS DOOR SWING AND LOWER PANEL REMOVAL FOR SERVICING INTERNAL PARTS. PROVIDE 12"x12" ACCESS DOOR IN STRAIGHT DUCTWORK JUST DOWNSTREAM OF THE ELECTRIC HEATING COIL FOR CLEANING. COORDINATE EXACT TERMINAL UNIT LOCATION WITH STRUCTURE, DUCTWORK, AND LIGHTING. CONTROL PANEL CLEARANCES SHALL BE MAINTAINED. PROVIDE ANY ADDITIONAL 2"x2"x1/4" STEEL ANGLES SECURED TO STRUCTURE AS REQUIRED TO SUSPEND UNIT.
4. LOCATE AIR HANDLING UNIT ON EQUIPMENT SUPPORTS. RE: SCHEDULE FOR REQUIREMENTS.
5. SUSPEND UNIT HEATER FROM STRUCTURE. LOCATE BOTTOM OF UNIT HEATER AT 8'-6" A.F.F.
6. 24"x14" LOUVER ON DOOR FOR OUTSIDE AIR INTAKE SERVING AIR HANDLER. RE: ARCHITECTURAL DRAWINGS FOR DOOR TYPE.
7. CENTRAL CONTROLLER FOR HVAC SYSTEM. FIELD COORDINATE EXACT LOCATION.
8. LOCATE CONDENSING UNIT ON EQUIPMENT SUPPORTS. RE: SCHEDULE FOR REQUIREMENTS.
9. ROUTE 3/4" INSULATED CONDENSATE DRAIN TO HUB DRAIN. FIELD COORDINATE EXACT CONDENSATE DRAIN ROUTING. RE: PLUMBING DRAWINGS FOR HUB DRAIN LOCATION.
10. SIZE AND ROUTE REFRIGERANT PIPING PER MANUFACTURER'S RECOMMENDATION. COORDINATE EXTERIOR WALL PENETRATION WITH STRUCTURE.
11. RE: #1/M103 FOR PIPING CONTINUATION.
12. ROUTE REFRIGERANT PIPING TIGHT TO STRUCTURE.
13. LINED RETURN AIR TRANSFER DUCT. LOCATE AS HIGH AS POSSIBLE. COORDINATE LOCATION WITH ALL OTHER TRADES.
14. 16"x20" DUCT ROUTED IN CHASE TO LEVEL ABOVE. RE: #1/M103 FOR CONTINUATION.
15. RETURN AIR OPENING OPEN TO SPACE.
16. PROVIDE ONE-HOUR RATED FIRE DAMPER IN DUCT WORK. PROVIDE ACCESS PANEL IN DUCT AND CEILING. RE:#5/M302 FOR INSTALLATION. PROVIDE ACCESS PANEL IN DUCT AND IN CEILING.

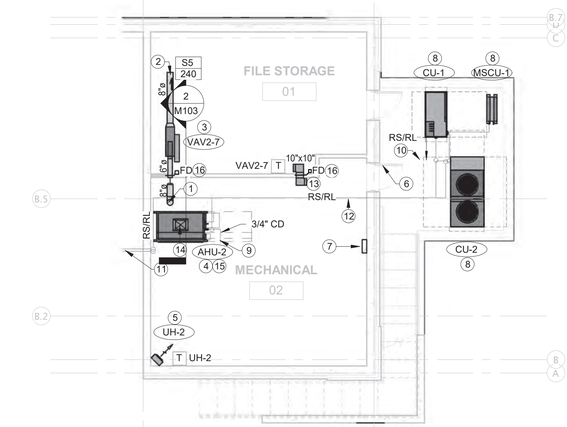

2 MECHANICAL FLOOR PLAN - BASEMENT

SCALE: 1/8" = 1'-0"

TRUE NORTH

TEXAS PARKS & WILDLIFE

FORD POWELL &CARSON
Architects & Planners, Inc.
Architecture
Planning
Preservation
Interior Design
1138 East Commerce Street
San Antonio, Texas 78205
210/226-1246
FPC# 92705

STATE OF TEXAS
MATTHEW E. BYNUM
122100
LICENSED
PROFESSIONAL ENGINEER
7-3-20
Alderson & Associates, Inc.
F-1008

ALDERSON & ASSOCIATES, INC.
MEP ENGINEERING | COMMISSIONING
7700 Torino St. Suite 101
San Antonio, TX 78229
Telephone: 210.614.1110
© 2020 Alderson & Associates, Inc. F-1008
PROJECT # 17012

TYLER STATE PARK
HEADQUARTERS REPLACEMENT PHASE 1
PROJECT NUMBER: 112741

DATE: 07/03/2020
DESIGNED BY: MMK
DRAWN BY: MMK
REVIEWED BY: MEB

no.	revision	date

SHEET TITLE
MECHANICAL FLOOR PLANS

SHEET NUMBER
M101

CONSTRUCTION DOCUMENTS

PATH: BIM 360://17-012 Tyler State Park Visitor Center Replacement/17012 Tyler – M19.rvt
DATE: 7/2/2020 3:59:04 PM

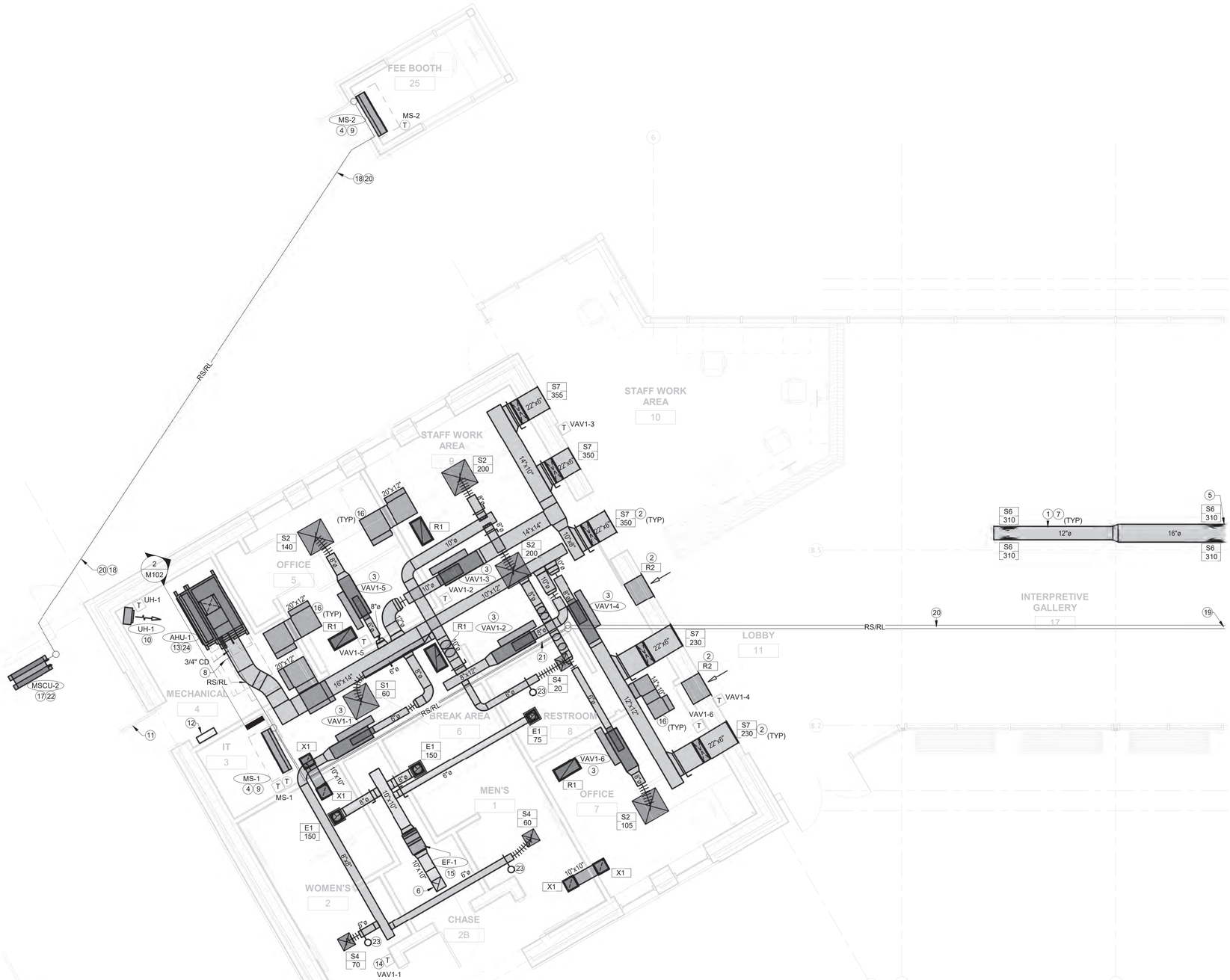

KEYED NOTES (THIS SHEET ONLY)

1. LOCATE BOTTOM OF DUCT AT 11'-6" A.F.F. ROUTE DUCT IN BETWEEN STRUCTURAL JOISTS.
2. LOCATE CENTER OF AIR DEVICE AT 10'-0" A.F.F.
3. MAINTAIN UNOBSTRUCTED ACCESS DOOR SWING AND LOWER PANEL REMOVAL FOR SERVICING INTERNAL PARTS. PROVIDE 12"x12" ACCESS DOOR IN STRAIGHT DUCTWORK JUST DOWNSTREAM OF THE ELECTRIC HEATING COIL FOR CLEANING. COORDINATE EXACT TERMINAL UNIT LOCATION WITH STRUCTURE, DUCTWORK, AND LIGHTING. CONTROL PANEL CLEARANCES SHALL BE MAINTAINED. PROVIDE ANY ADDITIONAL 2"x2"x1/4" STEEL ANGLES SECURED TO STRUCTURE AS REQUIRED TO SUSPEND UNIT.
4. LOCATE MINISPLIT ABOVE DOOR AS HIGH AS POSSIBLE.
5. RE: #1/M103 FOR DUCT CONTINUATION.
6. 10"x10" DUCT UP THROUGH ROOF. COORDINATE PENETRATION WITH STRUCTURE. PROVIDE WITH ROOF CAP EQUAL TO COOK M#PR-12 OR APPROVED EQUAL WITH INSECT SCREEN.
7. EXPOSED DUCTWORK SHALL BE DOUBLE WALL SPIRAL WITH PAINT-GRIP FINISH. COORDINATE DUCT ROUTING WITH STRUCTURAL ELEMENTS. RE: STRUCTURAL DRAWINGS.
8. ROUTE 3/4" CONDENSATE DRAIN TO NEAREST FLOOR SINK IN ROOM. FIELD COORDINATE CONDENSATE DRAIN ROUTING. RE: PLUMBING DRAWINGS FOR FLOOR DRAIN LOCATION.
9. MINISPLIT CONDENSATE PIPING ROUTED TO IN-WALL DRAIN BOX. RE: PLUMBING DRAWINGS FOR EXACT LOCATION.
10. SUSPEND UNIT HEATER FROM STRUCTURE. LOCATE BOTTOM OF UNIT HEATER AT 8'-6" A.F.F.
11. 24"x14" LOUVER ON DOOR FOR OUTSIDE AIR INTAKE SERVING AIR HANDLER. RE: ARCHITECTURAL DRAWINGS FOR DOOR TYPE.
12. CENTRAL CONTROLLER FOR HVAC SYSTEM. FIELD COORDINATE EXACT LOCATION.
13. LOCATE AIR HANDLING UNIT ON EQUIPMENT SUPPORTS. RE: SCHEDULE FOR REQUIREMENTS.
14. PROVIDE LOCKABLE BOX OVER ADJUSTABLE TEMPERATURE SENSOR.
15. SUSPEND EXHAUST FAN FROM STRUCTURE. LOCATE BOTTOM OF EXHAUST FAN AT 10'-3" A.F.F.
16. LINED RETURN AIR TRANSFER DUCT. LOCATE AS HIGH AS POSSIBLE. COORDINATE LOCATION WITH ALL OTHER TRADES.
17. LOCATE CONDENSING UNIT ON EQUIPMENT SUPPORTS. RE: SCHEDULE FOR REQUIREMENTS.
18. SIZE AND ROUTE REFRIGERANT PIPING PER MANUFACTURER'S RECOMMENDATION. COORDINATE EXTERIOR WALL PENETRATION WITH STRUCTURE.
19. RE: #1/M103 FOR PIPING CONTINUATION.
20. ROUTE REFRIGERANT PIPING UNDERGROUND.
21. ROUTE REFRIGERANT PIPING TIGHT TO STRUCTURE.
22. LOCATE MINISPLIT CONDENSING UNIT IN MECHANICAL YARD. FIELD COORDINATE FINAL LOCATION. ENSURE MANUFACTURER-RECOMMENDED CLEARANCES ARE MET.
23. PROVIDE REMOTE CABLE ACTUATED DAMPER EQUAL TO ROTOTWIST. DAMPER SHALL BE OPERABLE FROM AIR DEVICE FACE.
24. RETURN AIR OPENING OPEN TO SPACE.

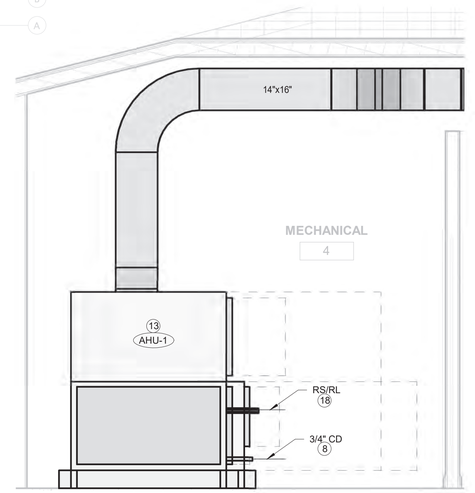

1 MECHANICAL ENLARGED FLOOR PLAN - AREA A
SCALE: 1/4" = 1'-0"

2 AHU-1 SECTION
SCALE: 1/2" = 1'-0"

TEXAS PARKS & WILDLIFE

FORD POWELL & CARSON
Architects & Planners, Inc.
Architecture
Planning
Preservation
Interior Design
1138 East Commerce Street
San Antonio, Texas 78205
210/226-1246
FPC# 92705

STATE OF TEXAS
MATTHEW E. BYNUM
122100
LICENSED
PROFESSIONAL ENGINEER
7-3-20
Alderson & Associates, Inc.
F-1008

ALDERSON & ASSOCIATES, INC.
MEP ENGINEERING | COMMISSIONING
7700 Torino St, Suite 101
San Antonio, TX 78229
Telephone: 210.614.1110
© 2020 Alderson & Associates, Inc. F-1008
PROJECT # 17012

TYLER STATE PARK
HEADQUARTERS REPLACEMENT PHASE 1
PROJECT NUMBER: 112741

DATE: 07/03/2020
DESIGNED BY: MMK
DRAWN BY: MMK
REVIEWED BY: MEB

no.	revision	date

SHEET TITLE
MECHANICAL ENLARGED FLOOR PLAN - AREA A

SHEET NUMBER
M102

CONSTRUCTION DOCUMENTS

PATH: BIM 360://17-012 Tyler State Park Visitor Center Replacement/17012 Tyler - M13.rvt
DATE: 7/2/2020 3:59:08 PM

KEYED NOTES (THIS SHEET ONLY)

1. EXPOSED DUCTWORK SHALL BE DOUBLE WALL SPIRAL WITH PAINT-GRIP FINISH. COORDINATE DUCT ROUTING WITH STRUCTURAL ELEMENTS. RE: STRUCTURAL DRAWINGS.
2. LOCATE BOTTOM OF DUCT AT 11'-6" A.F.F. ROUTE DUCT IN BETWEEN STRUCTURAL JOISTS.
3. MAINTAIN UNOBSTRUCTED ACCESS DOOR SWING AND LOWER PANEL REMOVAL FOR SERVICING INTERNAL PARTS. PROVIDE 12"x12" ACCESS DOOR IN STRAIGHT DUCTWORK JUST DOWNSTREAM OF THE ELECTRIC HEATING COIL FOR CLEANING. COORDINATE EXACT TERMINAL UNIT LOCATION WITH STRUCTURE, DUCTWORK, AND LIGHTING. CONTROL PANEL CLEARANCES SHALL BE MAINTAINED. PROVIDE ANY ADDITIONAL 2"x2"x1/4" STEEL ANGLES SECURED TO STRUCTURE AS REQUIRED TO SUSPEND UNIT.
4. 8" DUCT ROUTED IN CHASE TO LEVEL BELOW. RE: #2/M101 FOR DUCT CONTINUATION.
5. 10"x10" DUCT UP THROUGH ROOF. COORDINATE PENETRATION WITH STRUCTURE. PROVIDE WITH ROOF CAP EQUAL TO COOK M#PR-12 OR APPROVED EQUAL WITH INSECT SCREEN.
6. RE: #1/M102 FOR DUCT CONTINUATION.
7. LOCATE CENTER OF AIR DEVICE AT 10'-0" A.F.F.
8. LINED RETURN AIR TRANSFER DUCT. LOCATE AS HIGH AS POSSIBLE. COORDINATE LOCATION WITH ALL OTHER TRADES.
9. RE: #2/M101 FOR PIPING CONTINUATION.
10. ROUTE REFRIGERANT PIPING UNDERGROUND.
11. RE: #1/M102 FOR PIPING CONTINUATION.
12. PROVIDE ONE-HOUR RATED FIRE DAMPER IN DUCT WORK. PROVIDE ACCESS PANEL IN DUCT AND CEILING. RE:#5/M302 FOR INSTALLATION. PROVIDE ACCESS PANEL IN DUCT AND IN CEILING.
13. LOCATE AIR HANDLING UNIT ON EQUIPMENT SUPPORTS. RE: SCHEDULE FOR REQUIREMENTS.
14. PROVIDE 18"x18" ACCESS PANEL IN HARD CEILING FOR SERVICING MECHANICAL EQUIPMENT ABOVE. LOCATE ACCESS PANEL DIRECTLY UNDERNEATH EQUIPMENT'S SERVICEABLE PARTS. FIELD COORDINATE EXACT LOCATION.
15. 16"x20" DUCT ROUTED IN CHASE FROM LEVEL BELOW. RE: #2/M101 FOR CONTINUATION.
16. PROVIDE REMOTE CABLE ACTUATED DAMPER EQUAL TO ROTOTWIST. DAMPER SHALL BE OPERABLE FROM AIR DEVICE FACE.

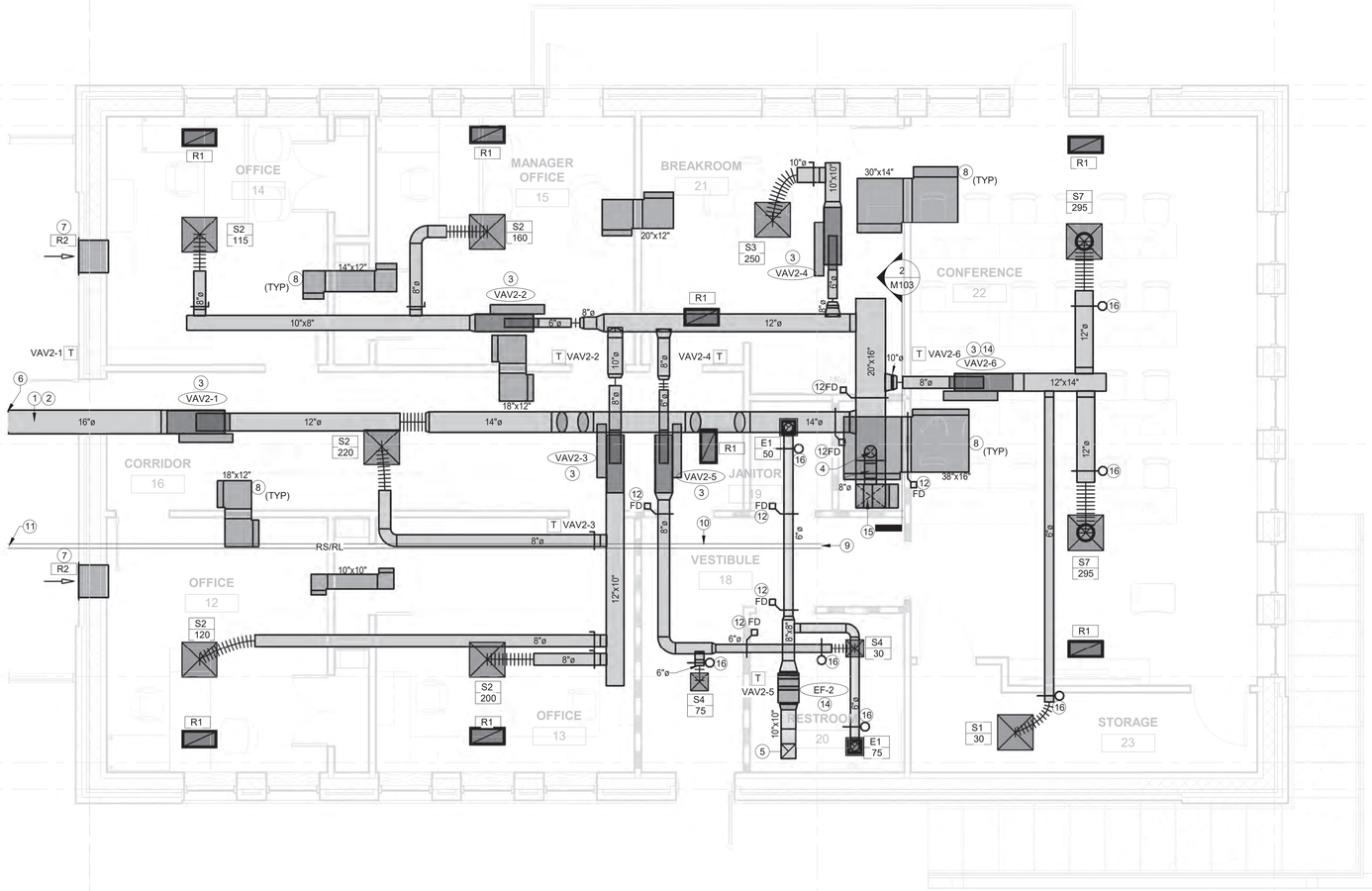

1 MECHANICAL ENLARGED FLOOR PLAN - AREA B
SCALE: 1/4" = 1'-0"

2 AHU-2 SECTION
SCALE: 3/8" = 1'-0"

TEXAS PARKS & WILDLIFE

FORD POWELL &CARSON
Architects & Planners, Inc.
Architecture
Planning
Preservation
Interior Design
1138 East Commerce Street
San Antonio, Texas 78205
210/226-1246
FPC# 92705

STATE OF TEXAS
MATTHEW E. BYNUM
122100
LICENSED
PROFESSIONAL ENGINEER
7-3-20
Alderson & Associates, Inc.
F-1008

ALDERSON & ASSOCIATES, INC.
MEP ENGINEERING | COMMISSIONING
7700 Torino St, Suite 101
San Antonio, TX 78216
Telephone: 210.614.1110
© 2020 Alderson & Associates, Inc. F-1008
PROJECT # 17012

TYLER STATE PARK
HEADQUARTERS REPLACEMENT PHASE 1
PROJECT NUMBER: 112741

DATE: 07/03/2020
DESIGNED BY: MMK
DRAWN BY: MMK
REVIEWED BY: MEB

no.	revision	date

SHEET TITLE
MECHANICAL ENLARGED FLOOR PLAN - AREA B

SHEET NUMBER
M103

CONSTRUCTION DOCUMENTS

PATH: BIM 360://17-012 Tyler State Park Visitor Center Replacement/17012 Tyler - M19.rvt
DATE: 7/2/2020 3:59:11 PM

AIR HANDLING UNIT SCHEDULE

MARK	TYPE	MIN. EER (@AHRI COND.)	MIN. IEER (@AHRI COND.)	FAN SECTION						COOLING (DX)						ELECTRICAL			WEIGHT (LBS)	MFG	MODEL	NOTES
				AIRFLOW (CFM)	E.S.P. (IN. W.G.)	OUTSIDE AIRFLOW (CFM)	FAN MOTOR (HP)	OPERATING HP (BHP)	DRIVE TYPE	MIN. TOTAL CAP. (MBH)	MIN. SENS. CAP. (MBH)	EAT (DB/WB)	LAT (DB/WB)	REFR.	ROWS / FINS PER INCH	VOLTS.	PH.	FLA (A)				
AHU-1	DX VERTICAL	11.2	12.8	2255	1.50	240	2.3	1.28	BELT	61.5	51.9	77.5/62.7	55.0/53.3	R-410A	6 / 7	230	1	7.0	625	AAON	V3-CRB	1-6
AHU-2	DX VERTICAL	11.2	12.8	3220	1.50	480	1.34	0.79	BELT	100.2	80.8	80.0/64.1	54.6/53.1	R-410A	6 / 7	230	1	13.2	750	AAON	V3-DRB	1-6

NOTES:
1. PROVIDE WITH MAGNAHELIC PRESSURE GAUGE
2. PROVIDE WITH STAINLESS STEEL DRAIN PAN
3. PROVIDE WITH 6 INCH BASE RAIL
4. PROVIDE 2" PLEATED MERV 7 PRE-FILTER AND MERV 13 FINAL FILTER IN FILTER RACK.
5. PROVIDE AIR FLOW MEASURING STATIONS INSTALLED PER CONTROL SPECIFICATIONS
6. PROVIDE EC MOTOR ON FAN
7. PROVIDE AUXILARY DRAIN PAN WITH KILL SWITCH.

CONDENSING UNIT SCHEDULE

MARK	SERVICE	MIN. EER (@AHRI COND.)	COP	AMBIENT TEMPERATURE (DEG F)	COOLING (DX)				ELECTRICAL				WEIGHT (LBS)	MFG	MODEL	NOTES
					MIN. COOLING CAP. (MBH)	APPROX. SAT. SUCTION TEMP. (DEG F)	REFRIGERANT	COMPRESSORS	VOLTS	PH.	MCA	MOP				
CU-1	AHU-1	10.5	3.3	105.0	61.5	45.0	R-410A	1	230	1	35	60	285	AAON	CB-B-060	1-4
CU-2	AHU-2	10.5	3.3	105.0	100.2	45.0	R-410A	1	230	1	53	70	1070	AAON	CFA-009	1-4

NOTES:
1. PROVIDE WITH REFRIGERANT LINE SETS. CONFIRM SIZES/LENGTHS WITH MANUFACTURER
2. PROVIDE AUXILARY DRAIN PAIN WITH KILL SWITCH
3. PROVIDE NEOPRENE PADS FOR VIBRATION ISOLATION
4. PROVIDE 3-1/2" CONCRETE HOUSEKEEPING PAD.

TERMINAL UNIT SCHEDULE

MARK	SERVICE	TYPE	INLET SIZE (IN.)	INLET PRESSURE (IN. W.G.)	MAX. PRIMARY CFM	MIN. PRIMARY CFM	UNIT PRESSURE LOSS (IN. W.G.)	MAX NC (RADIATED / DISCHARGED)	ELECTRIC SCR HEATING						MCA	MOP	MFG	MODEL	NOTES
									HEATING CFM	HEATING MBH	HEATING KW	VOLTS/ PHASE	EAT (F)	LAT (F)					
VAV1-1	RESTROOMS	SINGLE DUCT	6	0.75	135	70	0.50	-- / --	70	2.6	1.0	240/1	54	90	5.7	15	PRICE	SDV	1-3
VAV1-2	BREAK AREA, STAFF WORK AREA 9, RR 8	SINGLE DUCT	8	0.75	485	145	0.50	-- / --	145	5.5	2.0	240/1	54	90	11.3	15	PRICE	SDV	1-3
VAV1-3	STAFF WORK AREA 10	SINGLE DUCT	10	0.75	1055	320	0.50	-- / --	320	12.1	3.5	240/1	54	90	19.9	20	PRICE	SDV	1-3
VAV1-4	LOBBY	SINGLE DUCT	8	0.75	465	140	0.50	-- / --	140	5.3	2.0	240/1	54	90	11.3	15	PRICE	SDV	1-3
VAV1-5	OFFICE 5	SINGLE DUCT	6	0.75	140	70	0.50	-- / --	70	2.6	1.0	240/1	54	90	5.7	15	PRICE	SDV	1-3
VAV1-6	OFFICE 7	SINGLE DUCT	6	0.75	105	70	0.50	-- / --	70	2.6	1.0	240/1	54	90	5.7	15	PRICE	SDV	1-3
VAV2-1	INTERPRETIVE GALLERY	SINGLE DUCT	12	0.75	1240	375	0.50	-- / --	375	14.2	4.5	240/1	54	90	25.5	30	PRICE	SDV	1-3
VAV2-2	OFFICE 14 & MANAGER OFFICE	SINGLE DUCT	6	0.75	275	85	0.50	-- / 24	85	3.2	1.0	240/1	54	90	5.7	15	PRICE	SDV	1-3
VAV2-3	OFFICES 12 & 13, CORRIDOR	SINGLE DUCT	8	0.75	535	160	0.50	-- / 21	160	6.0	2.0	240/1	54	90	11.3	15	PRICE	SDV	1-3
VAV2-4	BREAKROOM	SINGLE DUCT	6	0.75	250	75	0.50	-- / 22	75	2.8	1.0	240/1	54	90	5.7	15	PRICE	SDV	1-3
VAV2-5	JANITOR, VESTIBULE, RR 20	SINGLE DUCT	6	0.75	105	70	0.50	-- / --	70	2.6	1.0	240/1	54	90	5.7	15	PRICE	SDV	1-3
VAV2-6	CONFERENCE	SINGLE DUCT	8	0.75	620	185	0.50	-- / 23	185	7.0	2.0	240/1	54	90	11.3	15	PRICE	SDV	1-3
VAV2-7	FILE STORAGE	SINGLE DUCT	6	0.75	240	75	0.50	-- / 21	75	2.8	1.0	240/1	54	90	5.7	15	PRICE	SDV	1-3

NOTES:
1. PROVIDE WITH DDC CONTROLS WITH TRANSFORMER
2. REFER TO PLANS TO DETERMINE "HANDEDNESS" OF TERMINAL UNIT
3. TERMINAL UNITS SHALL BE SINGLE WALL CONSTRUCTION WITH MATTE FACED FIBERGLASS INSULATION

EXHAUST FAN SCHEDULE

MARK	SERVICE	TYPE	WHEEL TYPE	AIRFLOW (CFM)	EXT. STATIC PRESS. (IN. W.G.)	MAX SOUND LEVEL (SONES)	DRIVE TYPE	FAN SPEED (RPM)	FAN POWER (HP)	MOTOR SIZE (HP)	MOTOR SPEED (RPM)	FAN CONTROL	ELECTRICAL		WEIGHT (LBS)	MFG	MODEL	NOTES
													VOLTS.	PH.				
EF-1	RESTROOMS 1&2	INLINE	BI CENTRIFUGAL	375	0.5	5.7	DIRECT	1342	0.16	1/6	1500	DDC	120	1	60	COOK	100SQN12D	1-4
EF-2	RESTROOM 20	INLINE	BI CENTRIFUGAL	125	0.4	4.0	DIRECT	1204	0.10	1/6	1600	DDC	120	1	55	COOK	90SQN12D	1-4

NOTES:
1. PROVIDE PREWIRED 120V FAN SPEED CONTROLLER
2. PROVIDE MOTORIZED TWO-POSITION DAMPER, SAME VOLTAGE AS FAN
3. PROVIDE WITH PREWIRED DISCONNECT
4. PROVIDE WITH RELAY IN A BOX. RE: CONTROL DRAWINGS

MINI-SPLIT FAN COIL UNIT SCHEDULE

MARK	SERVICE	TYPE	FAN MAX FLOW (CFM)	COOLING (DX) NOM. CAP. (BTU/HR)	HEATING NOM. CAP. (BTU/HR)	WEIGHT (LBS)	MFG	MODEL	NOTES
MS-1	IT 7	WALL MOUNT	775	22200	27300	50	DAIKIN	FTXB24AXVJU	1-4
MS-2	FEE BOOTH 25	WALL MOUNT	775	22200	27300	50	DAIKIN	FTXB24AXVJU	1-4

NOTES:
1. PROVIDE WITH WIRED, WALL-MOUNTED CONTROLLER
2. PROVIDE WITH REFRIGERANT LINE SETS. CONFIRM SIZES/LENGTHS WITH MANUFACTURER
3. PROVIDE GRAVITY CONDENSATE DRAIN. TIE INTO DRAIN BOX. RE: PLUMBING DRAWINGS
4. PROVIDE WITH LOW-AMBIENT COOLING KIT

MINI-SPLIT CONDENSING UNIT SCHEDULE

MARK	SERVICE	REFRIGERANT	ELECTRICAL				SEER	HSPF	WEIGHT (LBS)	MFG	MODEL	NOTES
			VOLTS	PH.	MCA (A)	MFA (A)						
MSCU-1	MS-1	R-410A	230	1	16.2	20	17.0	9	165	DAIKIN	RXB24AXVJU	1-3
MSCU-2	MS-2	R-410A	230	1	16.2	20	17.0	9	165	DAIKIN	RXB24AXVJU	1-3

NOTES:
1. PROVIDE WITH REFRIGERANT LINE SETS. CONFIRM SIZES/LENGTHS WITH MANUFACTURER.
2. PROVIDE FIELD INSTALLED HAIL GUARD.
3. PROVIDE 3-1/2" CONCRETE HOUSEKEEPING PAD.

UNIT HEATER SCHEDULE

MARK	SERVICE	TYPE	ELECTRIC HEAT INPUT (KW)	VOLTS.	PH.	WEIGHT (LBS)	MFG	MODEL	NOTES
UH-1	MECHANICAL 4	CONVECTION	3.5	240	1	50	REDD-I	H1HUH03003	1
UH-2	MECHANICAL 2	CONVECTION	3.5	240	1	50	REDD-I	H1HUH03003	1

NOTES:
1. PROVIDE WITH SUPPORT BRACKETS AND UNIT-MOUNTED THERMOSTAT

AIR DEVICE SCHEDULE

MARK	SERVICE	FACE SIZE (INCHES)	TAP/DUCT CONN. SIZE (INCHES)	MIN. FLOW (CFM)	MAX. FLOW (CFM)	MAX. NC	THROW PATTERN	MOUNT TYPE	PRICE*MODEL	DAMPER	FINISH	REMARKS
E1	EXHAUST	12x12	8" RND	0	250	20	--	SURFACE	80	ROTOTWIST	WHITE	EGGCRATE ALUMINUM CONSTRUCTION; 1/2" X 1/2" X 1/2" GRATE; PLASTER FRAME
R1	RETURN	24x12	22x10	0	450	10	--	LAY-IN	80F	NO	WHITE	LAY-IN T-BAR FRAME; ALUMINUM; W/ THERMAL BACKPAN BLANKET
R2	RETURN	24x8	22x6	0	600	12	--	WALL	630	ROTOTWIST	MATCH WALL	PLASTER FRAME; DOUBLE DEFLECTION; BLADES PARALLEL TO SHORT DIMENSION
S1	SUPPLY	24x24	6" RND	0	100	10	2-WAY	LAY-IN	SCD	NO	WHITE	LAY-IN T-BAR FRAME; ALUMINUM; W/ THERMAL BACKPAN BLANKET
S2	SUPPLY	24x24	8" RND	101	225	12	2-WAY	LAY-IN	SCD	NO	WHITE	LAY-IN T-BAR FRAME; ALUMINUM; W/ THERMAL BACKPAN BLANKET
S3	SUPPLY	24x24	10" RND	226	350	16	2-WAY	LAY-IN	SCD	NO	WHITE	LAY-IN T-BAR FRAME; ALUMINUM; W/ THERMAL BACKPAN BLANKET
S4	SUPPLY	12x12	6" RND	0	100	10	2-WAY	SURFACE	SCD	ROTOTWIST	WHITE	PLASTER FRAME; ALUMINUM; W/ THERMAL BACKPAN BLANKET
S5	SUPPLY	20x6	18x4	150	300	24	2-WAY	DUCT MOUNTED	SDG	AIR SCOOP	WHITE	3/4" BLADE SPACING; DOUBLE DEFLECTION; BLADES PARALLEL TO SHORT DIMENSION
S6	SUPPLY	20x8	18x6	250	400	20	2-WAY	DUCT MOUNTED	SDG	AIR SCOOP	WHITE	3/4" BLADE SPACING; DOUBLE DEFLECTION; BLADES PARALLEL TO SHORT DIMENSION
S7	SUPPLY	24x24	10" RND	226	350	16	2-WAY	WALL	620	ROTOTWIST	WHITE	PLASTER FRAME; ALUMINUM; W/ THERMAL BACKPAN BLANKET
X1	TRANSFER	12x12	10x10	0	350	10	--	SURFACE	80	ROTOTWIST	WHITE	PLASTER FRAME; DOUBLE DEFLECTION; BLADES PARALLEL TO SHORT DIMENSION

GENERAL NOTES:
1. FRAMES SHALL BE SUITABLE FOR CEILING OR FINISH TYPE. REFER TO ARCHITECTURAL DOCUMENT.
2. PROVIDE SQUARE TO ROUND ADAPTERS WHERE REQUIRED.
3. SEE PLANS FOR ADDITIONAL NOTES ON SPECIFIC ACCESSORIES OR INSTALLATION REQUIREMENTS.

TEXAS PARKS & WILDLIFE

FORD POWELL &CARSON
Architects & Planners, Inc.
Architecture
Planning
Preservation
Interior Design
1138 East Commerce Street
San Antonio, Texas 78205
210/226-1246
FPC# 92705

STATE OF TEXAS
MATTHEW E. BYNUM
122100
LICENSED
PROFESSIONAL ENGINEER
7-3-20
Alderson & Associates, Inc.
F-1008

ALDERSON ASSOCIATES, INC
MEP ENGINEERING | COMMISSIONING
7700 Torino St, Suite 101
San Antonio, TX 78229
Texas Reg. No. 21614110
PROJECT # 17012

© 2020 Alderson & Associates, Inc. F-1008

TYLER STATE PARK
HEADQUARTERS REPLACEMENT PHASE 1
PROJECT NUMBER: 112741

DATE: 07/03/2020
DESIGNED BY: MMK
DRAWN BY: MMK
REVIEWED BY: MEB

no.	revision	date

SHEET TITLE
MECHANICAL SCHEDULES

SHEET NUMBER
M201

CONSTRUCTION DOCUMENTS

PATH:BIM 360://17-012 Tyler State Park Visitor Center Replacement/17012 Tyler - M19.rvt
DATE: 7/2/2020 3:59:12 PM

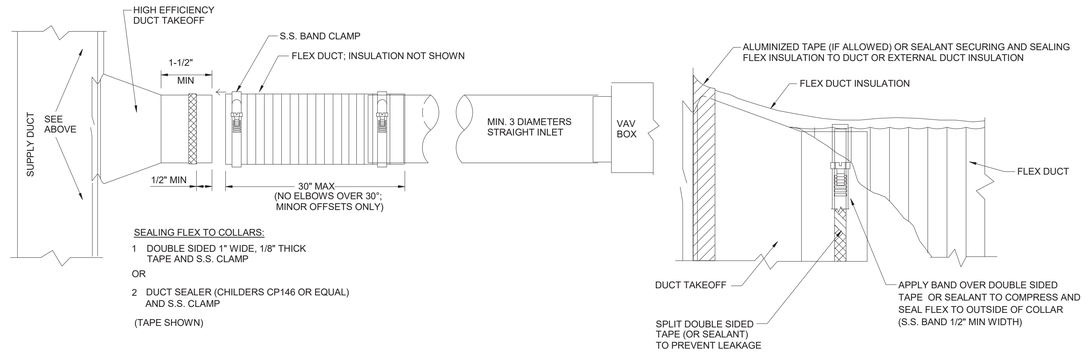

1 MEDIUM PRESSURE FLEX DUCT CONNECTIONS TO VAV BOX

NO SCALE

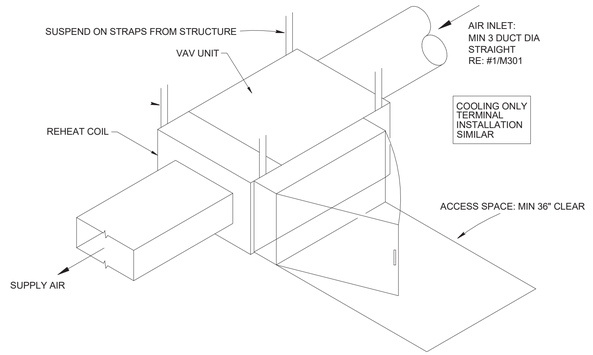

2 VAV TERMINAL UNIT WITH ELECTRIC REHEAT COIL

NO SCALE

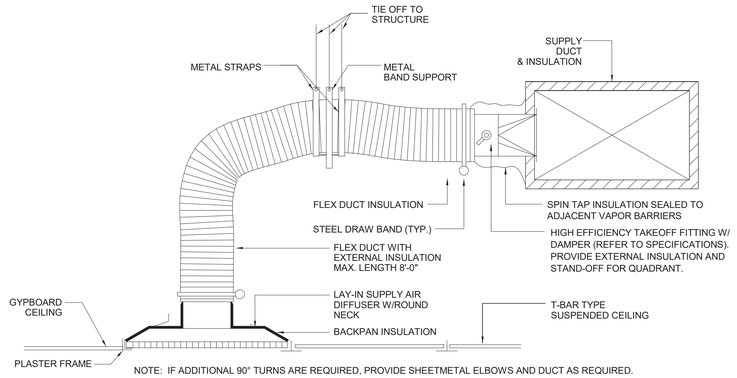

NOTE: IF ADDITIONAL 90° TURNS ARE REQUIRED, PROVIDE SHEETMETAL ELBOWS AND DUCT AS REQUIRED.

3 SUPPLY AIR DIFFUSER DETAIL - GYP BOARD/LAY-IN CEILING

NO SCALE

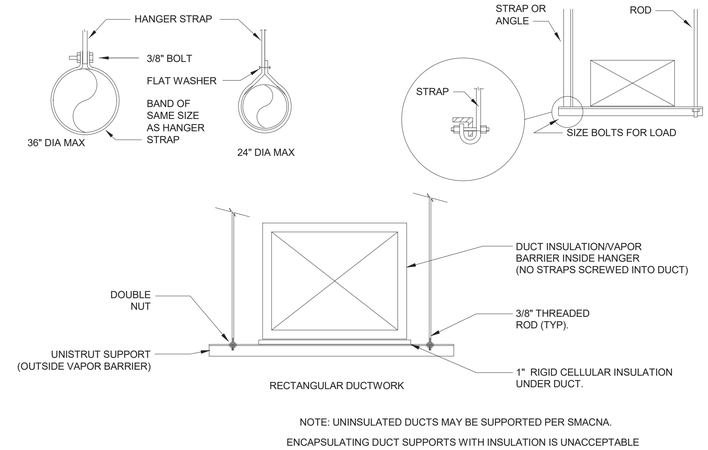

NOTE: UNINSULATED DUCTS MAY BE SUPPORTED PER SMACNA.

ENCAPSULATING DUCT SUPPORTS WITH INSULATION IS UNACCEPTABLE

4 DUCT HANGER DETAIL

NO SCALE

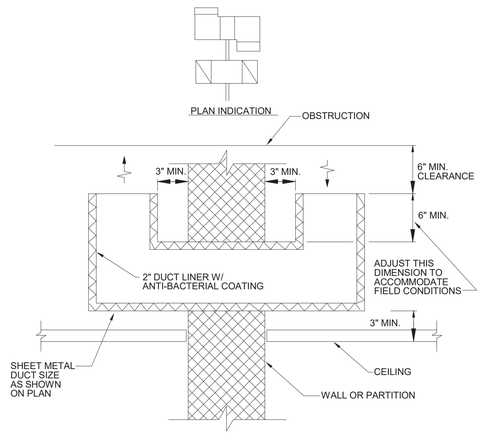

5 RETURN AIR TRANSFER

NO SCALE

OFFSETS 2 AND 3 AND TRANSITIONS MAY HAVE EQUAL OR UNEQUAL INLET AND OUTLET AREAS. TRANSITIONS MAY CONVERT DUCT PROFILES TO ANY COMBINATION FOR RECTANGULAR, ROUND OR FLAT OVAL SHAPES.

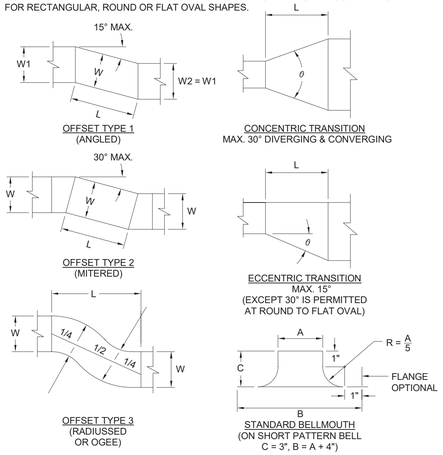

6 OFFSETS AND TRANSITIONS

NO SCALE

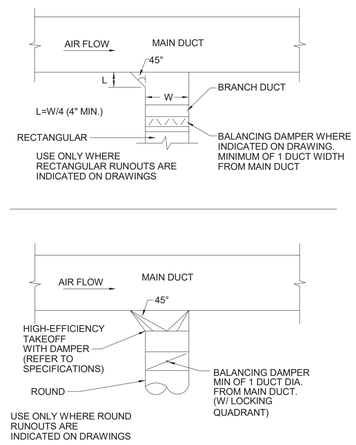

7 TYPICAL BRANCH CONNECTION

NO SCALE

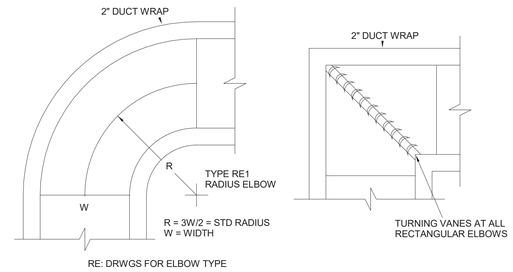

RE: DRWGS FOR ELBOW TYPE

8 ELBOWS

NO SCALE

TEXAS PARKS & WILDLIFE

FORD POWELL & CARSON Architects & Planners, Inc.
Architecture
Planning
Preservation
Interior Design
1138 East Commerce Street
San Antonio, Texas 78205
210/226-1246
FPC# 92705

STATE OF TEXAS
MATTHEW E. BYNUM
122100
LICENSED PROFESSIONAL ENGINEER
7-3-20
Alderson & Associates, Inc. F-1008

ALDERSON & ASSOCIATES, INC. MEP ENGINEERING | COMMISSIONING
7700 Torino St, Suite 101
San Antonio, TX 78223
Telephone: 210.614.4110
© 2020 Alderson & Associates, Inc. F-1008
PROJECT # 17012

TYLER STATE PARK

HEADQUARTERS REPLACEMENT PHASE 1

PROJECT NUMBER: 112741

DATE: 07/03/2020
DESIGNED BY: MMK
DRAWN BY: MMK
REVIEWED BY: MEB

no.	revision	date

SHEET TITLE

MECHANICAL DETAILS

SHEET NUMBER

M301

CONSTRUCTION DOCUMENTS

PATH: BIM 360://17-012 Tyler State Park Visitor Center Replacement/17012 Tyler - M19.rvt
DATE: 7/2/2020 3:59:12 PM

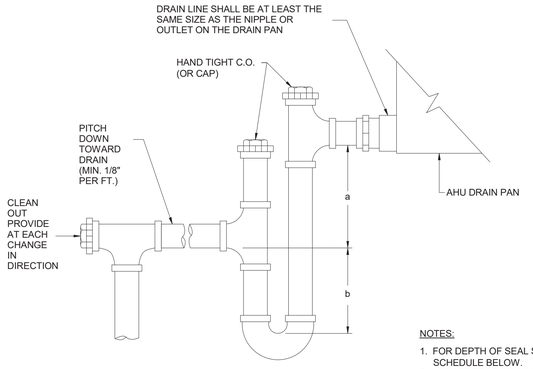

NOTES:

1. FOR DEPTH OF SEAL SEE SCHEDULE BELOW.
2. LOCATE TRAP SO AS TO BE ACCESSIBLE FOR CLEANING.
3. RAISE UNIT AS NECESSARY TO PROVIDE CLEARANCE FOR TRAP.
4. PROVIDE SECONDARY DRAIN PAN IF UNIT IS MOUNTED ABOVE CEILING; PIPE DRAIN TO DESIGNATED AREA OR PROVIDE FAN KILL SWITCH AS INDICATED.

UNIT STATIC PRESSURE	a	b
0-1"	2"	1"
1"-2"	3"	2"
2"-3"	4"	3"
3"-4"	5"	4"
4"-5"	6"	5"

1 DRAW THROUGH CONDENSATE DRAIN TRAP DETAIL

NO SCALE

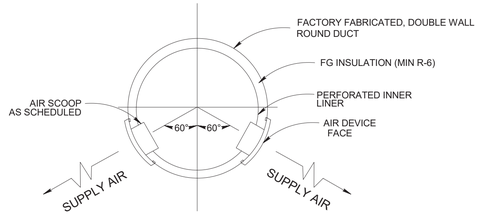

NOTES:

1. GRILLE PRICE MODEL SDG.
2. AIR DEVICES SHALL BE MOUNTED 30" BELOW PARALLEL UNLESS OTHERWISE NOTED ON FLOOR PLAN.

2 DOUBLE WALL DUCTWORK WITH GRILLE MOUNTING DETAIL

NO SCALE

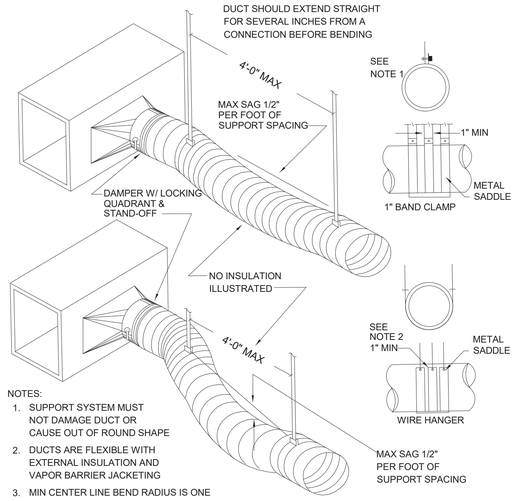

NOTES:

1. SUPPORT SYSTEM MUST NOT DAMAGE DUCT OR CAUSE OUT OF ROUND SHAPE
2. DUCTS ARE FLEXIBLE WITH EXTERNAL INSULATION AND VAPOR BARRIER JACKETING
3. MIN CENTER LINE BEND RADIUS IS ONE DIA. (OR INSIDE RADIUS OF D/2)
4. MAX LENGTH OF FLEX DUCT SHALL BE 8'-0"
5. ATTACH INNER FLEX DUCT SLEEVE WITH DRAW BAND.
6. ATTACH OUTER FLEX DUCT INSULATION WITH FOIL TAPE OR SEALANT AS SPEC'D.
7. PROVIDE 2" STANDOFF ON QUADRANT HANDLE.

3 STRAIGHT SECTION FLEXIBLE DUCT SUPPORT REQUIREMENTS

NO SCALE

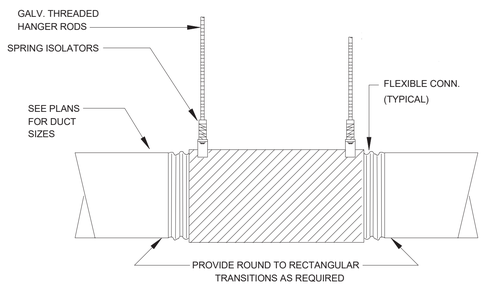

4 IN-LINE FAN MOUNTING DETAIL

NO SCALE

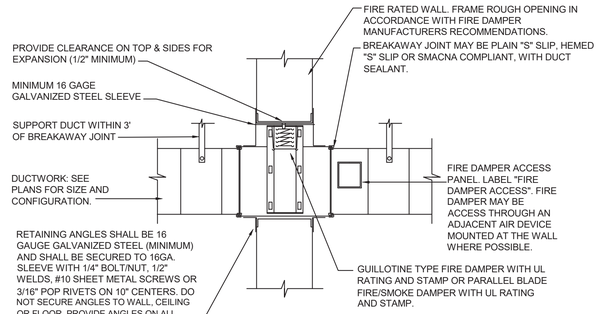

NOTE:
PENETRATIONS IN FLOORS OR CEILINGS SHALL BE SIMILAR EXCEPT A HORIZONTAL FIRE DAMPER SHALL BE USED.

5 FIRE DAMPER DETAIL

NO SCALE

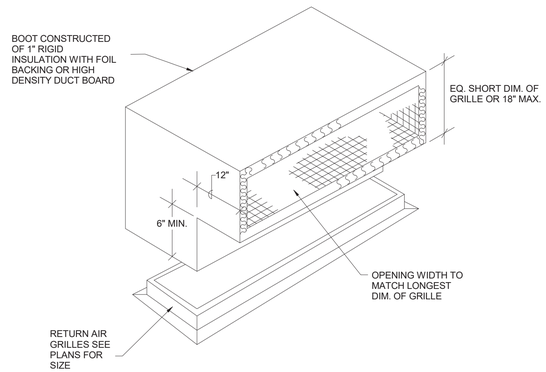

NOTE: LOCATE ADJACENT BOOTS AT RIGHT ANGLE TO EACH OTHER.
NOTE: PROVIDE ON ALL CEILING-MOUNTED RETURN GRILLES.

6 RETURN AIR GRILLE SOUND BOOT DETAIL

NO SCALE

TEXAS PARKS & WILDLIFE

FORD POWELL &CARSON
Architects & Planners, Inc.
Architecture
Planning
Preservation
Interior Design
1138 East Commerce Street
San Antonio, Texas 78205
210/226-1246
FPC# 92705

STATE OF TEXAS
MATTHEW E. BYNUM
122100
LICENSED
PROFESSIONAL ENGINEER
7-3-20
Alderson & Associates, Inc.
F-1008

ALDERSON & ASSOCIATES, INC.
MEP ENGINEERING | COMMISSIONING
7700 Torino St, Suite 101
San Antonio, TX 78250
Telephone: 210.614.1110
© 2020 Alderson & Associates, Inc. F-1008
PROJECT # 17012

TYLER STATE PARK
HEADQUARTERS REPLACEMENT PHASE 1
PROJECT NUMBER: 112741

DATE: 07/03/2020
DESIGNED BY: MMK
DRAWN BY: MMK
REVIEWED BY: MEB

no.	revision	date

SHEET TITLE
MECHANICAL DETAILS

SHEET NUMBER
M302

CONSTRUCTION DOCUMENTS

PATH: BIM 360://17-012 Tyler State Park Visitor Center Replacement/17012 Tyler - M19.rvt
DATE: 7/2/2020 3:59:12 PM

SYMBOLS LEGEND

(NOT ALL SYMBOLS MAY BE USED)

H — DUCT HUMIDITY SENSOR

AFMS — ELECTRONIC AIR FLOW MEASURING STATION

T(F) — ZONE TEMPERATURE SENSOR

H — ZONE HUMIDITY SENSOR

H / C — ELECTIC HEATING COIL

D / X — DIRECT EXPANSION COOLING SYSTEM

DPS — DUCT STATIC HIGH LIMIT – MANUAL RESET

DPT — DUCT STATIC PRESSURE TRANSMITTER

DPS / FILTER — DIRTY FILTER DIFFERENTIAL PRESSURE SWITCH – AUTO RESET

MS/TP — BACNET MS/TP NETWORK CONNECTION

ACT — MOTORIZED CONTROL DAMPER

REMOTE ACCESS LAPTOP PROVIDED BY CONTROLS CONTRACTOR

GLOBAL BUILDING CONTROLLER — BAS IP GLOBAL BUILDING CONTROLLER; BROWSER ACCESS

BAS NETWORK — OWNERS ETHERNET NETWORK

WORKSTATION WITH BROWSER

OWNER PROVIDED NETWORK FIREWALL

G / H — GAS HEATER

LIST OF ACRONYMS FOR CONTROL DIAGRAMS

AI	ANALOG INPUT
AO	ANALOG OUTPUT
ASHRAE	AMERICAN SOCIETY OF AIR CONDITIONING AND REFRIGERATION ENGINEERS
BACNET	BUILDING AUTOMATION AND CONTROL NETWORK (ASHRAE 135-2010)
BI	BINARY INPUT
BO	BINARY OUTPUT
BO BO	TRI-STATE, FLOATING POINT OR 3 WIRE CONTROL
ACT	ACTUATOR
AFMS	AIR FLOW MEASURING STATION
AVG	AVERAGING TEMPERATURE ELEMENT
CSR	CURRENT SENSING RELAY
CTX	CURRENT TRANSDUCER
D2%	DUCT HUMIDITY 2% ACCURACY
DDC	DIRECT DIGITAL CONTROL
DX	DIRECT EXPANSION
DPS	DIFFERENTIAL PRESSURE SWITCH
DPT	DIFFERENTIAL PRESSURE TRANSMITTER
E/D	ENABLE/DISABLE
HUM	HUMIDITY
IP	INTERNET PROTOCOL
MOD	MODULATING CONTROL (2-10VDC, 0-5VDC R 4-20MA)
MS/TP	MASTER SLAVE TOKEN PASSING
RIB	RELAY IN A BOX (VERIS INDUSTRIES OR EQUAL)
RLY	RELAY
SP	SINGLE POINT TEMPERATURE ELEMENT (12" OR 24" AS REQUIRED)
S/S	START/STOP
TRISTATE	FLOATING POINT OR 3 WIRE CONTROL OF AN ACTUATOR
TS	TERMINAL STRIP
VAV	VARIABLE AIR VOLUME
VFD OR VSD	VARIABLE FREQUENCY OR SPEED DRIVE
VPN	VIRTUAL PRIVATE NETWORK

WIRING LEGEND

S1 — SENSOR WIRING – 2 OR 3 CONDUCTOR WITH OR WITHOUT SHIELD AS REQUIRED

C1 — MS/TP – 2 CONDUCTOR W/ SHIELD

E1 — ETHERNET - 8 CONDUCTOR

POINT LABEL LEGEND

POINT DESCRIPTOR	
INPUT/OUTPUT TYPE (AO,AI,BO,BI)	SIGNAL TYPE

DOUBLE LABEL TYPE

POINT DESCRIPTOR	
INPUT/OUTPUT TYPE (AO,AI,BO,BI)	INPUT/OUTPUT NAME
INPUT/OUTPUT TYPE (AO,AI,BO,BI)	INPUT/OUTPUT NAME

TRIPLE LABEL TYPE

BAS GENERAL REQUIREMENTS

ADJUSTMENT OF SETPOINTS AND TIME DELAYS/CONSTANTS : ALL SETPOINTS, TIME DELAYS AND TIME CONSTANTS SHALL BE EXPOSED FOR ADJUSTMENT DURING TEST & BALANCE AND COMMISSIONING REGARDLESS IF THE VALUE IS MARKED (ADJ) IN THE SEQUENCE.

USER ADJUSTMENT OF SETPOINTS AND TIME CONSTANTS : ALL SETPOINTS AND TIME CONSTANTS SHALL BE ADJUSTABLE BY THE USER WITH APPROPRIATE LOGIN CREDENTIALS.

ALARMS : PROGRAM TWO LEVELS OF ALARMS; CRITICAL AND EQUIPMENT. CRITICAL ALARMS SHALL BE DEFINED AS THOSE ALARMS WHICH IF NOT RESPONDED TO WILL RESULT IN SUBSTANTIAL DAMAGE TO EQUIPMENT OR IMPACT PERSONNEL SAFETY. EQUIPMENT ALARMS SHALL BE DEFINED AS THOSE ALARMS WHICH ARE MORE ROUTINE WHICH CAN BE CLEARED DURING THE NEXT SCHEDULED MAINTENANCE VISIT. COORDINATE WITH OWNER AS REQUIRED.

FREEZE PROTECTION: ALL TEMPERATURE SENSORS SHALL BE LOW TEMPERATURE DEVICES IN THE BAS.

OUT-OF-SERVICE FLAGS : THE BAS SHALL BE PROGRAMMED WITH OUT-OF-SERVICE FLAGS FOR EACH PIECE OF EQUIPMENT SUCH THAT AN OPERATOR OR THE BAS CAN REMOVE A PIECE OF EQUIPMENT FROM SERVICE. WHEN ANY PIECE OF EQUIPMENT HAS ITS OUT-OF-SERVICE FLAG SET, THE EQUIPMENT SHALL NOT BE AUTOMATICALLY ENABLED BY THE BAS. THE BAS SHALL HAVE A SUMMARY PAGE LISTING ALL EQUIPMENT AND THE ASSOCIATED OUT-OF-SERVICE FLAG STATUS WITH A CHECKBOX FOR THE USER TO SET THE OUT-OF-SERVICE FLAG.

RECOGNITION OF FAILED EQUIPMENT : THE BAS SHALL AUTOMATICALLY SET AN OUT OF SERVICE FLAG FOR ANY PIECE OF EQUIPMENT THAT FAILS TO INDICATE RUN STATUS ON THREE CONSECUTIVE ATTEMPTS TO RUN.

DEAD-BANDS : ALL HEATING AND COOLING SETPOINTS SHALL BE SEPARATED BY A MINIMUM OF 5F (ADJ)

BAS DESIGN STANDARDS : CONTROL CONTRACTOR TO REFERENCE AND INCORPORATE OWNER BAS DESIGN STANDARDS AS REQUIRED. CONTRACTOR SHALL PROVIDE ALL PASSWORDS TO OWNER PRIOR TO SUBSTANTIAL COMPLETION. CONTRACTOR SHALL PROVIDE FULL OWNERSHIP OF BAS SOFTWARE TO TPWD WITHOUT ANNUAL OR PERIODIC FEES OR CHARGES. SOFTWARE SHALL BE OPEN AND NON-PROPRIETARY. SOFTWARE UPGRADE(S) SHALL BE AT THE OPTION OF TPWD.

GLOBAL POINTS : OUTSIDE AIR TEMPERATURE AND HUMIDITY SHALL BE MEASURED AT THE CAMPUS AND USED GLOBALLY.

SYSTEM DESIGN: THE BAS SHALL MONITOR ALL POINTS AS INDICATED ON THE CONTROL DIAGRAMS AND ON THE PLANS. IF ADDITIONAL POINTS ARE NEEDED TO ACHIEVE A WORKING SYSTEM OR SEQUENCE OF OPERATION, THE CONTROLS CONTRACTOR SHALL PROVIDE THOSE DEVICES, INSTALLATION, PROGRAMMING, AND GRAPHICS GENERATION AS REQUIRED AND WITHOUT ADDITIONAL COST TO THE OWNER.

OWNERS PROGRAM REQUIREMENTS:
- OCCUPIED SCHEDULE – COORDINATE WITH FACILITY STAFF
- UNOCCUPIED SCHEDULE – COORDINATE WITH FACILITY STAFF
- OCCUPIED SETPOINTS:
- COOLING SETPOINT – 75°F
- HEATING SETPOINT – 70°F
- DEHUMIDIFICATION SETPOINT – 60%RH
- UNOCCUPIED SETPOINTS:
- COOLING SETPOINT – 85°F
- HEATING SETPOINT – 63°F

EQUIPMENT LABELS : DESIGNATION OF EQUIPMENT SHALL FOLLOW STANDARDS INDICATED ON DRAWINGS.

CASCADED GRAPHIC USER INTERFACE REQUIREMENTS

GENERAL – ON ALL GRAPHICS
- DISPLAY TIME, OUTSIDE AIR TEMPERATURE AND OUTSIDE AIR HUMIDITY ON EACH GRAPHIC.
- PROVIDE NAVIGATION LINKS TO SCHEDULING, TRENDS, & ALARMS.
- PROVIDE NAVIGATION LINK TO THE CAMPUS LEVEL GRAPHIC AND BUILDING LEVEL GRAPHIC.
- ENSURE STANDARD OPERATION OF BACKWARD AND FORWARD BUTTON ON BROWSER.
- PROVIDE COLOR ANIMATION TO INDICATE RUN STATUS.

BUILDING LEVEL GRAPHIC
- DISPLAY EQUIPMENT ON FLOORPLANS.
- OUTLINE EACH HVAC ZONE WITH BOLD LINES.
- DISPLAY THERMOGRAPH ON FLOORPLAN (I.E. COLOR SHADING TO REPRESENT TEMPERATE DEVIATION FROM SETPOINT).

EQUIPMENT GRAPHICS
- DISPLAY EQUIPMENT GRAPHIC THAT DEPICTS THE ACTUAL CONFIGURATION OF THE EQUIPMENT.
- DISPLAY EACH POINT VALUE IN THE APPROPRIATE PLACE ON THE EQUIPMENT.
- PROVIDE OVERRIDE CAPABILITY FOR OUTPUT POINTS FROM EQUIPMENT GRAPHIC.
- PROVIDE ANIMATION TO INDICATE OPERATIONAL POINTS.
- PROVIDE INDICATION OF PROGRAM OUTPUTS SUCH AS, BUT NOT LIMITED TO, COOLING MODE, DEHUMIDIFICATION, OCCUPIED/UNOCCUPIED, ETC.
- DISPLAY OUT OF SERVICE FLAG STATUS WITH CHECKBOX TO TOGGLE OUT OF SERVICE FLAG.

SUMMARY PAGE GRAPHICS
- PROVIDE SUMMARY LIST OF ALL DISCHARGE AIR TEMPERATURES, DISCHARGE AIR TEMPERATURE SETPOINTS AND OCCUPIED/UNOCCUPIED SCHEDULE STATUS.
- PROVIDE A SUMMARY LIST OF ALL TERMINAL UNIT SUPPLY TEMPERATURES, ZONE TEMPERATURES AND ZONE TEMPERATURE SETPOINTS.
- PROVIDE SUMMARY LIST OF ALL EQUIPMENT WITH OUT OF SERVICE FLAGS.
- PROVIDE SUMMARY LIST OF ALL EXHAUST FAN STATUS.
- PROVIDE SUMMARY OF TERMINAL UNIT AIR FLOW REQUEST STATUS PAGE PER AHU (I.E. SUPPLY/SETPOINT AIRFLOW WITH RATIO, ZONE TEMPERATURE AND ZONE SETPOINT.

OWNER REQUESTED GRAPHICS
- PROVIDE OWNER REQUESTED GRAPHICS FOR BUILDING PERSONNEL AND OPERATIONS.
- COORDINATE WITH FACILITY STAFF AND ENGINEER AS REQUIRED TO ACHIEVE OWNER DESIRED GRAPHIC PAGES.

BAS COMMISSIONING REQUIREMENTS

CONTROLS CONTRACTOR SHALL SUBMIT THE FOLLOWING TO THE ENGINEER AND COMMISSIONING AGENT PRIOR TO SYSTEMS CHECK IN ELECTRONIC FORMAT:

- PROVIDE COMPLETED LOG OF POINT-TO-POINT CHECKOUT OF ALL HARDWARE POINTS IN SYSTEM (SCANNED PDF).
- PROVIDE A WRITTEN CERTIFICATION THAT THE CONTROL SEQUENCES HAVE BEEN CHECKED OUT AND ARE OPERATIONAL (SCANNED PDF).
- PROVIDE A PDF COPY OF ALL PROGRAMMING, BY CONTROLLER.
- PROVIDE A PDF COPY OF ALL GRAPHICS INSTALLED IN THE SYSTEM.
- CONTROLS CONTRACTOR TO COMMISSION 100% OF ALL SYSTEMS.

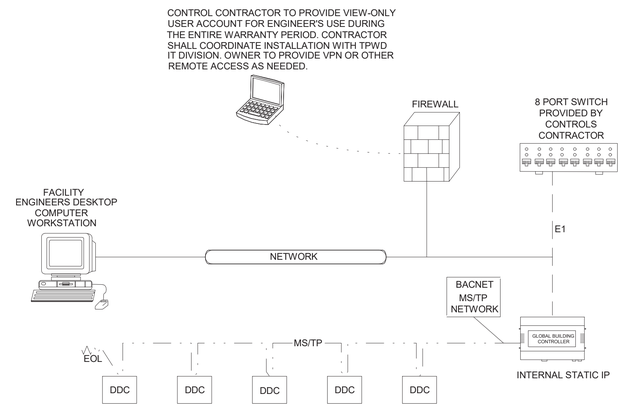

1 BAS NETWORK DIAGRAM

NO SCALE

TEXAS PARKS & WILDLIFE

FORD POWELL & CARSON
Architects & Planners, Inc.
Architecture
Planning
Preservation
Interior Design
1138 East Commerce Street
San Antonio, Texas 78205
210/226-1246
FPC# 92705

STATE OF TEXAS — MATTHEW E. BYNUM — 122100 — LICENSED PROFESSIONAL ENGINEER — 7-3-20
Alderson & Associates, Inc. F-1008

ALDERSON & ASSOCIATES, INC. MEP ENGINEERING | COMMISSIONING
7700 Torino St, Suite 101
San Antonio, TX 78252
Tel: (210) 614-1110

© 2020 Alderson & Associates, Inc. F-1008

PROJECT # 17012

TYLER STATE PARK
HEADQUARTERS REPLACEMENT PHASE 1
PROJECT NUMBER: 112741

DATE: 07/03/2020
DESIGNED BY: MMK
DRAWN BY: MMK
REVIEWED BY: MEB

no.	revision	date

SHEET TITLE
MECHANICAL CONTROLS

SHEET NUMBER
M401

CONSTRUCTION DOCUMENTS

PATH: BIM 360://17-012 Tyler State Park Visitor Center Replacement/17012 Tyler – M19.rvt
DATE: 7/2/2020 3:59:13 PM

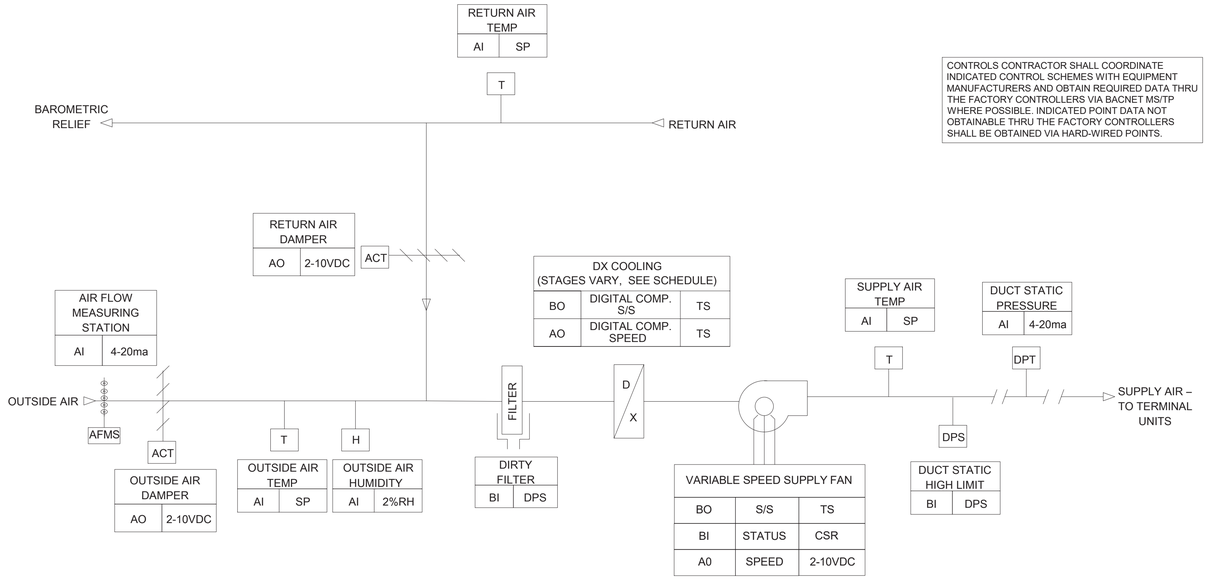

CONTROLS CONTRACTOR SHALL COORDINATE INDICATED CONTROL SCHEMES WITH EQUIPMENT MANUFACTURERS AND OBTAIN REQUIRED DATA THRU THE FACTORY CONTROLLERS VIA BACNET MS/TP WHERE POSSIBLE. INDICATED POINT DATA NOT OBTAINABLE THRU THE FACTORY CONTROLLERS SHALL BE OBTAINED VIA HARD-WIRED POINTS.

1 VAV DX SYSTEM CONTROL DIAGRAM

NO SCALE

VAV DX SYSTEM SEQUENCE OF OPERATION:

THE SYSTEM SHALL RUN SUBJECT TO THE OCCUPIED AND UNOCCUPIED SCHEDULES ADJUSTED FOR OPTIMAL START.

OPTIMAL START:
DURING OPTIMAL START, THE BAS SHALL OPEN THE RETURN AIR DAMPER 100%, START/MODULATE THE SUPPLY FAN AND STAGE/MODULATE THE COMPRESSORS TO MAINTAIN DISCHARGE AIR TEMPERATURE SETPOINT AS SPECIFIED. THE BAS SHALL AUTOMATICALLY ADJUST THE DAILY START TIME OF THE SYSTEM TO ACHIEVE OCCUPIED SETPOINTS JUST PRIOR TO THE SCHEDULED OCCUPIED PERIOD. THE OUTSIDE AIR DAMPER SHALL REMAIN CLOSED DURING THE OPTIMAL START PERIOD UNLESS THE UNIT IS IN ECONOMIZER MODE.

OCCUPIED MODE:
UNIT START: THE BAS SHALL OPEN THE RETURN AIR DAMPER 100% AND AFTER A 60 SECOND DELAY SOFT START THE SUPPLY FAN, AND STAGE/MODULATE THE COMPRESSORS TO MAINTAIN LEAVING AIR TEMPERATURE SETPOINT. AFTER 60 SECONDS OF SUPPLY FAN OPERATION, THE BAS SHALL OPEN THE OUTSIDE AIR DAMPER 15% AND FOLLOWING A BRIEF STABILIZATION DELAY THE DEMAND VENTILATION SEQUENCE BELOW SHALL BE FOLLOWED.

DX COOLING: THE BAS SHALL STAGE/MODULATE THE COMPRESSORS TO MAINTAIN A STEADY AND CONSISTENT 55F DISCHARGE AT THE DISCHARGE OF THE UNIT.

DEHUMIDIFICATION MODE: THE BAS SHALL CONTINUOUSLY MONITOR THE ZONE HUMIDITY LEVELS. ANYTIME THE HUMIDITY, AS MEASURED AT A SPACE MOUNTED HUMIDITY SENSOR, EXCEEDS 60%, THE BAS SHALL RESET THE SUPPLY AIR DISCHARGE SETPOINT TO 52°F AND THE TERMINAL UNITS SHALL MODULATE TO MAINTAIN SPACE TEMPERATURE AS SPECIFIED. THE BAS SHALL TERMINATE THE DEHUMIDIFICATION MODE WHEN THE SPACE HUMIDITY LEVEL REACHES 55%.

SUPPLY DUCT STATIC PRESSURE CONTROL: THE BAS SHALL SMOOTHLY MODULATE THE SPEED OF THE SUPPLY FAN IN RESPONSE TO THE DUCT STATIC PRESSURE SET POINT. THE DUCT STATIC PRESSURE SET POINT SHALL BE RESET BASED ON ZONE AIR FLOW REQUESTS DERIVED FROM DAMPER POSITION AND MEETING AIRFLOW AND SPACE TEMPERATURE REQUIREMENTS AS FOLLOWS:

WHEN ALL ZONE DAMPERS ARE THROTTLING CLOSED: DAMPER ACTUATORS ARE LESS THAN 90% OPEN AND ACTUAL/MAX DESIGN AIRFLOW RATIO IS GREATER THAN 95%. THE DUCT STATIC PRESSURE SET POINT SHALL BE INCREMENTALLY RESET DOWN BY 0.10"WC AT A FREQUENCY OF 10 MINUTES TO A MINIMUM OF 0.50"WC OR THE FAN HAS REACHED ITS LOWEST OPERATING SPEED LIMIT.

WHEN AIRFLOW REQUESTS INCREASE: AT LEAST ONE ZONE DAMPER IS GREATER THAN 99% OPEN AND ACTUAL/MAX DESIGN AIRFLOW RATIO IS LESS THAN 90% AND SPACE TEMPERATURE IS NOT SATISFIED THE DUCT STATIC PRESSURE SET POINT SHALL INCREMENTALLY RESET UP BY 0.10"WC AT A FREQUENCY OF 3 MINUTES TO A MAXIMUM OF 3.0"WC.

SUPPLY AIR RESET: THE SUPPLY AIR TEMPERATURE SETPOINT SHALL BE RESET BASED ON OUTSIDE AIR TEMPERATURE AS MEASURED BY THE BAS. WHEN THE BAS REGISTERS AN OUTSIDE AIR TEMPERATURE BELOW 57°F (ADJ.), THE SUPPLY AIR DISCHARGE TEMPERATURE SHALL BE PROPORTIONALLY RESET HIGHER UP TO A MAXIMUM LEAVING AIR TEMPERATURE OF 60°F (ADJ.). SPECIFICALLY, THE SUPPLY AIR TEMPERATURE SHALL BE RESET HIGHER 1°F FOR EVERY 2°F DROP IN AMBIENT TEMPERATURE BELOW 57°F. IN THE EVENT THAT THE SUPPLY AIR TEMPERATURE HAS BEEN ACTIVELY RESET AND TWO OR MORE ZONES ARE REPORTING A SPACE TEMPERATURE > 2°F ABOVE SET POINT, THE SUPPLY AIR TEMPERATURE SHALL BE RESET 1°F LOWER IN 10 MINUTE INTERVALS UNTIL EITHER THE ZONE TEMPERATURES ARE WITHIN 1°F OF SETPOINT OR THE SUPPLY AIR TEMPERATURE SETPOINT HAS RETURNED TO 55°F. THE RESET SCHEDULE, INTERVAL RESET POINTS AND TIME DELAYS SHALL ALL BE ADJUSTABLE.

OUTSIDE AIRFLOW CONTROL: OUTSIDE AIRFLOW SHALL BE MONITORED AT THE ELECTRONIC OUTSIDE AIRFLOW MEASURING STATION. DURING OCCUPIED PERIODS, THE BAS SHALL MODULATE THE OUTSIDE DAMPER AND THEN THE RETURN AIR DAMPER IN SERIES TO MAINTAIN OUTSIDE AIRFLOW SETPOINT.

ECONOMIZER MODE OPERATION: ECONOMIZER MODE SHALL BE ENGAGED WHEN THE O/A ENTHALPY IS FAVORABLE (BELOW THE FIXED LIMIT). THE FAN SHALL BE ENABLED AND FOLLOW THE SEQUENCE AS PREVIOUSLY DESCRIBED, THE O/A DAMPER SHALL FULLY OPEN AND THE CONTROLLER SHALL MODULATE THE O/A AND R/A DAMPERS AND STAGE/MODULATE THE COMPRESSOR(S) AS NECESSARY TO MAINTAIN SPACE TEMPERATURE. UPON SENSING AN UNFAVORABLE O/A ENTHALPY, THE UNIT SHALL RETURN TO NORMAL OPERATION. THE ECONOMIZER MODE SHALL BE DISENGAGED IF THE OUTSIDE AIR TEMPERATURE FALLS BELOW 40 DEGREES.

DUCT STATIC HIGH LIMIT : THE BAS SHALL MONITOR THE MANUAL RESET DUCT STATIC HIGH LIMIT. IF THE DUCT STATIC HIGH LIMIT SWITCH MAKES, THE FAN SHALL BE STOPPED AND REQUIRE RESET BY THE OPERATOR. INITIAL SETPOINT SHALL BE 3.0"W.C.

UNIT STOP: ANYTIME THE UNIT IS COMMANDED TO SHUTDOWN THE OUTSIDE AIR DAMPER SHALL CLOSE, THE RETURN AIR DAMPER SHALL FULLY OPEN, THE COMPRESSORS SHALL BE OFF AND THE SUPPLY FAN SHALL BE OFF.

FILTER STATUS (AUTO RESET): THE BAS SHALL MONITOR THE STATUS OF THE UNIT FILTER BANK VIA DIFFERENTIAL PRESSURE SWITCH AND SHALL ALARM WHEN THE FILTER DIFFERENTIAL PRESSURE EXCEEDS 0.6 IN. W.G.

ALARMS: FAN FAILURE, DE-HUMIDIFICATION SEQUENCE ACTIVE, VFD IN ALARM, DUCT STATIC HIGH LIMIT, HIGH CO2, HIGH SUPPLY AIR TEMPERATURE, DIRTY FILTER.

UNOCCUPIED MODE:
DURING UNOCCUPIED MODE, THE SUPPLY FAN SHALL BE OFF, THE COMPRESSORS SHALL BE OFF, THE OUTSIDE AIR DAMPER SHALL BE CLOSED AND THE RETURN AIR DAMPER SHALL BE OPEN. THE BAS SHALL CONTINUOUSLY MONITOR ZONE TEMPERATURES AND HUMIDITY. THE BAS SHALL OPERATE THE SUPPLY FAN AND COMPRESSORS TO MAINTAIN THE UNOCCUPIED SPACE TEMPERATURE AND HUMIDITY AS REQUIRED. THE OUTSIDE AIR DAMPER SHALL REMAIN CLOSED DURING UNOCCUPIED MODE.

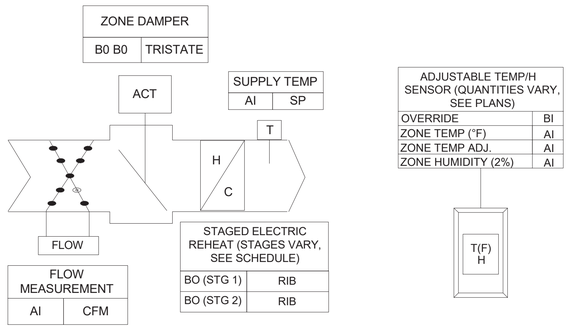

2 VAV TERMINAL UNIT WITH ELECTRIC RE-HEAT CONTROL DIAGRAM

NO SCALE

VAV TERMINAL UNIT SEQUENCE OF OPERATION:

OCCUPIED/UNOCCUPIED SCHEDULE: THE BAS SHALL AUTOMATICALLY CHANGE THE ZONE HEATING AND COOLING SETPOINTS TO FOLLOW THE OCCUPIED AND UNOCCUPIED SCHEDULE AS REQUIRED. THE BAS SHALL START THE AHU/RTU AS NEEDED DURING THE UNOCCUPIED SCHEDULE.

ZONE TEMPERATURE ABOVE SETPOINT (CALL FOR COOLING):ON A RISE IN ZONE TEMPERATURE ABOVE THE COOLING SETPOINT, THE BAS SHALL RESET THE AIR FLOW SETPOINT HIGHER RESULTING IN MODULATION OF THE PRIMARY AIR DAMPER INCREASING AIRFLOW TO THE SPACE.

ZONE TEMPERATURE BELOW SETPOINT (CALL FOR HEATING): ON A FALL IN SPACE TEMPERATURE BELOW SETPOINT, THE TERMINAL UNIT CONTROLLER SHALL RESET THE SUPPLY AIR LOWER, FURTHER CLOSING THE AIR DAMPER, UNTIL SETPOINT IS SATISFIED. ONCE THE SUPPLY AIR DAMPER IS AT MINIMUM POSITION AND THE ZONE TEMPERATURE IS 0.5F BELOW SETPOINT, THE BAS SHALL STAGE/MODULATE (AS APPLICABLE) THE ELECTRIC HEATER TO SATISFY SPACE TEMPERATURE SETPOINT. THE ELECTRIC HEATER SHALL NOT ENERGIZE UNLESS THE PRIMARY AIR DAMPER IS AT THE HEATING AIRFLOW POSITION AND THE PRIMARY SUPPLY AIR FAN IS OPERATING.

MINIMUM AIR FLOW: TERMINAL UNIT DAMPER SHALL NOT CLOSE BELOW MINIMUM AIRFLOW SETTING.

DEHUMIDIFICATION MODE: THE BAS SHALL MONITOR THE ZONE HUMIDITY LEVEL AT ALL TIMES. IF HUMIDITY EXCEEDS 60% RH, THE BAS SHALL OPERATE THE ASSOCIATED AHU/RTU IN DEHUMIDIFICATION MODE AS DESCRIBED IN THE VAV DX SYSTEM SEQUENCE OF OPERATION. THE TERMINAL UNIT PRIMARY AIR DAMPER SHALL OPEN TO COOLING DESIGN AIRFLOW SET POINT AND SPACE TEMPERATURE SHALL BE MAINTAINED BY STAGING/MODLATING THE TERMINAL UNIT ELECTRIC REHEAT. THE BAS SHALL TERMINATE THE DEHUMIDIFICATION MODE WHEN THE HUMIDITY LEVEL REACHES 55%. DURING UNOCCUIPED DEHUMIDIFCATION MODE, THE BAS SHALL UTILIZE OCCUPIED COOLING SET POINTS AND REVERT BACK TO UNOCCUPIED SET POINTS UPON ACHIEVEMENT OF THE DEHUMIDIFICATION SET POINT.

DEADBAND : IF THE ZONE TEMPERATURE IS BETWEEN THE HEATING AND COOLING SETPOINT, THE ZONE ELECTRIC HEAT SHALL BE OFF AND THE PRIMARY AIR DAMPER SHALL BE AT MINIMUM FLOW SETTING.

OVERRIDE: THE TEMPERATURE SENSOR SHALL BE PROVIDED WITH AN OVERRIDE PUSHBUTTON. ONCE THE OVERRIDE PUSHBUTTON IS DEPRESSED THE BAS SHALL OPERATE THE ZONE AT OCCUPIED SETPOINTS FOR 2 HOURS.

ZONE SETPOINT ADJUSTMENT: OCCUPANT SHALL BE ABLE TO ADJUST ZONE TEMPERATURE PLUS OR MINUS 2°F FROM SETPOINT.

ALARMS: ZONE TEMPERATURE (HIGH AND LOW), HIGH SUPPLY AIR TEMPERATURE.

TEXAS PARKS & WILDLIFE

FORD POWELL &CARSON
Architects & Planners, Inc.
Architecture
Planning
Preservation
Interior Design
1138 East Commerce Street
San Antonio, Texas 78205
210/226-1246
FPC# 92705

STATE OF TEXAS
MATTHEW E. BYNUM
122100
LICENSED
PROFESSIONAL ENGINEER
7-3-20
Alderson & Associates, Inc.
F-1008

ALDERSON & ASSOCIATES, INC. MEP ENGINEERING | COMMISSIONING
7700 Torino St, Suite 101
San Antonio, TX 78217
Telephone 210.614.1119
© 2020 Alderson & Associates, Inc. F-1008
PROJECT # 17012

TYLER STATE PARK
HEADQUARTERS REPLACEMENT PHASE 1
PROJECT NUMBER: 112741

DATE: 07/03/2020
DESIGNED BY: MMK
DRAWN BY: MMK
REVIEWED BY: MEB

no.	revision	date

SHEET TITLE
MECHANICAL CONTROLS

SHEET NUMBER
M402

CONSTRUCTION DOCUMENTS

PATH: RIM 360://17-012 Tyler State Park Visitor Center Replacement/17012 Tyler – M19.rvt
DATE: 7/2/2020 3:59:13 PM

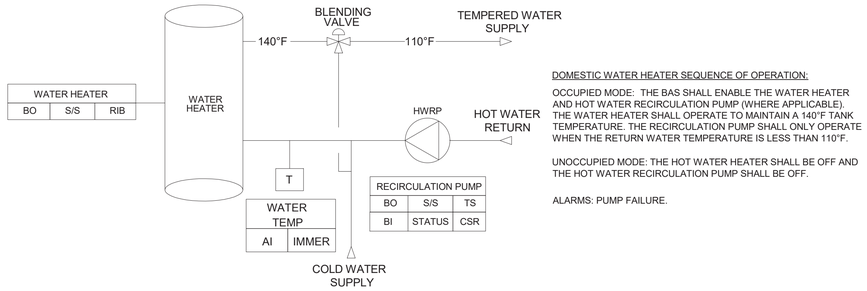

DOMESTIC WATER HEATER SEQUENCE OF OPERATION:

OCCUPIED MODE: THE BAS SHALL ENABLE THE WATER HEATER AND HOT WATER RECIRCULATION PUMP (WHERE APPLICABLE). THE WATER HEATER SHALL OPERATE TO MAINTAIN A 140°F TANK TEMPERATURE. THE RECIRCULATION PUMP SHALL ONLY OPERATE WHEN THE RETURN WATER TEMPERATURE IS LESS THAN 110°F.

UNOCCUPIED MODE: THE HOT WATER HEATER SHALL BE OFF AND THE HOT WATER RECIRCULATION PUMP SHALL BE OFF.

ALARMS: PUMP FAILURE.

1 DOMESTIC WATER HEATING CONTROL DIAGRAM

NO SCALE

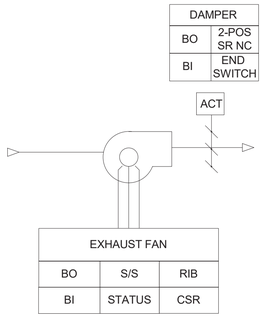

EXHAUST FAN SEQUENCE OF OPERATION:

OCCUPIED MODE: THE BAS SHALL OPEN THE MOTORIZED DAMPER. WHEN THE MOTORIZED DAMPER IS OPEN AS PROVEN BY THE DAMPER POSITION END SWITCH, THE EXHAUST FAN SHALL BE ENERGIZED.

UNOCCUPIED MODE: THE EXHAUST FAN SHALL BE OFF AND THE MOTORIZED DAMPER SHALL BE CLOSED.

THE BAS SHALL CONTINUOUSLY MONITOR THE EXHAUST FAN STATUS VIA CURRENT SENSING RELAY AND GENERATE AN EXHAUST FAN FAILURE ALARM ANYTIME THE EXHAUST FAN IS COMMANDED TO RUN AND IT IS NOT RUNNING. ADDITIONALLY, THE BAS SHALL GENERATE A FAN MISMATCH ALARM IF THE FAN IS RUNNING WHEN THE BAS HAS NOT COMMANDED THE FAN TO RUN.

2 EXHAUST FAN CONTROL DIAGRAM

NO SCALE

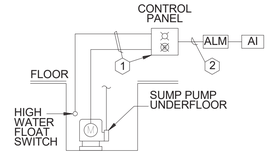

NOTES:

1. PUMP FACTORY CONTROL PANEL AND TERMINATIONS AT PUMP.
2. PROVIDE BAS CONNECTION TO AUXILIARY CONTACTS FOR HIGH WATER LEVEL SIGNAL.

SUMP PUMP MONITORING SEQUENCE OF OPERATION :

A. THE SUMP PUMP SHALL OPERATE ON LOCAL, NON-BAS, FACTORY CONTROLS. MANUFACTURER'S SUMP PUMP CONTROL PANEL SHALL BE LOCATED NEAR THE SUMP PUMP AND SHALL INCLUDE A FLASHING ALARM LIGHT. THE FACTORY ALARM LIGHT SHALL REMAIN ENERGIZED UNTIL, THE SUMP PUMP CONDITION CAUSING THE ALARM IS CORRECTED.

B. DDC CONTROL SCHEDULE:

HIGH WATER ALARM 1 EACH AI PER PUMP

3 SUMP PUMP MONITORING CONTROL DIAGRAM

NO SCALE

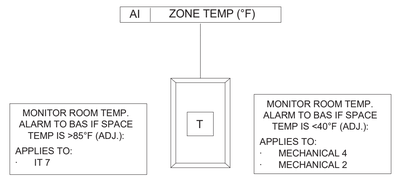

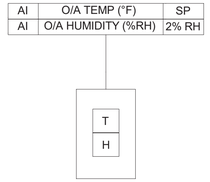

OUTSIDE AIR TEMPERATURE AND HUMIDITY MONITORING (COMBINATION SENSOR)

4 TEMPERATURE STATUS CONTROL DIAGRAM

NO SCALE

TEXAS PARKS & WILDLIFE

FORD POWELL &CARSON
Architects & Planners, Inc.
Architecture
Planning
Preservation
Interior Design
1138 East Commerce Street
San Antonio, Texas 78205
210/226-1246
FPC# 92705

STATE OF TEXAS
MATTHEW E. BYNUM
122100
LICENSED
PROFESSIONAL ENGINEER
7-3-20
Alderson & Associates, Inc.
F-1008

ALDERSON & ASSOCIATES, INC.
MEP ENGINEERING | COMMISSIONING
7700 Torino St, Suite 101
San Antonio, TX 78229
Telephone 210.614.1110
© 2020 Alderson & Associates, Inc. F-1008
PROJECT # 17012

TYLER STATE PARK
HEADQUARTERS REPLACEMENT PHASE 1
PROJECT NUMBER: 112741

DATE: 07/03/2020
DESIGNED BY: MMK
DRAWN BY: MMK
REVIEWED BY: MEB

no.	revision	date

SHEET TITLE
MECHANICAL CONTROLS

SHEET NUMBER
M403

CONSTRUCTION DOCUMENTS

PATH: BIM 360://17-012 Tyler State Park Visitor Center Replacement/17012 Tyler - M19.rvt
DATE: 7/2/2020 3:59:13 PM

ELECTRICAL SYMBOLS AND ABBREVIATIONS

NOTE: NOT ALL SYMBOLS MAY BE USED ON THIS PROJECT. REFER TO SPECIFICATIONS MANUAL FOR ADDITIONAL REQUIREMENTS.

POWER SYMBOLS

- MOTOR, HP AS INDICATED
- CONTROLLER FURNISHED UNDER OTHER DIVISION AND INSTALLED BY DIVISION 26
- DISCONNECT SWITCH
- MAGNETIC MOTOR STARTER
- COMBINATION MOTOR STARTER
- CONTACTOR
- JUNCTION BOX, CEILING MOUNTED
- JUNCTION BOX, WALL MOUNTED
- RELAY
- SIMPLEX RECEPTACLE
- DUPLEX RECEPTACLE
  GFI = GROUND FAULT CIRCUIT INTERRUPTER
  WP = WEATHERPROOF
  IG = ISOLATED GROUND
  XX" = MOUNTING HEIGHT
- DOUBLE DUPLEX (QUADRUPLEX) RECEPTACLE
- FLOOR OUTLET DUPLEX RECEPTACLE
- FLOOR OUTLET SIMPLEX RECEPTACLE
- FLOOR OUTLET QUADRUPLEX RECEPTACLE
- DROP CORD RECEPTACLE
- SPECIAL PURPOSE OUTLET AS DESIGNATED
- SINGLE FACE PEDESTAL
- DOUBLE FACE PEDESTAL RECEPTACLE
- EQUIPMENT CONNECTION
- CONNECT TO EXISTING

LIGHTING CONTROL SYMBOLS

- S_S SINGLE POLE SWITCH, LOWERCASE SUBSCRIPT INDICATES ASSOCIATED CONTROL CIRCUITRY
- S_D DIMMABLE SWITCH
- S_2 DOUBLE POLE SWITCH
- S_3 THREE-WAY SWITCH
- S_4 FOUR-WAY SWITCH
- S_K KEY OPERATED SWITCH
- S_P SWITCH WITH PILOT LIGHT IN HANDLE
  P = PILOT LIGHT, ILLUMINATED WITH LOAD ON
  NL = NIGHT LIGHT, ILLUMINATED WITH LOAD OFF
- S_{WP} WEATHERPROOF SWITCH
- S_M S_{MT} MANUAL MOTOR STARTER
  T = THERMAL OVERLOAD, SIZED FOR MOTOR
- DS DOOR SWITCH
- S_T TIME SWITCH
- S_{SC} SPEED CONTROL
- S_{PB} PUSH BUTTON
- SWITCH, OCCUPANCY SENSOR, WALL MOUNT
- S_{LV} MOMENTARY CONTACT OVERRIDE SWITCH
- OS OCCUPANCY SENSOR, CEILING MOUNTED, DUAL TECHNOLOGY. PROVIDE WITH REQUIRED POWER PACK(S) AND WIRING.
- OCCUPANCY SENSOR WALL MOUNTED, DUAL TECHNOLOGY. PROVIDE WITH REQUIRED POWER PACK(S) AND WIRING.

LIGHTING SYMBOLS

- INCANDESCENT OR HID FIXTURE, CEILING MOUNTED
- INCANDESCENT OR HID FIXTURE, WALL MOUNTED
- FLUORESCENT TROFFER, RECESSED OR SURFACE MOUNTED
- EXIT SIGN - SINGLE FACE
- EXIT SIGN - SINGLE FACE WITH ONE-WAY DIRECTIONAL ARROW
- EXIT SIGN - SINGLE FACE WITH TWO-WAY DIRECTIONAL ARROWS
- EXIT SIGN - DOUBLE FACE
- EXIT SIGN - DOUBLE FACE WITH 2 ONE-WAY DIRECTIONAL ARROWS
- EMERGENCY LIGHT, BATTERY TYPE WITH CHARGER
- EXTERIOR FLOOD LIGHT
- POLE MOUNTED LUMINAIRE (SQUARE)
- POLE MOUNTED LUMINAIRE (ROUND)
- TRACK LIGHT WITH HEADS AS INDICATED
- LC LIGHTING CONTACTOR
- PP POWER PACK

ELECTRICAL RACEWAYS

- CONDUIT CONCEALED IN WALL OR CEILING
- CONDUIT UNDER FLOOR OR UNDERGROUND
- SWITCH LEG
- SURFACE MOUNTED RACEWAY WITH ALL REQUIRED FITTINGS AND HARDWARE. PROVIDE RECEPTACLES AS INDICATED.
- SURFACE MOUNTED RACEWAY RISER SECTION WITH ALL REQUIRED FITTINGS AND HARDWARE
- BUS DUCT WITH TAKE OFF DEVICE
- — UGE — UNDERGROUND ELECTRICAL (APPROXIMATE LOCATION, CONTRACTOR TO VERIFY EXACT LOCATION IN FIELD)
- — UGT — UNDERGROUND TELEPHONE (APPROXIMATE LOCATION, CONTRACTOR TO VERIFY EXACT LOCATION IN FIELD)
- PIA-2,4,6 BRANCH CIRCUIT HOMERUN SUBSCRIPT 'PIA' INDICATES PANEL AND 2,4,6 INDICATES BREAKER POSITION

PANELS AND RELATED EQUIPMENT

- PANELBOARD SURFACE MOUNTED (REFER TO PANEL SCHEDULE)
- PANELBOARD FLUSH MOUNTED (REFER TO PANEL SCHEDULE)
- TRANSFORMER, WITH CONCRETE HOUSEKEEPING PAD (REFER TO ONE-LINE DIAGRAM)
- ATS AUTOMATIC TRANSFER SWITCH (REFER TO ONE-LINE DIAGRAM)

FIRE ALARM SYSTEM SYMBOLS

- FACP FIRE ALARM CONTROL PANEL
- ANN REMOTE ANNUNCIATOR PANEL
- F MANUAL PULL STATION (G=VANDAL PROOF GUARD)
- HORN/STROBE ANNUNCIATOR (G=VANDAL PROOF GUARD)
- STROBE ANNUNCIATOR WALL MOUNTED (G=VANDAL PROOF GUARD)
- SMOKE DETECTOR CEILING MOUNTED
- STROBE ANNUNCIATOR CEILING MOUNTED (G=VANDAL PROOF GUARD)
- SD D SMOKE DETECTOR, DUCT MOUNTED
- HEAT DETECTOR (G=VANDAL PROOF GUARD)
- SMOKE FIRE DAMPER
- AIM FS FLOW SWITCH
- AIM TS TAMPER SWITCH
- AIM PS FIRE SPRINKLER PRESSURE SWITCH
- FS FLOW SWITCH
- MAGNETIC DOOR HOLDER
- H WALL MOUNTED AUDIBLE ANNUNCIATOR (HORN) (G= VANDAL PROOF GUARD, WP=WEATHERPROOF)

TELECOM. / TELEPHONE / DATA SYSTEM SYMBOLS

- PLYWOOD TELEPHONE BACKBOARD
- TELEPHONE OUTLET IN WALL, ROUGH-IN ONLY, 1" CONDUIT TO ABOVE ACCESSIBLE CEILING WITH BUSHINGS AND PULL-STRING UNLESS INDICATED OTHERWISE.
- 2 DATA OUTLET IN WALL, ROUGH-IN ONLY, 1" CONDUIT TO ABOVE ACCESSIBLE CEILING WITH BUSHINGS AND PULL-STRING UNLESS INDICATED OTHERWISE.
- (2) REPRESENTS THE QUANTITY OF PORTS IN OUTLET
- 2 PHONE AND DATA OUTLET IN WALL, ROUGH-IN ONLY, 1" CONDUIT TO ABOVE ACCESSIBLE CEILING WITH BUSHINGS AND PULL-STRING UNLESS INDICATED OTHERWISE.
- FLOOR TELEPHONE AND DATA OUTLET, POKE-THRU TYPE
- T THERMOSTAT
- CABLE TELEVISION OUTLET, ROUGH-IN ONLY. 15" A.F.F. UNLESS INDICATED OTHERWISE.
- FLOOR CABLE TELEVISION OUTLET
- WAP WIRELESS ACCESS POINT
- ANTENNA

ONE-LINE DIAGRAM SYMBOLS

- H-O-A SELECTOR SWITCH
- STOP/START PUSHBUTTON STATION
- LIGHTING ARRESTER AND SURGE CAPACITOR
- TRANSFORMER
- TRANSFORMER (SHIELDED)
- M MOTOR STARTER RELAY AND CONTACTOR
- ETN ELAPSED (RUNNING) TIME METER
- CONTROL POWER TRANSFORMER
- MCP CIRCUIT BREAKER (MOTOR CIRCUIT PROTECTOR)
- DISCONNECT SWITCH
- BUS STAB
- CT CURRENT TRANSFORMER
- MOTOR RESISTANCE TYPE WINDING HEATER
- THERMAL OVERLOAD CIRCUIT
- BREAKER (THERMAL MAGNETIC TYPE)
- FUSE
- CONTACT (NORMALLY OPEN)
- CONTACT (NORMALLY CLOSED)
- PUSHBUTTON (NORMALLY OPEN)
- PUSHBUTTON (NORMALLY CLOSED)
- LIMIT SWITCH (NORMALLY OPEN)
- TIME DELAY CONTACT
- PILOT LIGHT W/COLOR INDICATED (A-AMBER ,G-GREEN ,R-RED)
- S SOLENOID VALVE
- DIFFERENTIAL PRESSURE SWITCH
- AUTOMATIC TRANSFER SWITCH
- DISCONNECT SWITCH 400/3/400AF/N3R INDICATES FRAME SIZE/POLES/FUSE AMPACITY/ENCLOSURE

ABBREVIATIONS

A	AMPERE
AC	ABOVE COUNTER; ALTERNATING CURRENT
A/C	AIR CONDITIONING
AFF	ABOVE FINISHED FLOOR
AFG	ABOVE FINISHED GRADE
AIC	AMPERE INTERRUPTING CAPACITY
BLDG	BUILDING
C	CONDUIT
CAB	CABINET
CKT	CIRCUIT
CONN	CONNECT; CONNECTION
CT	CURRENT TRANSFORMER
DC	DIRECT CURRENT
DIST	DISTRIBUTION
EA	EACH
EF	EXHAUST FAN
ELEC	ELECTRIC; ELECTRICAL
EMER	EMERGENCY
FACP	FIRE ALARM CONTROL PANEL
FLA	FULL LOAD AMPS
FLEX	FLEXIBLE CONDUIT
GFCI	GROUND FAULT CIRCUIT INTERRUPTER
GFI	GROUND FAULT (CIRCUIT) INTERRUPTER
GFPE	GROUND FAULT PROTECTION FOR EQUIPMENT
GND	GROUND
HOA	HAND-OFF-AUTOMATIC
HP	HORSEPOWER
HPS	HIGH PRESSURE SODIUM
HTR	HEATER
HVAC	HIGH VOLUME AIR CONDITIONING
J-BOX	JUNCTION BOX
kVA	KILOVOLT AMPERE
kVAR	KILOVOLT AMPERE REACTIVE
kCM	THOUSAND CIRCULAR MILS
kV	KILOVOLT
kW	KILOWATT
LTG	LIGHTING
MAX	MAXIMUM
MCB	MAIN CIRCUIT BREAKER
MCC	MOTOR CONTROL CENTER
MCP	MOTOR CIRCUIT PROTECTOR
MIN	MINIMUM
MFG	MANUFACTURER
MH	METAL HALIDE
MLO	MAIN LUG ONLY
MSB	MAIN SWITCHBOARD
MTD	MOUNTED
NEC	NATIONAL ELECTRICAL CODE
NTS	NOT TO SCALE
Ø	PHASE
OCPD	OVERCURRENT PROTECTIVE DEVICE
OCFI	OWNER FURNISHED, CONTRACTOR INSTALLED
OL	OVERLOAD
OVHD	OVERHEAD
PA	PUBLIC ADDRESS
SC	SPLIT CIRCUIT
SFD	SMOKE FIRE DAMPER
SW	SWITCH
T/D	TELEPHONE AND DATA
TTB	TELEPHONE TERMINAL BOARD
TYP	TYPICAL
UC	UNDER COUNTER
UG	UNDERGROUND
UNO	UNLESS NOTED OTHERWISE
UON	UNLESS OTHERWISE NOTED
V	VOLTS
W	WATTS
W/	WITH
WP	WEATHERPROOF
XFMR	TRANSFORMER
XFER	TRANSFER

GENERAL NOTES (APPLIES TO ALL SHEETS)

1. COMPLETE WORK IN ACCORDANCE WITH APPLICABLE CODES, ORDINANCES, AND INTERPRETATIONS OF AHJ.
2. COORDINATE WORK WITH OTHER TRADES AS REQUIRED TO PROVIDE COMPLETE SYSTEMS AND AVOID CONFLICTS.
3. MOUNT LIGHT SWITCHES AT 44" AFF, AS MEASURED FROM BOTTOM OF BOX.
4. MOUNT RECEPTACLES AND DATA OUTLETS AT 18" AFF, AS MEASURED FROM BOTTOM OF BOX, EXCEPT WHERE ALTERNATIVE HEIGHT IS INDICATED.
5. MOUNT RECEPTACLES AND DATA OUTLETS DESIGNATED "AC" (ABOVE COUNTER) 3" ABOVE BACK SPLASH, AS MEASURED FROM BOTTOM OF BOX.
6. SUPPORT FIXTURES IN LAY-IN GRID CEILINGS INDEPENDENTLY OF GRID BY A MINIMUM OF FOUR #9 GALVANIZED WIRES ATTACHED TO THE FIXTURE AT EACH CORNER.
7. COORDINATE INSTALLATION OF ELECTRICAL WORK ABOVE THE CEILING TO PROVIDE THE GREATEST POSSIBLE CLEARANCE FOR PLUMBING AND MECHANICAL EQUIPMENT, BOTH CURRENT AND FUTURE. ROUTE CONDUITS TIGHTS TO STRUCTURE OR THROUGH STRUCTURAL TRUSSES WHEREVER POSSIBLE.
8. COORDINATE LOCATIONS OF SWITCHES, RECEPTACLES, AND DATA OUTLETS WITH FURNITURE AND CASEWORK PRIOR TO COMMENCING DEVICE ROUGH-IN TO AVOID CONFLICTS.
9. COORDINATE LOCATION OF DISCONNECT SWITCHES TO ENSURE THAT ALL NEC MINIMUM WORKING CLEARANCES ARE MAINTAINED.
10. SINGLE HOMERUNS ARE SHOWN FOR CIRCUIT IDENTIFICATION ONLY. CIRCUITS MAY BE GROUPED UP TO THREE (3) PHASE CONDUCTORS PER RACEWAY, UNLESS NOTED OTHERWISE.
11. MULTI-WIRED (SHARED NEUTRAL) BRANCH CIRCUITS SHALL NOT BE INSTALLED. PROVIDE DEDICATED NEUTRAL CONDUCTORS FOR ALL SINGLE-PHASE BRANCH CIRCUITS.
12. HOMERUNS AND RUNS BETWEEN JUNCTION BOXES SHALL BE MINIMUM OF 3/4" CONDUIT AND SHALL INCLUDE #10 (MINIMUM) CONDUCTORS AND INSULATED GREEN GROUNDING CONDUCTOR. CIRCUIT SHALL EXTEND FROM OCPD TO A JUNCTION BOX IN THE AREA OF THE RECEPTACLES OR UTILIZATION EQUIPMENT. DROPS TO INDIVIDUAL 20-AMP WIRING DEVICES SHALL INCLUDE #12 (MINIMUM) CONDUCTORS.
13. VOLTAGE DROP TO LAST DEVICE ON BRANCH CIRCUITS SHALL NOT EXCEED 3 PERCENT FROM PANEL. INCREASE BRANCH CIRCUIT CONDUCTOR SIZES AS REQUIRED TO ALLOW FOR CIRCUIT LENGTH.
14. DO NOT LOCATE JUNCTION BOXES ABOVE HARD CEILINGS. ALL CONNECTIONS TO FIXTURES IN A HARD CEILING WILL COME FROM A JUNCTION BOX LOCATED IN AN ACCESSIBLE AREA OUTSIDE OF THE ROOM.
15. FIXTURES SHALL NOT BE DAISY CHAINED TOGETHER. EACH FIXTURE SHALL HAVE ONLY ONE FLEXIBLE CONDUIT CONNECTION FROM A JUNCTION BOX LOCATED WITHIN 6 FEET.
16. FMC SHALL BE USED FOR FINAL CONNECTIONS TO LIGHT FIXTURES, IN RUNS UP TO 6 FEET LONG.
17. FMC OR LFMC SHALL BE USED FOR CONNECTIONS TO VIBRATION PRODUCING EQUIPMENT, SUCH AS MOTORS, TRANSFORMERS, AND HVAC EQUIPMENT. LFMC SHALL BE USED IN DAMP AND WET LOCATIONS.
18. TERMINATED DATA CONDUITS, SLEEVES AND STUBS WITH PLASTIC BUSHINGS.
19. FEEDER AND BRANCH CIRCUIT WIRING SHALL BE COPPER.
20. LIGHT FIXTURES, WIRING DEVICES, AND EQUIPMENT SHALL BE LISTED AND LABELED BY A NRTL.
21. PROVIDE UL LISTED FIRE STOP SYSTEMS AT ALL PENETRATIONS THROUGH RATED PARTITIONS.
22. MARK JUNCTION BOX COVERS USING PERMANENT MARKER INDICATING THE PANEL AND CIRCUIT NUMBERS SERVING THE JUNCTION BOX.
23. MARK SWITCH AND RECEPTACLE COVERPLATES USING APPROVED LABEL MAKER INDICATING THE PANEL AND CIRCUIT NUMBERS SERVING THE SWITCH(ES).
24. PROVIDE CEILING ACCESS DOORS TO GAIN ACCESS TO EQUIPMENT ABOVE HARD CEILINGS.
25. CIRCUIT EXIT SIGNS, EMERGENCY EGRESS FIXTURES, AND EMERGENCY BALLASTS TO LIGHTING CIRCUIT IN THE SPACE AND CIRCUIT AHEAD OF CONTROL DEVICES.
26. CIRCUIT EXTERIOR LIGHTS THROUGH PHOTOCELL/TIMECLOCK-CONTROLLED LIGHTING CONTACTOR.
27. ROUTE CONDUIT FROM DATA OUTLET TO AREA ABOVE ACCESSIBLE CEILING.
28. COMMUNICATION CABLES SHALL BE PLENUM RATED.
29. DO NOT INSTALL COMMUNICATION CABLES PARALLEL TO ELECTRICAL CONDUITS. CROSS ELECTRICAL CONDUITS WITH COMMUNICATION CABLES AT 90-DEGREE ANGLE.
30. COMMUNICATION BACK BOXES SHALL BE 4-INCH SQUARE, STEEL WITH SINGLE-GANG RING.
31. COMMUNICATION CONDUITS SHALL BE 1" MINIMUM.
32. PROJECTOR CEILING PLATES: OWNER-PROVIDED; CONTRACTOR-INSTALLED. INSTALLED IN ACCORDANCE WITH MANUFACTURER'S WRITTEN INSTALLATION INSTRUCTIONS.
33. PROVIDE PHENOLIC LABELS FOR ALL DISTRIBUTION EQUIPMENT, PANELBOARDS, AND DISCONNECT SWITCHES. LABELS SHALL BE BLACK, ETCHED TO REVEAL WHITE LETTERS ON BLACK BACKGROUND.
34. COORDINATE WORK IN THE CONSTRUCTION AREAS WITH OWNER, TO AVOID CONFLICT WITH OTHER ACTIVITIES OR FUNCTIONS THAT REQUIRE ACCESS TO THE AREA.
35. REQUEST UTILITY LOCATING SERVICE TO IDENTIFY ALL UNDERGROUND UTILITIES IN THE VICINITY OF UNDERGROUND WORK. VERIFY WITH UTILITY LOCATING SERVICE THAT MARKING IS COMPLETE PRIOR TO COMMENCING WORK.
36. PROVIDE AND PLACE TEMPORARY BARRIERS, WARNING CONES, AND OTHER SUITABLE DEVICES TO PROTECT THE PUBLIC FROM HAZARDS PRESENTED BY THE WORK, INCLUDING, BUT NOT LIMITED TO, THE FOLLOWING: STORAGE OF MATERIALS AND EQUIPMENT, OPERATION OF TRENCHING EQUIPMENT AND MOTOR VEHICLES, OPEN TRENCHES AND POLE BASE CORE DRILLS, EXCAVATED MATERIAL, AND CONCRETE DELIVERY.

LIGHTING FUNCTIONAL TESTING AND COMMISSIONING PLAN (APPLIES TO ALL SHEETS)

1. CONTRACTOR SHALL ENGAGE A 3RD PARTY CERTIFIED COMMISSIONING AGENT TO COMPLETE THE TASKS BELOW TO VERIFY THE LIGHTING CONTROLS ARE OPERATING AS PRESCRIBED BY THE PROJECT DOCUMENTS AND APPLICABLE CODES. WRITTEN DOCUMENTATION SHALL BE PROVIDED TO THE ARCHITECT UPON COMPLETION AND SHALL INCLUDE THE FOLLOWING INFORMATION FOR EACH TASK: DATE PERFORMED, PERSON COMPLETING THE TASK, INITIAL SETTINGS OBSERVED, AND FINAL SETTING UPON COMPLETION.
2. CONTRACTOR SHALL COMPLETE AND DOCUMENT THE FOLLOWING TASKS:
   A.ENSURE LIGHT FIXTURES ARE INSTALLED AND OPERATIONAL.
   B.PERFORM OPERATIONAL TESTING OF EMERGENCY EXIT AND EGRESS LIGHTING COMPONENTS AS REQUIRED BY NFPA 101 FOR ANNUAL TESTING.
   C.ENSURE OCCUPANCY SENSORS ARE INSTALLED AND OPERATIONAL.
   D.ENSURE DAYLIGHT PHOTOSENSORS ARE INSTALLED AND OPERATIONAL.
3. TEST OF OCCUPANCY SENSOR DEVICES SHALL ENSURE THE FOLLOWING:
   A.LOCATION AND AIMING ARE SET PER MANUFACTURER'S INSTRUCTIONS,
   B.DEVICE STATUS INDICATORS ARE FUNCTIONING,
   C.FIXTURES ARE SWITCHED OR DIMMED AS INDICATED IN THE DRAWINGS,
   D.TIME DELAYS ARE SET APPROPRIATELY, AND
   E.MOVEMENT OUTSIDE OF THE SPACE DOES NOT CAUSE THE SENSOR TO OPERATE.
4. TEST OF DAYLIGHT PHOTOSENSOR DEVICES SHALL ENSURE THE FOLLOWING:
   A.LOCATION AND AIMING ARE SET PER MANUFACTURER'S INSTRUCTIONS,
   B.DEVICE STATUS INDICATORS ARE FUNCTIONING,
   C.FIXTURES ARE DIMMED AS INDICATED IN THE DRAWINGS,
   D.TIME DELAYS AND RATE OF DIMMING ARE SET APPROPRIATELY TO AVOID ABRUPT LIGHT LEVEL CHANGES, AND
   E.FEEDBACK FROM ARTIFICIAL LIGHTING WITHIN THE SPACE DOES NOT CAUSE UNNECESSARY OPERATION.
5. IN CORRIDOR, OCCUPANCY SENSOR CONTROL SHALL TURN LIGHTING ON TO FULL LIGHT OUTPUT UPON DETECTION OF OCCUPANT. ALL OTHER AREAS, OCCUPANCY SENSOR CONTROL SHALL TURN LIGHTING ON TO NOT MORE THAN 50 PERCENT OF LIGHTING POWER OR BE MANUAL ON.
6. TEST ON/OFF SYSTEM WHERE APPLICABLE FOR CORRECT OPERATION.
7. CONTRACTOR SHALL ENSURE THE STEPS ABOVE ARE COMPLETED PRIOR TO SUBSTANTIAL COMPLETION TO AVOID POTENTIAL DELAYS IN OBTAINING CERTIFICATE OF OCCUPANCY. CONTRACTOR SHALL PROVIDE ALL DOCUMENTATION AS REQUIRED BY THE AHJ TO SATISFY ALL PERMITTING OBLIGATIONS.

TEXAS PARKS & WILDLIFE

FORD POWELL & CARSON
Architects & Planners, Inc.
Architecture
Planning
Preservation
Interior Design
1138 East Commerce Street
San Antonio, Texas 78205
210/226-1246
FPC# 92705

7/2/20 STATE OF TEXAS RYAN A. ROYAL 94773 LICENSED PROFESSIONAL ENGINEER

Alderson & Associates, Inc. F-1008

ALDERSON & ASSOCIATES, INC. MEP ENGINEERING | COMMISSIONING
7700 Torino St, Suite 101
San Antonio, TX 78250
Telephone: 210.614.1110

© 2020 Alderson & Associates, Inc. F-1008

PROJECT # 17012

TYLER STATE PARK
HEADQUARTERS PHASE 1
PROJECT NUMBER: 112741

DATE: 07/03/2020
DESIGNED BY: LE
DRAWN BY: LE
REVIEWED BY: RAR

no.	revision	date

SHEET TITLE
ELECTRICAL SYMBOLS & ABBREVIATIONS

SHEET NUMBER
E001

CONSTRUCTION DOCUMENTS

PATH: BIM 360:/17-012 Tyler State Park Visitor Center Replacement/17012 Tyler - E19.rvt
DATE: 7/2/2020 5:17:22 PM

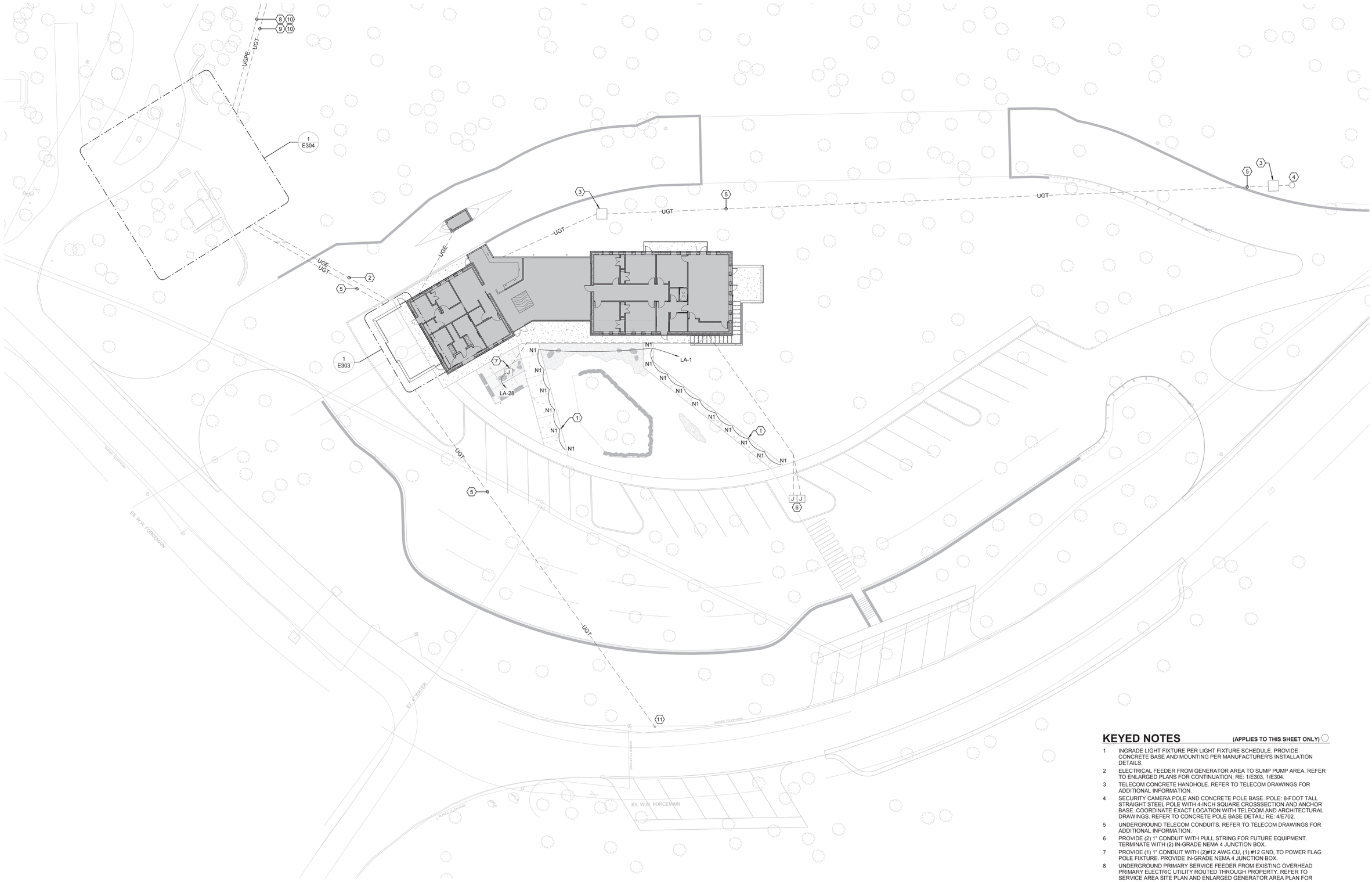

N TRUE NORTH

1 ELECTRICAL SITE PLAN

SCALE: 1" = 20'-0"

KEYED NOTES (APPLIES TO THIS SHEET ONLY)

1. INGRADE LIGHT FIXTURE PER LIGHT FIXTURE SCHEDULE. PROVIDE CONCRETE BASE AND MOUNTING PER MANUFACTURER'S INSTALLATION DETAILS.
2. ELECTRICAL FEEDER FROM GENERATOR AREA TO SUMP PUMP AREA. REFER TO ENLARGED PLANS FOR CONTINUATION; RE: 1/E303, 1/E304.
3. TELECOM CONCRETE HANDHOLE. REFER TO TELECOM DRAWINGS FOR ADDITIONAL INFORMATION.
4. SECURITY CAMERA POLE AND CONCRETE POLE BASE. POLE: 8-FOOT TALL STRAIGHT STEEL POLE WITH 4-INCH SQUARE CROSSSECTION AND ANCHOR BASE. COORDINATE EXACT LOCATION WITH TELECOM AND ARCHITECTURAL DRAWINGS. REFER TO CONCRETE POLE BASE DETAIL; RE: 4/E702.
5. UNDERGROUND TELECOM CONDUITS. REFER TO TELECOM DRAWINGS FOR ADDITIONAL INFORMATION.
6. PROVIDE (2) 1" CONDUIT WITH PULL STRING FOR FUTURE EQUIPMENT. TERMINATE WITH (2) IN-GRADE NEMA 4 JUNCTION BOX.
7. PROVIDE (1) 1" CONDUIT WITH (2)#12 AWG CU, (1) #12 GND, TO POWER FLAG POLE FIXTURE. PROVIDE IN-GRADE NEMA 4 JUNCTION BOX.
8. UNDERGROUND PRIMARY SERVICE FEEDER FROM EXISTING OVERHEAD PRIMARY ELECTRIC UTILITY ROUTED THROUGH PROPERTY. REFER TO SERVICE AREA SITE PLAN AND ENLARGED GENERATOR AREA PLAN FOR CONTINUATION; RE: 1/E102, 1/E304. REFER TO ELECTRICAL ONE-LINE DIAGRAM FOR FEEDER SIZE; RE: E501.
9. PROVIDE (2) 4" EMPTY CONDUITS ROUTED ALONG SAME PATH WITH UNDERGROUND PRIMARY SERVICE FEEDER. REFER TO TELECOM DRAWINGS FOR ADDITIONAL INFORMATION.
10. COORDINATE EXACT ROUTING OF UNDERGROUND DUCTBANK AND ASSOCIATED 20-FOOT WIDE EASEMENT WITH INF SURVEY GROUP. REMOVE TREES AS DESIGNATED BY INF SURVEY GROUP AND TPWD WITHIN EASEMENT.
11. EXISTING TELECOM PEDESTAL. COORDINATE ROUTING AT THE SITE WITH EXACT LOCATION OF PEDESTAL.

TEXAS PARKS & WILDLIFE

FORD POWELL &CARSON
Architects & Planners, Inc.
Architecture
Planning
Preservation
Interior Design
1138 East Commerce Street
San Antonio, Texas 78205
210/226-1246
FPC# 92705

7/2/20
STATE OF TEXAS
RYAN A. ROYAL
94773
LICENSED
PROFESSIONAL ENGINEER
Alderson & Associates, Inc.
F-1008

ALDERSON & ASSOCIATES, INC. MEP ENGINEERING | COMMISSIONING
7700 Torino St, Suite 101
San Antonio, TX 78229
Telephone: 210.614.1110
© 2020 Alderson & Associates, Inc. F-1008

PROJECT # 17012

TYLER STATE PARK
HEADQUARTERS PHASE 1
PROJECT NUMBER: 112741

DATE: 07/03/2020
DESIGNED BY: LE
DRAWN BY: LE
REVIEWED BY: RAR

no.	revision	date

SHEET TITLE
ELECTRICAL SITE PLAN

SHEET NUMBER
E101

CONSTRUCTION DOCUMENTS

DATE: 7/2/2020 5:17:24 PM
PATH: RIM 360://17-012 Tyler State Park Visitor Center Replacement/17012 Tyler - E19.rvt



KEYED NOTES (APPLIES TO THIS SHEET ONLY)

1. EXISTING OVERHEAD PRIMARY ELECTRIC UTILITY, FROM ONCOR. COORDINATE WITH EXACT LOCATION OF POWERPOLES AT THE SITE.
2. APPROXIMATE LOCATION OF EXISTING POWER POLE FOR OVERHEAD PRIMARY ELECTRIC UTILITY. ROUTE NEW UNDERGROUND PRIMARY DUCTBANK AND TELECOM CONDUITS TO POLE. COORDINATE INSTALLATION WITH UTILITY STANDARDS.
3. PROVIDE (2) 4" CONDUITS FOR PRIMARY CONDUCTOR INSTALLATION BY ELECTRIC UTILITY COMPANY AND PROVIDE (2) 4" CONDUITS FOR INSTALLATION OF TELECOM SERVICE CABLING. CONDUITS SHALL BE INSTALLED BY BORING AROUND PERMIMETER OF CAMPING AREA, APPROXIMATELY AS SHOWN, AND SHALL BE CONCRETE ENCASED. MAINTAIN SEPARATION BETWEEN POWER AND TELECOM DUCTBANKS PER UTILITY STANDARDS. VERIFY FINAL LENGTH REQUIRED PRIOR TO BID.
4. PROVIDE CONDUITS FOR FEEDER TO DIST PANEL 'MDP' AND PROVIDE (2) 4" CONDUITS FOR INSTALLATION OF TELECOM SERVICE CABLING. CONDUITS SHALL BE INSTALLED BY BORING FROM GENERATOR SERVICE AREA TO BUILDING, APPROXIMATELY AS SHOWN. MAINTAIN MINIMUM 24-INCH SEPARATION BETWEEN POWER AND TELECOM DUCTBANKS.

N

TRUE NORTH

1 ELECTRICAL SITE PLAN - OVERALL

SCALE: 1" = 20'-0"

DATE: 7/2/2020 5:17:25 PM PATH: RIM 360://17-012 Tyler State Park Visitor Center Replacement/17012 Tyler - E19.rvt

TEXAS PARKS & WILDLIFE

FORD POWELL &CARSON
Architects & Planners, Inc.
Architecture
Planning
Preservation
Interior Design
1138 East Commerce Street
San Antonio, Texas 78205
210/226-1246
FPC# 92705

7/2/20

STATE OF TEXAS
RYAN A. ROYAL
94773
LICENSED
PROFESSIONAL ENGINEER

Alderson & Associates, Inc.
F-1008

ALDERSON & ASSOCIATES, INC
MEP ENGINEERING | COMMISSIONING
7700 Torino St, Suite 101
San Antonio, TX 78229
Telephone: 210.614.1110

© 2020 Alderson & Associates, Inc. F-1008

PROJECT # 17012

TYLER STATE PARK
HEADQUARTERS PHASE 1
PROJECT NUMBER: 112741

DATE: 07/03/2020
DESIGNED BY: Designer
DRAWN BY: Author
REVIEWED BY: Checker

no.	revision	date

SHEET TITLE
ELECTRICAL SITE PLAN - OVERALL

SHEET NUMBER
E102

CONSTRUCTION DOCUMENTS

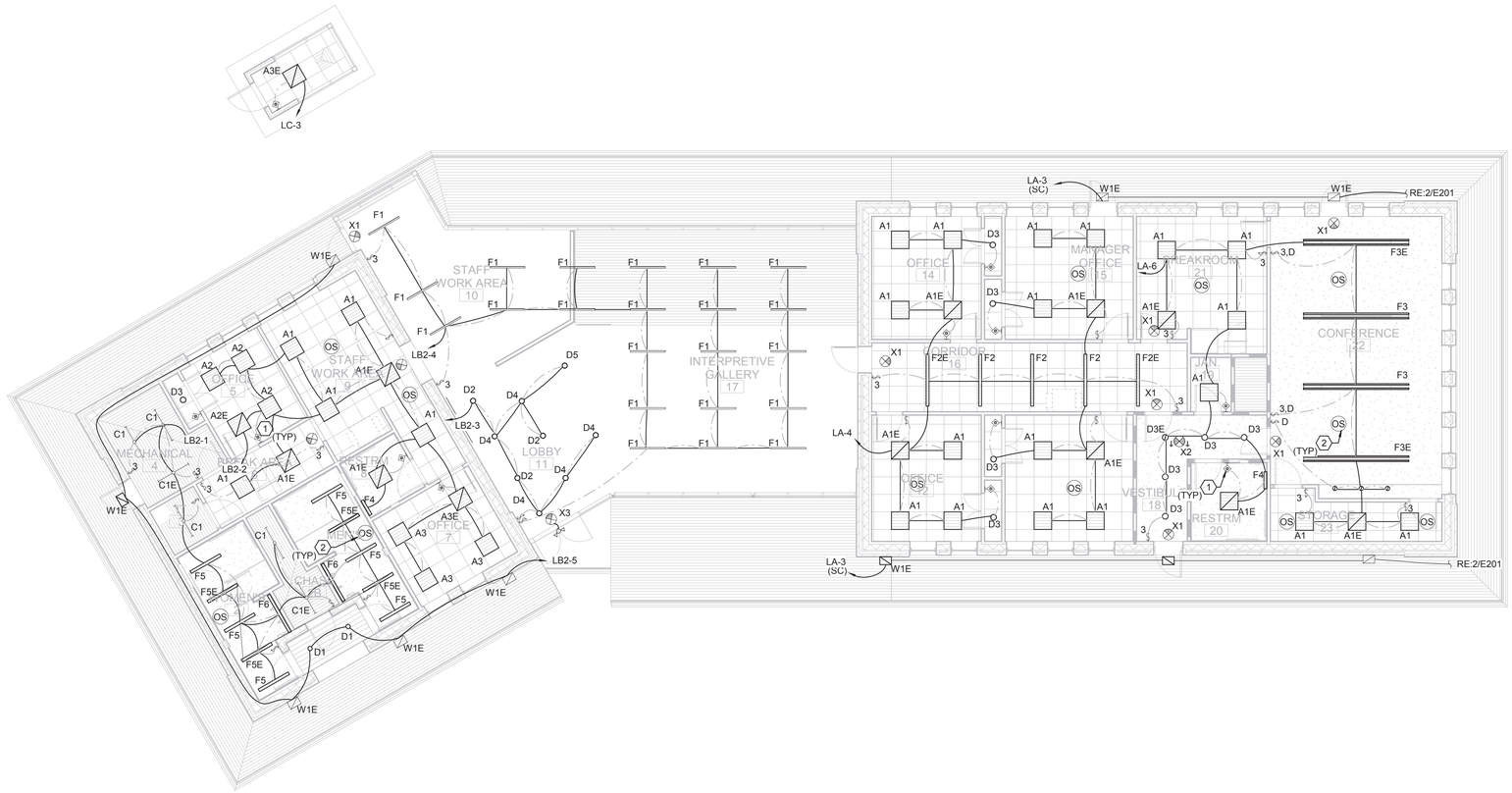

1 FIRST FLOOR PLAN - LIGHTING

SCALE: 1/8" = 1'-0"

TRUE NORTH

KEYED NOTES (APPLIES TO THIS SHEET ONLY)

1 PROVIDE DUAL TECH WALL SENSOR SWITCH WITH 'MANUAL ON' OPERATION EQUAL TO GREENGATE #ONW-D-1001-MV-XX. PROVIDE FINISH PER SPECIFIACTIONS.

2 PROVIDE DUAL TECHNOLOGY OCCUPANCY SENSOR EQUAL TO GREENGATE #OAC-DT-100-R. SENSOR TO HAVE 'MANUAL ON' FUNCTION. PROVIDE ALL POWER PACK, RELAYS, ETC. FOR A COMPLETE SYSTEM INSTALLATION.

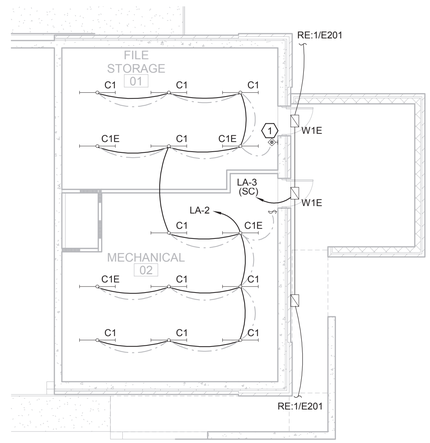

2 BASEMENT FLOOR PLAN - LIGHTING

SCALE: 1/8" = 1'-0"

TRUE NORTH

TEXAS PARKS & WILDLIFE

FORD POWELL &CARSON
Architects & Planners, Inc.
Architecture
Planning
Preservation
Interior Design
1138 East Commerce Street
San Antonio, Texas 78205
210/226-1246
FPC# 92705

7/2/20 STATE OF TEXAS RYAN A. ROYAL 94773 LICENSED PROFESSIONAL ENGINEER
Alderson & Associates, Inc. F-1008

ALDERSON & ASSOCIATES, INC. MEP ENGINEERING | COMMISSIONING
7700 Torino St, Suite 101
San Antonio, TX 78229
Telephone: 210.614.1110
© 2020 Alderson & Associates, Inc. F-1008

PROJECT # 17012

TYLER STATE PARK
HEADQUARTERS PHASE 1
PROJECT NUMBER: 112741

DATE: 07/03/2020
DESIGNED BY: LE
DRAWN BY: LE
REVIEWED BY: RAR

no.	revision	date

SHEET TITLE
LIGHTING FLOOR PLAN

SHEET NUMBER
E201

CONSTRUCTION DOCUMENTS

DATE: 7/2/2020 5:17:28 PM PATH: RIM 360://17-012 Tyler State Park Visitor Center Replacement/17012 Tyler - E19.rvt

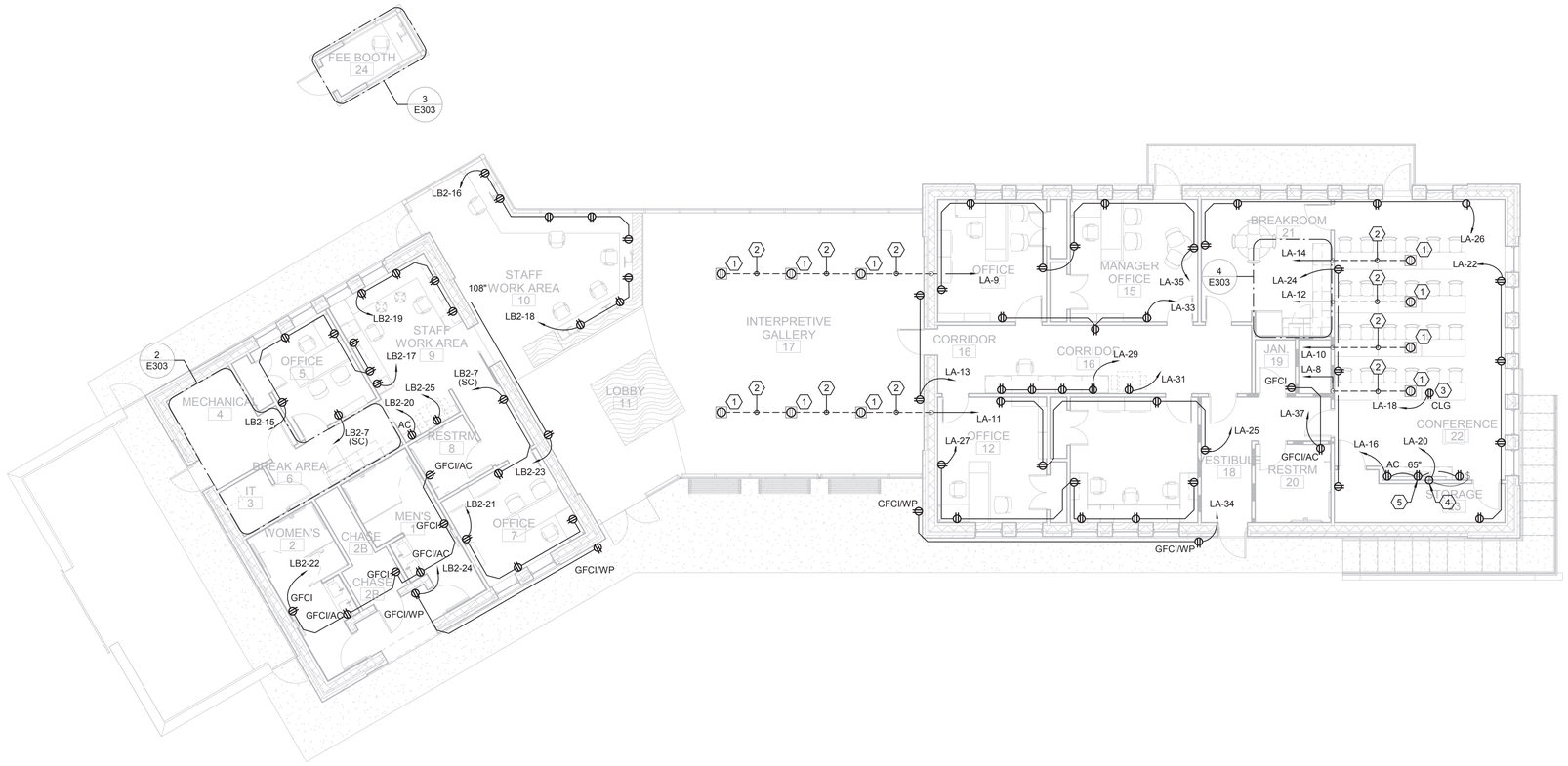

1 FIRST FLOOR PLAN - POWER

SCALE: 1/8" = 1'-0"

TRUE NORTH

KEYED NOTES (APPLIES TO THIS SHEET ONLY)

1. PROVIDE FLOOR BOX EQUAL TO LEGRAND MODEL #RFB2E. PROVIDE IN SLAB-FLOOR BOX WITH SEGREGATED POWER AND DATA COMPARMENTS, SUITABLE FOR CONDUIT SIZES INDICATED. PROVIDE ONE (1) 20A, 120V DUPLEX RECEPTACLES FOR POWER, WITH CAPACITY FOR ONE (1) CAT6 CABLE CONNECTIONS IN DATA SIDE. PROVIDE ALL APPURTENANCES NECESSARY FOR A COMPLETE SYSTEM INSTALLATION.
2. INSTALL (2) 1-1/4" CONDUITS, FOR POWER (1 CONDUIT) AND SPECIAL SYSTEM CABLING (1 CONDUIT). VERIFY EXACT LOCATION WITH ARCHITECT PRIOR TO ROUGH-IN. COORDINATE INSTALLATION WITH STRUCTURAL ENGINEER.
3. PROVIDE CEILING MOUNTED RECEPTACLE TO POWER PROJECTOR. VERIFY EXACT LOCATION WITH OWNER PRIOR TO ROUGH-IN.
4. PROVIDE POWER TO MOTORIZED PROJECTOR SCREEN. PROVIDE ALL APPURTENANCES NECESSARY FOR A COMPLETE FUNCTIONAL SYSTEM.
5. PROVIDE POWER TO TV. VERIFY EXACT HEIGHT AND EXACT LOCATION WITH ARCHITECT PRIOR TO ROUGH-IN.

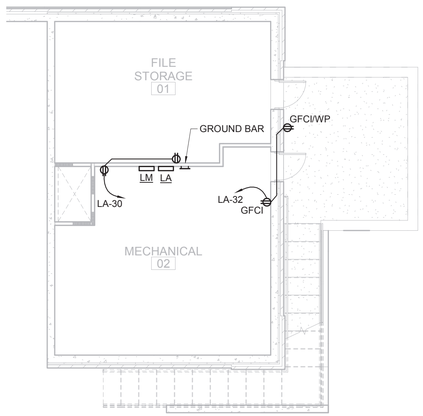

2 BASEMENT FLOOR PLAN - POWER

SCALE: 1/8" = 1'-0"

TRUE NORTH

TEXAS PARKS & WILDLIFE

FORD POWELL &CARSON
Architects & Planners, Inc.
Architecture
Planning
Preservation
Interior Design
1138 East Commerce Street
San Antonio, Texas 78205
210/226-1246
FPC# 92705

7/2/20
STATE OF TEXAS
RYAN A. ROYAL
94773
LICENSED
PROFESSIONAL ENGINEER
Alderson & Associates, Inc.
F-1008

ALDERSON & ASSOCIATES, INC. MEP ENGINEERING | COMMISSIONING
7700 Torino St, Suite 101
San Antonio, TX 78229
Telephone: 210.614.1110
© 2020 Alderson & Associates, Inc. F-1008
PROJECT # 17012

TYLER STATE PARK
HEADQUARTERS PHASE 1
PROJECT NUMBER: 112741

DATE: 07/03/2020
DESIGNED BY: LE
DRAWN BY: LE
REVIEWED BY: RAR

no.	revision	date

SHEET TITLE
POWER FLOOR PLAN

SHEET NUMBER
E301

CONSTRUCTION DOCUMENTS

DATE: 7/2/2020 5:17:30 PM PATH: RIM 360://17-012 Tyler State Park Visitor Center Replacement/17012 Tyler - E19.rvt

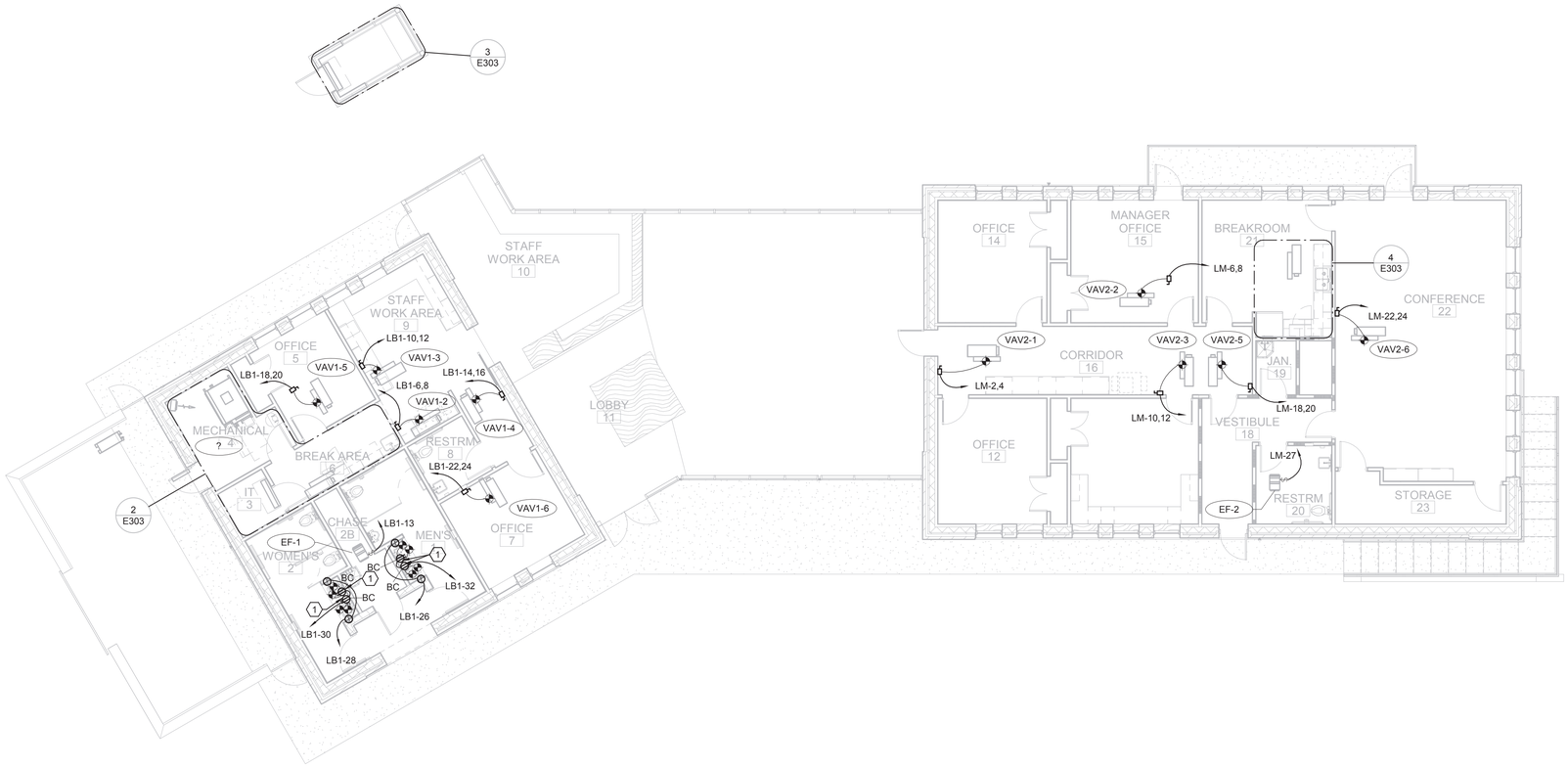

1 FIRST FLOOR PLAN - POWER (MECH. EQUIP.)

SCALE: 1/8" = 1'-0"

TRUE NORTH

KEYED NOTES (APPLIES TO THIS SHEET ONLY)

1 PROVIDE LOW-VOLTAGE CABLING AND EQUIPMENT CONNECTION TO SOAP DISPENSERS AND AUTOMATIC LAVATORIES. COORDINATE WITH MANUFACTURER'S INSTALLATION INSTRUCTIONS.

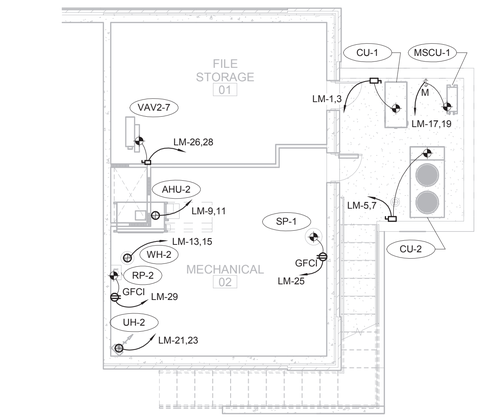

2 BASEMENT FLOOR PLAN - POWER (MECH. EQUIP.)

SCALE: 1/8" = 1'-0"

TRUE NORTH

TEXAS PARKS & WILDLIFE

FORD POWELL &CARSON
Architects & Planners, Inc.
Architecture
Planning
Preservation
Interior Design
1138 East Commerce Street
San Antonio, Texas 78205
210/226-1246
FPC# 92705

7/2/20
STATE OF TEXAS
RYAN A. ROYAL
94773
LICENSED
PROFESSIONAL ENGINEER
Alderson & Associates, Inc.
F-1008

ALDERSON & ASSOCIATES, INC.
MEP ENGINEERING | COMMISSIONING
7700 Torino St. Suite 101
San Antonio, TX 78229
Telephone: 210.614.1110
© 2020 Alderson & Associates, Inc. F-1008

PROJECT # 17012

TYLER STATE PARK
HEADQUARTERS PHASE 1
PROJECT NUMBER: 112741

DATE: 07/03/2020
DESIGNED BY: LE
DRAWN BY: LE
REVIEWED BY: RAR

no.	revision	date

SHEET TITLE
MECH. EQUIP. POWER FLOOR PLAN

SHEET NUMBER
E302

CONSTRUCTION DOCUMENTS

DATE: 7/2/2020 5:17:36 PM PATH: RIM 360://17-012 Tyler State Park Visitor Center Replacement/17012 Tyler - E19.rvt

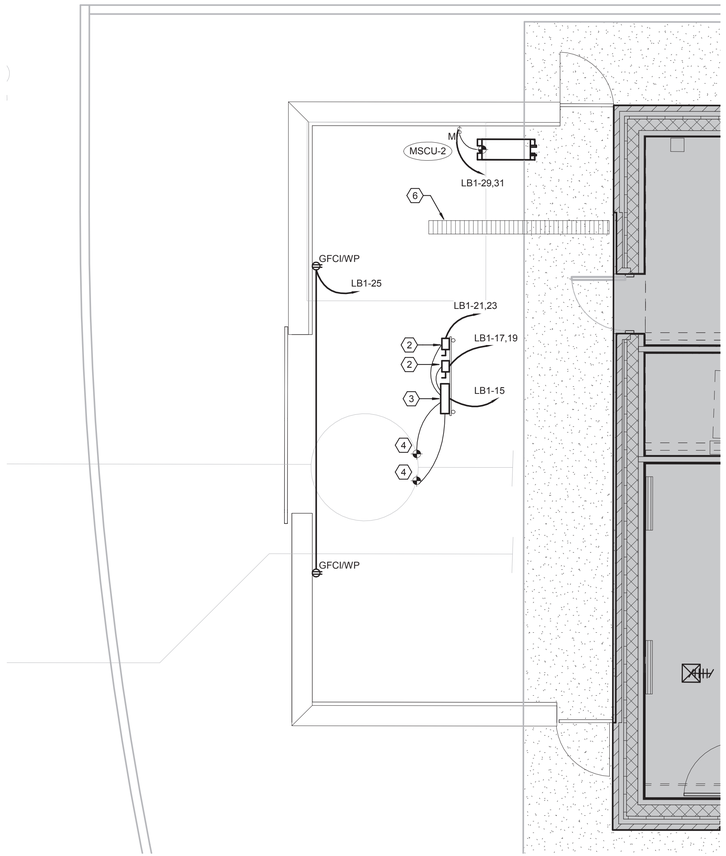

1 ENLARGED SUMP PUMP AREA - POWER
SCALE: 1/4" = 1'-0"
TRUE NORTH

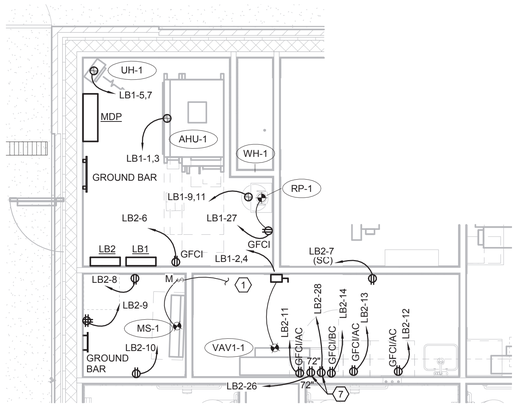

2 PARTIAL FLOOR PLAN - IT, MECH, BREAK ROOMS - POWER
SCALE: 1/4" = 1'-0"
TRUE NORTH

KEYED NOTES (APPLIES TO THIS SHEET ONLY)

1. HOMERUN THROUGH ASSOCIATED CONDENSING UNIT IN MECHANICAL YARD; RE: 2/E302. PROVIDE BRANCH CIRCUIT AND CONTROL WIRING PER MANUFACTURER'S WRITTEN INSTRUCTIONS.
2. DISCONNECT SWITCH: 30-AMP, 2-POLE, NON-FUSED, 240-VOLT, NEMA 3R, HEAVY-DUTY SWITCH. MOUNT TO ELECTRICAL RACK STRUCTURE PER LIFT STATION DETAILS.
3. LIFT STATION CONTROL PANEL PER CIVIL DRAWINGS AND SPECIFICATIONS. CIRCUIT SUMP PUMPS THROUGH CONTROL PANEL PER LIFT STATION DETAILS.
4. EQUIPMENT CONNECTION TO LIFT STATION SUMP PUMPS. CONNECT AT BOTTOM OF PIT PER LIFT STATION DETAILS.
5. HOMERUN THROUGH ASSOCIATED CONDENSING UNIT IN RADIO TOWER YARD; RE: 1/E303. PROVIDE BRANCH CIRCUIT AND CONTROL WIRING PER MANUFACTURER'S WRITTEN INSTRUCTIONS.
6. PROVIDE ICE-BRIDGE FOR ROUTING OF CONDUITS FROM RADIO TOWER TO BUILDING. MOUNT BRIDGE AT 8'-0". VERIFY EXACT HEIGHT AND EXACT LOCATION WITH ARCHITECT PRIOR TO INSTALLATION. PROVIDE ALL APPURTENANCES NECESSARY FOR A COMPLETE SYSTEM INSTALLATION.
7. PROVIDE POWER CONNECTION TO RADIO AND RADIO ANTENNA. VERIFY EXACT HEIGHT AND EXACT LOCATION WITH ARCHITECT PRIOR TO ROUGH-IN.

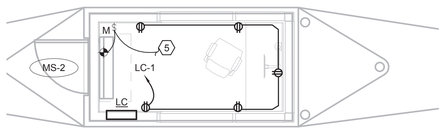

3 PARTIAL FLOOR PLAN - FEE BOOTH 24 - POWER
SCALE: 1/4" = 1'-0"
TRUE NORTH

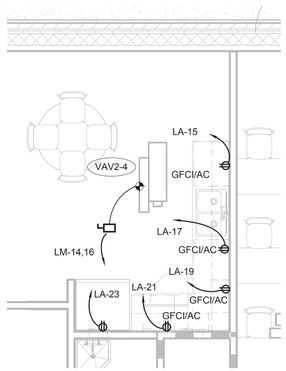

4 PARTIAL FLOOR PLAN - BREAKROOM 21 - POWER
SCALE: 1/4" = 1'-0"
TRUE NORTH

TEXAS PARKS & WILDLIFE

FORD POWELL &CARSON
Architects & Planners, Inc.
Architecture
Planning
Preservation
Interior Design
1138 East Commerce Street
San Antonio, Texas 78205
210/226-1246
FPC# 92705

7/2/20
STATE OF TEXAS
RYAN A. ROYAL
94773
LICENSED
PROFESSIONAL ENGINEER
Alderson & Associates, Inc.
F-1008

ALDERSON & ASSOCIATES, INC
MEP ENGINEERING | COMMISSIONING
7700 Torino St, Suite 101
San Antonio, TX 78229
Telephone: 210.614.1110
PROJECT # 17012

© 2020 Alderson & Associates, Inc. F-1008

TYLER STATE PARK
HEADQUARTERS PHASE 1
PROJECT NUMBER: 112741

DATE: 07/03/2020
DESIGNED BY: LE
DRAWN BY: LE
REVIEWED BY: RAR

no.	revision	date

SHEET TITLE
POWER ENLARGED FLOOR PLANS

SHEET NUMBER
E303

CONSTRUCTION DOCUMENTS

DATE: 7/2/2020 5:17:40 PM PATH: BIM 360://17-012 Tyler State Park Visitor Center Replacement/17012 Tyler - E19.rvt

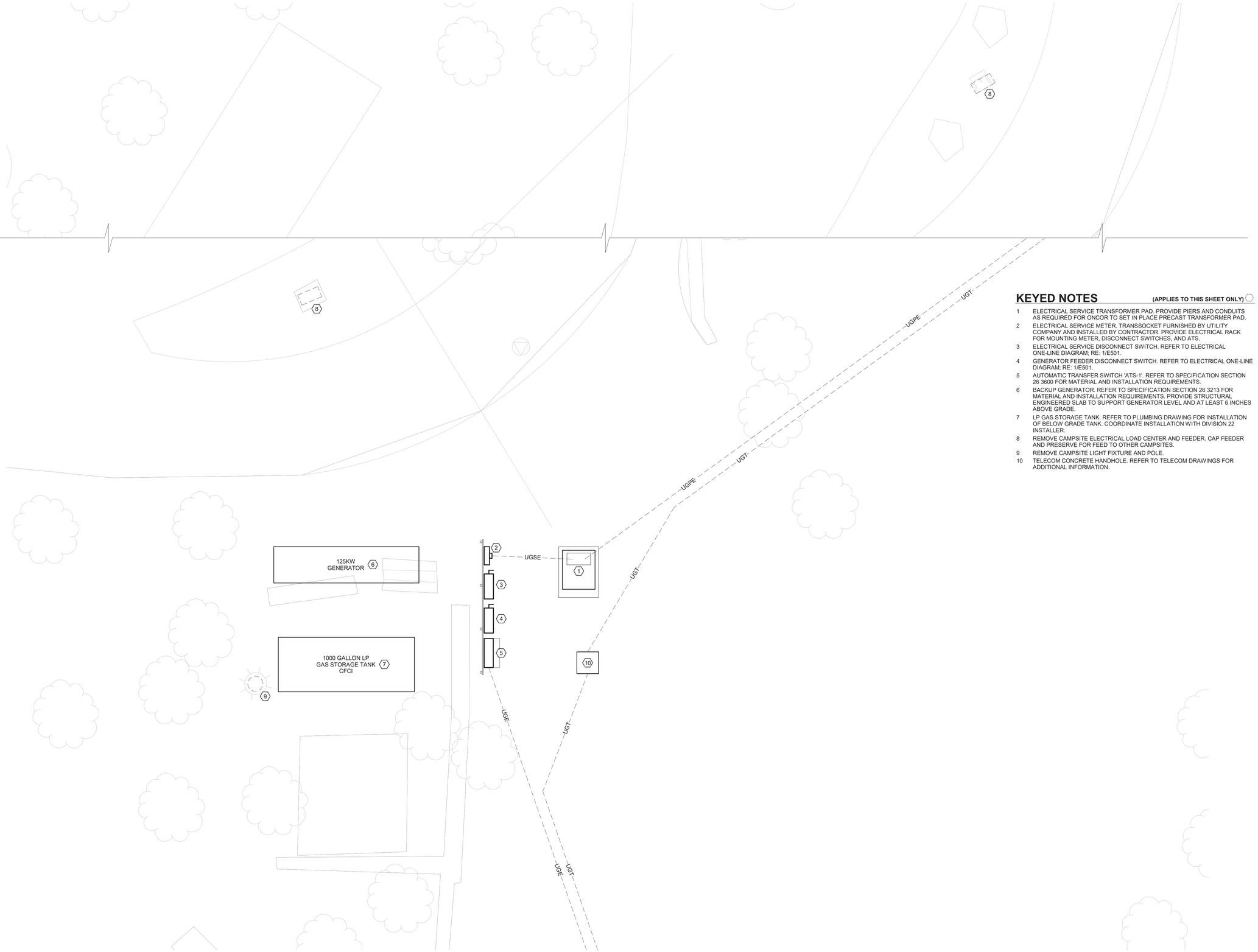

KEYED NOTES (APPLIES TO THIS SHEET ONLY)

1 ELECTRICAL SERVICE TRANSFORMER PAD. PROVIDE PIERS AND CONDUITS AS REQUIRED FOR ONCOR TO SET IN PLACE PRECAST TRANSFORMER PAD.

2 ELECTRICAL SERVICE METER. TRANSSOCKET FURNISHED BY UTILITY COMPANY AND INSTALLED BY CONTRACTOR. PROVIDE ELECTRICAL RACK FOR MOUNTING METER, DISCONNECT SWITCHES, AND ATS.

3 ELECTRICAL SERVICE DISCONNECT SWITCH. REFER TO ELECTRICAL ONE-LINE DIAGRAM; RE: 1/E501.

4 GENERATOR FEEDER DISCONNECT SWITCH. REFER TO ELECTRICAL ONE-LINE DIAGRAM; RE: 1/E501.

5 AUTOMATIC TRANSFER SWITCH 'ATS-1'. REFER TO SPECIFICATION SECTION 26 3600 FOR MATERIAL AND INSTALLATION REQUIREMENTS.

6 BACKUP GENERATOR. REFER TO SPECIFICATION SECTION 26 3213 FOR MATERIAL AND INSTALLATION REQUIREMENTS. PROVIDE STRUCTURAL ENGINEERED SLAB TO SUPPORT GENERATOR LEVEL AND AT LEAST 6 INCHES ABOVE GRADE.

7 LP GAS STORAGE TANK. REFER TO PLUMBING DRAWING FOR INSTALLATION OF BELOW GRADE TANK. COORDINATE INSTALLATION WITH DIVISION 22 INSTALLER.

8 REMOVE CAMPSITE ELECTRICAL LOAD CENTER AND FEEDER. CAP FEEDER AND PRESERVE FOR FEED TO OTHER CAMPSITES.

9 REMOVE CAMPSITE LIGHT FIXTURE AND POLE.

10 TELECOM CONCRETE HANDHOLE. REFER TO TELECOM DRAWINGS FOR ADDITIONAL INFORMATION.

1 ENLARGED GENERATOR AREA - POWER

SCALE: 1/4" = 1'-0"

TRUE NORTH

TEXAS PARKS & WILDLIFE

FORD POWELL &CARSON
Architects & Planners, Inc.
Architecture
Planning
Preservation
Interior Design
1138 East Commerce Street
San Antonio, Texas 78205
210/226-1246
FPC# 92705

8/13/20
STATE OF TEXAS
RYAN A. ROYAL
94773
LICENSED
PROFESSIONAL ENGINEER
Alderson & Associates, Inc.
F-1008

ALDERSON & ASSOCIATES, INC
MEP ENGINEERING | COMMISSIONING
7700 Torino St, Suite 101
San Antonio, TX 78229
Telephone: 210.614.1210
© 2020 Alderson & Associates, Inc. F-1008

PROJECT # 17012

TYLER STATE PARK
HEADQUARTERS PHASE 1
PROJECT NUMBER: 112741

DATE: 07/03/2020
DESIGNED BY: Designer
DRAWN BY: Author
REVIEWED BY: Checker

no.	revision	date

SHEET TITLE
POWER ENLARGED FLOOR PLANS

SHEET NUMBER
E304

CONSTRUCTION DOCUMENTS

DATE: 8/13/2020 11:10:49 AM PATH: BIM 360://17-012 Tyler State Park Visitor Center Replacement/17012_Tyler_-_E19.rvt

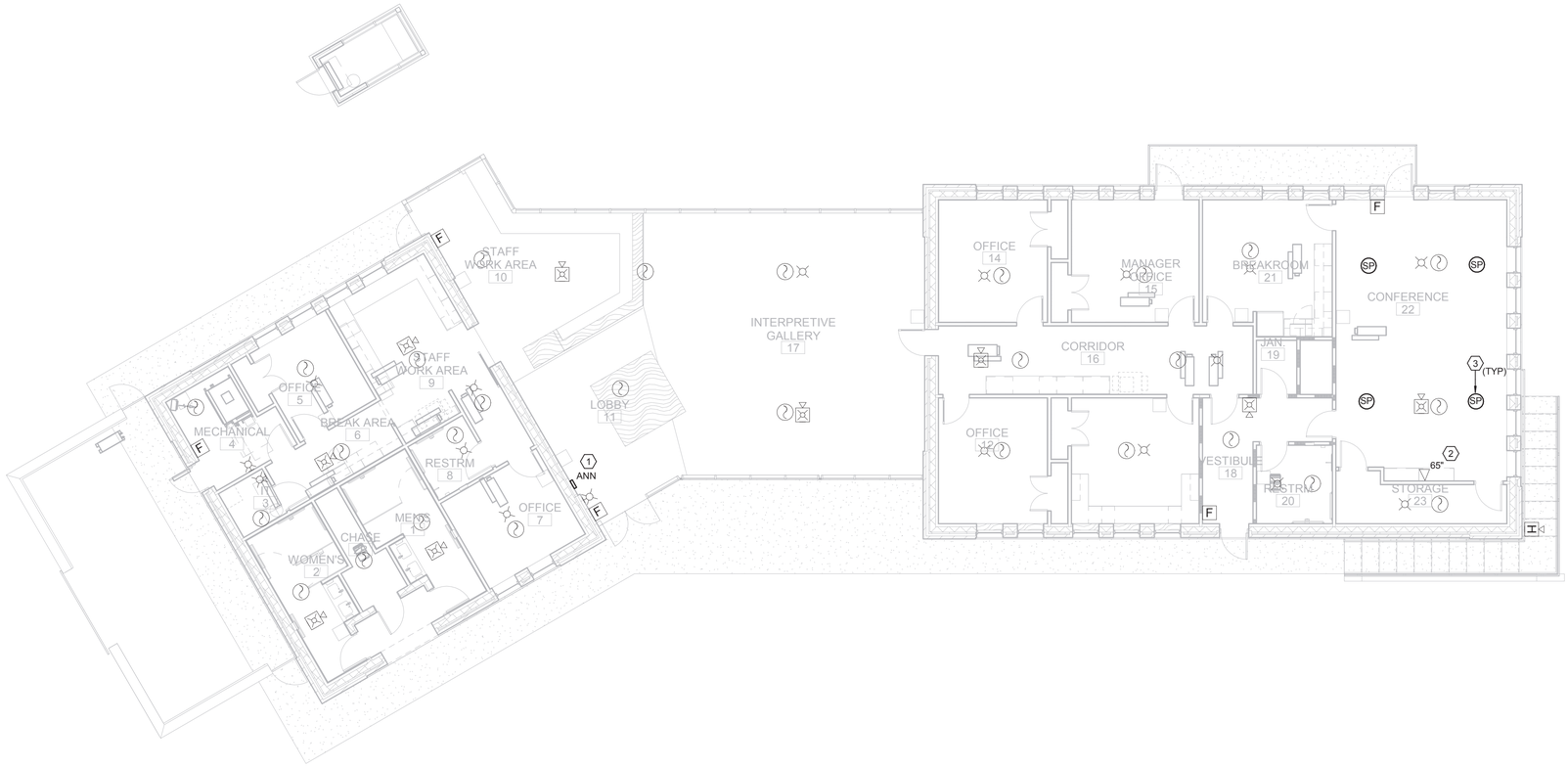

1 FIRST FLOOR PLAN - SPECIAL SYSTEMS

SCALE: 1/8" = 1'-0"

TRUE NORTH

GENERAL
FIRE ALARM NOTES (APPLIES TO ALL SHEETS)

1. FIRE ALARM DRAWINGS ARE BASIS OF DESIGN DOCUMENTS. CONTRACTOR SHALL PROVIDE COMPLETE DESIGN FOR A FULLY OPERATIONAL AND CODE COMPLIANT FIRE ALARM SYSTEM, AND SHALL PROVIDE NECESSARY PARTS, LABOR, AND EQUIPMENT FOR THE INSTALLATION.
2. PREPARE AND SUBMIT DETAILED FIRE ALARM DOCUMENTS TO AHJ FOR REVIEW AND APPROVAL.
3. PREPARE A FRAMED LAYOUT OF THE FIRE ALARM SYSTEM ON THE BUILDING FLOOR PLAN, SHOWING ALL FIRE ALARM DEVICES AND IDENTIFICATION OF DETECTION DEVICES. LOCATE AT FACP AND AT CONTROL ROOM NEAR FIRE ALARM REMOTE DISPLAY.
4. COORDINATE INSTALLATION AND CERTIFICATION OF NEW FIRE ALARM SYSTEM DEVICES WITH AN AUTHORIZED REPRESENTATIVE.
5. DURING FIRST YEAR FROM DATE OF SUBSTANTIAL COMPLETION:
   A.FURNISH FIRE ALARM SYSTEM SEMI-ANNUAL TESTS AND INSPECTIONS.
   B.FURNISH SERVICE, MAINTENANCE, AND REMOTE STATION MONITORING FEES OF FIRE ALARM SYSTEM.
6. FIRE ALARM SYSTEM: FULLY ADDRESSABLE TYPE SYSTEM, SATISFYING REQUIREMENTS OF SPECIFICATION SECTION 28 51 00.
7. COORDINATE CEILING MOUNTING FIRE ALARM DEVICE LOCATIONS WITH OTHER CEILING MOUNTED DEVICES.
8. COORDINATE MOUNTING OF ANNUNCIATION DEVICES TO BE VISIBLE BELOW LIGHT FIXTURES, PIPING, DUCTWORK, AND OTHER VISUAL OBSTRUCTIONS.
9. COORDINATE INSTALLATION AND WIRING OF DUCT MOUNTED SMOKE DETECTORS WITH DIVISION 23 INSTALLER.
10. COORDINATE LOCATION, QUANTITY, AND TYPE FIRE ALARM DEVICES FOR SPRINKLER RISER WITH DIVISION 21 INSTALLER AND DEVICES SUPPLIED.

KEYED NOTES (APPLIES TO THIS SHEET ONLY)

1. COORDINATE EXACT LOCATION FOR FIRE ALARM ANNUNCIATOR PANEL WITH ARCHITECT PRIOR TO ROUGH-IN.
2. PROVIDE DATA CONNECTION TO TV. VERIFY EXACT HEIGHT AND EXACT LOCATION WITH ARCHITECT PRIOR TO ROUGH-IN.
3. PROVIDE CEILING MOUNTED SPEAKERS FOR SOUND SYSTEM. SOUND SYSTEM TO BE FURNISHED BY OWNER.

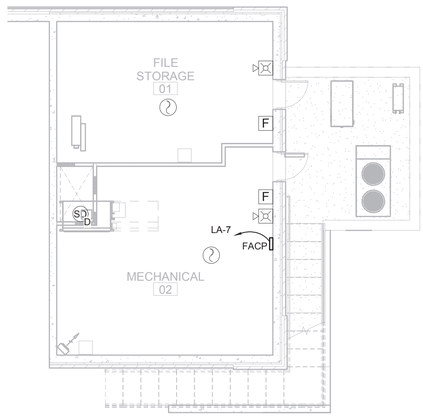

2 BASEMENT FLOOR PLAN - SPECIAL SYSTEMS

SCALE: 1/8" = 1'-0"

TRUE NORTH

TEXAS PARKS & WILDLIFE

FORD POWELL &CARSON
Architects & Planners, Inc.
Architecture
Planning
Preservation
Interior Design
1138 East Commerce Street
San Antonio, Texas 78205
210/226-1246
FPC# 92705

7/2/20
STATE OF TEXAS
RYAN A. ROYAL
94773
LICENSED
PROFESSIONAL ENGINEER
Alderson & Associates, Inc.
F-1008

ALDERSON & ASSOCIATES, INC. MEP ENGINEERING | COMMISSIONING
7700 Torino St, Suite 101
San Antonio, TX 78229
Telephone: 210.614.1110
© 2020 Alderson & Associates, Inc. F-1008
PROJECT # 17012

TYLER STATE PARK
HEADQUARTERS PHASE 1
PROJECT NUMBER: 112741

DATE: 07/03/2020
DESIGNED BY: LE
DRAWN BY: LE
REVIEWED BY: RAR

no.	revision	date

SHEET TITLE
SPECIAL SYSTEMS FLOOR PLAN

SHEET NUMBER
E401

CONSTRUCTION DOCUMENTS

DATE: 7/2/2020 5:17:41 PM
PATH: RIM 360://17-012 Tyler State Park Visitor Center Replacement/17012 Tyler - E19.rvt

KEYED NOTES: (APPLIES TO THIS SHEET)

1. GROUNDING CONDUCTOR BONDED TO WATER PIPE. REFER TO PLUMBING DRAWINGS FOR ADDITIONAL INFORMATION.
2. PROVIDE 1/4"x2"x24" CU MAIN GROUND BAR, MOUNTED AT 24" A.F.F.
3. PROVIDE 1/4"x2"x12" CU GROUND BAR FOR IT ROOM, MOUNTED AT 24" A.F.F.
4. GROUNDING ELECTRODE CONDUCTORS MUST BE PROTECTED IF EXPOSED TO PHYSICAL DAMAGE. GROUNDING METHODS MUST COMPLY WITH NEC ARTICLE 250.
5. PRIMARY ELECTRICAL DUCTBANK: (2) 4" CONDUITS FOR POWER AND (2) 4" CONDUITS FOR TELECOM. PROVIDE BORING, CONDUIT, AND CONCRETE BACKFILL. ENSURE CONDUIT PATHWAYS ARE CLEAN AND PREPARED FOR INSTALLATION OF CONDUCTORS BY ELECTRIC UTILITY.
6. UTILITY PAD-MOUNT TRANSFORMER. PROVIDE PIERS AND CONDUITS AS REQUIRED FOR ONCOR TO SET IN PLACE PRECAST TRANSFORMER PAD.
7. UTILITY TRANSSOCKET: FURNISHED BY ONCOR AND INSTALLED BY CONTRACTOR.
8. BACKUP GENERATOR. REFER TO SPECIFICATION SECTION 26 3213 FOR MATERIAL AND INSTALLATION REQUIREMENTS.
9. GENERATOR MANUAL TRANSFER SWITCH: 600-AMP, TWO-HANDLE, MANUAL TRANSFER SWITCH WITH CAMLOCKS FOR CONNECTION OF PORTABLE LOAD BANK AND TEMPORARY GENERATOR.
10. AUTOMATIC TRANSFER SWITCH. REFER TO SPECIFICATION SECTION 26 3600 FOR MATERIAL AND INSTALLATION REQUIREMENTS.

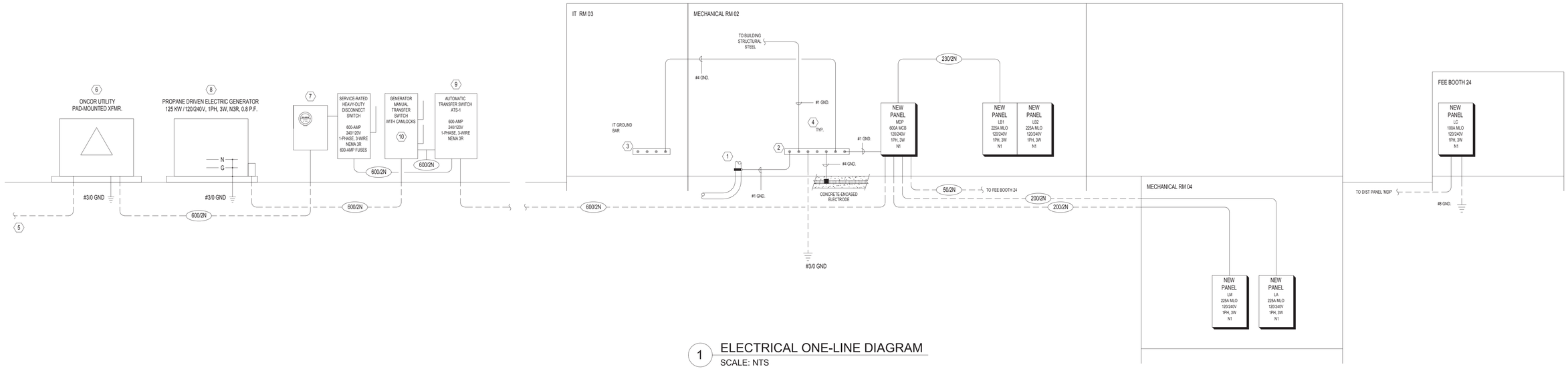

1 ELECTRICAL ONE-LINE DIAGRAM
SCALE: NTS

FEEDER SCHEDULE					
1 PHASE, 3 WIRE					
TAG	CONDUIT		PHASE CONDUCTORS	NEUTRAL CONDUCTORS	GROUND CONDUCTORS
50/2N	(1)3/4"	EACH WITH	(2) 8 AWG	(1) 8 AWG	(1) 10
200/2N	(1) 2"	EACH WITH	(2) 3/0 AWG	(1) 3/0 AWG	(1) 6
230/2N	(1) 2"	EACH WITH	(2) 4/0 AWG	(1) 4/0 AWG	(1) 4
600/2N	(2) 2-1/2"	EACH WITH	(2) 350 KCMIL	(1) 350 KCMIL	(1) 1
NOTES:					
1. CONDUIT SIZES ARE FOR CONDUIT INDICATED WITH THHN, THWN INSULATED COPPER CONDUCTORS WITH MAXIMUM 40% FILL. CONTRACTOR SHALL ADJUST CONDUIT SIZE AS REQUIRED PER NEC APPENDIX C, CONDUIT FILL TABLES FOR ALL OTHER CONDUIT AND INSULATION TYPES.					
2. REFER TO SPECIFICATIONS FOR ADDITIONAL CONDUIT APPLICATION AND INSTALLATION REQUIREMENTS.					
3. PROVIDE LUGS AS REQUIRED FOR FEEDERS INDICATED.					

Load Analysis: ELECTRICAL SERVICE

Voltage: 120/240V, 1PH, 3W

Serving:	**Load VA**
ATS-1	103040 VA

Load Classification	Connected Load (VA)	Demand Factor	Estimated Demand...	Panel Totals	
Cooling	10618 VA	100.00%	10618 VA		
Equipment	2112 VA	100.00%	2112 VA	**Total Conn. Load VA:**	106534 VA
Fan	1056 VA	125.00%	1320 VA	**Total Demand VA:**	**111288 VA**
Heating	27195 VA	100.00%	27195 VA	**Total Demand Amps:**	**432 A**
Lighting	3888 VA	125.00%	4860 VA		
Other	31236 VA	100.00%	31236 VA		
Receptacle	26980 VA	100.00%	26980 VA		
Interior Lighting per NEC	18000 VA	1.25%	22500 VA		

Notes:
1. <Interior Lighting per NEC> is obtained from NEC 220.12.
2. Totals use (<Existing Lighting> + <Lighting>) or <Interior Lighting per NEC>, whichever is larger.
3. Totals use <Cooling> or <Heating>, whichever is larger.

TEXAS PARKS & WILDLIFE

FORD POWELL &CARSON
Architects & Planners, Inc.
Architecture
Planning
Preservation
Interior Design
1138 East Commerce Street
San Antonio, Texas 78205
210/226-1246
FPC# 92705

7/2/20
STATE OF TEXAS
RYAN A. ROYAL
94773
LICENSED
PROFESSIONAL ENGINEER
Alderson & Associates, Inc.
F-1008

ALDERSON & ASSOCIATES, INC. MEP ENGINEERING | COMMISSIONING
7700 Torino St. Suite 101
San Antonio, TX 78229
Telephone: 210.614.1110

© 2020 Alderson & Associates, Inc. F-1008

PROJECT # 17012

TYLER STATE PARK
HEADQUARTERS PHASE 1
PROJECT NUMBER: 112741

DATE: 07/03/2020
DESIGNED BY: LE
DRAWN BY: LE
REVIEWED BY: RAR

no.	revision	date

SHEET TITLE
ELECTRICAL RISER DIAGRAM

SHEET NUMBER
E501

CONSTRUCTION DOCUMENTS

PATH: RIM 360://17-012 Tyler State Park Visitor Center Replacement/17012 Tyler - E19.rvt
DATE: 7/2/2020 5:17:42 PM

Lighting Fixture Schedule

Type	Manufacturer	Catalog Number	Description	Lamp Qty	Lamp Type	Ballast Qty	Ballast Type	Mounting	Voltage	Wattage
A1	COOPER	22CZ2-39-UNV-L835-CD-1-U	SPECIFICATION-GRADE, RECESSED 2' x 2' TROFFER WITH CENTER MOUNTED LIGHT SOURCE.	1	LED 3500K	1	LED DRIVER	RECESSED CEILING	120 V	30 VA
A1E	COOPER	22CZ2-39-UNV-EL14W-L835-CD-1-U	LUMINAIRE TO MATCH FIXTURE TYPE 'A1', BUT WITH INTEGRAL EMERGENCY BATTERY BACKUP.	1	LED 3500K	1	LED DRIVER	RECESSED CEILING	120 V	30 VA
A2	COOPER	22CZ2-44-UNV-L835-CD-1-U	SPECIFICATION-GRADE, RECESSED 2' x 2' TROFFER WITH CENTER MOUNTED LIGHT SOURCE.	1	LED 3500K	1	LED DRIVER	RECESSED CEILING	120 V	35 VA
A2E	COOPER	22CZ2-44-UNV-EL14W-L835-CD-1-U	LUMINAIRE TO MATCH FIXTURE TYPE 'A2', BUT WITH INTEGRAL EMERGENCY BATTERY BACKUP.	1	LED 3500K	1	LED DRIVER	RECESSED CEILING	120 V	35 VA
A3	COOPER	22CZ2-32-UNV-L835-CD-1-U	SPECIFICATION-GRADE, RECESSED 2' x 2' TROFFER WITH CENTER MOUNTED LIGHT SOURCE.	1	LED 3500K	1	LED DRIVER	RECESSED CEILING	120 V	26 VA
A3E	COOPER	22CZ2-32-UNV-EL14W-L835-CD-1-U	LUMINAIRE TO MATCH FIXTURE TYPE 'A3', BUT WITH INTEGRAL EMERGENCY BATTERY BACKUP.	1	LED 3500K	1	LED DRIVER	RECESSED CEILING	120 V	26 VA
C1	COOPER	4SNILED-LD5-37SL-LW-UNV-L835-CD-1-U; AYC-CHAIN/SET	4' SUSPENDED LENSED LED STRIPLIGHT.	1	LED 3500K	1	LED DRIVER	CHAIN / SURFACE	120 V	28 VA
C1E	COOPER	4SNLED-LD5-37SL-LW-UNV-EL14W-L835-CD-1-U; AYC-CHAIN/SET	LUMINAIRE TO MATCH FIXTURE TYPE 'C1', BUT WITH INTEGRAL EMERGENCY BATTERY BACKUP.	1	LED 3500K	1	LED DRIVER	CHAIN / SURFACE	120 V	28 VA
D1	WAC	DS-CD05-F30-XX	SURFACE MOUNTED 5" DIAMETER LED CYLINDER DOWNLIGHT RATED FOR EXTERIOR APPLICATIONS. COORDINATE FINISHES WITH ARCHITEC.	1	LED 3000K	1	LED DRIVER	SURFACE CEILING	120 V	25 VA
D2	CAMMAN LIGHTING	P8800-36-LN-35K-CLV-1-XX-XX-AC	ARCHITECTURAL SUSPENDED LED LUMINAIRE WITH CYLINDRICAL ACRYLIC DIFFUSER AND CABLE SUSPENSION. COORDINATE FINISH WITH ARCHITECT.	1	LED 3500K	1	LED DRIVER	SUSPENDED	120 V	25 VA
D3	COOPER	LD6B-15-D010-EU6B-1020-8035-6LB-M-1-XX	6-INCH DIAMETER, RECESSED LED DOWNLIGHT. COORDINATE TRIM FINISH WITH ARCHITECT.	1	LED 3500K	1	LED DRIVER	RECESSED CEILING	120 V	16 VA
D3E	COOPER	LD6B-15-D010-IEMBOD-EU6B-1020-8035-6LB-M-1-XX	LUMINAIRE TO MATCH FIXTURE TYPE 'D3', BUT WITH INTEGRAL EMERGENCY BATTERY BACKUP.	1	LED 3500K	1	LED DRIVER	RECESSED CEILING	120 V	16 VA
D4	CAMMAN LIGHTING	P8800-24-LN-35K-CLV-1-XX-XX-AC	ARCHITECTURAL SUSPENDED LED LUMINAIRE WITH CYLINDRICAL ACRYLIC DIFFUSER AND CABLE SUSPENSION. COORDINATE FINISH WITH ARCHITECT.	1	LED 3500K	1	LED DRIVER	SUSPENDED	120 V	25 VA
D5	CAMMAN LIGHTING	P8800-48-LN-35K-CLV-1-XX-XX-AC	ARCHITECTURAL SUSPENDED LED LUMINAIRE WITH CYLINDRICAL ACRYLIC DIFFUSER AND CABLE SUSPENSION. COORDINATE FINISH WITH ARCHITECT.	1	LED 3500K	1	LED DRIVER	SUSPENDED	120 V	25 VA
F1	MP LIGHTING	L650L-C10-10-6-W30H-W-F-C72-WO-I	ARCHITECTURAL SUSPENDED LINEAR PENDANT IN 6-FOOT LENGTH WITH SOLID WHITE OAK LUMINAIRE HOUSING AND ADJUSTABLE CABLE SUSPENSION.	1	LED 3000K	1	LED DRIVER	SUSPENDED	120 V	60 VA
F2	COOPER	S124DR-S575D-835-XX-6F0-1-UDD-R-XX	4-INCH WIDE RECESSED DIRECT LINEAR FIXTURE IN 6-FOOT LENGTH. COORDINATE GRID TYPE AND FINISH WITH ARCHITECT.	1	LED 3500K	1	LED DRIVER	RECESSED CEILING	120 V	30 VA
F2E	COOPER	S124DR-S575D-835-XX-6F0-1B2-UDD-R-XX	LUMINAIRE TO MATCH FIXTURE TYPE 'F2', BUT WITH INTEGRAL EMERGENCY BATTERY BACKUP.	1	LED 3500K	1	LED DRIVER	RECESSED CEILING	120 V	30 VA
F3	COOPER	S124DR-H795D-835-XX-9F0-1-UDD-R-XX	4-INCH WIDE RECESSED DIRECT LINEAR FIXTURE IN 9-FOOT LENGTH. COORDINATE GRID TYPE AND FINISH WITH ARCHITECT.	1	LED 3500K	1	LED DRIVER	RECESSED CEILING	120 V	55 VA
F3E	COOPER	S124DR-H795D-835-XX-9F0-1B2-UDD-R-XX	LUMINAIRE TO MATCH FIXTURE TYPE 'F3', BUT WITH INTEGRAL EMERGENCY BATTERY BACKUP.	1	LED 3500K	1	LED DRIVER	RECESSED CEILING	120 V	55 VA
F4	COOPER	S124DR-S575D-835-XX-2F0-1-UDD-R-XX	4-INCH WIDE RECESSED DIRECT LINEAR FIXTURE IN 2-FOOT LENGTH. COORDINATE GRID TYPE AND FINISH WITH ARCHITECT.	1	LED 3500K	1	LED DRIVER	RECESSED CEILING	120 V	10 VA
F5	COOPER	S124DR-S575D-835-XX-4F0-1-UDD-R-XX	4-INCH WIDE RECESSED DIRECT LINEAR FIXTURE IN 4-FOOT LENGTH. COORDINATE GRID TYPE AND FINISH WITH ARCHITECT.	1	LED 3500K	1	LED DRIVER	RECESSED CEILING	120 V	19 VA
F5E	COOPER	S124DR-S575D-835-XX-4F0-1B2-UDD-R-XX	LUMINAIRE TO MATCH FIXTURE TYPE 'F5', BUT WITH INTEGRAL EMERGENCY BATTERY BACKUP.	1	LED 3500K	1	LED DRIVER	RECESSED CEILING	120 V	19 VA
F6	COOPER	S124DR-S575D-835-XX-5F0-1-UDD-R-XX	4-INCH WIDE RECESSED DIRECT LINEAR FIXTURE IN 5-FOOT LENGTH. COORDINATE GRID TYPE AND FINISH WITH ARCHITECT.	1	LED 3500K	1	LED DRIVER	RECESSED CEILING	120 V	24 VA
N1	ARCLUCE	O-ST1013US-31I	INGRADE LIGHT FIXTURE WITH STAINLESS STEEL BODY AND TRIM FOR LOW-LEVEL LIGHTING ONE ONE SIDE ALONG PATHWAYS. RATED FOR FOOT TRAFFIC AND EXTERIOR APPLICATIONS AND LISTED FOR WET LOCATIONS.	1	LED 3000K	1	LED DRIVER	INGRADE	120 V	4 VA
W1E	OCL	VEGA VA1-O10A-08-WF-XX-L3-30K-UNV-DM1	LED WALL SCONCE WITH MODIFIED CYLINDRICAL BODY. REMOTE EMERGENCY BALLAST IN ADJACENT SPACE. COORDINATE FINISHES WITH ARCHITECT.	1	LED 3000K	1	LED DRIVER	SURFACE WALL	120 V	25 VA
X1	LITHONIA	EDG EL	SINGLE FACE BATTERY BACKUP SIDE LITE LED EXIT SIGN. REFER TO PLANS FOR REQUIRED NUMBER OF FACES, ARROWS AND MOUNTING REQUIREMENTS(CEILING/WALL). VERIFY FINISH AND LED COLOR(RED/GREEN) WITH ARCHITECT PRIOR TO ORDERING.	1	LED	1	LED DRIVER	UNIVERSAL WALL/CEILING	277 V	11 VA
X2	LITHONIA	EDG EL	DOUBLE FACE BATTERY BACKUP SIDE LITE LED EXIT SIGN. REFER TO PLANS FOR REQUIRED NUMBER OF FACES, ARROWS AND MOUNTING REQUIREMENTS(CEILING/WALL). VERIFY FINISH AND LED COLOR(RED/GREEN) WITH ARCHITECT PRIOR TO ORDERING.	1	LED	1	LED DRIVER	UNIVERSAL WALL/CEILING	277 V	11 VA
X3	LITHONIA	LE S XX 1 XX 120/277	DIE-CAST SINGLE FACELED EXIT SIGN. REFER TO PLANS FOR REQUIRED NUMBER OF FACES, ARROWS AND MOUNTING REQUIREMENTS(CEILING/WALL). VERIFY FINISH AND LED COLOR(RED/GREEN) WITH ARCHITECT PRIOR TO ORDERING.	1	LED	1	LED DRIVER	UNIVERSAL WALL/CEILING	277 V	11 VA

Equipment Connection Schedule

HVAC Unit Designation	HP	FLA	MCA	MOCP	Total kW	Voltage	Ph	HVAC Unit Location: Space Name	HVAC Unit Location: Space #	Disconnect	Feeder Tag	Panel Name	Circuit #	Remarks
AHU-1		6.4 A	8.0 A	15 A	1.5 kW	240 V	1			30A/2P/NF/N1	(1) 3/4"C. EA. W/ (2)-#12, (1)-#12GND	LB1	1,3	
AHU-2		11.9 A	14.9 A	20 A	2.9 kW	240 V	1			30A/2P/NF/N1	(1) 3/4"C. EA. W/ (2)-#12,(1)-#12N, (1)-#12GND	LM	9,11	
CU-1		28.0 A	35.0 A	60 A	6.7 kW	240 V	1			60A/2P/NF/N3R	(1) 1"C. EA. W/ (2)-#6,(1)-#6N, (1)-#8GND	LM	1,3	
CU-2		42.4 A	53.0 A	70 A	10.2 kW	240 V	1			100A/2P/NF/N3R	(1) 1"C. EA. W/ (2)-#4,(1)-#4N, (1)-#8GND	LM	5,7	
EF-1		4.4 A		15 A	0.5 kW	120 V	1			MOTOR RATED SWITCH	(1) 3/4"C. EA. W/ (2)-#12, (1)-#12GND			
EF-2		4.4 A		15 A	0.5 kW	120 V	1			MOTOR RATED SWITCH	(1) 3/4"C. EA. W/ (2)-#12, (1)-#12GND	LM	27	
MS-1		13.0 A	16.2 A	20 A	2.7 kW	208 V	1			MOTOR RATED SWITCH	(1) 3/4"C. EA. W/ (2)-#12, (1)-#12GND			FED FROM OUTDOOR UNIT.
MS-2		13.0 A	16.3 A	20 A	3.1 kW	240 V	1			MOTOR RATED SWITCH	(1) 3/4"C. EA. W/ (2)-#12,(1)-#12N, (1)-#12GND			
MSCU-1		13.0 A	16.2 A	20 A	3.1 kW	240 V	1			MOTOR RATED SWITCH	(1) 3/4"C. EA. W/ (2)-#12,(1)-#12N, (1)-#12GND	LM	17,19	
MSCU-2		13.0 A	16.2 A	20 A	3.1 kW	240 V	1			MOTOR RATED SWITCH	(1) 3/4"C. EA. W/ (2)-#12,(1)-#12N, (1)-#12GND	LB1	29,31	
PUMP-1		12.0 A		20 A	2.9 kW	240 V	1			30A/2P/NF/N3R	(1) 3/4"C. EA. W/ (2)-#12,(1)-#12N, (1)-#12GND	LB1	17,19	
PUMP-2		12.0 A		20 A	2.9 kW	240 V	1			30A/2P/NF/N3R	(1) 3/4"C. EA. W/ (2)-#12,(1)-#12N, (1)-#12GND	LB1	21,23	
UH-1		11.0 A	13.8 A	15 A	2.6 kW	240 V	1			30A/2P/NF/N1	(1) 3/4"C. EA. W/ (2)-#12, (1)-#12GND	LB1	5,7	
UH-2		11.0 A	13.8 A	15 A	2.6 kW	240 V	1			30A/2P/NF/N1	(1) 3/4"C. EA. W/ (2)-#12,(1)-#12N, (1)-#12GND	LM	21,23	
VAV1-1		4.6 A	5.7 A	15 A	1.1 kW	240 V	1			30A/2P/NF/N1	(1) 3/4"C. EA. W/ (2)-#12, (1)-#12GND	LB1	2,4	
VAV1-2		9.0 A	11.3 A	15 A	2.2 kW	240 V	1			30A/2P/NF/N1	(1) 3/4"C. EA. W/ (2)-#12, (1)-#12GND	LB1	6,8	
VAV1-3		15.9 A	19.9 A	20 A	3.8 kW	240 V	1			30A/2P/NF/N1	(1) 3/4"C. EA. W/ (2)-#12, (1)-#12GND	LB1	10,12	
VAV1-4		9.0 A	11.3 A	15 A	2.2 kW	240 V	1			30A/2P/NF/N1	(1) 3/4"C. EA. W/ (2)-#12, (1)-#12GND	LB1	14,16	
VAV1-5		4.6 A	5.7 A	15 A	1.1 kW	240 V	1			30A/2P/NF/N1	(1) 3/4"C. EA. W/ (2)-#12, (1)-#12GND	LB1	18,20	
VAV1-6		4.6 A	5.7 A	15 A	1.1 kW	240 V	1			30A/2P/NF/N1	(1) 3/4"C. EA. W/ (2)-#12, (1)-#12GND	LB1	22,24	
VAV2-1		20.4 A	25.5 A	30 A	4.9 kW	240 V	1			30A/2P/NF/N1	(1) 3/4"C. EA. W/ (2)-#10,(1)-#10N, (1)-#10GND	LM	2,4	
VAV2-2		4.6 A	5.7 A	15 A	1.1 kW	240 V	1			30A/2P/NF/N1	(1) 3/4"C. EA. W/ (2)-#12,(1)-#12N, (1)-#12GND	LM	6,8	
VAV2-3		9.0 A	11.3 A	15 A	2.2 kW	240 V	1			30A/2P/NF/N1	(1) 3/4"C. EA. W/ (2)-#12,(1)-#12N, (1)-#12GND	LM	10,12	
VAV2-4		4.6 A	5.7 A	15 A	1.1 kW	240 V	1			30A/2P/NF/N1	(1) 3/4"C. EA. W/ (2)-#12,(1)-#12N, (1)-#12GND	LM	14,16	
VAV2-5		4.6 A	5.7 A	15 A	1.1 kW	240 V	1			30A/2P/NF/N1	(1) 3/4"C. EA. W/ (2)-#12,(1)-#12N, (1)-#12GND	LM	18,20	
VAV2-6		9.0 A	11.3 A	15 A	2.2 kW	240 V	1			30A/2P/NF/N1	(1) 3/4"C. EA. W/ (2)-#12,(1)-#12N, (1)-#12GND	LM	22,24	
VAV2-7		4.6 A	5.7 A	15 A	1.1 kW	240 V	1			30A/2P/NF/N1	(1) 3/4"C. EA. W/ (2)-#12,(1)-#12N, (1)-#12GND	LM	26,28	
WH-1		10.4 A	13.0 A	15 A	2.5 kW	240 V	1			30A/2P/NF/N1	(1) 3/4"C. EA. W/ (2)-#12, (1)-#12GND	LB1	9,11	
WH-2		10.4 A	13.0 A	15 A	2.5 kW	240 V	1			30A/2P/NF/N1	(1) 3/4"C. EA. W/ (2)-#12,(1)-#12N, (1)-#12GND	LM	13,15	

TEXAS PARKS & WILDLIFE

FORD POWELL &CARSON
Architects & Planners, Inc.
Architecture
Planning
Preservation
Interior Design
1138 East Commerce Street
San Antonio, Texas 78205
210/226-1246
FPC# 92705

7/2/20
STATE OF TEXAS
RYAN A. ROYAL
94773
LICENSED
PROFESSIONAL ENGINEER
Alderson & Associates, Inc.
F-1008

ALDERSON & ASSOCIATES, INC
MEP ENGINEERING | COMMISSIONING
7700 Torino St. Suite 101
San Antonio, TX 78229
Telephone: 210.614.1110

© 2020 Alderson & Associates, Inc. F-1008

PROJECT # 17012

TYLER STATE PARK
HEADQUARTERS PHASE 1
PROJECT NUMBER: 112741

DATE: 07/03/2020
DESIGNED BY: LE
DRAWN BY: LE
REVIEWED BY: RAR

no.	revision	date

SHEET TITLE
ELECTRICAL SCHEDULES

SHEET NUMBER
E601

CONSTRUCTION DOCUMENTS

PATH: BIM 360://17-012 Tyler State Park Visitor Center Replacement/17012 Tyler – E19.rvt
DATE: 7/2/2020 5:17:59 PM

Distribution Panel: MDP

Location: MECHANICAL 4 | **Volts:** 120/240 Single | **A.I.C. Rating:** 22000 A
Supply From: ATS-1 | **Phases:** 1 | **Mains Type:** MCB
Mounting: SURFACE | **Wires:** 3 | **Mains Rating:** 600 A
Enclosure: NEMA 1 | **MCB Rating:** 600 A

CKT	Circuit Description	Type	Trip	Poles	A		B		Poles	Trip	Type	Circuit Description	CKT
1	Panel 'LM' - Basement Mechanical Room	Other;...	200 A	2	21175	900			2	100 A	Lighting...	Panel "LC" - Fee Booth	
	--	--	--	--			21343	26	--	--	--	--	2
3	Panel 'LA' - Basement Mechanical Room	Lighting...	200 A	2					--	--	--	Space Only	
	--	--	--	--					--	--	--		4
5	Panel 'LB1', Panel 'LB2' - West Mechanical Room	Lighting...	225 A	2	21221	0			--	--	--	Space Only	
	--	--	--	--			21376	0	--	--	--		6
7	Prepared Space	--	--	--					--	--	--	Space Only	
		--	--	--					--	--	--		8
9	Prepared Space	--	--	--	0	0			--	--	--	Space Only	
		--	--	--			0	0	--	--	--		10
				Total Load:	52165 VA		50876 VA						
				Total Amps:	435 A		424 A						

Load Classification	Connected Load	Demand Factor	Estimated Demand	Panel Totals	
Cooling	10618 VA	100.00%	10618 VA		
Heating	27195 VA	100.00%	27195 VA	**Total Conn. Load(KVA):**	103040 VA
Lighting	3888 VA	125.00%	4860 VA	**Total Demand(KVA):**	93648 VA
Other	31236 VA	100.00%	31236 VA	**Total Demand(Amps):**	390 A
Receptacle	26980 VA	100.00%	26980 VA		

Notes:

Load Center: LC

Location: | **Volts:** 120/240 Single | **A.I.C. Rating:** 22000 A
Supply From: MDP | **Phases:** 1 | **Mains Type:** MLO
Mounting: RECESSED | **Wires:** 3 | **Mains Rating:** 100 A
Enclosure: NEMA 1

CKT	Circuit Description	Type	Trip	Poles	A		B		Poles	Trip	Type	Circuit Description	CKT
1	Receptacle - Fee Booth 24	Recept...	20 A	1	900	0			1	20 A	--	Spare	2
3	Lighting - Fee Booth 24	Lighting	20 A	1			26	0	1	20 A	--	Spare	4
5	Spare	--	20 A	1	0	0			1	20 A	--	Spare	6
7	Spare	--	20 A	1			0	0	1	20 A	--	Spare	8
9	Space Only	--	--	--	0	0			--	--	--	Space Only	10
11	Space Only	--	--	--			0	0	--	--	--	Space Only	12
				Total Load:	900 VA		26 VA						
				Total Amps:	8 A		0 A						

Load Classification	Connected Load	Demand Factor	Estimated Demand	Panel Totals	
Lighting	26 VA	125.00%	32 VA		
Receptacle	900 VA	100.00%	900 VA	**Total Conn. Load(KVA):**	926 VA
				Total Demand(KVA):	932 VA
				Total Demand(Amps):	4 A

Notes:

Branch Panel: LM

Location: MECHANICAL 02 | **Volts:** 120/240 Single | **A.I.C. Rating:** 22000 A
Supply From: MDP | **Phases:** 1 | **Mains Type:** MLO
Mounting: SURFACE | **Wires:** 3 | **Mains Rating:** 225 A
Enclosure: NEMA 1

CKT	Circuit Description	Type	Trip	Poles	A		B		Poles	Trip	Type	Circuit Description	CKT
1	Condensing Unit CU-1 - Mech. Yard	Heating	60 A	2	3360	2448			2	30 A	Other	Terminal Unit VAV2-1 Corridor 16	2
3	--	--	--	--			3360	2448	--	--	--	--	4
5	Condensing Unit CU-2 - Mech. Yard	Heating	70 A	2	5088	547			2	15 A	Other	Terminal Unit VAV2-2 Manager's Office 15	6
7	--	--	--	--			5088	547	--	--	--	--	8
9	Air Handling Unit AHU-2 - Basement Mech. Room 02	Cooling	20 A	2	1430	1085			2	15 A	Other	Terminal Unit VAV2-3 Corridor 16	10
11	--	--	--	--			1430	1085	--	--	--	--	12
13	Water Heater WH-2 - Basement Mech. Room 02	Heating	15 A	2	1250	547			2	15 A	Other	Terminal Unit VAV2-4 Breakroom 21	14
15	--	--	--	--			1250	547	--	--	--	--	16
17	Mini-Split Cond. Unit MSCU-1 - Mech. Yard	Cooling	20 A	2	1555	547			2	15 A	Other	Terminal Unit VAV2-5 Corridor 16	18
19	--	--	--	--			1555	547	--	--	--	--	20
21	Unit Heater UH-2 - Basement Mech. Room 02	Heating	15 A	2	1325	1085			2	15 A	Other	Terminal Unit VAV2-6 Conference Room 22	22
23	--	--	--	--			1325	1085	--	--	--	--	24
25	Sump Pump SP-1 Controller - Basement Mech. 02	Recept...	20 A	1	180	547			2	15 A	Other	Terminal Unit VAV2-7 Basement Storage Room 01	26
27	Exhaust Fan EF-2 - Toilet Room 20	Fan	15 A	1			528	547	--	--	--	--	28
29	RP-2 Rec Mech 02	Recept...	20 A	1	180								30
31													32
33													34
35	Space Only	--	--	--			0	0	--	--	--	Space Only	36
37	Space Only	--	--	--	0	0			--	--	--	Space Only	38
39	Space Only	--	--	--			0	0	--	--	--	Space Only	40
41	Space Only	--	--	--	0	0			--	--	--	Space Only	42
				Total Load:	21175 VA		21343 VA						
				Total Amps:	176 A		178 A						

Load Classification	Connected Load	Demand Factor	Estimated Demand	Panel Totals	
Cooling	5971 VA	100.00%	5971 VA		
Heating	22045 VA	100.00%	22045 VA	**Total Conn. Load(KVA):**	42517 VA
Other	13613 VA	100.00%	13613 VA	**Total Demand(KVA):**	36678 VA
Receptacle	360 VA	100.00%	360 VA	**Total Demand(Amps):**	153 A

Notes:

Branch Panel: LA

Location: MECHANICAL 02 | **Volts:** 120/240 Single | **A.I.C. Rating:** 22000 A
Supply From: MDP | **Phases:** 1 | **Mains Type:** MLO
Mounting: SURFACE | **Wires:** 3 | **Mains Rating:** 225 A
Enclosure: NEMA 1

CKT	Circuit Description	Type	Trip	Poles	A		B		Poles	Trip	Type	Circuit Description	CKT
1	Front Walkways - Exterior Lighting	Lighting	20 A	1	320	392			1	20 A	Lighting	Basement Mechanical, Storage Room - Lighting	2
3	East Bldg Mounted - Exterior Lighting	Lighting	20 A	1			125	544	1	20 A	Lighting	Offices, Corridor Rooms 12, 14, 15, 16 - Lighting	4
5	Spare	--	20 A	1	0	639			1	20 A	Lighting	Break Room, Corridor, Conference Room 22 -...	6
7	Fire Alarm Control Panel - Basement Mechanical...	Other	20 A	1			120	180	1	20 A	Recept...	Floor Outlet 1 - Conference Room 22	8
9	Floor Outlets North - Interpretive Gallery 17	Recept...	20 A	1	540	180			1	20 A	Recept...	Floor Outlet 2 - Conference Room 22	10
11	Floor Outlets South - Interpretive Gallery 17	Recept...	20 A	1			540	180	1	20 A	Recept...	Floor Outlet 3 - Conference Room 22	12
13	Receptacles East Wall - Interpretive Gallery 17	Recept...	20 A	1	360	180			1	20 A	Recept...	Floor Outlet 4 - Conference Room 22	14
15	Counter Receptacle 1 - Breakroom 21	Recept...	20 A	1			180	540	1	20 A	Recept...	Credenza Receptacles - Conference Room 22	16
17	Counter Receptacle 2 - Breakroom 21	Recept...	20 A	1	180	180			1	20 A	Recept...	Projector - Conference Room 22	18
19	Counter Receptacle 3 (Coffee Maker) - Breakroom...	Recept...	20 A	1			1000	200	1	20 A	Other	Motorized Screen - Conference Room 22	20
21	Counter Receptacle 4 (Microwave) - Breakroom 21	Recept...	20 A	1	1000	720			1	20 A	Recept...	Receptacles East - Conference Room 22, Storage...	22
23	Refrigerator - Breakroom 21 (See Note 1)	Recept...	20 A	1			1200	540	1	20 A	Recept...	Receptacles West - Conference Room 22, Storage...	24
25	Receptacles - Office 12, Office 13, Vestibule 18	Recept...	20 A	1	720	720			1	20 A	Recept...	Receptacles - Conference Room 22, Break Room 21	26
27	Receptacles - Office 12, Office 13	Recept...	20 A	1			1080	20	1	20 A	Lighting	Lighting	28
29	Receptacles - Corridor 16	Recept...	20 A	1	720	360			1	20 A	Recept...	Receptacles - Basement Mechanical, Storage Room	30
31	Copier Receptacle - Corridor 16	Recept...	20 A	1			1000	360	1	20 A	Recept...	Receptacles - Basement Mech., Exterior Mech. Yard	32
33	Receptacles - Office 14, Office 15, Corridor 16	Recept...	20 A	1	540	360			1	20 A	Recept...	East Bldg Mounted - Exterior Receptacles	34
35	Receptacles - Office 14, Office 15	Recept...	20 A	1			1080						36
37	Receptacles - Janitor 19, Toilet Room 20	Recept...	20 A	1	360	0			1	20 A	--	Spare	38
39								0	1	20 A	--	Spare	40
41	Spare	--	20 A	1	0	0			1	20 A	--	Spare	42
				Total Load:	8144 VA		8869 VA						
				Total Amps:	68 A		74 A						

Load Classification	Connected Load	Demand Factor	Estimated Demand	Panel Totals	
Lighting	1760 VA	125.00%	2200 VA		
Other	320 VA	100.00%	320 VA	**Total Conn. Load(KVA):**	17007 VA
Receptacle	15000 VA	100.00%	15000 VA	**Total Demand(KVA):**	17430 VA
				Total Demand(Amps):	73 A

Notes:

1. Circuit indicated shall include GFCI protection for personnel style circuit breaker.

Branch Panel: LB1

Location: MECHANICAL 4 | **Volts:** 120/240 Single | **A.I.C. Rating:** 22000 A
Supply From: MDP | **Phases:** 1 | **Mains Type:** MLO
Mounting: SURFACE | **Wires:** 3 | **Mains Rating:** 225 A
Enclosure: NEMA 1

CKT	Circuit Description	Type	Trip	Poles	A		B		Poles	Trip	Type	Circuit Description	CKT
1	Air Handling Unit AHU-1 - West Mechanical Room 4	Cooling	15 A	2	768	547			2	15 A	Other	Terminal Unit VAV1-1 - Break Area 6	2
3	--	--	--	--			768	547	--	--	--	--	4
5	Unit Heater UH-1 - West Mechanical Room 4	Heating	15 A	2	1325	1085			2	15 A	Other	Terminal Unit VAV1-2 - Staff Work Area 9	6
7	--	--	--	--			1325	1085	--	--	--	--	8
9	Water Heater WH-1 - West Mechanical Room 4	Heating	15 A	2	1250	1910			2	20 A	Other	Terminal Unit VAV1-3 - Staff Work Area 9 9	10
11	--	--	--	--			1250	1910	--	--	--	--	12
13	Exhaust Fan EF-1 CHASE 2B	Fan	15 A	1	528	1085			2	15 A	Other	Terminal Unit VAV1-4 - Staff Work Area 9	14
15	Lift Station Pump-1 Controller - Radio Tower Yard	Other	20 A	1			100	1085	--	--	--	--	16
17	Lift Station Pump-1 - Radio Tower Yard	Other	20 A	2	1440	547			2	15 A	Other	Terminal Unit VAV1-5 - Office 5	18
19	--	--	--	--			1440	547	--	--	--	--	20
21	Lift Station Pump-2 - Radio Tower Yard	Other	20 A	2	1440	547			2	15 A	Other	Terminal Unit VAV1-6 - Office 7	22
23	--	--	--	--			1440	547	--	--	--	--	24
25	Receptacle - Radio Tower Yard	Recept...	20 A	1	360	1056			1	20 A	Equipm...	Hand dryers MEN'S 1	26
27	Recirc. Pump RP-1 - West Mechanical Room 4	Recept...	20 A	1			180	1056	1	20 A	Equipm...	Hand dryers WOMEN'S 2	28
29	Mini-Split Cond. Unit MSCU-2 - Exterior Yard	Cooling	20 A	2	1555	360			1	20 A	Recept...	FAUCET Receptacle WOMEN'S 2	30
31	--	--	--	--			1555	360	1	20 A	Recept...	FAUCET Receptacle MEN'S 1	32
33	Space	--	--	--	0	0			--	--	--	Space	34
35	Space	--	--	--			0	0	--	--	--	Space	36
37	Space	--	--	--	0	0			--	--	--	Space	38
39	Space	--	--	--			0	0	--	--	--	Space	40
41	Space	--	--	--	0	0			--	--	--	Space	42
				Total Load:	15804 VA		15196 VA						
				Total Amps:	132 A		127 A						

Load Classification	Connected Load	Demand Factor	Estimated Demand	Panel Totals	
Cooling	4646 VA	100.00%	4646 VA		
Heating	5149 VA	100.00%	5149 VA	**Total Conn. Load(KVA):**	30999 VA
Other	17303 VA	100.00%	17303 VA	**Total Demand(KVA):**	26485 VA
Receptacle	1260 VA	100.00%	1260 VA	**Total Demand(Amps):**	110 A

Notes:

Branch Panel: LB2

Location: MECHANICAL 4 | **Volts:** 120/240 Single | **A.I.C. Rating:** 22000 A
Supply From: MDP | **Phases:** 1 | **Mains Type:** MLO
Mounting: SURFACE | **Wires:** 3 | **Mains Rating:** 225 A
Enclosure: NEMA 1

CKT	Circuit Description	Type	Trip	Poles	A		B		Poles	Trip	Type	Circuit Description	CKT
1	Lighting Room 4, 2B, 3, 1, 2	Lighting	20 A	1	168	486			1	20 A	Lighting	Lighting Room 5, 6, 9, 8, 7	2
3	Lighting	Lighting	20 A	1			0	1320	1	20 A	Lighting	Lighting Room 10, 17	4
5	Lighting	Lighting	20 A	1	173	180			1	20 A	Recept...	Receptacle GFCI MECHANICAL 4	6
7	Rec OFFICE 5 & 7 BREAK AREA 6 WRK AREA 9	Recept...	20 A	1			720	180	1	20 A	Recept...	Receptacle IT 3	8
9	QUAD Receptacle IT 3	Recept...	20 A	1	360	180			1	20 A	Recept...	Receptacle IT 3	10
11	MICROWAVE BREAK AREA 6	Recept...	20 A	1			180	180	1	20 A	Recept...	Receptacle BREAK AREA 6	12
13	COFFE MAKER BREAK AREA 6	Recept...	20 A	1	180	180			1	20 A	Recept...	REFRIGERATOR BREAK AREA 6	14
15	Receptacle OFFICE 5 WORK AREA 9	Recept...	20 A	1			900	900	1	20 A	Recept...	Receptacle STAFF WORK AREA 10	16
17	RADIO EQUIP. Receptacle STAFF WORK AREA 9	Recept...	20 A	1	180	540			1	20 A	Recept...	Receptacle STAFF WORK AREA 10	18
19	Receptacle STAFF WORK AREA 9 & 10	Recept...	20 A	1			720	180	1	20 A	Recept...	Receptacle STAFF WORK AREA 9	20
21	Receptacle OFFICE 7 & LOBBY 11	Recept...	20 A	1	540	1080			1	20 A	Recept...	Receptacle WOMEN'S 2 MENS 1 CHASE 2B RR 8	22
23	Receptacle STAFF WORK AREA 10 & LOBBY 11	Recept...	20 A	1			360	360	1	20 A	Recept...	Rec WP/GFCI EXTERIOR	24
25	COPIER STAFF WORK AREA 9	Recept...	20 A	1	1000	180			1	20 A	Recept...	Receptacle Radio BREAK AREA 6	26
27	Spare	--	20 A	1			0	180	1	20 A	Recept...	Receptacle Radio Antenna BREAK AREA 6	28
29	Spare	--	20 A	1	0								30
31	Spare	--	20 A	1			0						32
33	Spare	--	20 A	1	0								34
35	Spare	--	20 A	1			0						36
37	Spare	--	20 A	1	0	0			1	20 A	--	Spare	38
39	Spare	--	20 A	1			0	0	1	20 A	--	Spare	40
41	Spare	--	20 A	1	0	0			1	20 A	--	Spare	42
				Total Load:	5418 VA		6180 VA						
				Total Amps:	45 A		52 A						

Load Classification	Connected Load	Demand Factor	Estimated Demand	Panel Totals	
Lighting	2139 VA	125.00%	2673 VA		
Receptacle	9460 VA	100.00%	9460 VA	**Total Conn. Load(KVA):**	11598 VA
				Total Demand(KVA):	12132 VA
				Total Demand(Amps):	51 A

Notes:

TEXAS PARKS & WILDLIFE

FORD POWELL &CARSON
Architects & Planners, Inc.
Architecture
Planning
Preservation
Interior Design
1138 East Commerce Street
San Antonio, Texas 78205
210/226-1246
FPC# 92705

7/2/2020
STATE OF TEXAS
RYAN A. ROYAL
94773
LICENSED
PROFESSIONAL ENGINEER
Alderson & Associates, Inc.
F-1008

ALDERSON ASSOCIATES, INC
MEP ENGINEERING | COMMISSIONING
7700 Torino St. Suite 101
San Antonio, TX 78229
Telephone: 210.614.1110

© 2020 Alderson & Associates, Inc. F-1008

PROJECT # 17012

TYLER STATE PARK
HEADQUARTERS PHASE 1
PROJECT NUMBER: 112741

DATE: 07/03/2020
DESIGNED BY: LE
DRAWN BY: LE
REVIEWED BY: RAR

no.	revision	date

SHEET TITLE
ELECTRICAL SCHEDULES

SHEET NUMBER
E602

CONSTRUCTION DOCUMENTS

PATH: RIM 365://17-012 Tyler State Park Visitor Center Replacement/17012 Tyler - E19.rvt
DATE: 7/2/2020 5:17:59 PM

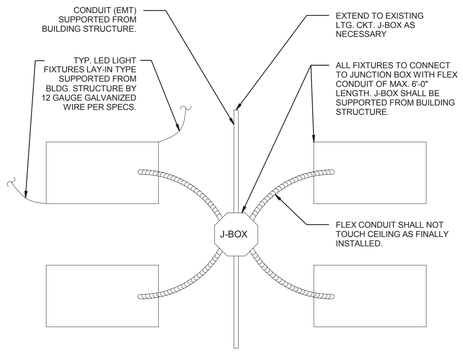

1 TYPICAL LIGHTING BRANCH CIRCUIT DETAIL

SCALE: NOT TO SCALE

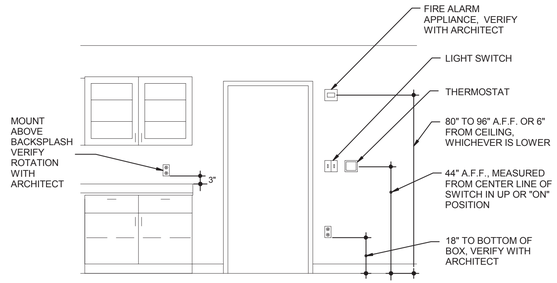

2 DEVICE MOUTING DETAIL

SCALE: NOT TO SCALE

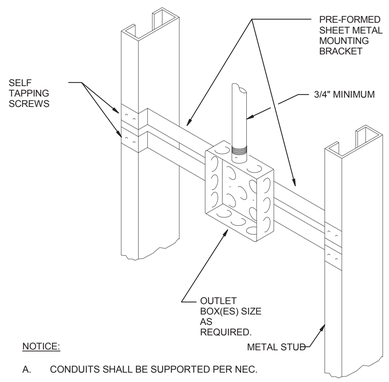

NOTICE:

A. CONDUITS SHALL BE SUPPORTED PER NEC.

B. THIS DETAIL TO BE USED FOR ALL RECEPTACLE INSTALLATIONS NOT INCLUDED IN OTHER DETAILS. IF DEPTH OF BOX EXCEEDS 2-1/2", PROVIDE SUPPORT BRACKET SIMILAR TO AND EQUAL IN STRENGTH TO THE ONE SPECIFIED.

3 RECEPTACLE BOX MOUNTING DETAIL

SCALE: NOT TO SCALE

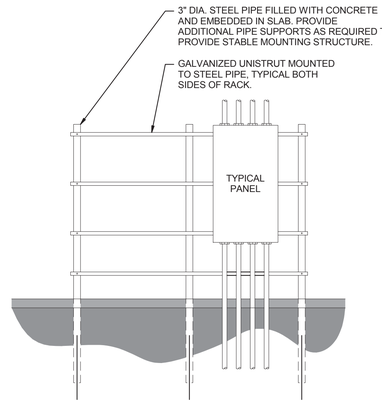

4 ELECTRICAL EQUIPMENT RACK DETAIL

SCALE: NOT TO SCALE

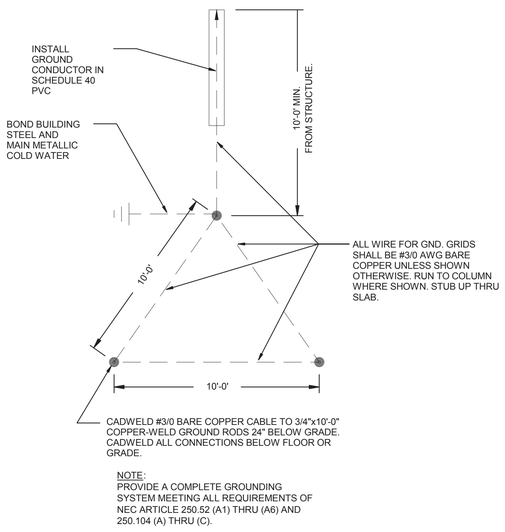

NOTE:
PROVIDE A COMPLETE GROUNDING SYSTEM MEETING ALL REQUIREMENTS OF NEC ARTICLE 250.52 (A1) THRU (A6) AND 250.104 (A) THRU (C).

5 GROUND ROD GRID DETAIL

SCALE: NOT TO SCALE

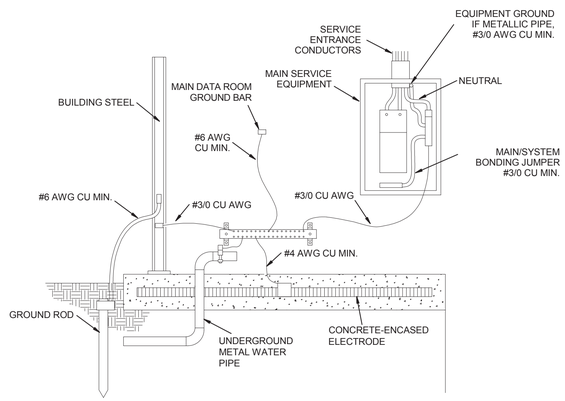

6 SERVICE EQUIPMENT GROUNDING DIAGRAM

SCALE: NOT TO SCALE

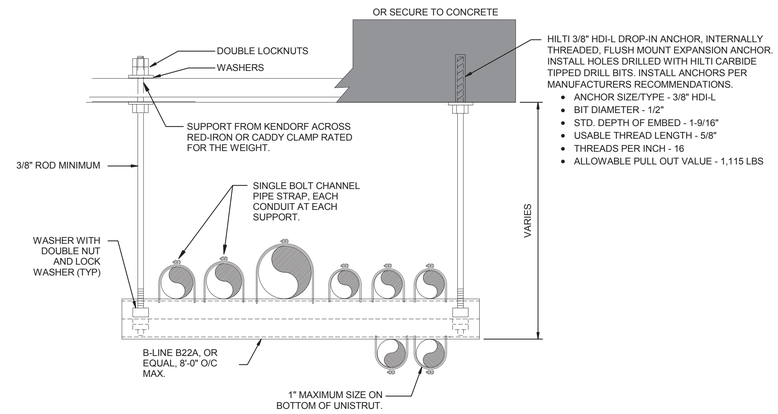

7 TRAPEZE FOR MULTIPLE CONDUIT DETAIL

SCALE: NOT TO SCALE

DATE: 7/2/2020 5:18:00 PM PATH: RIM 360://17-012 Tyler State Park Visitor Center Replacement/17012 Tyler – E19.rvt

TEXAS PARKS & WILDLIFE

FORD POWELL &CARSON
Architects & Planners, Inc.
Architecture
Planning
Preservation
Interior Design
1138 East Commerce Street
San Antonio, Texas 78205
210/226-1246
FPC# 92705

7/2/20
STATE OF TEXAS
RYAN A. ROYAL
94773
LICENSED
PROFESSIONAL ENGINEER
Alderson & Associates, Inc. F-1008

ALDERSON & ASSOCIATES, INC
MEP ENGINEERING | COMMISSIONING
7700 Torino St. Suite 101
San Antonio, TX 78250
Telephone: 210.614.1110
© 2020 Alderson & Associates, Inc. F-1008
PROJECT # 17012

TYLER STATE PARK
HEADQUARTERS PHASE 1
PROJECT NUMBER: 112741

DATE: 07/03/2020
DESIGNED BY: LE
DRAWN BY: LE
REVIEWED BY: RAR

no.	revision	date

SHEET TITLE
ELECTRICAL DETAILS

SHEET NUMBER
E701

CONSTRUCTION DOCUMENTS

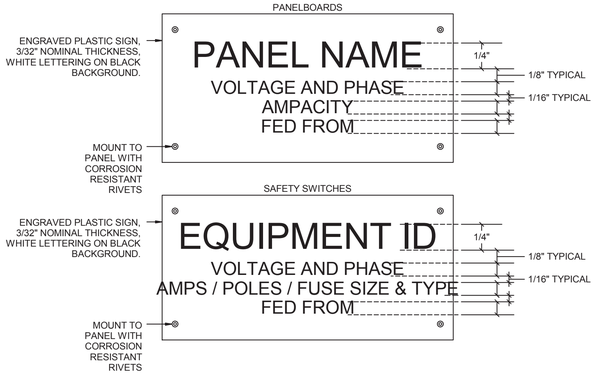

NOTE:
PROVIDE LABELS FOR ALL ELECTRICAL EQUIPMENT BEING INSTALLED, INCLUDING SWITCHBOARDS, PANELBOARDS, SAFETY SWITCHES, TRANSFORMERS, ETC.

1 EQUIPMENT LABELING DETAIL

SCALE: NOT TO SCALE

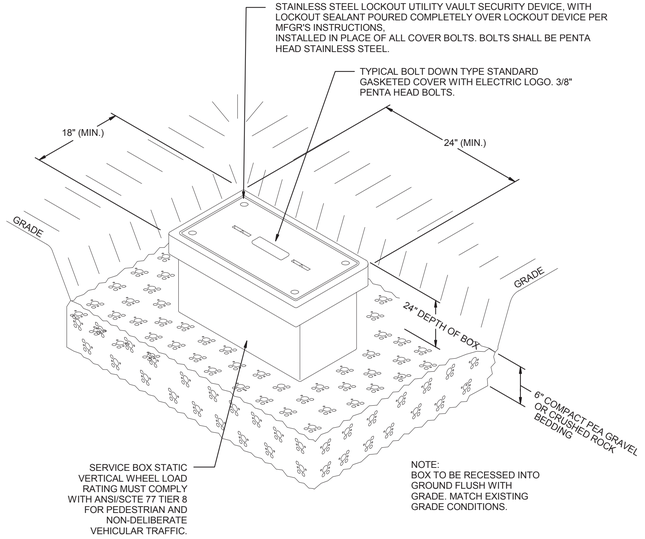

2 SITE PULLBOX - TYPICAL RECESSED BOX DETIAL - T8

SCALE: NOT TO SCALE

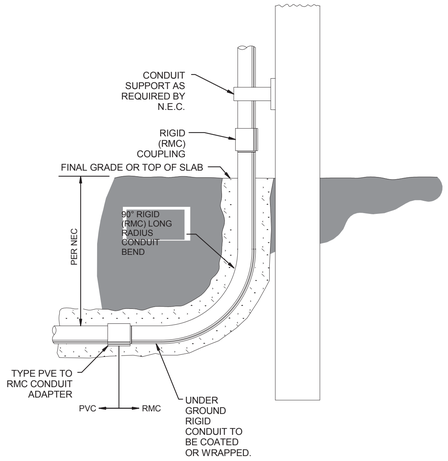

3 TYPICAL CONDUIT STUB-UP DETAIL

SCALE: NOT TO SCALE

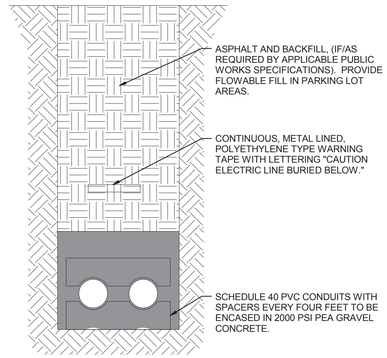

6 2-4" PRIMARY DUCTLINE DETAIL

SCALE: NOT TO SCALE

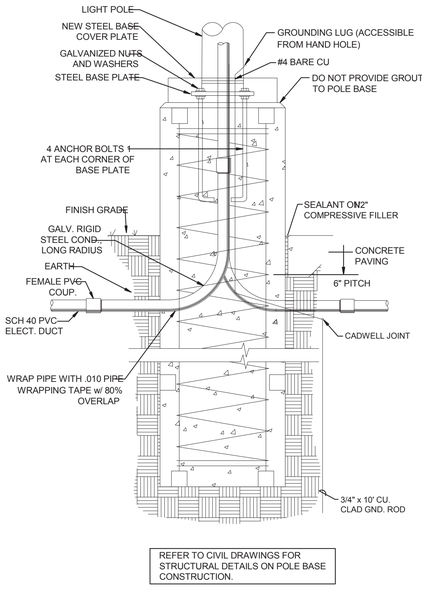

4 LIGHT POLE BASE

SCALE: NOT TO SCALE

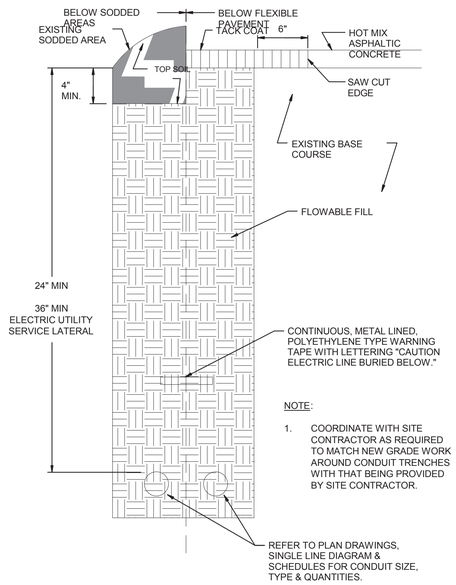

5 CONDUIT BURIAL - PARKING LOTS & DRIVEWAYS

SCALE: NOT TO SCALE

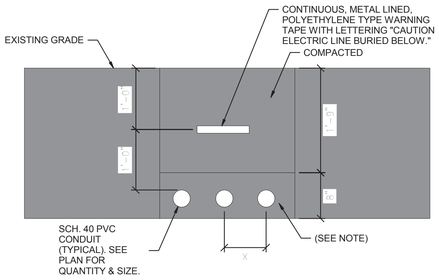

NOTES:
1. PROVIDE RED COLORED CONCRETE ENCASEMENT FOR SERVICE CONDUITS AND FOR CONDUITS INSTALLED BELOW PAVED TRAFFIC AREAS AND ELSEWHERE AS NOTED. PROVIDE SAND BEDDING ELSEWHERE.
2. CONDUIT SPACING SHALL BE AS FOLLOWS:
   X= 7.5" TYPICAL FOR POWER CONDUITS
   X= 24" SEPARATION BETWEEN POWER AND INSTRUMENT CONDUITS.

7 UG CONDUIT INSTALLATION

SCALE: NOT TO SCALE

TEXAS PARKS & WILDLIFE

FORD POWELL &CARSON
Architects & Planners, Inc.
Architecture
Planning
Preservation
Interior Design
1138 East Commerce Street
San Antonio, Texas 78205
210/226-1246
FPC# 92705

7/2/2020
STATE OF TEXAS
RYAN A. ROYAL
94773
LICENSED
PROFESSIONAL ENGINEER
Alderson & Associates, Inc.
F-1008

ALDERSON & ASSOCIATES, INC. MEP ENGINEERING | COMMISSIONING
7700 Torino St. Suite 101
San Antonio, TX 78229
Telephone: 210.614.1110
© 2020 Alderson & Associates, Inc. F-1008
PROJECT # 17012

TYLER STATE PARK
HEADQUARTERS PHASE 1
PROJECT NUMBER: 112741

DATE: 07/03/2020
DESIGNED BY: LE
DRAWN BY: LE
REVIEWED BY: RAR

no.	revision	date

SHEET TITLE
ELECTRICAL DETAILS

SHEET NUMBER
E702

CONSTRUCTION DOCUMENTS

DATE: 7/2/2020 5:18:00 PM
PATH: RIM 365://17-012 Tyler State Park Visitor Center Replacement/17012 Tyler - E19.rvt

PLUMBING SYMBOLS AND ABBREVIATIONS

(NOT ALL ITEMS INDICATED APPLY TO THIS PROJECT)

ABBREVIATIONS

AFF	ABOVE FINISHED FLOOR
AHU	AIR HANDLING UNIT
ANSI	AMERICAN NATIONAL STANDARDS INSTITUTE
ASME	AMERICAN SOCIETY OF ENGINEERS
ASSE	AMERICAN SOCIETY OF SANITARY ENGINEERS
ASTM	AMERICAN SOCIETY OF TESTING & MATERIALS
BTU	BRITISH THERMAL UNIT
BWV	BACK WATER VALVE
CFM	CUBIC FEET PER MINUTE
CPVC	CHLORINATED POLYVINYL CHLORIDE
CW	COLD WATER
ETR	EXISTING TO REMAIN
FBO	FURNISHED BY OTHERS
GC	GENERAL CONTRACTOR
GPM	GALLONS PER MINUTE
HW	HOT WATER
HWR	HOT WATER RETURN
KEC	KITCHEN EQUIPMENT CONTRACTOR
NFPA	NATIONAL FIRE PROTECTION ASSOCIATION
NIC	NOT IN CONTRACT
NSF	NATIONAL SANITATION FOUNDATION
NTS	NOT TO SCALE
PRV	PRESSURE REDUCING VALVE
PSI	POUNDS PER SQUARE INCH
PVC	POLYVINYL CHLORIDE
SPEC	SPECIFICATION
TWCO	TWO WAY CLEANOUT
TP	TRAP PRIMER
TYP	TYPICAL
VTR	VENT THROUGH ROOF

PLUMBING SYSTEM SYMBOLS

- (SS) SANITARY SEWER WASTE
- (V) SANITARY VENT
- (SD) STORM DRAIN
- (CW) COLD WATER
- (HW) HOT WATER *UNLESS OTHERWISE NOTED; NOTED: WATER SHALL BE TEMPERED AND FINAL DELIVERY TEMPERATURE SHALL NOT EXCEED 110° F
- (HWR) HOT WATER RECIRCULATION
- (G) GAS - NATURAL
- (G) GAS - PROPANE
- (TP) TRAP PRIMER

MISCELLANEOUS SYMBOLS

- POINT OF NEW CONNECTION TO EXISTING PIPE
- PLUMBING KEYED NOTE TAG
- DEMO FIRE PROTECTION KEYED NOTE TAG
- FIRE PROTECTION KEYED NOTE TAG
- REVISION TAG
- WC-1 — FIXTURE TAG
- 3"CW — PIPE SIZE AND TYPE
- 2 / P2.1 — DETAIL NUMBER AND SHEET NUMBER WHERE DETAIL OR ENLARGEMENT IS SHOWN

PLUMBING FIXTURE SYMBOLS

- FLOOR DRAIN
- FLOOR SINK
- FLOOR CLEANOUT
- YARD CLEANOUT
- LINE CLEANOUT/ WALL CLEANOUT
- ROOF DRAIN
- OVERFLOW ROOF DRAIN
- COMBINATION ROOF DRAIN AND OVERFLOW ROOF DRAIN
- WALL MOUNTED WATERCLOSET
- FLOOR MOUNTED WATERCLOSET
- WALL MOUNTED LAVATORY
- COUNTER MOUNTED LAVATORY
- URINAL
- COUNTER MOUNTED KITCHEN SINK
- COUNTER MOUNTED HAND SINK
- WALL MOUNTED HAND SINK
- DRINKING FOUNTAIN, BI-LEVEL
- DRINKING FOUNTAIN, SINGLE
- FLOOR MOUNTED MOP SINK
- WALL MOUNTED JANITOR SINK
- EMERGENCY SHOWER AND EYEWASH
- EMERGENCY SHOWER
- EMERGENCY EYEWASH
- WATER HEATER
- RECIRCULATING PUMP
- WASHING MACHINE SUPPLY BOX
- ICE MAKER SUPPLY BOX
- HOSE BIBB
- HOSE BIBB (RECESSED BOX)

NOTES
1. NOT ALL FIXTURES WILL BE SERVED BY COLD AND HOT WATER
2. ADA FIXTURES WILL BE NOTED AS SUCH ON FIXTURE SCHEDULE

PLUMBING FITTING SYMBOLS

- CAP ON END OF PIPE
- ELBOW UP
- ELBOW DOWN
- VALVE IN DROP
- VALVE IN RISE
- DIRECTION OF FLOW
- DIRECTION OF SLOPE DOWN
- CONCENTRIC REDUCER
- TEE OUTLET UP
- TEE OUTLET DOWN
- UNION
- FLANGE
- PIPE ANCHOR / SUPPORT
- EXPANSION JOINT
- STRAINER WITH BLOW-DOWN VALVE
- GATE VALVE OR BALANCING/STOP VALVE
- GLOBE VALVE
- BALL VALVE
- BALANCING VALVE WITH DIFFERENTIAL PRESSURE TAPS
- OS&Y VALVE
- CHECK VALVE
- BUTTERFLY VALVE
- TWO-WAY MODULATING CONTROL VALVE
- THREE-WAY MODULATING CONTROL VALVE
- SOLENOID VALVE
- PRESSURE REDUCING VALVE
- T&P RELIEF VALVE
- MANUAL AIR VENT
- AUTOMATIC AIR VENT
- PRESSURE GAUGE
- THERMOMETER
- WATER METER
- FLEXIBLE CONNECTION
- PRESSURE AND TEMPERATURE TAP
- FLOW VENTURI
- VACUUM BREAKER
- VACUUM RELIEF VALVE
- BACKFLOW PREVENTOR
- GAS REGULATOR
- GAS COCK

GENERAL PLUMBING NOTES

1. PRIOR TO CONSTRUCTION; CONTRACTOR SHALL FAMILIARIZE THEMSELVES WITH THE SITE AND ALL AVAILABLE AS-BUILT DRAWINGS RELATING TO THE PREVIOUS CONSTRUCTION OF ANY AND ALL EXISTING PLUMBING SYSTEMS.
2. THE CONTRACTOR IS EXPECTED, AS A REQUIREMENT OF THEIR QUALIFICATIONS, TO ANTICIPATE AND TO INCLUDE IN THE COST OF THE WORK ANY INCIDENTALS, WHICH MAY BE REQUIRED, BUT NOT SPECIFICALLY EXPRESSED HEREIN, IN ORDER TO PROVIDE COMPLETE AND FULLY FUNCTIONAL PLUMBING SYSTEMS FOR THE PROJECT AREA.
3. SANITARY SEWER PIPING 2" AND SMALLER TO BE INSTALLED AT A 2% SLOPE AND SANITARY SEWER PIPING 4" AND LARGER TO BE INSTALLED AT A 1% SLOPE.
4. CONTRACTOR SHALL COORDINATE EQUIPMENT CONNECTIONS WITH SUPPLIER AND INSTALLATION DRAWINGS. INSTALL EQUIPMENT AND MAKE FINAL CONNECTIONS, FURNISHIING CUTOFF VALVES, P-TRAPS, PRVS AND PIPING AS REQUIRED.
5. COORDINATE WATER, WASTE, VENT AND OTHER PIPING WITH ALL OTHER TRADES TO AVOID SPACING AND ROUTING PROBLEMS.
6. FIXTURES, EQUIPMENT, CONNECTIONS AND PIPING SHALL BE FURNISHED AND INSTALLED TO MEET OR EXCEED STATE AND LOCAL CODES AND REQUIREMENTS.
7. FURNISH AND INSTALL SHOCK ARRESTORS IN WATER LINES AT COLD WATER CONNECTIONS TO FLUSH VALVES AND QUICK CLOSING VALVES AND AT EACH HOT AND COLD WATER CONNECTION TO FIXTURES.
8. PLUMBING VENTS AND STACKS THROUGH ROOF SHALL BE INSTALLED A MINIMUM OF 20 FEET CLEAR OF HVAC OUTSIDE AIR INTAKES AND ANY OPERABLE WINDOW OR BUILDING OPENING.
9. VENT STACKS LESS THAN TWO INCHES IN DIAMETER SHALL NOT ROUTE THROUGH THE ROOF. PROVIDE INCREASERS ON PIPING BELOW ROOF.
10. PENETRATIONS THROUGH WALLS SHALL BE SLEEVED, SEALED AND FIRESAFED TO MAINTAIN THE INTEGRITY OF THE WALL UL FIRE RESISTANCE RATING.
11. DRAWINGS ARE SCHEMATIC IN NATURE AND SHALL NOT BE SCALED. CONTRACTOR IS RESPONSIBLE FOR COORDINATING EXACT ROUTING OF ALL SERVICES WITH BUILDING CONDITIONS AND WITH ALL OTHER TRADES.
13. SUPPORTS, ANCHOR BOLTS AND HANGERS FOR ALL EQUIPMENT SPECIFIED SHALL CONFORM TO THE SPECIFICATIONS. MISCELLANEOUS STEEL BRACING SUPPORTS AND REINFORCING STEEL NEEDED TO SUPPORT EQUIPMENT AND PIPING SYSTEMS SPECIFIED SHALL BE FURNISHED AND INSTALLED AS PART OF THE WORK.
14. MAINTAIN ACCESSIBILITY OF ALL EQUIPMENT AND VALVES. PROVIDE ACCESS PANELS AS REQUIRED. COORDINATE PLACEMENT WITH THE ARCHITECT PRIOR TO INSTALLATION.
15. COORDINATE SLEEVING OF BEAMS AND CORING OF STRUCTURE WITH STRUCTURAL DRAWINGS AND DETAILS PRIOR TO INSTALLATION.
16. CONTRACTOR TO COORDINATE THE INSTALLATION OF THE PLUMBING SYSTEMS WITH ALL OTHER TRADES.
17. PROVIDE ISOLATION VALVES AT ALL HW AND CW BRANCHES.
18. ALL ISOLATION VALVES SHALL BE PROVIDED WITH A LOCKING ACCESS PANEL WHEN VALVES ARE LOCATED IN WALL. PROVIDE UNOBSTRUCTED ACCESS TO VALVES WHEN IN THE CEILING BY ACCESS PANEL OR LABELED CEILING TILE.
19. REFER TO STRUCTURAL DOCUMENTS FOR SAW CUTTING AND PATCHING OF EXISTING STRUCTURAL CONCRETE SLAB. FIELD VERIFY LOCATION OF EXISITNG FLOOR BEAMS/JOIST TO AVOID CORING OR SAW CUTTING OF EXISTING FLOOR STRUCTURAL ELEMENTS.
20. CUT, REPAIR, AND FINISH WALLS TO MATCH EXISTING WHERE NEW PIPING IS INSTALLED, CONCEALED IN WALLS.

TEXAS PARKS & WILDLIFE

FORD POWELL &CARSON
Architects & Planners, Inc.
Architecture
Planning
Preservation
Interior Design
1138 East Commerce Street
San Antonio, Texas 78205
210/226-1246
FPC# 92705

STATE OF TEXAS
MATTHEW E. BYNUM
122100
LICENSED
PROFESSIONAL ENGINEER
7-3-20
Alderson & Associates, Inc.
F-1008

ALDERSON & ASSOCIATES, INC.
MEP ENGINEERING | COMMISSIONING
7700 Torino St, Suite 101
San Antonio, TX 78250
Telephone: 210.614.1210
PROJECT # 17012

© 2020 Alderson & Associates, Inc. F-1008

TYLER STATE PARK
HEADQUARTERS REPLACEMENT PHASE 1
PROJECT NUMBER: 112741

DATE: 07/03/2020
DESIGNED BY: MMK
DRAWN BY: MMK
REVIEWED BY: MEB

no.	revision	date

SHEET TITLE
PLUMBING SYMBOLS & ABBREVIATIONS

SHEET NUMBER
P001

CONSTRUCTION DOCUMENTS

PATH: BIM 360://17-012 Tyler State Park Visitor Center Replacement/17012 Tyler – P19.rvt
DATE: 7/3/2020 4:07:26 PM

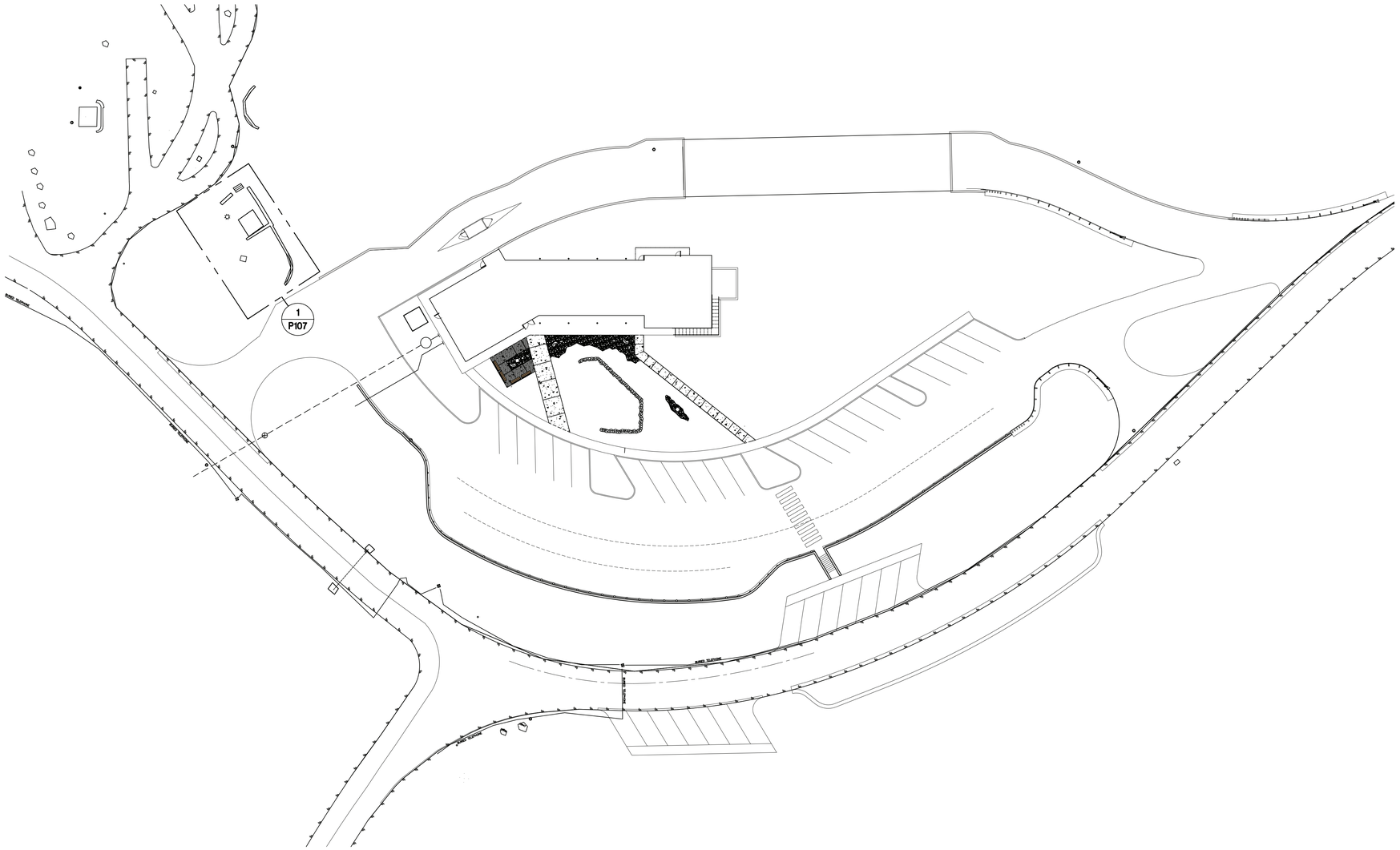

1 PLUMBING SITE PLAN
SCALE: 1" = 30'-0"

TRUE NORTH

TEXAS PARKS & WILDLIFE

FORD POWELL &CARSON
Architects & Planners, Inc.
Architecture
Planning
Preservation
Interior Design
1138 East Commerce Street
San Antonio, Texas 78205
210/226-1246
FPC# 92705

STATE OF TEXAS
MATTHEW E. BYNUM
122100
LICENSED
PROFESSIONAL ENGINEER
7-3-20
Alderson & Associates, Inc.
F-1008

ALDERSON & ASSOCIATES, INC.
MEP ENGINEERING | COMMISSIONING
7700 Torino St. Suite 101
San Antonio, TX 78229
Telephone: 210.614.1110
© 2020 Alderson & Associates, Inc. F-1008

PROJECT # 17012

TYLER STATE PARK

HEADQUARTERS REPLACEMENT PHASE 1

PROJECT NUMBER: 112741

DATE: 07/03/2020
DESIGNED BY: MMK
DRAWN BY: MMK
REVIEWED BY: MEB

no.	revision	date

SHEET TITLE
PLUMBING SITE PLAN

SHEET NUMBER
PS101

CONSTRUCTION DOCUMENTS

DATE: 7/2/2020 4:08:00 PM
PATH: BIM 360://17-012 Tyler State Park Visitor Center Replacement/17012 Tyler - P19.rvt

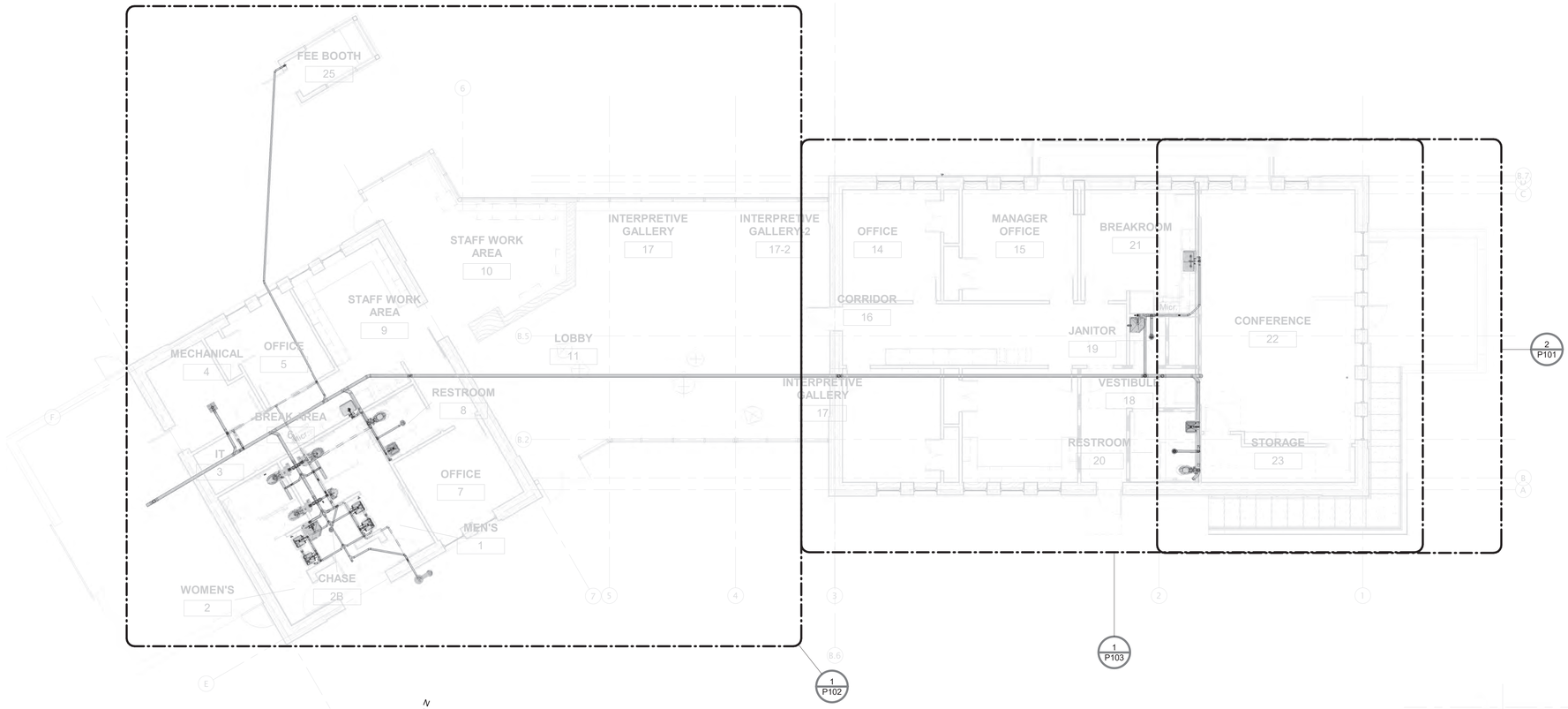

1 PLUMBING FLOOR PLAN - 1ST FLOOR - GRAVITY
SCALE: 1/8" = 1'-0"

TRUE NORTH

KEYED NOTES (THIS SHEET ONLY)

1. FRENCH DRAIN PIPING, UNDERGROUND.
2. CONNECT FRENCH DRAIN PIPING TO CIVIL STORM WATER PIPING AT THIS LOCATION.
3. SUMP PUMP DRAIN PIPING UP TO LEVEL ABOVE. RE: P103 FOR CONTINUATION
4. ALL ABOVE FLOOR SANITARY PIPING SHALL BE CAST IRON (TYP.) COORDINATE ROUTING WITH ALL OTHER TRADES INCLUDING ARCHITECTURAL AND STRUCTURAL.
5. ROUTE 3" SANITARY DRAIN LINE FROM HUB DRAIN IN FLOOR TO SUMP PIT. RE: #10/P401

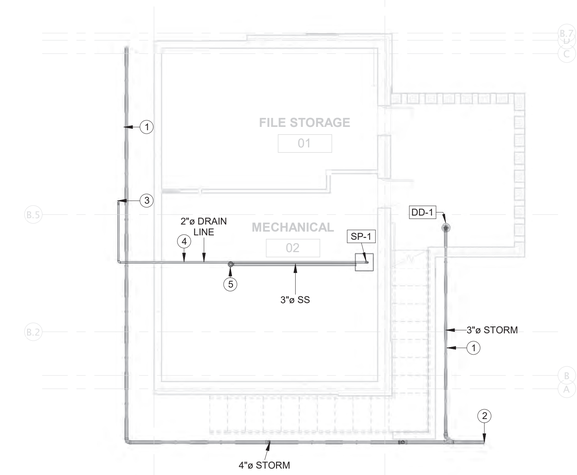

2 PLUMBING FLOOR PLAN - BASEMENT - GRAVITY
SCALE: 1/8" = 1'-0"

TRUE NORTH

TEXAS PARKS & WILDLIFE

FORD POWELL & CARSON
Architects & Planners, Inc.
Architecture
Planning
Preservation
Interior Design
1138 East Commerce Street
San Antonio, Texas 78205
210/226-1246
FPC# 92705

STATE OF TEXAS
MATTHEW E. BYNUM
122100
LICENSED
PROFESSIONAL ENGINEER
13-20
Alderson & Associates, Inc.
F-1008

ALDERSON & ASSOCIATES, INC.
MEP ENGINEERING | COMMISSIONING
7700 Torino St. Suite 101
San Antonio, TX 78229
Telephone: 210.614.1110
© 2020 Alderson & Associates, Inc. F-1008

PROJECT # 17012

TYLER STATE PARK
HEADQUARTERS REPLACEMENT PHASE 1
PROJECT NUMBER: 112741

DATE: 07/03/2020
DESIGNED BY: MMK
DRAWN BY: MMK
REVIEWED BY: MEB

no.	revision	date

SHEET TITLE
PLUMBING FLOOR PLAN - GRAVITY

SHEET NUMBER
P101

CONSTRUCTION DOCUMENTS

PATH: BIM 360://17-012 Tyler State Park Visitor Center Replacement/17012 Tyler - P19.rvt
DATE: 7/2/2020 4:07:34 PM



KEYED NOTES (THIS SHEET ONLY)

1. ALL SANITARY PIPING ROUTED UNDER FLOOR.
2. 4" SANITARY MAIN ROUTED UNDERFLOOR. RE: P103 FOR CONTINUATION.
3. ALL VENT PIPING ROUTED ABOVE CEILING. COORDINATE ROUTING WITH ALL OTHER TRADES.
4. 4" SANITARY MAIN ROUTED OUT OF BUILDING. SANITARY INVERT IS 5'-0" B.F.F. PROVIDE ACCESSIBLE TWO WAY CLEAN OUT. REFER TO CIVIL PLANS FOR CONTINUATION OF SANITARY MAIN.
5. 3" VENT THROUGH ROOF. COORDINATE PENETRATION WITH STRUCTURE.
6. WALL CLEANOUT TO BE ALIGNED OVER WATER CLOSET ON CHASE WALL. RE: #2/P401 FOR CLEANOUT REQUIREMENTS. FLUSH VALVE AND CLEANOUT TO BE COORDINATED WITH GRAB BAR HEIGHT. FLUSH VALVES MUST MEET ADA REQUIREMENTS. REFER TO ARCHITECTURAL PLANS FOR HEIGHT AND LOCATIONS OF GRAB BARS.
7. PROVIDE OUTDOOR-PROOF CLEAN OUT. RE: #7/P401 FOR DETAIL.

1 PLUMBING ENLARGED FLOOR PLAN - AREA A - GRAVITY
SCALE: 1/4" = 1'-0"

TRUE NORTH

TEXAS PARKS & WILDLIFE

FORD POWELL & CARSON
Architects & Planners, Inc.
Architecture
Planning
Preservation
Interior Design
1138 East Commerce Street
San Antonio, Texas 78205
210/226-1246
FPC# 92705

STATE OF TEXAS
MATTHEW E. BYNUM
122100
LICENSED
PROFESSIONAL ENGINEER
7-3-20
Alderson & Associates, Inc.
F-1008

ALDERSON & ASSOCIATES, INC.
MEP ENGINEERING | COMMISSIONING
7700 Torino St, Suite 101
San Antonio, TX 78229
Telephone: 210.614.1110
© 2020 Alderson & Associates, Inc. F-1008
PROJECT # 17012

TYLER STATE PARK
HEADQUARTERS REPLACEMENT PHASE 1
PROJECT NUMBER: 112741

DATE: 07/03/2020
DESIGNED BY: MMK
DRAWN BY: MMK
REVIEWED BY: MEB

no.	revision	date

SHEET TITLE
PLUMBING ENLARGED FLOOR PLAN - AREA A - GRAVITY

SHEET NUMBER
P102

CONSTRUCTION DOCUMENTS

PATH: BIM 360://17-012 Tyler State Park Visitor Center Replacement/17012 Tyler – P19.rvt
DATE: 7/2/2020 4:07:39 PM

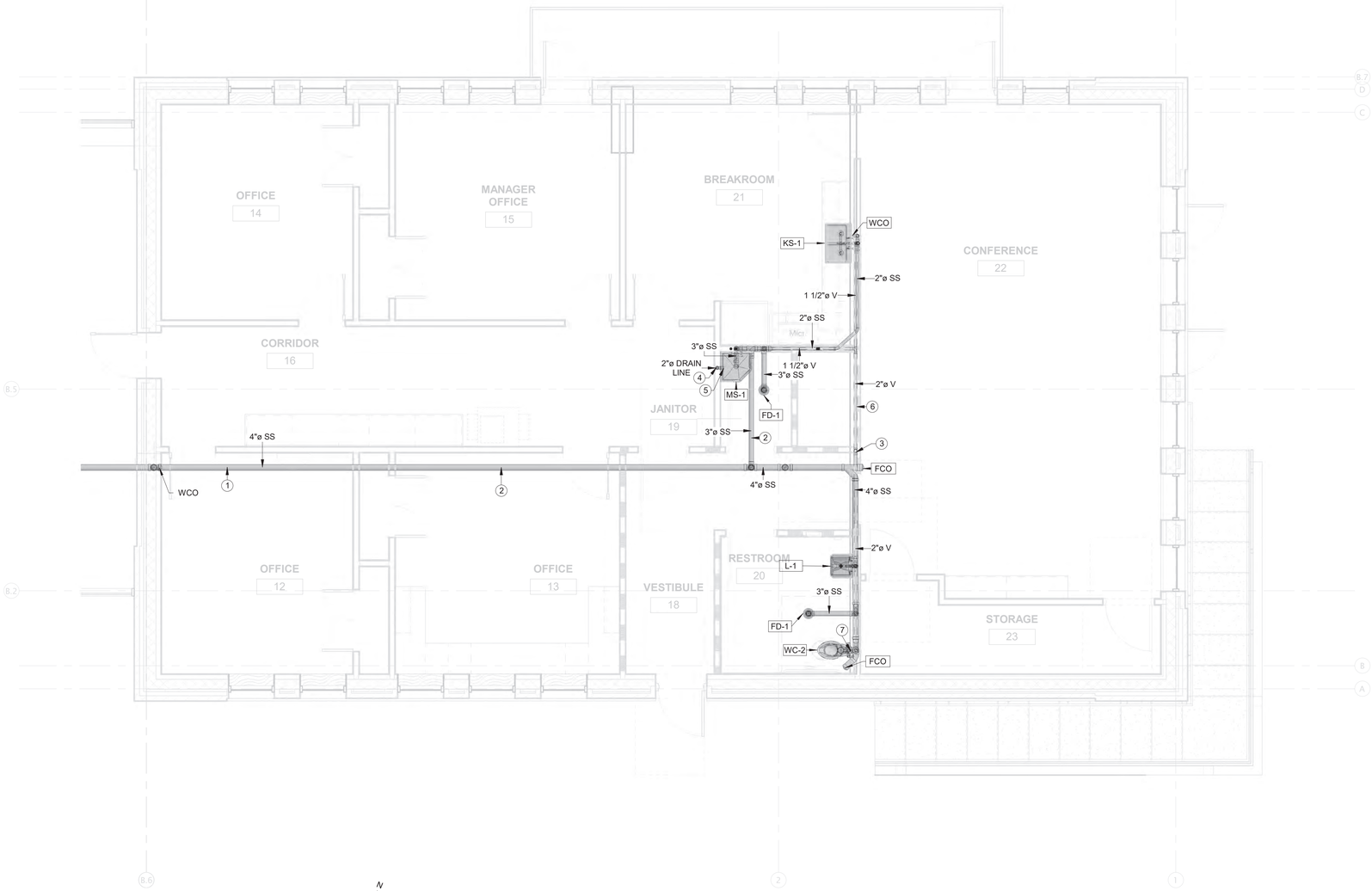

KEYED NOTES (THIS SHEET ONLY)

1. 4" SANITARY MAIN ROUTED UNDERFLOOR. RE: P102 FOR CONTINUATION.
2. ALL SANITARY PIPING ROUTED UNDER FLOOR.
3. 2-1/2" VENT THROUGH ROOF. COORDINATE PENETRATION WITH STRUCTURE.
4. 2" DRAIN PIPING. RE: #2/P101 FOR CONTINUATION.
5. DRAIN PIPE ROUTED TO MOP SINK BASIN.
6. ALL VENT PIPING ROUTED ABOVE CEILING. COORDINATE ROUTING WITH ALL OTHER TRADES.
7. WALL CLEANOUT TO BE ALIGNED OVER WATER CLOSET ON CHASE WALL. RE: #2/P401 FOR CLEANOUT REQUIREMENTS. FLUSH VALVE AND CLEANOUT TO BE COORDINATED WITH GRAB BAR HEIGHT. FLUSH VALVES MUST MEET ADA REQUIREMENTS. REFER TO ARCHITECTURAL PLANS FOR HEIGHT AND LOCATIONS OF GRAB BARS.

N

1 PLUMBING ENLARGED FLOOR PLAN - AREA B - GRAVITY
SCALE: 1/4" = 1'-0"

TRUE NORTH

TEXAS PARKS & WILDLIFE

FORD POWELL & CARSON
Architects & Planners, Inc.
Architecture
Planning
Preservation
Interior Design
1138 East Commerce Street
San Antonio, Texas 78205
210/226-1246
FPC# 92705

STATE OF TEXAS
MATTHEW E. BYNUM
122100
LICENSED
PROFESSIONAL ENGINEER
13-20
Alderson & Associates, Inc.
F-1008

ALDERSON & ASSOCIATES, INC.
MEP ENGINEERING | COMMISSIONING
7700 Torino St, Suite 101
San Antonio, TX 78250
Telephone: 210.614.1110
© 2020 Alderson & Associates, Inc. F-1008
PROJECT # 17012

TYLER STATE PARK
HEADQUARTERS REPLACEMENT PHASE 1
PROJECT NUMBER: 112741

DATE: 07/03/2020
DESIGNED BY: MMK
DRAWN BY: MMK
REVIEWED BY: MEB

no.	revision	date

SHEET TITLE
PLUMBING ENLARGED FLOOR PLAN - AREA B - GRAVITY

SHEET NUMBER
P103

CONSTRUCTION DOCUMENTS

PATH: BIM 360://17-012 Tyler State Park Visitor Center Replacement/17012 Tyler – P19.rvt
DATE: 7/2/2020 4:07:43 PM

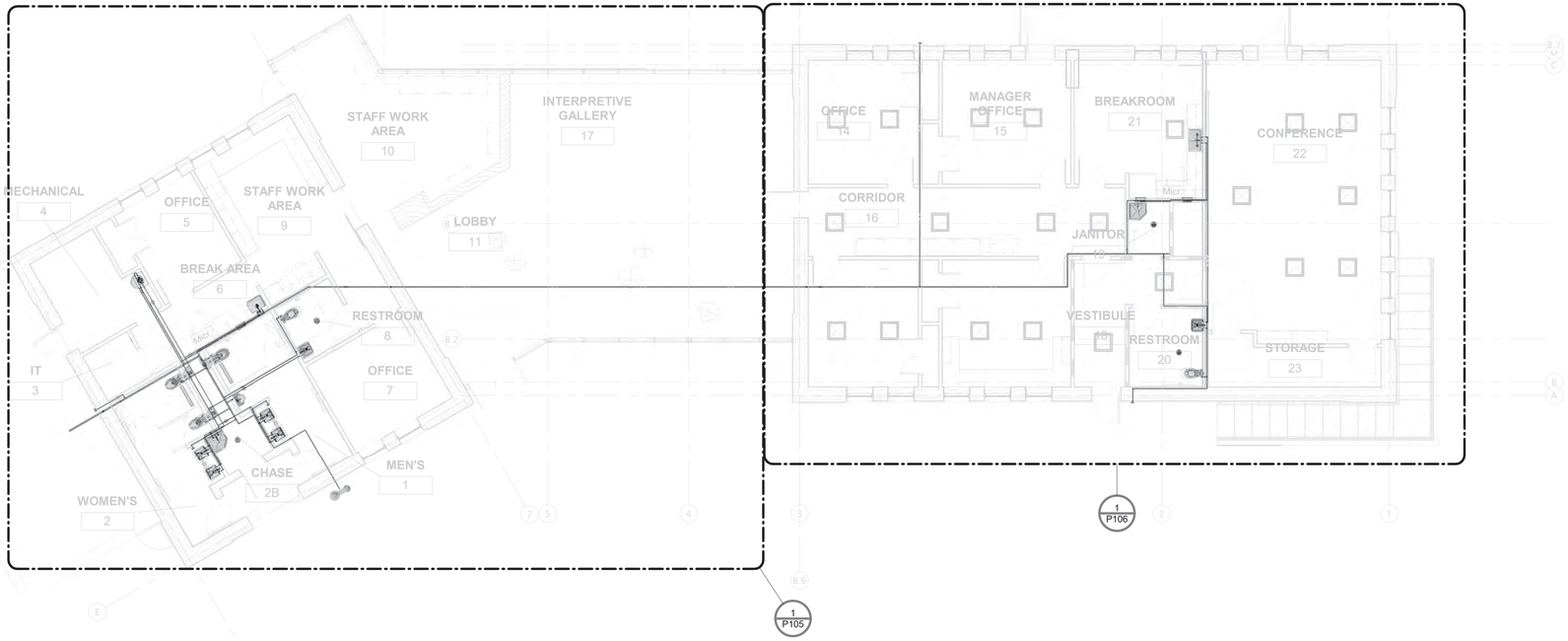

1 PLUMBING FLOOR PLAN - 1ST FLOOR - PRESSURE
SCALE: 1/8" = 1'-0"
TRUE NORTH

KEYED NOTES (THIS SHEET ONLY)

1 3/4" HOT WATER PIPE UP TO LEVEL ABOVE. RE: P106 FOR CONTINUATION.
2 3/4" HOT WATER RECIRCULATION PIPE UP TO LEVEL ABOVE. RE: P106 FOR CONTINUATION.
3 3/4" CW & HW PIPES SERVING WATER HEATER. RE: #4/P401 FOR WATER HEATER CONNECTION REQUIREMENTS.

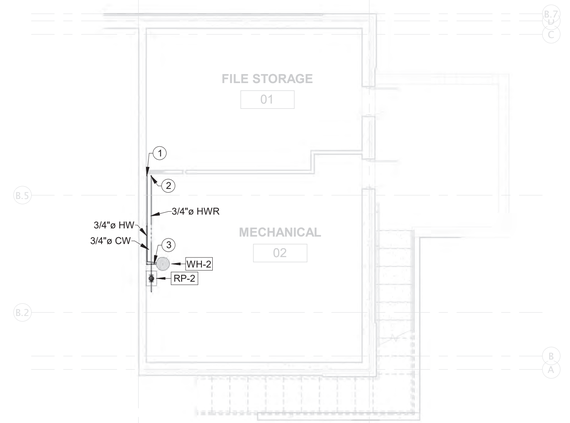

2 PLUMBING FLOOR PLAN - BASEMENT - PRESSURE
SCALE: 1/8" = 1'-0"
TRUE NORTH

TEXAS PARKS & WILDLIFE

FORD POWELL &CARSON
Architects & Planners, Inc.
Architecture
Planning
Preservation
Interior Design
1138 East Commerce Street
San Antonio, Texas 78205
210/226-1246
FPC# 92705

STATE OF TEXAS
MATTHEW E. BYNUM
122100
LICENSED
PROFESSIONAL ENGINEER
13-20
Alderson & Associates, Inc.
F-1008

ALDERSON ASSOCIATES, INC.
MEP ENGINEERING | COMMISSIONING
7700 Torino St. Suite 101
San Antonio, TX 78229
Telephone: 210.614.1210
© 2020 Alderson & Associates, Inc. F-1008

PROJECT # 17012

TYLER STATE PARK
HEADQUARTERS REPLACEMENT PHASE 1
PROJECT NUMBER: 112741

DATE: 07/03/2020
DESIGNED BY: MMK
DRAWN BY: MMK
REVIEWED BY: MEB

no.	revision	date

SHEET TITLE
PLUMBING FLOOR PLAN - PRESSURE

SHEET NUMBER
P104

CONSTRUCTION DOCUMENTS

PATH: BIM 360://17-012 Tyler State Park Visitor Center Replacement/17012 Tyler - P19.rvt
DATE: 7/2/2020 4:07:48 PM

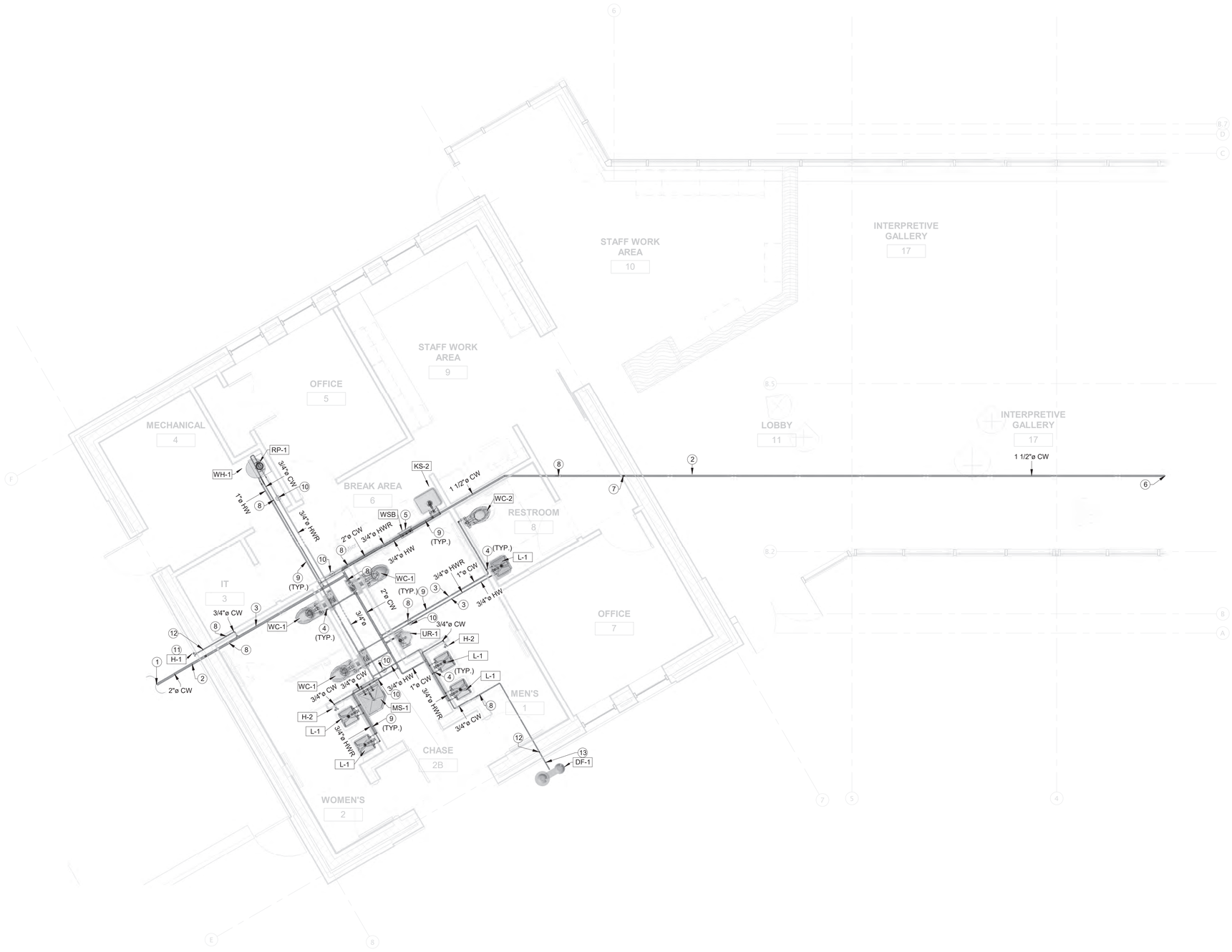

KEYED NOTES (THIS SHEET ONLY)

1. 2" DOMESTIC WATER MAIN ROUTED INTO BUILDING. REFER TO CIVIL PLANS FOR CONTINUATION.
2. DOMESTIC WATER PIPING ROUTED UNDERFLOOR. PIPING SHALL BE PEX. COORDINATE ROUTING WITH ALL TRADES.
3. DOMESTIC WATER PIPING ROUTED ABOVE CEILING. COORDINATE ROUTING WITH ALL TRADES.
4. WATER PIPING ROUTED ALONG WALL, CONNECT TO FIXTURE(S) AS REQUIRED. REFER TO RISER AND FIXTURE SCHEDULES FOR SIZING AND ROUTING TO EACH FIXTURE. COORDINATE ROUTING WITH ALL OTHER TRADES INCLUDING ARCHITECTURAL AND STRUCTURAL.
5. WATER SUPPLY BOX FOR REFRIGERATOR ICE MAKER CONNECTION OR COFFEE MAKER CONNECTION. MOUNT WATER SUPPLY BOX IN ACCORDANCE WITH MANUFACTURER'S REQUIREMENTS. INCLUDE BACKFLOW PREVENTER ON COLD WATER LINE, ZURN Z80000-EVB OR APPROVED EQUAL.
6. 1-1/2" DOMESTIC COLD WATER MAIN ROUTED UNDERGROUND. RE: P106 FOR CONTINUATION.
7. ROUTE 1-1/2" DOMESTIC COLD WATER MAIN IN WALL FROM ABOVE CEILING TO UNDERFLOOR AT THIS LOCATION.
8. ISOLATION VALVE ON DOMESTIC WATER SUPPLY LINE. PROVIDE LOCKING ACCESS PANEL WHEN VALVE IS LOCATED IN WALL. PROVIDE ACCESS PANEL IN CEILING WHEN VALVE IS LOCATED ABOVE HARD CEILING. PROVIDE LABELED CEILING TILE WHEN VALVE IS LOCATED ABOVE LAY-IN CEILING. VALVE SHALL HAVE UNOBSTRUCTED ACCESS. RE: #4/P402 FOR LOCKING ACCESS PANEL REQUIREMENTS.
9. PROVIDE SHOCK ARRESTOR IN COLD & HOT WATER LINES. SIZE PER SHOCK ARRESTOR SCHEDULE ON SHEET P301. PROVIDE FRAMED WALL ACCESS PANEL TO ALLOW SERVICE TO SHOCK ARRESTOR.
10. CIRCUIT SETTER AND CHECK VALVE ON HOT WATER RECIRCULATION LINE. CIRCUIT SETTER SHALL BE SET TO 0.25GPM. PROVIDE LOCKING ACCESS PANEL WHEN VALVE IS LOCATED IN WALL. PROVIDE ACCESS PANEL IN CEILING WHEN VALVE IS LOCATED ABOVE HARD CEILING. PROVIDE LABELED CEILING TILE WHEN VALVE IS LOCATED ABOVE LAY-IN CEILING. VALVE SHALL HAVE UNOBSTRUCTED ACCESS. RE: #4/P-302 FOR LOCKING ACCESS PANEL REQUIREMENTS.
11. RE: #9/P402 FOR WALL HYDRANT INSTALLATION REQUIREMENTS. REFER TO RISER AND FIXTURE SCHEDULE FOR ROUTING TO WALL HYDRANT. COORDINATE ROUTING WITH ALL OTHER TRADES INCLUDING ARCHITECTURAL AND STRUCTURAL.
12. ROUTE 3/4" DOMESTIC COLD WATER IN WALL FROM ABOVE CEILING TO UNDERFLOOR AT THIS LOCATION.
13. WATER PIPING ROUTED TO DRINKING FOUNTAIN. REFER TO RISER AND FIXTURE SCHEDULE FOR SIZING AND ROUTING TO FOUNTAIN. COORDINATE ROUTING WITH ALL OTHER TRADES INCLUDING ARCHITECTURAL AND STRUCTURAL.

1 PLUMBING ENLARGED FLOOR PLAN - AREA A - PRESSURE

SCALE: 1/4" = 1'-0"

TRUE NORTH

TEXAS PARKS & WILDLIFE

FORD POWELL & CARSON
Architects & Planners, Inc.
Architecture
Planning
Preservation
Interior Design
1138 East Commerce Street
San Antonio, Texas 78205
210/226-1246
FPC# 92705

STATE OF TEXAS
MATTHEW E. BYNUM
122100
LICENSED
PROFESSIONAL ENGINEER
7-3-20
Alderson & Associates, Inc.
F-1008

ALDERSON ASSOCIATES, INC.
MEP ENGINEERING | COMMISSIONING
7700 Torino St, Suite 101
San Antonio, TX 78229
Telephone: 210.614.1210

© 2020 Alderson & Associates, Inc. F-1008

PROJECT # 17012

TYLER STATE PARK
HEADQUARTERS REPLACEMENT PHASE 1
PROJECT NUMBER: 112741

DATE: 07/03/2020
DESIGNED BY: MMK
DRAWN BY: MMK
REVIEWED BY: MEB

no.	revision	date

SHEET TITLE
PLUMBING ENLARGED FLOOR PLAN - AREA A - PRESSURE

SHEET NUMBER
P105

CONSTRUCTION DOCUMENTS

PATH: BIM 360://17-012 Tyler State Park Visitor Center Replacement/17012 Tyler – P19.rvt
DATE: 7/2/2020 4:07:52 PM

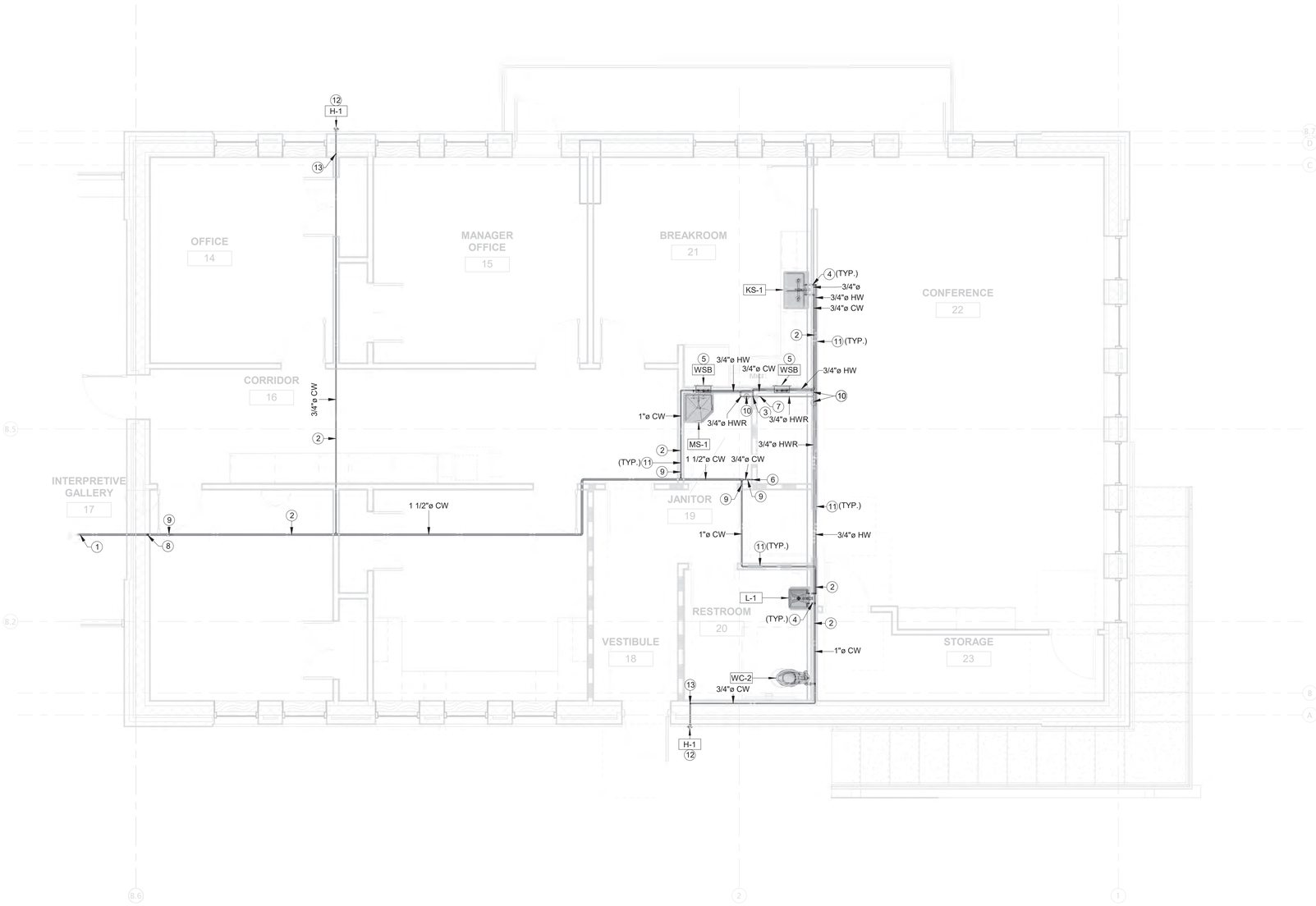

KEYED NOTES (THIS SHEET ONLY)

1. 1-1/2" DOMESTIC COLD WATER MAIN ROUTED UNDERGROUND. RE: P105 FOR CONTINUATION.
2. DOMESTIC WATER PIPING ROUTED ABOVE CEILING. COORDINATE ROUTING WITH ALL TRADES.
3. 3/4" HOT WATER PIPE UP FROM LEVEL BELOW. RE: #2/P104 FOR CONTINUATION.
4. WATER PIPING ROUTED ALONG WALL, CONNECT TO FIXTURE(S) AS REQUIRED. REFER TO RISER AND FIXTURE SCHEDULES FOR SIZING AND ROUTING TO EACH FIXTURE. COORDINATE ROUTING WITH ALL OTHER TRADES INCLUDING ARCHITECTURAL AND STRUCTURAL.
5. WATER SUPPLY BOX FOR REFRIGERATOR ICE MAKER CONNECTION OR COFFEE MAKER CONNECTION. MOUNT WATER SUPPLY BOX IN ACCORDANCE WITH MANUFACTURER'S REQUIREMENTS. INCLUDE BACKFLOW PREVENTER ON COLD WATER LINE, ZURN Z80000-EVB OR APPROVED EQUAL.
6. 3/4" COLD WATER PIPE DOWN TO LEVEL BELOW. RE: #2/P104 FOR CONTINUATION.
7. 3/4" HOT WATER RECIRCULATION PIPE UP FROM LEVEL BELOW. RE: #2/P104 FOR CONTINUATION.
8. ROUTE 1-1/2" DOMESTIC COLD WATER MAIN IN WALL FROM UNDERFLOOR TO ABOVE CEILING AT THIS LOCATION.
9. ISOLATION VALVE ON DOMESTIC WATER SUPPLY LINE. PROVIDE LOCKING ACCESS PANEL WHEN VALVE IS LOCATED IN WALL. PROVIDE ACCESS PANEL IN CEILING WHEN VALVE IS LOCATED ABOVE HARD CEILING. PROVIDE LABELED CEILING TILE WHEN VALVE IS LOCATED ABOVE LAY-IN CEILING. VALVE SHALL HAVE UNOBSTRUCTED ACCESS. RE: #4/P402 FOR LOCKING ACCESS PANEL REQUIREMENTS.
10. CIRCUIT SETTER AND CHECK VALVE ON HOT WATER RECIRCULATION LINE. CIRCUIT SETTER SHALL BE SET TO 0.25GPM. PROVIDE LOCKING ACCESS PANEL WHEN VALVE IS LOCATED IN WALL. PROVIDE ACCESS PANEL IN CEILING WHEN VALVE IS LOCATED ABOVE HARD CEILING. PROVIDE LABELED CEILING TILE WHEN VALVE IS LOCATED ABOVE LAY-IN CEILING. VALVE SHALL HAVE UNOBSTRUCTED ACCESS. RE: #4/P-302 FOR LOCKING ACCESS PANEL REQUIREMENTS.
11. PROVIDE SHOCK ARRESTOR IN COLD & HOT WATER LINES. SIZE PER SHOCK ARRESTOR SCHEDULE ON SHEET P301. PROVIDE FRAMED WALL ACCESS PANEL TO ALLOW SERVICE TO SHOCK ARRESTOR.
12. RE: #9/P402 FOR WALL HYDRANT INSTALLATION REQUIREMENTS. REFER TO RISER AND FIXTURE SCHEDULE FOR ROUTING TO WALL HYDRANT. COORDINATE ROUTING WITH ALL OTHER TRADES INCLUDING ARCHITECTURAL AND STRUCTURAL.
13. ROUTE 3/4" DOMESTIC COLD WATER IN WALL FROM ABOVE CEILING TO UNDERFLOOR AT THIS LOCATION.

1 PLUMBING ENLARGED FLOOR PLAN - AREA B - PRESSURE

SCALE: 1/4" = 1'-0"

TRUE NORTH

TEXAS PARKS & WILDLIFE

FORD POWELL &CARSON
Architects & Planners, Inc.
Architecture
Planning
Preservation
Interior Design
1138 East Commerce Street
San Antonio, Texas 78205
210/226-1246
FPC# 92705

STATE OF TEXAS
MATTHEW E. BYNUM
122100
LICENSED
PROFESSIONAL ENGINEER
3-20
Alderson & Associates, Inc.
F-1008

ALDERSON & ASSOCIATES, INC.
MEP ENGINEERING | COMMISSIONING
7700 Torino St, Suite 101
San Antonio, TX 78229
Telephone: 210.614.1210
© 2020 Alderson & Associates, Inc. F-1008

PROJECT # 17012

TYLER STATE PARK
HEADQUARTERS REPLACEMENT PHASE 1
PROJECT NUMBER: 112741

DATE: 07/03/2020
DESIGNED BY: MMK
DRAWN BY: MMK
REVIEWED BY: MEB

no.	revision	date

SHEET TITLE
PLUMBING ENLARGED FLOOR PLAN - AREA B - PRESSURE

SHEET NUMBER
P106

CONSTRUCTION DOCUMENTS

PATH: BIM 360://17-012 Tyler State Park Visitor Center Replacement/17012 Tyler – P19.rvt
DATE: 7/2/2020 4:07:55 PM

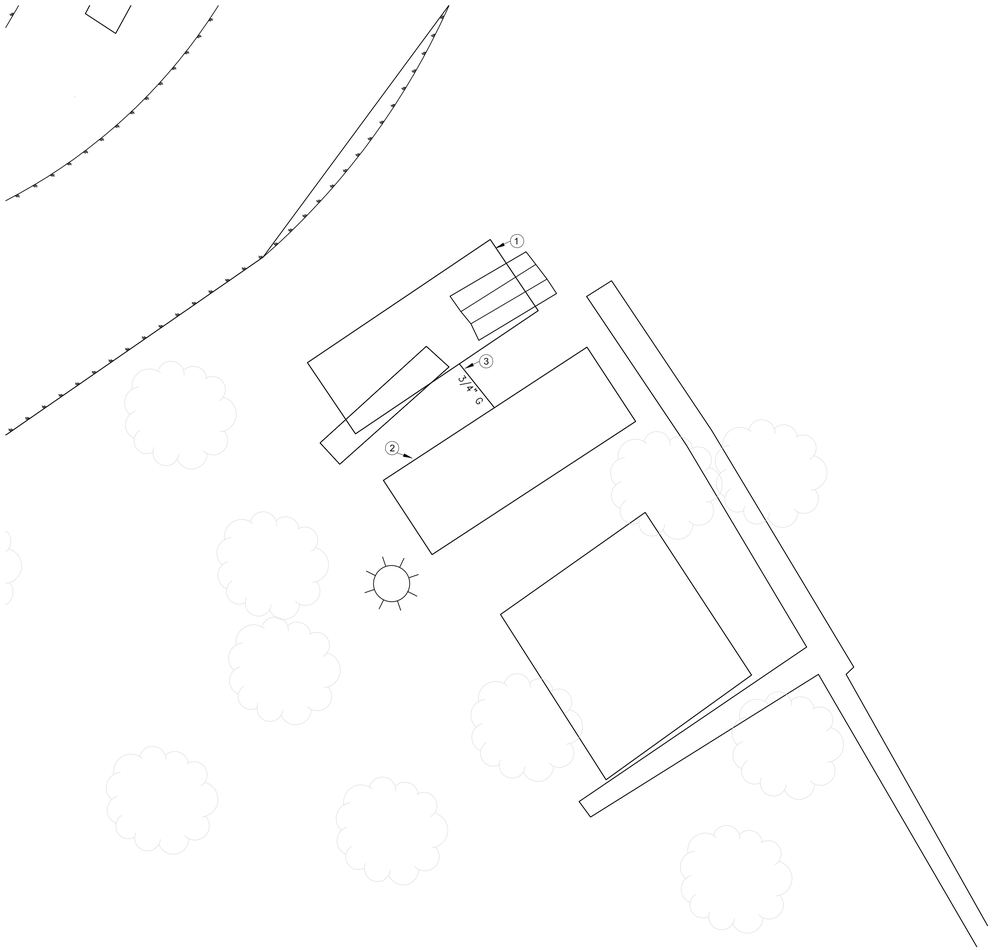

KEYED NOTES (THIS SHEET ONLY)

1 GENERATOR. RE: ELECTRICAL DRAWINGS.

2 1000 GAL PROPANE TANK, UNDERGROUND PER STATE OF TEXAS RAILROAD COMMISSION REQUIREMENTS. PROVIDE CORROSION PROTECTION SEALED BY A REGISTERED CORROSION PROTECTION ENGINEER, NACE CERTIFIED. CONTRACTOR SHALL BE RESPONSIBLE FOR TAKING SOIL SAMPLES TO DETERMINE REQUIREMENTS. PROVIDE DETECTABLE TAPE ALONG EDGES OF TANK BELOW GROUND AND TRACING PIPING TO GENERATOR. PROVIDE SHOP DRAWINGS. PROVIDE HOLD DOWN CONCRETE FOUNDATION AND STRAPS. RE: #11/P402 FOR DETAIL.

3 ROUTE 3/4" GAS PIPING FROM PROPANE TANK TO GENERATOR. COORDINATE ROUTING WITH ON-SITE CONDITIONS.

MEP GAS LOAD (2PSI) TABULATION SCHEDULE		
EQUIPMENT	LOAD IN CFH	GPR OUTLET PRESSURE
GENERATOR	430	7" W.C.
ACTUAL DEVELOPED LENGTH=20 FT. (SIZING BASED ON ON 20 FT 2PSI @ 0.5 PRESSURE DROP.)	NOTE: PROVIDE GAS REGULATOR TO EQUIPMENT OR ON MAIN BRANCH SERVING EQUIPMENT	
TOTAL	430 CFH	

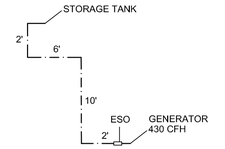

NOTES:

1. GAS PRESSURE REGULATORS (GPR) SHALL BE EQUIPPED WITH SCREENED VENT OPENINGS ORIENTED TO PREVENT THE ENTRANCE OF WATER OR OTHER FOULING MATERIALS. WHEN LOCATED INSIDE THE BUILDING VENTS SHALL BE PIPED TO THE BUILDING ROOF AND TERMINATED WITH A SCREENED OUTLET 90° ELBOW FITTING POINTED DOWNWARD. PROVIDE LINE SIZE PLUG OR BALL VALVE AND UNION ON INLET; AND TEE WITH TEST COCK DOWNSTREAM OF ALL REGULATOR ASSEMBLIES.
2. ALL GAS PIPE BELOW GRADE AND BELOW CONCRETE SLAB ABUTTING THE BUILDING BASE SLAB SHALL BE RUN IN A CONTINUOUS SLEEVE. SLEEVES SHALL BE OPEN AT EACH END. BURIED END; A MINIMUM OF 5'-0" BEYOND THE EDGE OF THE CONCRETE SLAB, AND ABOVE GRADE END; BELOW THE POINT OF ENTRY TO THE BUILDING ADJACENT TO REGULATORS OR ISOLATION VALVES WITH A GOOSENECK VENT.
3. GAS SLEEVES SHALL BE SCH 40 PVC BELOW GRADE AND WELDED SCH 40 STEEL ABOVE GRADE.
4. SLEEVES VENTED ABOVE GRADE SHALL BE GOOSENECK ASSEMBLIES WITH SCREENED INLETS AND SHALL BE SECURED IN A VANDAL PROOF MANNER.
4. NOTE: PIPE SIZING BASED ON 2018 IFGC, TABLE 402.4(2), AT DEVELOPED LENGTH OF 20 FT, INLET PRESSURE < 2.0 psi.

N

1 PLUMBING ENLARGED FLOOR PLAN - GENERATOR AREA

SCALE: 1/4" = 1'-0"

TRUE NORTH

TEXAS PARKS & WILDLIFE

FORD POWELL &CARSON
Architects & Planners, Inc.
Architecture
Planning
Preservation
Interior Design
1138 East Commerce Street
San Antonio, Texas 78205
210/226-1246
FPC# 92705

STATE OF TEXAS
MATTHEW E. BYNUM
122100
LICENSED
PROFESSIONAL ENGINEER
13-20
Alderson & Associates, Inc.
F-1008

ALDERSON & ASSOCIATES, INC
MEP ENGINEERING | COMMISSIONING
7700 Torino St, Suite 101
San Antonio, TX 78229
Telephone: 210.614.1110
© 2020 Alderson & Associates, Inc. F-1008

PROJECT # 17012

TYLER STATE PARK
HEADQUARTERS REPLACEMENT PHASE 1
PROJECT NUMBER: 112741

DATE: 07/03/2020
DESIGNED BY: MMK
DRAWN BY: MMK
REVIEWED BY: MEB

no.	revision	date

SHEET TITLE
PLUMBING ENLARGED FLOOR PLAN - GENERATOR AREA

SHEET NUMBER
P107

CONSTRUCTION DOCUMENTS

PATH: BIM 360://17-012 Tyler State Park Visitor Center Replacement/17012 Tyler – P19.rvt
DATE: 7/2/2020 4:07:56 PM

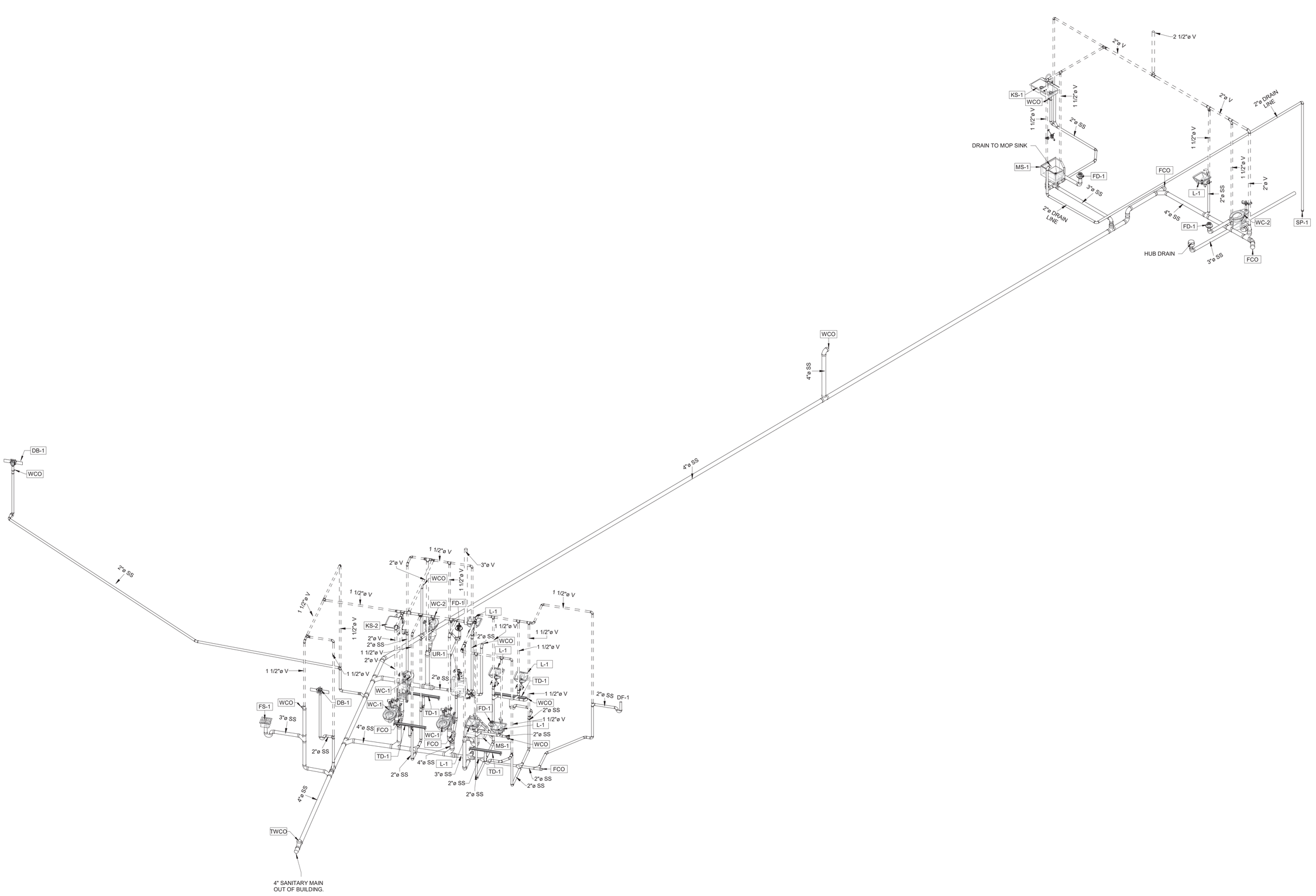

1 RISER DIAGRAM SANITARY & VENT
SCALE:

TEXAS PARKS & WILDLIFE

FORD POWELL &CARSON
Architects & Planners, Inc.
Architecture
Planning
Preservation
Interior Design
1138 East Commerce Street
San Antonio, Texas 78205
210/226-1246
FPC# 92705

STATE OF TEXAS
MATTHEW E. BYNUM
122100
LICENSED
PROFESSIONAL ENGINEER
7-3-20
Alderson & Associates, Inc.
F-1008

ALDERSON & ASSOCIATES, INC.
MEP ENGINEERING | COMMISSIONING
7700 Torino St, Suite 101
San Antonio, TX 78229
Telephone: 210.614.1110
© 2020 Alderson & Associates, Inc. F-1008

PROJECT # 17012

TYLER STATE PARK
HEADQUARTERS REPLACEMENT PHASE 1
PROJECT NUMBER: 112741

DATE: 07/03/2020
DESIGNED BY: MMK
DRAWN BY: MMK
REVIEWED BY: MEB

no.	revision	date

SHEET TITLE
PLUMBING RISER DIAGRAM - GRAVITY

SHEET NUMBER
P201

CONSTRUCTION DOCUMENTS

PATH: BIM 360://17-012 Tyler State Park Visitor Center Replacement/17012 Tyler – P19.rvt
DATE: 7/2/2020 4:07:58 PM

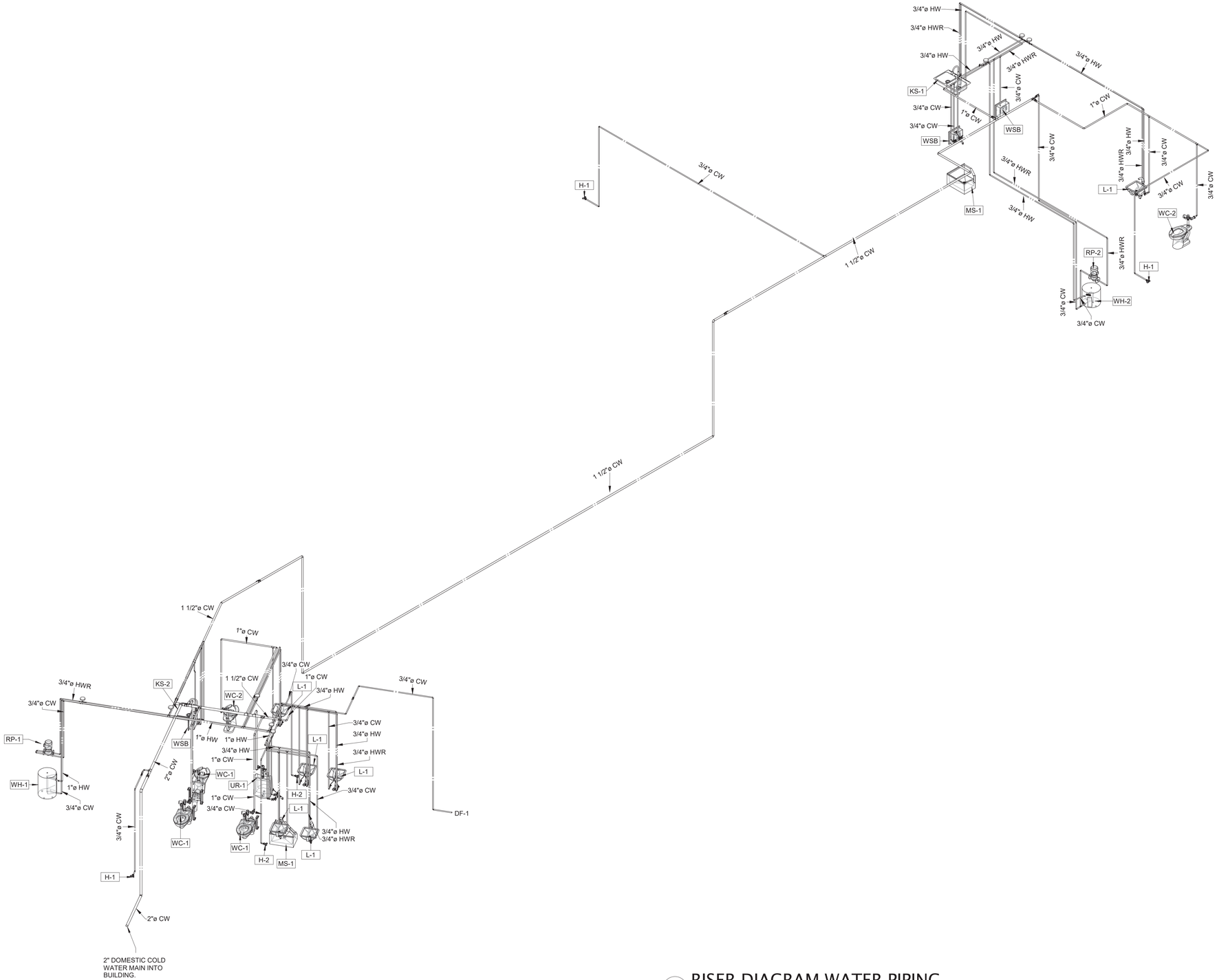

1 RISER DIAGRAM WATER PIPING
SCALE:

TEXAS PARKS & WILDLIFE

FORD POWELL &CARSON
Architects & Planners, Inc.
Architecture
Planning
Preservation
Interior Design
1138 East Commerce Street
San Antonio, Texas 78205
210/226-1246
FPC# 92705

STATE OF TEXAS
MATTHEW E. BYNUM
122100
LICENSED
PROFESSIONAL ENGINEER
3-20
Alderson & Associates, Inc.
F-1008

ALDERSON & ASSOCIATES, INC
MEP ENGINEERING | COMMISSIONING
7700 Torino St, Suite 101
San Antonio, TX 78223
Telephone: 210.614.1110
© 2020 Alderson & Associates, Inc. F-1008

PROJECT # 17012

TYLER STATE PARK
HEADQUARTERS REPLACEMENT PHASE 1
PROJECT NUMBER: 112741

DATE: 07/03/2020
DESIGNED BY: MMK
DRAWN BY: MMK
REVIEWED BY: MEB

no.	revision	date

SHEET TITLE
PLUMBING RISER DIAGRAM - PRESSURE

SHEET NUMBER
P202

CONSTRUCTION DOCUMENTS

DATE: 7/2/2020 4:07:59 PM PATH: BIM 360://17-012 Tyler State Park Visitor Center Replacement/17012 Tyler - P19.rvt

PLUMBING FIXTURE SCHEDULE

Location	PRODUCTS		DESCRIPTION	ACCESSORIES	SAN	TRAP	VENT	HW	CW
WC-1	Toilet		Kohler #K-84325-SS, 'Kingston Ultra Top Spud Flushometer Bowl', Toilet, White finish, Vitreous china, Wall hung, Operates in the range of 1.1 US Gal to 1.6 US Gal (4.2 L to 6 L) per flush, Elongated bowl, Siphon jet flush action, Toilet seat not included.	Kohler #K-466-CA, 'Lustra, Elongated Commercial Heavy-Duty Toilet Seat', W hite finish, Solid polypropylene plastic with antimicrobial agent, Open front less cover, Check hinge. Sloan Royal #111-SFSM, 'Royal Sensor Flushometer', Polished Chrome finish, Exposed Sensor Flush Valve For Top Spud Toilet, 1.28 US Gal (4.8 L) per flush. Watts #ISCA-141-3, mounted on concrete floor single vertical, Adjustable Toilet Carrier. Champion MI-XHUB Coupling	4"	INTEGRAL	2"	-	1"
WC-2	Toilet		Kohler #K-96057-B, 'Highcliff Ultra Top Spud Flushometer Bowl', 16-1/2" high Toilet, White finish, Vitreous china, Floor mounted, Operates in the range of 1.1 US Gal to 1.6 US Gal (4.2 L to 6 L) per flush, Elongated bowl, Siphon jet flush action, Toilet seat not included.	Kohler #K-466-CA, 'Lustra, Elongated Commercial Heavy-Duty Toilet Seat', White finish, Solid polypropylene plastic with antimicrobial agent, Open front less cover, Check hinge. Sloan Royal #111-SFSM, 'Royal Sensor Flushometer', Polished Chrome finish, Exposed Sensor Flush Valve For Top Spud Toilet, 1.28 US Gal (4.8 L) per flush. Provide Floor Flange, (Same material as the connecting pipe drain), with all brass bolts and with rubber gasket.	4"	INTEGRAL	2"	-	1"
UR-1	Urinal		Kohler #K-4991-ER, 'Bardon High-Efficiency Urinal', White finish, Vitreous china, Wall hung, Operates in the range of 0.125 US Gal to 1.0 US Gal (0.5 L to 3.8 L) per flush, 14" extended rim, Strainer.	Sloan Royal #186-SFSM, 'Royal Sensor Flushometer', Polished Chrome finish, Exposed Sensor Flush Valve For Top Spud Urinal, 0.5 US Gal (1.9 L) per flush. Watts #CA-321, mounted on concrete floor, Fixture Carrier. Watts #CO-380-RD Urinal Wall Access Cleanout. Champion MI-XHUB Coupling	2"	INTEGRAL	1-1/2"	-	3/4"
L-1	Lavatory		Kohler #K-2882, ' Verticyl Rectangle Under-mount Bathroom Sink', White finish, Vitreous china, Undercounter mount, Overflow drain.	Kohler #K-13460, 'Sculpted Insight Touchless Faucet With Mixer, DC Powered', Polished Chrome finish, 0.5 US GPM (1.9LPM) maximum flow rate, Battery-powered. Powers #LFLM495, Point of Use Thermostatic Mixing Valve, integral check and screen prevents cross-flow and contamination. McGuire #155WCECO Offset Open Grid Drain. McGuire #LFBV170, polished brass Faucet Supplies. DXV #D35700020.100, Decorative P-Trap. McGuire 'PROWRAP' #PW2000WC Sanitary Covering.	2"	1-1/2"	1-1/2"	3/4"	3/4"
L-2	Lavatory		Kohler #K-2035-4, 'Pinoir Wall-mount Bathroom Sink', White finish, Vitreous china, Wall mount, Includes #K-2057 'Bathroom Sink Shroud', Overflow drain.	Kohler #K-13460, 'Sculpted Insight Touchless Faucet With Mixer, DC Powered', Polished Chrome finish, 0.5 US GPM (1.9LPM) maximum flow rate, Battery-powered. Powers #LFe480, Point of Use Thermostatic Mixing Valve, integral check with screen prevents cross flow and filter out debris. McGuire #155A Open Grid Drain. McGuire #LFBV170, polished brass Faucet Supplies. McGuire #8872CB, P-Trap. Watts #WCA-411-CA-481, Basin Carrier.	2"	1-1/2"	1-1/2"	3/4"	3/4"
KS-1	Sink		Kohler #K-RH20062, 'Ballad Under-mount Kitchen Sink', Premium 18-gauge stainless steel, Undercounter mount, Double-equal bowls.	Kohler #K-596, 'Simplice Pull-Down Kitchen Sink Faucet', Polished chrome finish, 1.5 US GPM (5.7 LPM) maximum flow rate, single handle faucet. Powers #LFLM495-1, Point of Use Thermostatic Mixing Valve, integral check and screen prevents cross-flow and contamination. McGuire #LFH170BV, polished brass Faucet Supplies. McGuire #8912CB, P-Trap.	2"	1-1/2"	1-1/2"	3/4"	3/4"
KS-2	Sink		Franke Commercial #UCS6105P-1, 'Single Bowl Under Counter Sink', 18-gauge stainless steel, Undercounter mount..	Kohler #K-596, 'Simplice Pull-Down Kitchen Sink Faucet', Polished chrome finish, 1.5 US GPM (5.7 LPM) maximum flow rate, single handle faucet. Powers #LFLM495-1, Point of Use Thermostatic Mixing Valve, integral check and screen prevents cross-flow and contamination. McGuire #LFH170BV, polished brass Faucet Supplies. McGuire #8912CB, P-Trap.	2"	1-1/2"	1-1/2"	3/4"	3/4"
MS-1	Sink		Stern Williams #SBC-1702, Service / Mop Sink.	Kohler #K-838T60-4A, 'Triton Boew Service Sink Faucet', Polished chrome finish, Solid brass, Wall-to-spout outlet with wall brace and pail hook. Stern Williams T-35 Hose and Wall Hook 36" (914 mm) long hose with 3/4" (19 mm) chrome coupling, stainless steel wall bracket. Stern Williams T-40 Mop Hanger stainless steel #4 finish, 24" (610 mm) long with 3 rubber spring loaded clips. Stern Williams BP Back Splash Panel 20 GA. (0.9 mm) type 304 stainless steel. Provide P-Trap.	3"	3"	1-1/2"	3/4"	3/4"
WSB	Drainage Specialty		Watts FS-890 Ice and Laundry Boxes.		-	-	-	-	3/4"
FD-1	Floor Drain		Watts FD-100-A5-6-7 Floor Drain, epoxy coated, cast iron body, reversible flashing clamp with primary and secondary weepholes, no hub outlet, vandal proof.	Watts -A5 Adjustable round strainer, adjustable round strainer, 5" (127 mm) diameter nickel bronze.	2"	INTEGRAL	1-1/2"	-	-
FS-1	Floor Sink		Watts FS-730 deep sanitary floor sink, enamel coated, cast iron body, no hub outlet, sediment bucke	Watts -A5 Adjustable round strainer, adjustable round strainer, 5" (127 mm) diameter nickel bronze.	3"	INTEGRAL	1-1/2"	-	-
TD-1	Trench Drain		Zurn ZS880 Floor Drain, epoxy coated, stainless steel linear drain, anti-ponding V-shaped channel with 2" No-Hub center outlet.	Watts -A5 Adjustable round strainer, adjustable round strainer, 5" (127 mm) diameter nickel bronze.	2"	INTEGRAL	1-1/2"	-	-
DD-1	Deck Drain		Watts FD-463-F-6 Floor Drain, epoxy coated, cast iron body, ductile iron, heel-proof square grate, no hub outlet, vandal proof, 3"Ø (76 mm).	Watts -A5 Adjustable round strainer, adjustable round strainer, 5" (127 mm) diameter nickel bronze.	3"	INTEGRAL	1-1/2"	-	-
FCO	Floor Cleanout		Zurn Z-1400		SIZE AS NOTED ON PLANS				
WCO	Wall Cleanout		JR Smith 4452C/4472T		SIZE AS NOTED ON PLANS				
H-1	Hose Bibb		Watts HY-725-K Hydrant,3/4"Ø (19 mm) hose connection,3/4"Ø (19 mm) female x 1"Ø (25 mm) male pipe connection,integral vacuum breaker,nickel bronze box and door,cylinder lock,unspecified.		-	-	-	-	3/4"
H-2	Hose Bibb		Watts HY-330 Hydrant,3/4"Ø (19 mm) hose connection,3/4"Ø (19 mm) female x 1"Ø (25 mm) male pipe connection,integral vacuum breaker,nickel bronze box and door.		-	-	-	-	3/4"
DF-1	Drinking Fountain		MDF #10145 SM, Two-level water fountain with bottle filler	McGuire #LFHSTLK, polished brass Provide drinking fountain supplies. McGuire #8872CB, P-Trap.	1-1/4"	-	1-1/2"	-	1/2"
DB-1	Drain Box		Oatey 37559, Aux drain box with funnel, Drain test plug and 3/4" copper inlet connection, mounted 42" AFF		2"	2"	1-1/2"	-	-
SP-1	Sump Pump		Weil M# 1619S, '1-1/2-Inch Submersible Stainless Steel Pump', 1/2 HP pump	Control panel, single-phase capacitor start motor, stainless steel lifting cable	2"	-	-	-	-

HW MIXING VALVE SCHEDULE

MARK	TMV-1
SERVICE	FIXTURES
VALVE OPERATION	THERMOSTATIC
OUTLET TEMPERATURE	110 DEG F
MIN. GPM	0.25
MAX. GPM	12.0
GPM @ 10 PSI DIFFERENTIAL	5.5
GPM @ 20 PSI DIFFERENTIAL	7.5
INLET SIZES	1/2"
OUTLET SIZE	1/2"
RE-CIRULATION SIZE	----
REFERENCE	
MANUFACTURER	LEONARD
MODEL NO.	ECO-MIX 270 LF-BRKT
NOTES	1, 2

NOTES:
1. COMPLY WITH ASSE 1070.
2. LEAD FREE

SHOCK ARRESTOR SCHEDULE

MARK	CONNECTION SIZE	F.U. RATING	P.D.I. CROSS REFERENCE	MANUFACTURER
WHA-A	1/2"	1-11	A	WATTS LF15M2-A
WHA-B	3/4"	12-32	B	WATTS LF15M2-B
WHA-C	1"	33-60	C	WATTS LF15M2-C
WHA-D	1"	61-113	D	WATTS LF15M2-D

RECIRCULATING PUMP SCHEDULE

MARK	SERVICE	GPM	TOTAL HEAD FT	MOTOR WATTS	ELECTRICAL			REMARKS
					VOLTS	PHASE	HERTZ	
RP-1 & RP-2	HOT WATER RECIRCULATION PUMP	1.75	15	30	115	1	60	BELL AND GOSSETT ECOCIRC XL 25-30

FURNISH WITH THE FOLLOWING OPTIONS AND ACCESSORIES:
1. LEAD FREE BRASS CONSTRUCTION
2. AUTOMATIC TIMER AND AQUASTAT
3. 3-YEAR WARRANTY
4. NYLON IMPELLER
5. CERAMIC CARBON BEARINGS
6. 6'-0" ELECTRIC CORD

ELECTRIC WATER HEATER SCHEDULE

MARK	STORAGE GALLONS	RECOVERY GALLONS PER HOUR	TEMP. RISE	ELECTRICAL				REMARKS
				VOLT	PHASE	HERTZ	KW	
WH-1 & WH-2	15	10	80°	240	1	60	2.5	A.O. SMITH DEL-15S (1) 4,500 WATT ELEMENT

TEXAS PARKS & WILDLIFE

FORD POWELL &CARSON
Architects & Planners, Inc.
Architecture
Planning
Preservation
Interior Design
1138 East Commerce Street
San Antonio, Texas 78205
210/226-1246
FPC# 92705

STATE OF TEXAS
MATTHEW E. BYNUM
122100
LICENSED
PROFESSIONAL ENGINEER
3-20
Alderson & Associates, Inc.
F-1008

ALDERSON & ASSOCIATES, INC.
MEP ENGINEERING | COMMISSIONING
7700 Torino St. Suite 101
San Antonio, TX 78223
Tel: 210.614.1210
PROJECT # 17012

© 2020 Alderson & Associates, Inc. F-1008

TYLER STATE PARK
HEADQUARTERS REPLACEMENT PHASE 1
PROJECT NUMBER: 112741

DATE: 07/03/2020
DESIGNED BY: MMK
DRAWN BY: MMK
REVIEWED BY: MEB

no.	revision	date

SHEET TITLE
PLUMBING SCHEDULES

SHEET NUMBER
P301

CONSTRUCTION DOCUMENTS

PATH: BIM 360://17-012 Tyler State Park Visitor Center Replacement/17012 Tyler - P19.rvt
DATE: 7/2/2020 4:08:00 PM

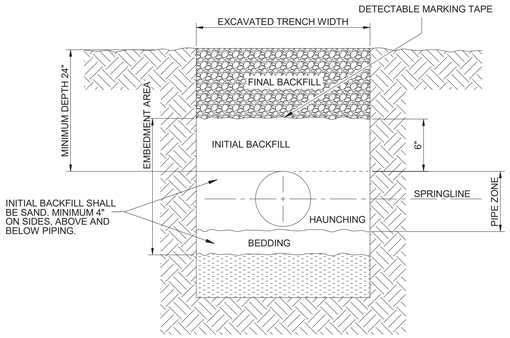

UNDERGROUND INSTALLATION OF PLASTIC PIPE

PLASTIC PIPE SHOULD ALWAYS BE BURIED IN STRICT ACCORDANCE WITH THE ASTM RELEVANT TO THE TYPE OF PLASTIC PIPING SYSTEM BEING INSTALLED. THOSE STANDARDS ARE:

ASTM D2321 FOR SEWERS AND OTHER GRAVITY-FLOW PIPING.

ASTM D2774 FOR PRESSURE PIPING.

NOTE: IN ADDITION TO THESE STANDARDS PIPE SHOULD ALWAYS BE INSTALLED IN ACCORDANCE WITH ALL LOCAL CODE REQUIREMENTS.

INSTALLATION OF UNDERGROUND PLASTIC DRAINAGE PIPE:

1. MINIMUM WIDTH OF THE TRENCH SHOULD BE THE PIPE OD PLUS 16" OR THE PIPE OD TIMES 1.25 PLUS 12" TO ALLOW ADEQUATE ROOM FOR JOINING THE PIPE, SNAKING FOR EXPANSION AND CONTRACTION WHERE APPROPRIATE AND BACKFILLING AND COMPACTION OF BACKFILL. THE SPACE BETWEEN THE PIPE AND THE TRENCH WALL MUST BE WIDER THAN THE COMPACTION EQUIPMENT USED.
2. PROVIDE 4" MINIMUM OF SAND BEDDING AND COVER MATERIAL IN THE TRENCH BOTTOM, SIDES, AND COVER. IF ROCK OR UNYIELDING MATERIAL IS ENCOUNTERED, PROVIDE 6" MINIMUM.
3. BLOCKING IS NOT PERMITTED TO SUPPORT PIPE IN THE TRENCH.
4. THE PIPE SHOULD BE SURROUNDED WITH SAND COMPACTED TO 85-95%.
5. PIPE SHALL ALWAYS BE INSTALLED MINIMUM 24" DEEP.
6. DO NOT ALLOW VEHICULAR TRAFFIC OR HEAVY CONSTRUCTION EQUIPMENT TO TRAVERSE THE PIPE TRENCH.

1 UNDERGROUND INSTALLATION OF PLASTIC PIPING SYSTEMS

NOT TO SCALE

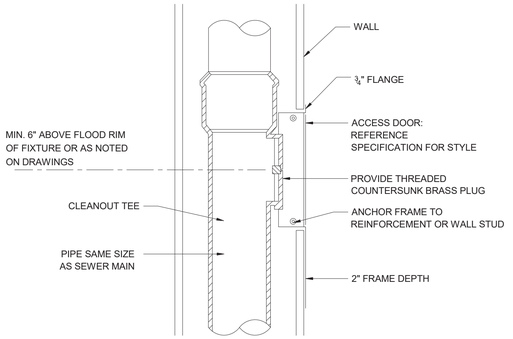

2 WALL CLEANOUT DETAIL

NOT TO SCALE

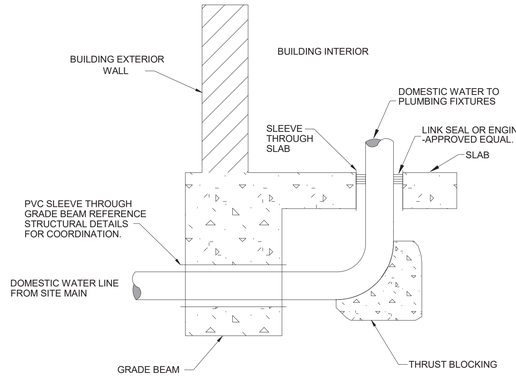

3 DOMESTIC WATER ENTRANCE RISER

NOT TO SCALE

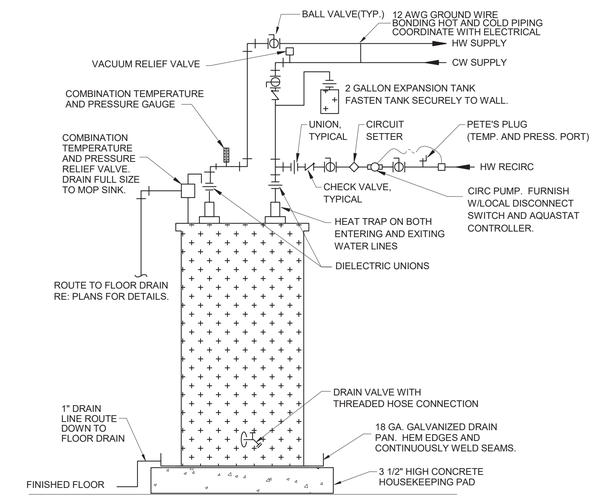

4 WATER HEATER DETAIL

NOT TO SCALE

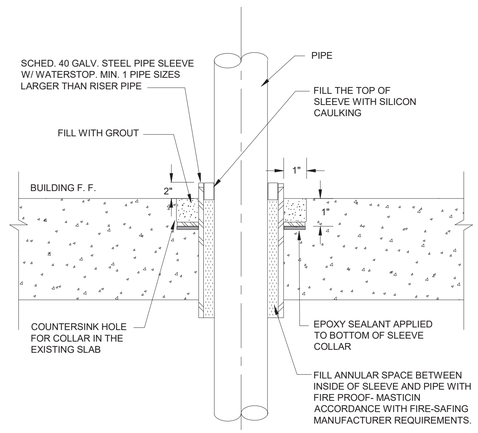

5 FLOOR SLEEVE DETAIL

NOT TO SCALE

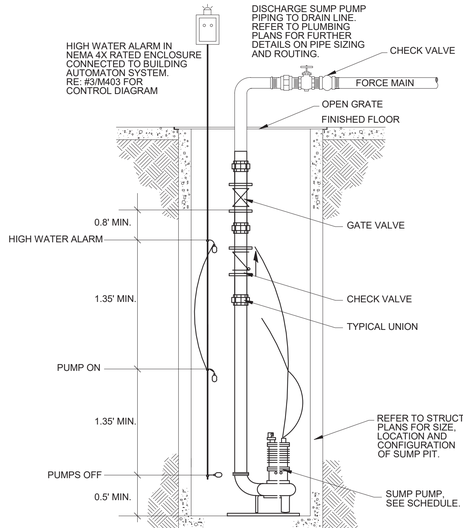

6 SUMP PUMP DETAIL

NOT TO SCALE

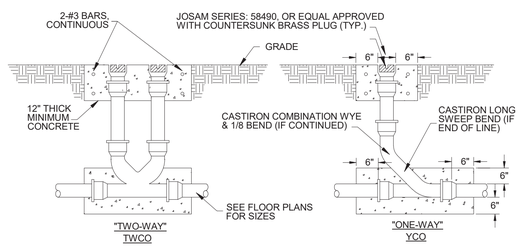

7 YARD CLEANOUT DETAIL

NOT TO SCALE

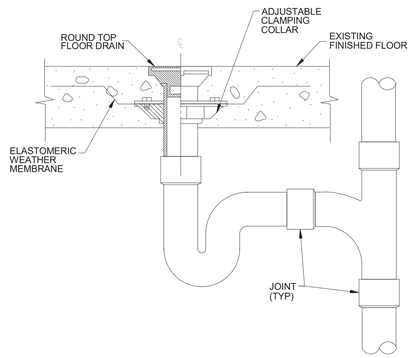

8 FLOOR DRAIN DETAIL

NOT TO SCALE

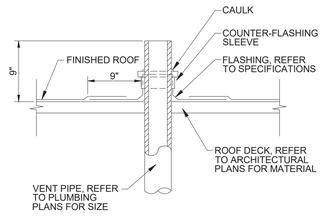

9 VENT PIPING FLASHING DETAIL

NOT TO SCALE

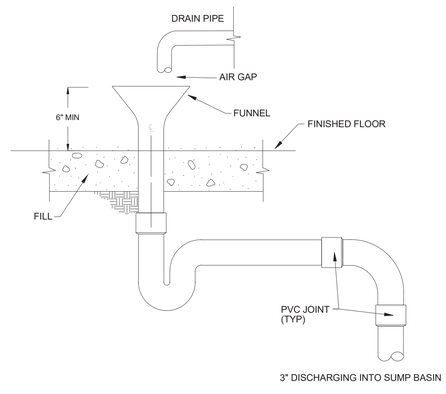

10 AREA DRAIN DETAIL

NOT TO SCALE

TEXAS PARKS & WILDLIFE

FORD POWELL &CARSON
Architects & Planners, Inc.
Architecture
Planning
Preservation
Interior Design
1138 East Commerce Street
San Antonio, Texas 78205
210/226-1246
FPC# 92705

STATE OF TEXAS
MATTHEW E. BYNUM
122100
LICENSED
PROFESSIONAL ENGINEER
7-3-20
Alderson & Associates, Inc.
F-1008

ALDERSON & ASSOCIATES, INC.
MEP ENGINEERING | COMMISSIONING
7700 Torino St, Suite 101
San Antonio, TX 78239
Telephone: 210.614.1110
© 2020 Alderson & Associates, Inc. F-1008
PROJECT # 17012

TYLER STATE PARK
HEADQUARTERS REPLACEMENT PHASE 1
PROJECT NUMBER: 112741

DATE: 07/03/2020
DESIGNED BY: MMK
DRAWN BY: MMK
REVIEWED BY: MEB

no.	revision	date

SHEET TITLE
PLUMBING DETAILS

SHEET NUMBER
P401

CONSTRUCTION DOCUMENTS

PATH: BIM 360://17-012 Tyler State Park Visitor Center Replacement/17012 Tyler - P19.rvt
DATE: 7/2/2020 4:08:00 PM

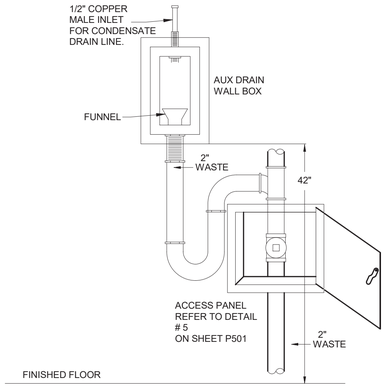

1 DRAIN BOX CONNECTION DETAIL

NOT TO SCALE

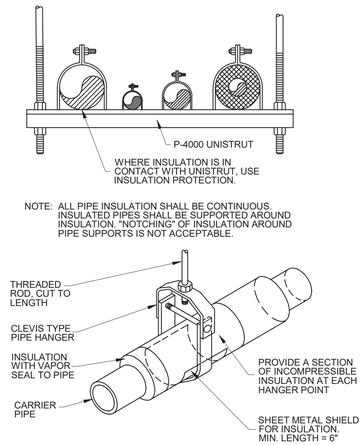

2 PIPE HANGER DETAIL

NOT TO SCALE

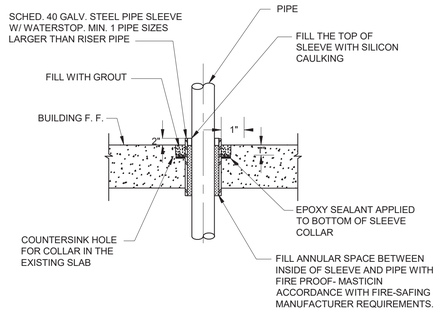

3 FLOOR SLEEVE DETAIL

NOT TO SCALE

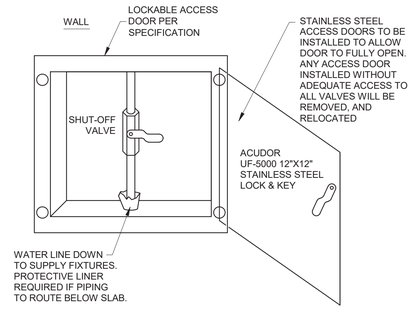

4 SHUTOFF VALVE ACCESS DOOR DETAIL

NOT TO SCALE

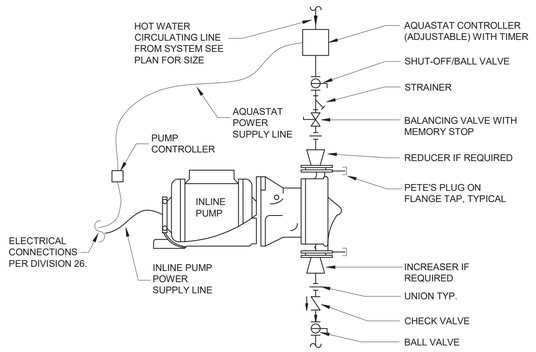

NOTES:
1. SET AQUASTAT TIMER TO OPERATE DURING OCCUPIED PERIODS. SET TIMER TO ENERGIZE ONE HOUR BEFORE ACTUAL BUILDING OCCUPANCY SCHEDULE.
2. THE AQUASTAT SENSOR CONTROLLER SHALL ALLOW THE RECIRCULATION PUMP TO ENERGIZE WHEN THE HOT WATER RETURN TEMPERATURE IS BELOW 110 DEGREES F (ADJUSTABLE).
3. ELECTRICAL WORK SHALL BE PREFORMED IN ACCORDANCE WITH NEC.

5 INLINE CIRCULATING PUMP DETAIL

NOT TO SCALE

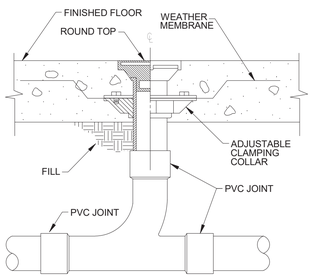

6 SANITARY WASTE FLOOR CLEAN-OUT DETAIL

NOT TO SCALE

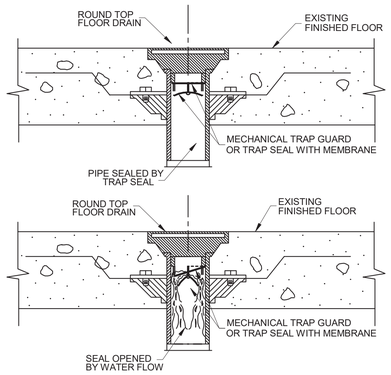

7 TRAP SEAL DETAIL

NOT TO SCALE

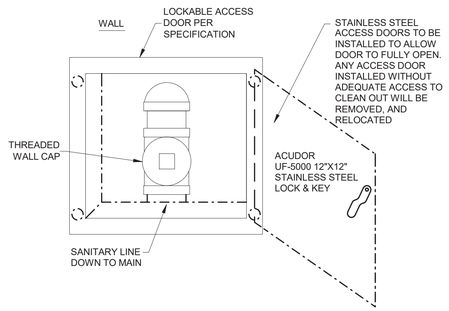

8 WALL CLEANOUT ACCESS DOOR DETAIL

NOT TO SCALE

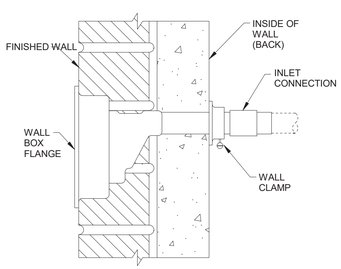

9 FREEZE-PROOF WALL HYDRANT DETAIL

NOT TO SCALE

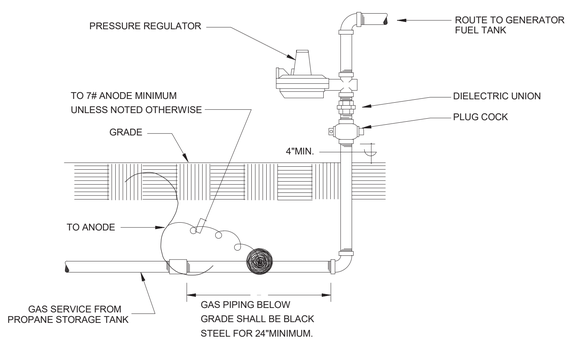

10 GAS PRESSURE REGULATOR DETAIL

NOT TO SCALE

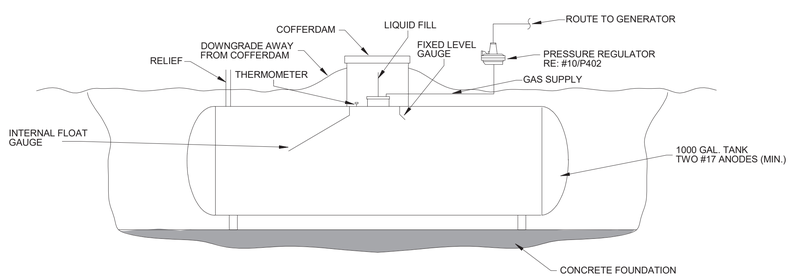

11 UNDERGROUND PROPANE TANK DETAIL

NOT TO SCALE

TEXAS PARKS & WILDLIFE

FORD POWELL &CARSON
Architects & Planners, Inc.
Architecture
Planning
Preservation
Interior Design
1138 East Commerce Street
San Antonio, Texas 78205
210/226-1246
FPC# 92705

STATE OF TEXAS
MATTHEW E. BYNUM
122100
LICENSED
PROFESSIONAL ENGINEER
7-3-20
Alderson & Associates, Inc.
F-1008

ALDERSON & ASSOCIATES, INC.
MEP ENGINEERING | COMMISSIONING
7700 Torino St. Suite 101
San Antonio, TX 78229
Telephone: 210.614.1110
© 2020 Alderson & Associates, Inc. F-1008
PROJECT # 17012

TYLER STATE PARK

HEADQUARTERS REPLACEMENT PHASE 1

PROJECT NUMBER: 112741

DATE: 07/03/2020
DESIGNED BY: MMK
DRAWN BY: MMK
REVIEWED BY: MEB

no.	revision	date

SHEET TITLE
PLUMBING DETAILS

SHEET NUMBER
P402

CONSTRUCTION DOCUMENTS

DATE: 7/2/2020 4:08:00 PM PATH: BIM 360://17-012 Tyler State Park Visitor Center Replacement/17012 Tyler - P19.rvt

TECHNOLOGY SYMBOLS & LEGEND

VOICE SYMBOLS

	SINGLE VOICE OUTLET, CABLE TYPE AS SPECIFIED, MOUNTED +18-INCHES A.F.F. UNLESS OTHERWISE NOTED.
X	VOICE OUTLET, CABLE TYPE AS SPECIFIED, MOUNTED +18-INCHES A.F.F. UNLESS OTHERWISE NOTED. X = NUMBER OF CABLE TERMINATIONS PER LOCATION.
	SINGLE VOICE OUTLET, CABLE TYPE AS SPECIFIED, MOUNTED +6-INCHES ABOVE COUNTER OR BACKSPLASH UNLESS OTHERWISE NOTED.
X	VOICE OUTLET, CABLE TYPE AS SPECIFIED, MOUNTED +6-INCHES ABOVE COUNTER OR BACKSPLASH UNLESS OTHERWISE NOTED, X = NUMBER OF CABLE TERMINATIONS PER LOCATION AS INDICATED.
	POWER/COMMUNICATIONS POLE WITH A SINGLE VOICE OUTLET, CABLE TYPE AS SPECIFIED, MOUNTED AT 18" A.F.F. UNLESS OTHERWISE NOTED.
X	POWER/COMMUNICATIONS POLE WITH X = NUMBER OF VOICE OUTLETS, CABLE TYPE AS SPECIFIED, MOUNTED AT 18" A.F.F. UNLESS OTHERWISE NOTED.
	SINGLE VOICE OUTLET, CABLE TYPE AS SPECIFIED, TERMINATED IN FLOOR BOX/POKE-THRU AS SPECIFIED.
X	VOICE OUTLET, CABLE TYPE AS SPECIFIED, TERMINATED IN FLOOR BOX/POKE -THRU AS SPECIFIED WITH X = NUMBER OF VOICE TERMINATIONS PER LOCATION.
W	SINGLE VOICE OUTLET FOR WALL-MOUNTED PHONE, CABLE TYPE AS SPECIFIED, MOUNTED +52-INCHES A.F.F. UNLESS OTHERWISE NOTED.

DATA SYMBOLS

	SINGLE DATA OUTLET, CABLE TYPE AS SPECIFIED, MOUNTED +18-INCHES A.F.F. UNLESS OTHERWISE NOTED.
X	DATA OUTLET, CABLE TYPE AS SPECIFIED, MOUNTED +18-INCHES A.F.F. UNLESS OTHERWISE NOTED. X = NUMBER OF CABLE TERMINATIONS PER LOCATION.
	SINGLE DATA OUTLET, CABLE TYPE AS SPECIFIED, MOUNTED +6-INCHES ABOVE COUNTER OR BACKSPLASH UNLESS OTHERWISE NOTED.
X	DATA OUTLET, CABLE TYPE AS SPECIFIED, MOUNTED +6-INCHES ABOVE COUNTER OR BACKSPLASH UNLESS OTHERWISE NOTED, X = NUMBER OF CABLE TERMINATIONS PER LOCATION AS INDICATED.
	POWER/COMMUNICATIONS POLE WITH A SINGLE DATA OUTLET, CABLE TYPE AS SPECIFIED, MOUNTED AT 18" A.F.F. UNLESS OTHERWISE NOTED.
X	POWER/COMMUNICATIONS POLE WITH X = NUMBER OF DATA OUTLETS, CABLE TYPE AS SPECIFIED, MOUNTED AT 18" A.F.F. UNLESS OTHERWISE NOTED.
	SINGLE DATA OUTLET, CABLE TYPE AS SPECIFIED, TERMINATED IN FLOOR BOX/POKE-THRU AS SPECIFIED.
X	DATA OUTLET, CABLE TYPE AS SPECIFIED, TERMINATED IN FLOOR BOX/POKE -THRU AS SPECIFIED WITH X = NUMBER OF CABLE TERMINATIONS PER LOCATION.
W	SINGLE DATA OUTLET FOR WALL-MOUNTED IP PHONE, CABLE TYPE AS SPECIFIED, MOUNTED +52-INCHES A.F.F. UNLESS OTHERWISE NOTED.
	SINGLE ABOVE CEILING DATA OUTLET, CABLE TYPE AS SPECIFIED.
X	ABOVE CEILING DATA OUTLET, CABLE TYPE AS SPECIFIED WITH X = NUMBER OF CABLE TERMINATIONS PER LOCATION.

ROUGH-IN & MISC. SYMBOLS

	ROUGH-IN LOCATION, INFRASTRUCTURE AS SPECIFIED, MOUNTED +18-INCHES A.F.F. UNLESS OTHERWISE NOTED.
	ROUGH-IN LOCATION, INFRASTRUCTURE AS SPECIFIED, MOUNTED +6-INCHES ABOVE COUNTER OR BACKSPLASH UNLESS OTHERWISE NOTED.
	POWER POLE WITH ROUGH-IN LOCATION, INFRASTRUCTURE AS SPECIFIED, MOUNTED AT 18" A.F.F. UNLESS OTHERWISE NOTED.
	ROUGH-IN LOCATION, TERMINATED IN FLOOR BOX/POKE-THRU AS SPECIFIED.
WAP	WIRELESS ACCESS POINT. EQUIPMENT AS SPECIFIED.

GENERAL SYMBOLS

# / SHEET — DRAWING TITLE — SCALE: SCALE	DRAWING TITLE CALLOUT, # = DETAIL NUMBER.
# / SHEET	DETAIL CALLOUT, # = DETAIL NUMBER.
# / SHEET	SECTION CALLOUT, # = DETAIL NUMBER.
SHEET / #	ELEVATION CALLOUT, # = DETAIL NUMBER.
#	KEYED NOTE, # = KEYED NOTE NUMBER.
#	REVISION TRIANGLE, # = REVISION NUMBER (PER SHEET).
TR (IDF XXX)	INDICATES TELECOMMUNICATIONS REGION

VOICE/DATA SYMBOLS

	SINGLE VOICE & SINGLE DATA OUTLET, CABLE TYPE AS SPECIFIED, MOUNTED +18-INCHES A.F.F. UNLESS OTHERWISE NOTED.
X Y	VOICE & DATA OUTLET, CABLE TYPE AS SPECIFIED, MOUNTED +18-INCHES A.F.F. UNLESS OTHERWISE NOTED. X = NUMBER OF VOICE TERMINATIONS , Y = NUMBER OF DATA TERMINATIONS PER LOCATION.
	SINGLE VOICE & SINGLE DATA OUTLET, CABLE TYPE AS SPECIFIED, MOUNTED +6-INCHES ABOVE COUNTER OR BACKSPLASH UNLESS OTHERWISE NOTED.
X Y	VOICE & DATA OUTLET, CABLE TYPE AS SPECIFIED, MOUNTED +6-INCHES ABOVE COUNTER OR BACKSPLASH UNLESS OTHERWISE NOTED, X = NUMBER OF VOICE OUTLETS AND Y = NUMBER OF DATA OUTLETS PER LOCATION AS INDICATED.
	POWER/COMMUNICATIONS POLE WITH A SINGLE VOICE OUTLET AND SINGLE DATA OUTLET, CABLE TYPE AS SPECIFIED, MOUNTED AT 18" A.F.F. UNLESS OTHERWISE NOTED.
X Y	POWER/COMMUNICATIONS POLE WITH X = NUMBER OF VOICE TERMINATIONS, Y = NUMBER OF DATA TERMINATIONS, CABLE TYPE AS SPECIFIED, MOUNTED AT 18" A.F.F. UNLESS OTHERWISE NOTED.
	SINGLE VOICE OUTLET, CABLE TYPE AS SPECIFIED, TERMINATED IN FLOOR BOX/POKE-THRU AS SPECIFIED.
X Y	VOICE OUTLET, CABLE TYPE AS SPECIFIED, TERMINATED IN FLOOR BOX/POKE -THRU AS SPECIFIED WITH X = NUMBER OF VOICE TERMINATIONS, Y = NUMBER OF DATA TERMINATIONS PER LOCATION.

FIBER OPTIC SYMBOLS

	SINGLE FIBER OPTIC OUTLET, CABLE TYPE AS SPECIFIED, MOUNTED +18-INCHES A.F.F. UNLESS OTHERWISE NOTED.
X	FIBER OPTIC OUTLET, CABLE TYPE AS SPECIFIED, MOUNTED +18-INCHES A.F.F. UNLESS OTHERWISE NOTED. X = NUMBER OF CABLE TERMINATIONS PER LOCATION.
	SINGLE FIBER OPTIC OUTLET, CABLE TYPE AS SPECIFIED, MOUNTED +6-INCHES ABOVE COUNTER OR BACKSPLASH UNLESS OTHERWISE NOTED.
X	FIBER OPTIC OUTLET, CABLE TYPE AS SPECIFIED, MOUNTED +6-INCHES ABOVE COUNTER OR BACKSPLASH UNLESS OTHERWISE NOTED, X = NUMBER OF CABLE TERMINATIONS PER LOCATION AS INDICATED.
	POWER/COMMUNICATIONS POLE WITH A SINGLE FIBER OPTIC OUTLET, CABLE TYPE AS SPECIFIED, MOUNTED AT 18" A.F.F. UNLESS OTHERWISE NOTED.
X	POWER/COMMUNICATIONS POLE WITH X = NUMBER OF FIBER OPTIC OUTLETS, CABLE TYPE AS SPECIFIED, MOUNTED AT 18" A.F.F. UNLESS OTHERWISE NOTED.
	SINGLE FIBER OPTIC OUTLET, CABLE TYPE AS SPECIFIED, TERMINATED IN FLOOR BOX/POKE-THRU AS SPECIFIED.
X	FIBER OPTIC OUTLET, CABLE TYPE AS SPECIFIED, TERMINATED IN FLOOR BOX/POKE -THRU AS SPECIFIED WITH X = NUMBER OF CABLE TERMINATIONS PER LOCATION.

CABLE PLANT & RISER DIAGRAM

	MAINTENANCE HOLE, SIZE & TYPE AS SPECIFIED.
	PULLBOX, SIZE AND TYPE AS SPECIFIED.
UGC	DIRECT BURIED COMMUNICATIONS, CABLE TYPE AS SPECIFIED.
AER	AERIAL COMMUNICATIONS, CABLE TYPE AS SPECIFIED.
	CONDUIT, SIZE AND TYPE AS SPECIFIED.

ABBREVIATIONS

A.F.F.	ABOVE FINISHED FLOOR
A.F.G.	ABOVE FINISHED GRADE
AER	AERIAL
DEMARC	DEMARCATION POINT
EMT	ELECTRIC METALLIC TUBE
F.O.C.	FIBER OPTIC CABLE
GIP	GALVANIZED IRON PIPE
HE	PA/INTERCOM HEAD-END
IMC	INTERMEDIATE METAL CONDUIT
ISP	INSIDE CABLE PLANT
IDF	INTERMEDIATE DISTRIBUTION FRAME
MDF	MAIN DISTRIBUTION FRAME
MH	MAINTENANCE HOLE
MM	MULTIMODE
OSP	OUTSIDE CABLE PLANT
PB	PULLBOX
PR	PAIR
PVC	POLYVINYL CHLORIDE
RSC	RIGID STEEL CONDUIT
SM	SINGLE MODE
SP	SERVICE PROVIDER
STP	SHIELDED TWISTED PAIR
TB	TERMINAL BLOCK
TR	TELECOMMUNICATION REGION
UGC	UNDERGROUND COMMUNICATION
UON	UNLESS OTHERWISE NOTED
UTP	UNSHIELDED TWISTED PAIR

NOTES

1. CONTRACTOR SHALL REVIEW DRAWINGS AND SPECIFICATIONS THAT MAKE UP THE CONTRACT DOCUMENTS AND COMPLETE ALL WORK INCLUDED THEREIN.
2. SCALE OF TECHNOLOGY DRAWINGS IS PROVIDED FOR REFERENCE ONLY. CONTRACTOR SHALL BE RESPONSIBLE FOR PROPER CABLE LENGTHS, SIZE OF PATHWAYS, DIMENSIONS, ETC.
3. TECHNOLOGY DRAWINGS SHALL BE USED TO COMPLEMENT THE WRITTEN SPECIFICATIONS.
4. ANY DISCREPANCY OR CONFLICT WITHIN OR BETWEEN THE DRAWINGS AND SPECIFICATIONS SHALL BE BROUGHT TO THE ATTENTION OF THE ARCHITECT/ENGINEER. DISCREPANCIES OR CONFLICTS NOT BROUGHT TO THE ATTENTION OF THE ARCHITECT/ENGINEER AND SUBSEQUENTLY CLARIFIED DURING THE BIDDING OF THE PROJECT WILL BE DEEMED TO HAVE BEEN BID OR PROPOSED IN THE MORE COSTLY OR DIFFICULT MANNER, AND THE BETTER QUALITY OR GREATER QUANTITY OF WORK SHALL BE PROVIDED BY THE CONTRACTOR IN ACCORDANCE WITH THE ARCHITECT'S/ENGINEER'S INTERPRETATION.

INDEX OF DRAWINGS

T000	TECHNOLOGY SYMBOLS & LEGEND
T101	TECHNOLOGY SITE PLAN
T201	TECHNOLOGY OVERALL FLOOR PLANS
T202	TECHNOLOGY FLOOR PLANS
T203	TECHNOLOGY FLOOR PLANS
T301	TECHNOLOGY ENLARGED PLANS & ELEVATIONS
T401	TECHNOLOGY TYPICAL DETAILS
T402	TECHNOLOGY TYPICAL DETAILS
T501	TECHNOLOGY TYPICAL LABELING SCHEME

TEXAS PARKS & WILDLIFE

FORD POWELL & CARSON Architects & Planners, Inc.
Architecture
Planning
Preservation
Interior Design
1138 East Commerce Street
San Antonio, Texas 78205
210/226-1246
FPC# 92705

REGISTERED COMMUNICATIONS DISTRIBUTION DESIGNER
BICSI
BRIAN K COMBS
BICSI ID# 118077
EXPIRES 12-31-21
RCDD
07-03-2020

COMBS Consulting Group
technology & security
SAN ANTONIO
Stone Oak Plaza, Bldg. 4, Ste. 400
San Antonio, Texas 78230
Phone : 210-998-7887
AUSTIN
4615 Bee Cave Rd., Ste. 110
Austin, Texas 78735

TYLER STATE PARK
HEADQUARTERS REPLACEMENT PHASE 1
PROJECT NUMBER: 112741

DATE: 07/03/2020
DESIGNED BY: DR
DRAWN BY: PM
REVIEWED BY: DR

no.	revision	date

SHEET TITLE
TECHNOLOGY SYMBOLS & LEGEND

SHEET NUMBER
T000

CONSTRUCTION DOCUMENTS

PATH: G:\Projects – San Antonio – Active\Tyler Texas State Park\3 – Drawings\1 – Current Drawings\92705-Tyler_SP_Bldg_TECH_v2019.rvt
DATE: 7/2/2020 8:02:08 AM

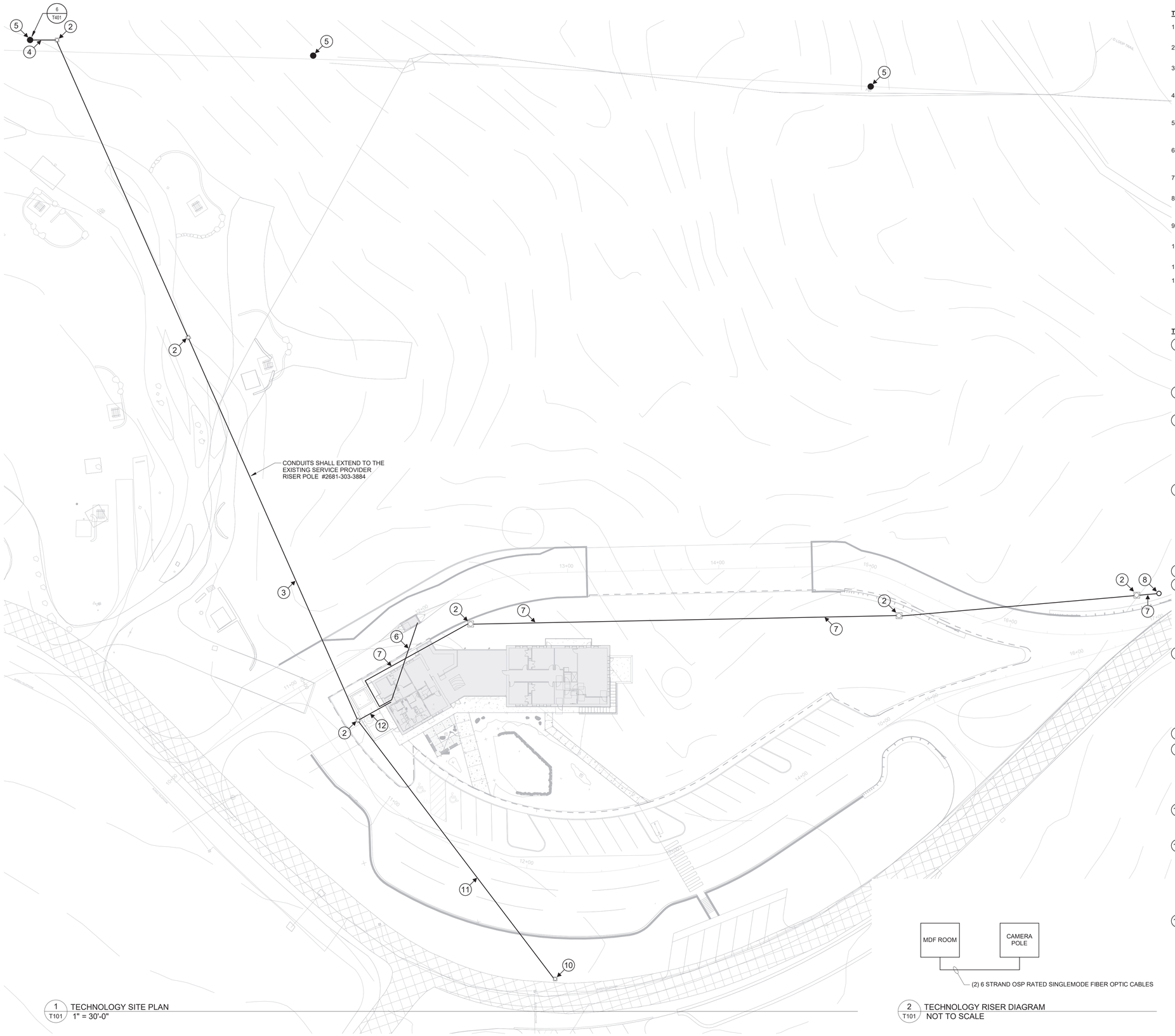

1 TECHNOLOGY SITE PLAN
T101 1" = 30'-0"

2 TECHNOLOGY RISER DIAGRAM
T101 NOT TO SCALE

TECHNOLOGY SITE PLAN GENERAL NOTES

1. ALL CONDUIT PATHWAYS, ROUGH-INS, CONDUIT SLEEVES, ETC. INDICATED ON THE TECHNOLOGY DRAWINGS ARE TO BE PROVIDED AND INSTALLED BY DIVISION 26.
2. ALL POWER INDICATED ON THE TECHNOLOGY DRAWINGS IS TO BE PROVIDED AND INSTALLED BY DIVISION 26.
3. CONTRACTOR SHALL RESTORE ALL PENETRATIONS PROVIDED THROUGH FIRE RATED WALLS/STRUCTURES FOR TECHNOLOGY CABLING BACK TO THE ORIGINAL RATING.
4. CONTRACTOR SHALL RESTORE ALL PENETRATIONS PROVIDED THROUGH NON-RATED WALLS/STRUCTURES FOR TECHNOLOGY CABLING FOR SOUND TO REDUCE NOISE TRAVELING THROUGH PENETRATIONS.
5. CONTRACTOR SHALL RESTORE ALL PENETRATIONS PROVIDED THROUGH WALLS/STRUCTURES FOR TECHNOLOGY CABLING TO PREVENT WATER INFILTRATION INTO THE SPACE.
6. CONDUITS SHALL MAINTAIN A MINIMUM OF 12-INCHES OF WELL TAMPED EARTH OR 3-INCHES OF CONCRETE SEPARATION BETWEEN ANY FOREIGN CONDUITS AND/OR PIPES THROUGHOUT THE ENTIRE CONDUIT PATHWAY.
7. CONDUIT SEGMENTS SHALL BE NO MORE THAN 600-FEET IN LENGTH WITH NO MORE THAN THE EQUIVALENT OF (2) 90 DEGREE BENDS BETWEEN PULLING POINTS.
8. CONDUITS SHALL MAINTAIN A BEND RADIUS OF 6 TIMES THE DIAMETER OF THE CONDUIT FOR CONDUITS 2-INCHES OR SMALLER AND 10 TIMES THE DIAMETER OF THE CONDUIT FOR CONDUITS GREATER THAN 2-INCHES.
9. CONTRACTOR SHALL PROVIDE DETECTABLE WARNING TAPE 12-INCHES BELOW GRADE ON TOP OF ALL CONDUITS THROUGHOUT THE ENTIRE CONDUIT TRENCH.
10. CONTRACTOR SHALL COORDINATE ALL CONDUIT PATHWAYS WITH THE ARCHITECT AND LANDSCAPE PLAN PRIOR TO BEGINNING ANY TRENCHING.
11. ALL CONDUITS SHALL HAVE A PULL STRING INSTALLED FOR PULLING OF CABLE.
12. ALL SPARE CONDUITS OR CONDUITS FILLED WITH LESS THAN THE MAXIMUM ALLOWED FILL RATIO SHALL HAVE A PULL STRING INSTALLED AND LEFT FOR FUTURE PULLING OF CABLE. CLEARLY LABEL AS "PULL STRING" INDICATING OPPOSITE END LOCATION.

TECHNOLOGY SITE PLAN GENERAL NOTES

1. (3) (4)-INCH SCHEDULE 80 PVC CONRETE ENCASED CONDUITS BURIED 36-INCHES BELOW FINAL FINISHED GRADE BETWEEN HANDHOLES. CONDUITS SHALL STUB INTO THE SIDE OF THE HANDHOLES. CONTRACTOR SHALL PROVIDE PULL STRING INSIDE EACH CONDUIT. CONTRACTOR SHALL PROVIDE NYLON BUSHINGS AND PROTECTIVE CAPS ON EACH END OF THE CONDUIT. CONTRACTOR SHALL REFER TO THE ELECTRICAL DRAWINGS FOR EXACT ROUGH IN DETAILS. (BY DIV 26)
2. (24)-INCH X (24)-INCH X (24)-INCH DEEP HAND HOLE WITH LOCKABLE COVER RATED FOR ENVIRONMENT STAMPED WITH TELECOMMUNICATIONS. COVER OF HANDHOLE SHALL BE FLUSH WITH FINAL FINISHED GRADE. (BY DIV 26)
3. (3) (4)-INCH SCHEDULE 80 PVC CONRETE ENCASED CONDUITS BURIED 36-INCHES BELOW FINAL FINISHED GRADE FROM NEW LOCKABLE COMMUNICATIONS HAND HOLE TO THE NEW LOCKABLE COMMUNICATIONS HAND HOLE. CONTRACTOR SHALL PROVIDE PULL STRING INSIDE EACH CONDUIT. CONTRACTOR SHALL PROVIDE NYLON BUSHINGS AND PROTECTIVE CAPS ON EACH END OF THE CONDUIT. CONTRACTOR SHALL REFER TO THE ELECTRICAL DRAWINGS FOR EXACT ROUGH IN DETAILS. CONTRACTOR SHALL SHARE THE SAME TRENCH WITH ELECTRICAL. LOW VOLTAGE CONDUITS MUST BE ON TOP OF OTHER UTILITIES AND MAINTAIN A 12-INCH COMPACTED SOIL SEPARATION FROM ALL OTHER UTILTIES. (BY DIV 26)
4. (3) 4-INCH SCHEDULE 80 PVC CONRETE ENCASED CONDUITS BURIED 36-INCHES BELOW FINAL FINISHED GRADE FROM HANDHOLE TO THE EXISTING UTILITY POLE. THE UTILITY POLE CONDUIT RISERS SHALL BE TERMINATED 10 FEET ABOVE FINISHED GRADE AT THE POLE. CONTRACTOR SHALL PROVIDE PULL STRING INSIDE EACH CONDUIT. CONTRACTOR SHALL PROVIDE NYLON BUSHINGS AND PROTECTIVE CAPS ON EACH END OF THE CONDUIT. THESE CONDUITS SHALL BE RESERVED FOR SERVICE PROVIDER USE ONLY. CONTRACTOR SHALL REFER TO THE ELECTRICAL DRAWINGS FOR EXACT ROUGH IN DETAILS. CONTRACTOR SHALL SHARE THE SAME TRENCH WITH ELECTRICAL. LOW VOLTAGE CONDUITS MUST BE ON TOP OF OTHER UTILITIES AND MAINTAIN A 12-INCH COMPACTED SOIL SEPARATION FROM ALL OTHER UTILTIES. (BY DIV. 26)
5. APPROXIMATE LOCATION OF EXISTING UTILITY POLE.
6. (2) (2)-INCH SCHEDULE 80 PVC CONRETE ENCASED CONDUITS BURIED 36-INCHES BELOW FINAL FINISHED GRADE FROM THE MDF TO THE NEW TICKET BOOTH. CONDUITS SHALL BE TERMINATED 4-INCHES A.F.F AND NO FARTHER THAN 2-INCHES FROM THE WALL IN THE MDF. CONDUITS SHALL BE TERMINATED 4-INCHES A.F.F AND NO FARTHER THAN 2-INCHES FROM THE WALL IN THE TICKET BOOTH. CONTRACTOR SHALL PROVIDE PULL STRING INSIDE EACH CONDUIT. CONTRACTOR SHALL PROVIDE NYLON BUSHINGS AND PROTECTIVE CAPS ON EACH END OF THE CONDUIT. CONTRACTOR SHALL REFER TO THE ELECTRICAL DRAWINGS FOR EXACT ROUGH IN DETAILS. (BY DIV 26)
7. (2) 1 1/4-INCH SCHEDULE 80 PVC CONRETE ENCASED CONDUITS BURIED 36-INCHES BELOW FINAL FINISHED GRADE FROM HANDHOLE TO THE NEW UTILITY/CAMERA POLE. CONTRACTOR SHALL REFER TO TS-SHEETS FOR EXACT ROUGH IN DETAILS AT THE POLE. CONTRACTOR SHALL PROVIDE PULL STRING INSIDE EACH CONDUIT. CONTRACTOR SHALL PROVIDE NYLON BUSHINGS AND PROTECTIVE CAPS ON EACH END OF THE CONDUIT. THESE CONDUITS SHALL BE RESERVED FOR LOW VOLTAGE USE ONLY. CONTRACTOR SHALL REFER TO THE ELECTRICAL DRAWINGS FOR EXACT ROUGH IN DETAILS. CONTRACTOR SHALL SHARE THE SAME TRENCH WITH ELECTRICAL. LOW VOLTAGE CONDUITS MUST BE ON TOP OF OTHER UTILITIES AND MAINTAIN A 12-INCH COMPACTED SOIL SEPARATION FROM ALL OTHER UTILTIES. (BY DIV. 26)
8. APPROXIMATE LOCATION OF NEW UTILTIY/CAMERA POLE. (BY DIV 26)
9. (3) (4)-INCH SCHEDULE 80 PVC CONRETE ENCASED CONDUITS BURIED 36-INCHES BELOW FINAL FINISHED GRADE FROM THE MDF TO THE NEW HANDHOLE. CONDUITS SHALL BE TERMINATED 4-INCHES A.F.F AND NO FARTHER THAN 2-INCHES FROM THE WALL IN THE MDF. CONDUITS SHALL STUB INTO THE SIDE OF THE HANDHOLE. CONTRACTOR SHALL PROVIDE PULL STRING INSIDE EACH CONDUIT. CONTRACTOR SHALL PROVIDE NYLON BUSHINGS AND PROTECTIVE CAPS ON EACH END OF THE CONDUIT. CONTRACTOR SHALL REFER TO THE ELECTRICAL DRAWINGS FOR EXACT ROUGH IN DETAILS. (BY DIV 26)
10. APPROXIMATE LOCATION OF EXISTING SERVICE PROVIDER MANHOLE/PEDESTAL. CONTRACTOR SHALL PERFORM AND SITE TOUR AND COORDINATE WITH THE SERVICE PROVIDER PRIOR TO TERMINATING CONDUITS INTO THE EXISTING HANDHOLE/PEDESTAL. (BY DIV 26)
11. (3) (4)-INCH SCHEDULE 80 PVC CONRETE ENCASED CONDUITS BURIED 36-INCHES BELOW FINAL FINISHED GRADE FROM NEW LOCKABLE COMMUNICATIONS HAND HOLE TO THE EXISTING SERVICE PROVIDE COMMUNICATIONS MAN HOLE. CONTRACTOR SHALL PROVIDE PULL STRING INSIDE EACH CONDUIT. CONTRACTOR SHALL PROVIDE NYLON BUSHINGS AND PROTECTIVE CAPS ON EACH END OF THE CONDUIT. CONTRACTOR SHALL REFER TO THE ELECTRICAL DRAWINGS FOR EXACT ROUGH IN DETAILS. CONTRACTOR SHALL SHARE THE SAME TRENCH WITH ELECTRICAL. LOW VOLTAGE CONDUITS MUST BE ON TOP OF OTHER UTILITIES AND MAINTAIN A 12-INCH COMPACTED SOIL SEPARATION FROM ALL OTHER UTILTIES. (BY DIV 26)
12. (6) (4)-INCH SCHEDULE 80 PVC CONRETE ENCASED CONDUITS BURIED 36-INCHES BELOW FINAL FINISHED GRADE FROM THE MDF TO THE NEW HANDHOLE. CONDUITS SHALL BE TERMINATED 4-INCHES A.F.F AND NO FARTHER THAN 2-INCHES FROM THE WALL IN THE MDF. CONDUITS SHALL STUB INTO THE SIDE OF THE HANDHOLE. CONTRACTOR SHALL PROVIDE PULL STRING INSIDE EACH CONDUIT. CONTRACTOR SHALL PROVIDE NYLON BUSHINGS AND PROTECTIVE CAPS ON EACH END OF THE CONDUIT. CONTRACTOR SHALL REFER TO THE ELECTRICAL DRAWINGS FOR EXACT ROUGH IN DETAILS. (BY DIV 26)

TEXAS PARKS & WILDLIFE

FORD POWELL & CARSON
Architects & Planners, Inc.
Architecture
Planning
Preservation
Interior Design
1138 East Commerce Street
San Antonio, Texas 78205
210/226-1246
FPC# 92705

REGISTERED COMMUNICATIONS DISTRIBUTION DESIGNER
BICSI
BRIAN K COMBS
BICSI ID# 118077
EXPIRES 12-31-21
* RCDD *
07-03-2020

COMBS Consulting Group
technology & security
SAN ANTONIO
8200 IH 10 West, Bldg. 4, Ste. 800
San Antonio, Texas 78230
Phone : 210-998-7887
AUSTIN
4301 Bull Creek Dr., 100
Austin, Texas 78735

TYLER STATE PARK
HEADQUARTERS REPLACEMENT PHASE 1
PROJECT NUMBER: 112741

DATE: 07/03/2020
DESIGNED BY: DR
DRAWN BY: PM
REVIEWED BY: DR

no.	revision	date

SHEET TITLE
TECHNOLOGY SITE PLAN

SHEET NUMBER
T101

CONSTRUCTION DOCUMENTS

DATE: 7/2/2020 8:02:10 AM PATH: G:\Projects - San Antonio - Active\Tyler Texas State Park\3 - Drawings\1 - Current Drawings\92705-Tyler SP Rdg_TECH_v2019.rvt

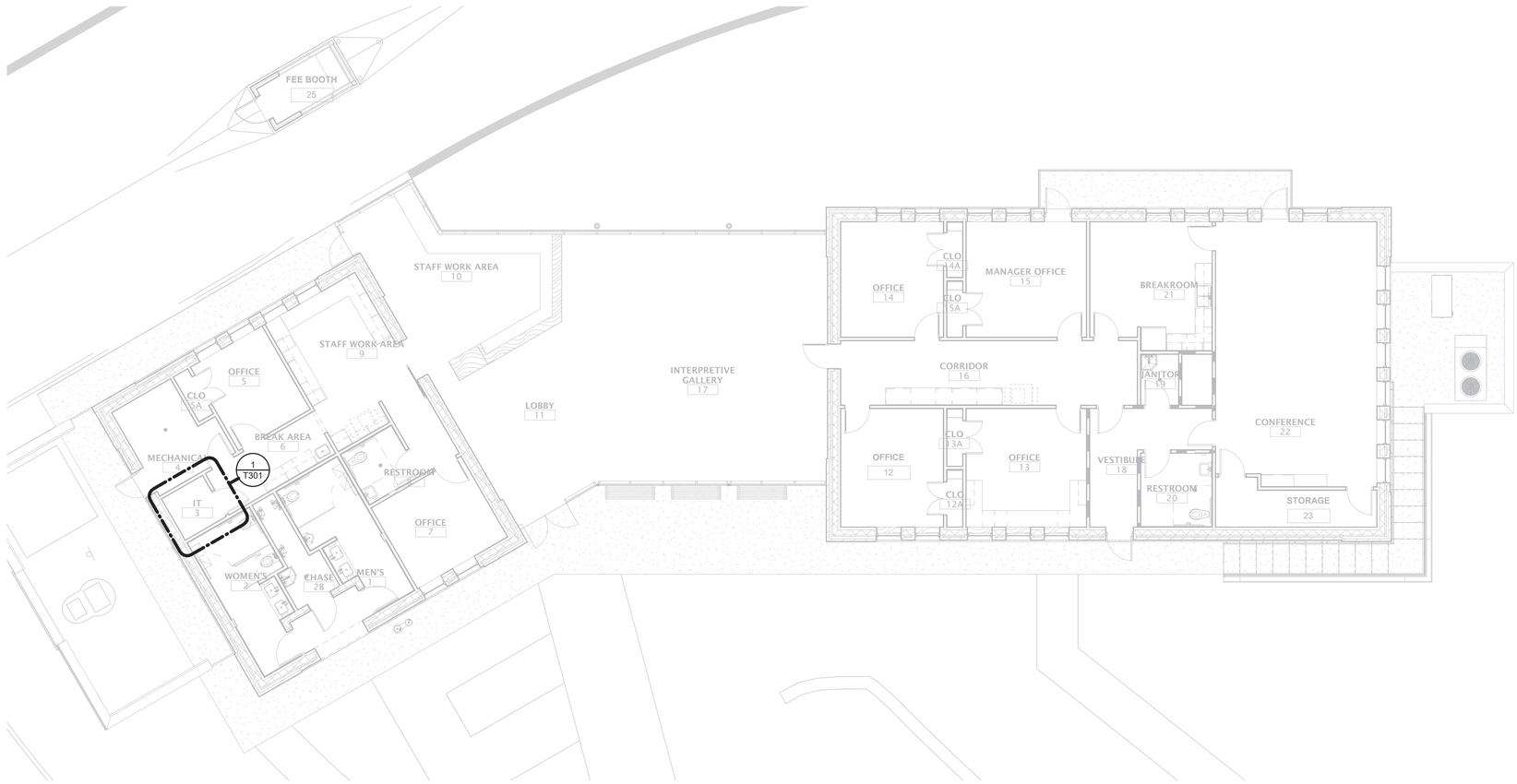

1 T201 TECHNOLOGY FIRST FLOOR OVERALL
1/8" = 1'-0"

TEXAS PARKS & WILDLIFE

FORD POWELL &CARSON
Architects & Planners, Inc.
Architecture
Planning
Preservation
Interior Design
1138 East Commerce Street
San Antonio, Texas 78205
210/226-1246
FPC# 92705

REGISTERED COMMUNICATIONS DISTRIBUTION DESIGNER
Bicsi
BRIAN K COMBS
BICSI ID# 118077
EXPIRES 12-31-21
RCDD
07-03-2020

COMBS Consulting Group
technology & security
SAN ANTONIO
8200 H-10 West, Ste. 103
San Antonio, Texas 78230
Phone : 210-698-7887
AUSTIN
4425 S. Mopac, Bldg. 4, Ste. 800
Austin, Texas 78735

TYLER STATE PARK
HEADQUARTERS REPLACEMENT PHASE 1
PROJECT NUMBER: 112741

DATE: 07/03/2020
DESIGNED BY: DR
DRAWN BY: PM
REVIEWED BY: DR

no.	revision	date

SHEET TITLE
TECHNOLOGY OVERALL FLOOR PLANS

SHEET NUMBER
T201

CONSTRUCTION DOCUMENTS

PATH: G:\Projects - San Antonio - Active\Tyler Texas State Park\3 - Drawings\1 - Current Drawings\92705-Tyler SP Bldg_TECH_v2019.rvt
DATE: 7/2/2020 8:02:11 AM

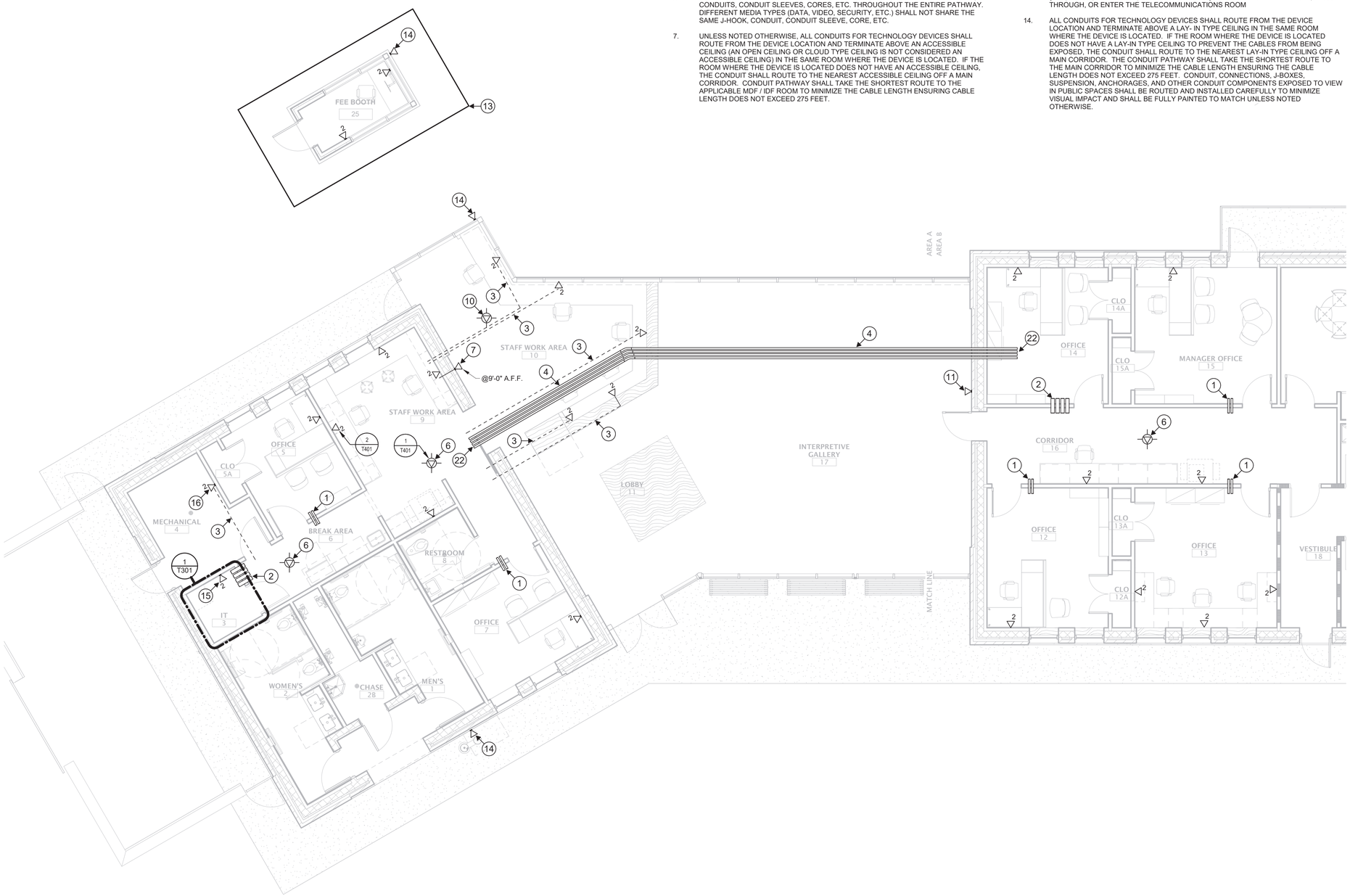

1 T202 TECHNOLOGY ENLARGED FLOOR PLAN AREA A
3/16" = 1'-0"

TECHNOLOGY FLOOR PLAN GENERAL NOTES

1. THE TECHNOLOGY REGION / WIRING BOUNDARIES ARE IDENTIFIED ON THE OVERALL SHEETS ONLY AND NOT ON THE ENLARGED SHEETS. CONTRACTOR SHALL REFER TO THE OVERALL SHEETS FOR ALL TECHNOLOGY REGIONS / WIRING BOUNDARIES.
2. ALL CONDUIT PATHWAYS, ROUGH-INS, BACKBOXES, FLOOR BOXES, CONDUIT SLEEVES, ETC. INDICATED ON THE TECHNOLOGY DRAWINGS ARE TO BE PROVIDED AND INSTALLED BY DIVISION 26.
3. ALL POWER INDICATED ON THE TECHNOLOGY DRAWINGS IS TO BE PROVIDED AND INSTALLED BY DIVISION 26.
4. CONTRACTOR SHALL RESTORE ALL PENETRATIONS PROVIDED THROUGH FIRE RATED WALLS/STRUCTURES FOR TECHNOLOGY CABLING BACK TO THE ORIGINAL RATING.
5. CONTRACTOR SHALL RESTORE ALL PENETRATIONS PROVIDED THROUGH NON-RATED WALLS/STRUCTURES FOR TECHNOLOGY CABLING FOR SOUND TO REDUCE NOISE TRAVELING THROUGH PENETRATIONS.
6. TECHNOLOGY CABLING SHALL BE ROUTED IN SEPARATE PATHWAYS IN J-HOOKS, CONDUITS, CONDUIT SLEEVES, CORES, ETC. THROUGHOUT THE ENTIRE PATHWAY. DIFFERENT MEDIA TYPES (DATA, VIDEO, SECURITY, ETC.) SHALL NOT SHARE THE SAME J-HOOK, CONDUIT, CONDUIT SLEEVE, CORE, ETC.
7. UNLESS NOTED OTHERWISE, ALL CONDUITS FOR TECHNOLOGY DEVICES SHALL ROUTE FROM THE DEVICE LOCATION AND TERMINATE ABOVE AN ACCESSIBLE CEILING (AN OPEN CEILING OR CLOUD TYPE CEILING IS NOT CONSIDERED AN ACCESSIBLE CEILING) IN THE SAME ROOM WHERE THE DEVICE IS LOCATED. IF THE ROOM WHERE THE DEVICE IS LOCATED DOES NOT HAVE AN ACCESSIBLE CEILING, THE CONDUIT SHALL ROUTE TO THE NEAREST ACCESSIBLE CEILING OFF A MAIN CORRIDOR. CONDUIT PATHWAY SHALL TAKE THE SHORTEST ROUTE TO THE APPLICABLE MDF / IDF ROOM TO MINIMIZE THE CABLE LENGTH ENSURING CABLE LENGTH DOES NOT EXCEED 275 FEET.
8. UNLESS NOTED OTHERWISE ALL CONDUITS SHALL BE HOMERUN FROM THE DEVICE LOCATION AND NO DAISY CHAINING OF DEVICES / ROUGH-INS SHALL BE ALLOWED.
9. CONDUIT SEGMENTS SHALL BE NO MORE THAN 100-FEET IN LENGTH WITH NO MORE THAN THE EQUIVALENT OF (2) 90 DEGREE BENDS BETWEEN PULLING POINTS.
10. CONDUITS SHALL MAINTAIN A BEND RADIUS OF 6 TIMES THE DIAMETER OF THE CONDUIT FOR CONDUITS 2-INCHES OR SMALLER AND 10 TIMES THE DIAMETER OF THE CONDUIT FOR CONDUITS GREATER THAN 2-INCHES.
11. ALL CONDUITS SHALL HAVE A PULL STRING INSTALLED FOR PULLING OF CABLE. CLEARLY LABEL AS "PULL STRING" INDICATING OPPOSITE END LOCATION.
12. ALL SPARE CONDUITS OR CONDUITS FILLED WITH LESS THAN THE MAXIMUM ALLOWED FILL RATIO SHALL HAVE A PULL STRING INSTALLED AND LEFT FOR FUTURE PULLING OF CABLE. CLEARLY LABEL AS "PULL STRING" INDICATING OPPOSITE END LOCATION.
13. EQUIPMENT NOT RELATED TO THE SUPPORT OF THE TELECOMMUNICATIONS ROOM (E.G., PIPING, DUCTWORK, PNEUMATIC TUBING) SHALL NOT BE INSTALLED IN, PASS THROUGH, OR ENTER THE TELECOMMUNICATIONS ROOM
14. ALL CONDUITS FOR TECHNOLOGY DEVICES SHALL ROUTE FROM THE DEVICE LOCATION AND TERMINATE ABOVE A LAY- IN TYPE CEILING IN THE SAME ROOM WHERE THE DEVICE IS LOCATED. IF THE ROOM WHERE THE DEVICE IS LOCATED DOES NOT HAVE A LAY-IN TYPE CEILING TO PREVENT THE CABLES FROM BEING EXPOSED, THE CONDUIT SHALL ROUTE TO THE NEAREST LAY-IN TYPE CEILING OFF A MAIN CORRIDOR. THE CONDUIT PATHWAY SHALL TAKE THE SHORTEST ROUTE TO THE MAIN CORRIDOR TO MINIMIZE THE CABLE LENGTH ENSURING THE CABLE LENGTH DOES NOT EXCEED 275 FEET. CONDUIT, CONNECTIONS, J-BOXES, SUSPENSION, ANCHORAGES, AND OTHER CONDUIT COMPONENTS EXPOSED TO VIEW IN PUBLIC SPACES SHALL BE ROUTED AND INSTALLED CAREFULLY TO MINIMIZE VISUAL IMPACT AND SHALL BE FULLY PAINTED TO MATCH UNLESS NOTED OTHERWISE.

TECHNOLOGY FLOOR PLAN KEYED NOTES

1. (2) 2-INCH EMT CONDUIT SLEEVES ABOVE ACCESSIBLE CEILING WITH NYLON BUSHING ON EACH END AND SECURED TO WALL. CONDUIT SLEEVES SHALL BE USED FOR LOW VOLTAGE TECHNOLOGY CABLE ONLY. (BY DIV 26)
2. (4) 4-INCH EMT CONDUIT SLEEVES ABOVE ACCESSIBLE CEILING WITH NYLON BUSHINGS ON EACH END AND SECURED TO WALL. CONDUIT SLEEVES SHALL BE USED FOR LOW VOLTAGE TECHNOLOGY CABLE ONLY. (BY DIV 26)
3. APPROXIMATE ROUTE CONDUIT SHALL TAKE TO A LAY- IN TYPE CEILING. THE CONDUIT SHALL BE INSTALLED PARALLEL OR PERPENDICULAR TO THE WALLS AND IN THE MOST DIRECT MANNER POSSIBLE TO THE NEAREST LAY-IN TYPE CEILING OFF A MAIN CORRIDOR TO MINIMIZE THE CABLE LENGTH, ENSURING THE CABLE LENGTH DOES NOT EXCEED 275 FEET. (BY DIV 26)
4. (4) 2-INCH EMT CONDUITS WITH LARGE SWEEPS FROM THE ABOVE CEIING SPACE OF THE PLAN EAST SIDE TO THE ABOVE CEILING SPACE OF THE PLAN WEST SIDE. ARCHITECT SHALL HIDE CONDUITS INSIDE THE PREFABRICATED WOOD TRUSS. CONTRACTOR SHALL REFER TO ARCHITECTUAL PLAN FOR EXACT ROUGH IN REQUIREMENTS. NO PULL BOXES SHALL BE INSTALLED. UPON COMPLETION OF THE CABLE INTALL CONTRACTOR SHALL PROVIDE PULL STRINGS IN CONDUITS FOR OWNERS FUTURE ADDS MOVES AND CHANGES. CONTRACTOR SHALL PROVIDE NYLON BUSHINGS AND PROTECTIVE CAPS ON EACH END OF THE CONDUITS. THESE CONDUITS SHALL BE RESERVED FOR LOW VOLTAGE CABLE ONLY. CONTRACTOR SHALL REFER TO THE ELECTRICAL AND ARCHITECTUL DRAWINGS FOR EXACT ROUGH IN DETAILS. (BY DIV. 26)
5. FLOOR BOX AS SPECIFIED AND INSTALLED BY DIVISION 26. PROVIDE (2) 1-1/4-INCH CONDUITS DEDICATED FOR LOW VOLTAGE FROM THE FLOOR BOX THROUGH TO ABOVE ACCESSIBLE CEILING AS SHOWN IN THE TECHNOLOGY DRAWINGS. REFER TO ARCHITECTURAL AND ELECTRICAL DRAWINGS FOR EXACT LOCATION AND ADDITIONAL CONDUIT ROUGH-IN REQUIREMENTS PRIOR TO INSTALLATION. (BY DIV 26)
6. DATA CABLE WITH 20-FEET OF SLACK NEATLY COILED AND STORED ON J-HOOK ABOVE ACCESSIBLE CEILING FOR OWNER PROVIDED / OWNER INSTALLED CEILING MOUNTED WIRELESS ACCESS POINT. CONTRACTOR SHALL PLACE A GREEN ADHESIVE DOT AND A LABEL MIRRORING THE LABEL ON THE SURFACE MOUNTED BOX ON THE CEILING GRID DIRECTLY BELOW THE OUTLET LOCATION FOR FUTURE IDENTIFICATION OF THE OUTLET LOCATION. (BY DIV 27)
7. DATA CABLE FOR OWNER PROVIDED / OWNER INSTALLED INTERIOR WALL MOUNTED WIRELESS ACCESS POINT WHERE THERE IS NOT AN ACCESSIBLE CEILING. DATA CABLE SHALL BE TERMINATED WITH A SURFACE MOUNTED BOX LOCATED INSIDE THE CAMERA ROUGH-IN. REFER TO ELECTRICAL DRAWINGS FOR EXACT LOCATION AND CONDUIT ROUGH-IN REQUIREMENTS. (BY DIV 26)
8. EMPTY ROUGH IN LOCATION FOR OWNER PROVIDED / OWNER INSTALLED WALL MOUNTED INPUT FACEPLATE. ROUGH IN SHALL BE RESERVED FOR THE OWNER TO INSTALL THEIR OWN HDMI CABLE TO THE OWNER PROVIDED OWNER INSTALLED WALL MOUNTED MONITOR. ALL FACEPLATES, HDMI INSERTS AND HDMI CABLES SHALL BE OWNER PROVIDED/OWNER INSTALLED. (BY DIV 26/OWNER)
9. DATA CABLE FOR OWNERS PREFERRED CONTRACTOR PROVIDED / OWNER PREFERRED CONTRACTOR INSTALLED WALL MOUNTED MONITOR WHERE THERE IS AN ACCESSIBLE CEILING. DATA CABLE SHALL BE TERMINATED WITH A SURFACE MOUNTED BOX LOCATED INSIDE THE WALL MOUNTED MONITOR ROUGH-IN. (ROUGH IN BY DIV 26, MONITOR BY WILL ACQUIRED THROUGH THE FF&E PROGRAM)
10. DATA CABLE WITH 20-FEET OF SLACK NEATLY COILED AND STORED ON J-HOOK ABOVE ACCESSIBLE CEILING FOR CONTRACTOR PROVIDED / CONTRACTOR INSTALLED CEILING MOUNTED VIDEO SURVEILLANCE CAMERA. CONTRACTOR SHALL PLACE A YELLOW ADHESIVE DOT AND A LABEL MIRRORING THE LABEL ON THE SURFACE MOUNTED BOX ON THE CEILING GRID DIRECTLY BELOW THE OUTLET LOCATION FOR FUTURE IDENTIFICATION OF THE OUTLET LOCATION. REFER TO SECURITY DRAWINGS FOR EXACT LOCATION AND CONDUIT ROUGH-IN REQUIREMENTS. (BY DIV 27)
11. DATA CABLE FOR CONTRACTOR PROVIDED / CONTRACTOR INSTALLED INTERIOR WALL MOUNTED VIDEO SURVEILLANCE CAMERA WHERE THERE IS NOT AN ACCESSIBLE CEILING. DATA CABLE SHALL BE TERMINATED WITH A SURFACE MOUNTED BOX LOCATED INSIDE THE CAMERA ROUGH-IN. REFER TO SECURITY DRAWINGS FOR EXACT LOCATION AND CONDUIT ROUGH-IN REQUIREMENTS. (BY DIV 26)
12. ALL LOW VOLTAGE CONDUITS IN THIS AREA SHALL BE ROUTED AND STUB INTO THE ABOVE CEILING SPACE OF CONFERENCE ROOM ABOVE. (BY DIV 26)
13. ALL LOW VOLTAGE CABLES IN THE TICKET BOOTH SHALL BE INSTALLED USING OSP RATED CABLE AND RAN IN THE MOST DIRECT MANNER TO THE IDF ROOM. (BY DIV 26/27)
14. DATA CABLE FOR CONTRACTOR PROVIDED / CONTRACTOR INSTALLED EXTERIOR WALL MOUNTED VIDEO SURVEILLANCE CAMERA WHERE THERE IS NOT AN ACCESSIBLE CEILING. DATA CABLE SHALL BE TERMINATED WITH A SURFACE MOUNTED BOX LOCATED INSIDE THE CAMERA ROUGH-IN. REFER TO SECURITY DRAWINGS FOR EXACT LOCATION AND CONDUIT ROUGH-IN REQUIREMENTS. (BY DIV 26)
15. DATA CABLES FOR CONTRACTOR PROVIDED / CONTRACTOR INSTALLED ACCESS CONTROL SECURITY PANEL. REFER TO SECURITY DRAWINGS FOR EXACT LOCATION AND CONDUIT ROUGH-IN REQUIREMENTS. (BY DIV 26)
16. DATA CABLE FOR MECHANICAL / ELECTRICAL CONTROLS. REFER TO MECHANICAL / ELECTRICAL DRAWINGS FOR EXACT LOCATION AND CONDUIT ROUGH-IN REQUIREMENTS. (BY DIV 26)
17. FLOOR BOX AS SPECIFIED BY DIVISION 27 BUT PROVIDED AND INSTALLED BY DIV 26. SEE 2/T402. PROVIDE (2) 1-1/4-INCH CONDUITS DEDICATED FOR LOW VOLTAGE FROM THE FLOOR BOX THROUGH TO ABOVE ACCESSIBLE CEILING AS SHOWN IN THE TECHNOLOGY DRAWINGS. CONTRACTOR SHALL PROVIDE AND INSTALL (1) HDMI FACEPLATE WITH (1) HDMI INPUT AND (1) HDMI CABLE TO THE OP/OI FLAT PANEL DISPLAY AND CONNECT TO HDMI SOURCE #2. CONTRACTOR SHALL LABEL THE HDMI CABLE AND FACEPLATE WITH THE HDMI SOURCE NUMBER. REFER TO ARCHITECTURAL AND ELECTRICAL DRAWINGS FOR EXACT LOCATION AND ADDITIONAL CONDUIT ROUGH-IN REQUIREMENTS PRIOR TO INSTALLATION. (BY DIV 26/27)
18. MULTI-MEDIA FACEPLATE WITH (1) HDMI INPUT. MOUNT 18-INCHES A.F.F. TO VERTICAL CENTER WITH (2) 1-INCH CONDUITS TO THE ABOVE CEILING SPACE. CONTRACTOR SHALL PROVIDE AND INSTALL (1) HDMI FACEPLATE WITH (1) HDMI INPUT AND (1) HDMI CABLE TO THE OP/OI FLAT PANEL DISPLAY AND CONNECT TO HDMI SOURCE #1. CONTRACTOR SHALL LABEL THE HDMI CABLE AND FACEPLATE WITH THE HDMI SOURCE NUMBER. (BY DIV 26/27)
19. MULTIMEDIA ROUGH IN WITH (1) PASS THROUGH FACEPLATE TO SUPPORT THE ROUTING OF HDMI CABLES FROM THE HDMI WALL PLATE AND FLOOR BOX TO THE OP/OI FLAT PANEL DISPLAY. MOUNT 65-INCHES A.F.F. TO VERTICAL CENTER WITH (2) 1-INCH CONDUITS TO THE ABOVE CEILING SPACE. (BY DIV 26/27)
20. MULTI-MEDIA FACE PLATE WITH (1) HDMI INPUT INSIDE THE FLOOR BOX. CONTRACTOR SHALL PROVIDE AND INSTALL (1) HDMI FACEPLATE WITH (1) HDMI INPUT AND (1) HDMI CABLE TO THE OP/OI FLAT PANEL DISPLAY AND CONNECT TO HDMI SOURCE #2. CONTRACTOR SHALL LABEL THE HDMI CABLE AND FACEPLATE WITH THE HDMI SOURCE NUMBER. (BY DIV 26/27)
21. DATA CABLE FOR MECHANICAL / ELECTRICAL CONTROLS. REFER TO MECHANICAL / ELECTRICAL DRAWINGS FOR EXACT LOCATION AND CONDUIT ROUGH-IN REQUIREMENTS. (BY DIV 26)
22. APPROXIMATE LOCATION CONDUIT SHALL DROP DOWN TO THE ABOVE CEILING SPACE. CONDUIT SHALL TERMINATE NO FARTHER THAN 2 FEET FROM THE DROP TILE CEILING. (BY DIV 26)

TEXAS PARKS & WILDLIFE

FORD POWELL & CARSON
Architects & Planners, Inc.
Architecture
Planning
Preservation
Interior Design
1138 East Commerce Street
San Antonio, Texas 78205
210/226-1246
FPC# 92705

REGISTERED COMMUNICATIONS DISTRIBUTION DESIGNER
BICSI
BRIAN K COMBS
BICSI ID# 118077
EXPIRES 12-31-21
* RCDD *
07-03-2020

COMBS Consulting Group
technology & security
SAN ANTONIO
8200 Wurzbach Rd., Ste. 101
San Antonio, Texas 78229
Phone : 210-998-7887
AUSTIN
4030 W. Braker Ridge, Bldg. 4, Ste. 600
Austin, Texas 78759

TYLER STATE PARK
HEADQUARTERS REPLACEMENT PHASE 1
PROJECT NUMBER: 112741

DATE: 07/03/2020
DESIGNED BY: DR
DRAWN BY: PM
REVIEWED BY: DR

no.	revision	date

SHEET TITLE
TECHNOLOGY FLOOR PLANS

SHEET NUMBER
T202

CONSTRUCTION DOCUMENTS

PATH: G:\Projects – San Antonio – Active\Tyler Texas State Park\3 – Drawings\1 – Current Drawings\192705-Tyler SP Bldg_TECH_v2019.rvt
DATE: 7/2/2020 8:28:09 AM

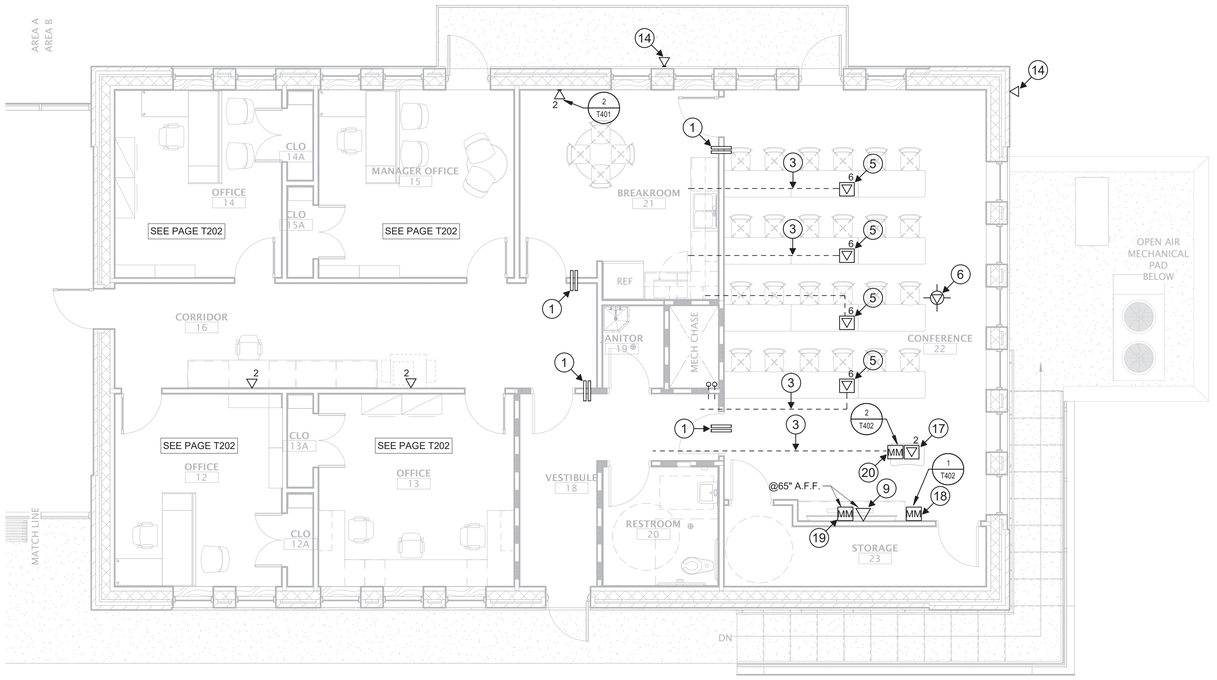

1 T203 TECHNOLOGY ENLARGED FLOOR PLAN AREA B
3/16" = 1'-0"

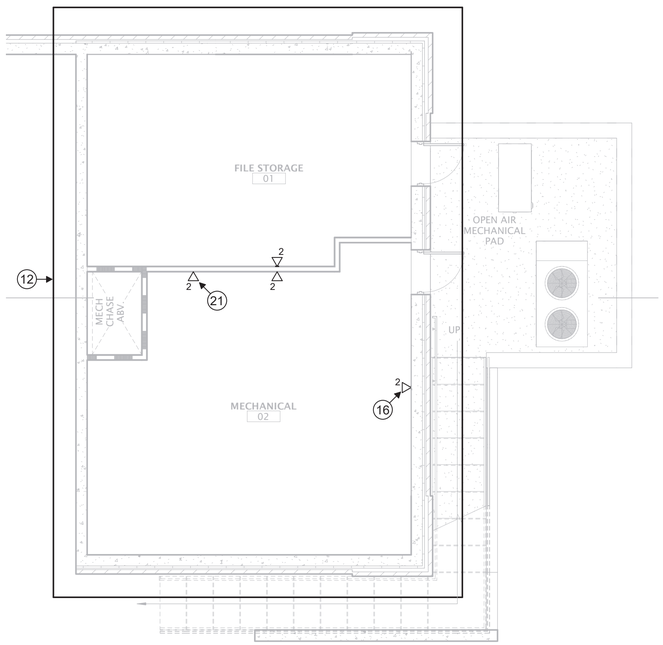

2 T203 TECHNOLOGY BASEMENT
3/16" = 1'-0"

TECHNOLOGY FLOOR PLAN GENERAL NOTES

1. THE TECHNOLOGY REGION / WIRING BOUNDARIES ARE IDENTIFIED ON THE OVERALL SHEETS ONLY AND NOT ON THE ENLARGED SHEETS. CONTRACTOR SHALL REFER TO THE OVERALL SHEETS FOR ALL TECHNOLOGY REGIONS / WIRING BOUNDARIES.
2. ALL CONDUIT PATHWAYS, ROUGH-INS, BACKBOXES, FLOOR BOXES, CONDUIT SLEEVES, ETC. INDICATED ON THE TECHNOLOGY DRAWINGS ARE TO BE PROVIDED AND INSTALLED BY DIVISION 26.
3. ALL POWER INDICATED ON THE TECHNOLOGY DRAWINGS IS TO BE PROVIDED AND INSTALLED BY DIVISION 26.
4. CONTRACTOR SHALL RESTORE ALL PENETRATIONS PROVIDED THROUGH FIRE RATED WALLS/STRUCTURES FOR TECHNOLOGY CABLING BACK TO THE ORIGINAL RATING.
5. CONTRACTOR SHALL RESTORE ALL PENETRATIONS PROVIDED THROUGH NON-RATED WALLS/STRUCTURES FOR TECHNOLOGY CABLING FOR SOUND TO REDUCE NOISE TRAVELING THROUGH PENETRATIONS.
6. TECHNOLOGY CABLING SHALL BE ROUTED IN SEPARATE PATHWAYS IN J-HOOKS, CONDUITS, CONDUIT SLEEVES, CORES, ETC. THROUGHOUT THE ENTIRE PATHWAY. DIFFERENT MEDIA TYPES (DATA, VIDEO, SECURITY, ETC.) SHALL NOT SHARE THE SAME J-HOOK, CONDUIT, CONDUIT SLEEVE, CORE, ETC.
7. UNLESS NOTED OTHERWISE, ALL CONDUITS FOR TECHNOLOGY DEVICES SHALL ROUTE FROM THE DEVICE LOCATION AND TERMINATE ABOVE AN ACCESSIBLE CEILING (AN OPEN CEILING OR CLOUD TYPE CEILING IS NOT CONSIDERED AN ACCESSIBLE CEILING) IN THE SAME ROOM WHERE THE DEVICE IS LOCATED. IF THE ROOM WHERE THE DEVICE IS LOCATED DOES NOT HAVE AN ACCESSIBLE CEILING, THE CONDUIT SHALL ROUTE TO THE NEAREST ACCESSIBLE CEILING OFF A MAIN CORRIDOR. CONDUIT PATHWAY SHALL TAKE THE SHORTEST ROUTE TO THE APPLICABLE MDF / IDF ROOM TO MINIMIZE THE CABLE LENGTH ENSURING CABLE LENGTH DOES NOT EXCEED 275 FEET.
8. UNLESS NOTED OTHERWISE ALL CONDUITS SHALL BE HOMERUN FROM THE DEVICE LOCATION AND NO DAISY CHAINING OF DEVICES / ROUGH-INS SHALL BE ALLOWED.
9. CONDUIT SEGMENTS SHALL BE NO MORE THAN 100-FEET IN LENGTH WITH NO MORE THAN THE EQUIVALENT OF (2) 90 DEGREE BENDS BETWEEN PULLING POINTS.
10. CONDUITS SHALL MAINTAIN A BEND RADIUS OF 6 TIMES THE DIAMETER OF THE CONDUIT FOR CONDUITS 2-INCHES OR SMALLER AND 10 TIMES THE DIAMETER OF THE CONDUIT FOR CONDUITS GREATER THAN 2-INCHES.
11. ALL CONDUITS SHALL HAVE A PULL STRING INSTALLED FOR PULLING OF CABLE. CLEARLY LABEL AS "PULL STRING" INDICATING OPPOSITE END LOCATION.
12. ALL SPARE CONDUITS OR CONDUITS FILLED WITH LESS THAN THE MAXIMUM ALLOWED FILL RATIO SHALL HAVE A PULL STRING INSTALLED AND LEFT FOR FUTURE PULLING OF CABLE. CLEARLY LABEL AS "PULL STRING" INDICATING OPPOSITE END LOCATION.
13. EQUIPMENT NOT RELATED TO THE SUPPORT OF THE TELECOMMUNICATIONS ROOM (E.G., PIPING, DUCTWORK, PNEUMATIC TUBING) SHALL NOT BE INSTALLED IN, PASS THROUGH, OR ENTER THE TELECOMMUNICATIONS ROOM
14. ALL CONDUITS FOR TECHNOLOGY DEVICES SHALL ROUTE FROM THE DEVICE LOCATION AND TERMINATE ABOVE A LAY- IN TYPE CEILING IN THE SAME ROOM WHERE THE DEVICE IS LOCATED. IF THE ROOM WHERE THE DEVICE IS LOCATED DOES NOT HAVE A LAY-IN TYPE CEILING TO PREVENT THE CABLES FROM BEING EXPOSED, THE CONDUIT SHALL ROUTE TO THE NEAREST LAY-IN TYPE CEILING OFF A MAIN CORRIDOR. THE CONDUIT PATHWAY SHALL TAKE THE SHORTEST ROUTE TO THE MAIN CORRIDOR TO MINIMIZE THE CABLE LENGTH ENSURING THE CABLE LENGTH DOES NOT EXCEED 275 FEET. CONDUIT, CONNECTIONS, J-BOXES, SUSPENSION, ANCHORAGES, AND OTHER CONDUIT COMPONENTS EXPOSED TO VIEW IN PUBLIC SPACES SHALL BE ROUTED AND INSTALLED CAREFULLY TO MINIMIZE VISUAL IMPACT AND SHALL BE FULLY PAINTED TO MATCH UNLESS NOTED OTHERWISE.

TECHNOLOGY FLOOR PLAN KEYED NOTES

1. (2) 2-INCH EMT CONDUIT SLEEVES ABOVE ACCESSIBLE CEILING WITH NYLON BUSHING ON EACH END AND SECURED TO WALL. CONDUIT SLEEVES SHALL BE USED FOR LOW VOLTAGE TECHNOLOGY CABLE ONLY. (BY DIV 26)
2. (4) 4-INCH EMT CONDUIT SLEEVES ABOVE ACCESSIBLE CEILING WITH NYLON BUSHINGS ON EACH END AND SECURED TO WALL. CONDUIT SLEEVES SHALL BE USED FOR LOW VOLTAGE TECHNOLOGY CABLE ONLY. (BY DIV 26)
3. APPROXIMATE ROUTE CONDUIT SHALL TAKE TO A LAY- IN TYPE CEILING. THE CONDUIT SHALL BE INSTALLED PARALLEL OR PERPENDICULAR TO THE WALLS AND IN THE MOST DIRECT MANNER POSSIBLE TO THE NEAREST LAY-IN TYPE CEILING OFF A MAIN CORRIDOR TO MINIMIZE THE CABLE LENGTH, ENSURING THE CABLE LENGTH DOES NOT EXCEED 275 FEET. (BY DIV 26)
4. (4) 2-INCH EMT CONDUITS WITH LARGE SWEEPS FROM THE ABOVE CEIING SPACE OF THE PLAN EAST SIDE TO THE ABOVE CEILING SPACE OF THE PLAN WEST SIDE. ARCHITECT SHALL HIDE CONDUITS INSIDE THE PREFABRICATED WOOD TRUSS. CONTRACTOR SHALL REFER TO ARCHITECTUAL PLAN FOR EXACT ROUGH IN REQUIREMENTS. NO PULL BOXES SHALL BE INSTALLED. UPON COMPLETION OF THE CABLE INTALL CONTRACTOR SHALL PROVIDE PULL STRINGS IN CONDUITS FOR OWNERS FUTURE ADDS MOVES AND CHANGES. CONTRACTOR SHALL PROVIDE NYLON BUSHINGS AND PROTECTIVE CAPS ON EACH END OF THE CONDUITS. THESE CONDUITS SHALL BE RESERVED FOR LOW VOLTAGE CABLE ONLY. CONTRACTOR SHALL REFER TO THE ELECTRICAL AND ARCHITECTUL DRAWINGS FOR EXACT ROUGH IN DETAILS. (BY DIV. 26)
5. FLOOR BOX AS SPECIFIED AND INSTALLED BY DIVISION 26. PROVIDE (2) 1-1/4-INCH CONDUITS DEDICATED FOR LOW VOLTAGE FROM THE FLOOR BOX THROUGH TO ABOVE ACCESSIBLE CEILING AS SHOWN IN THE TECHNOLOGY DRAWINGS. REFER TO ARCHITECTURAL AND ELECTRICAL DRAWINGS FOR EXACT LOCATION AND ADDITIONAL CONDUIT ROUGH-IN REQUIREMENTS PRIOR TO INSTALLATION. (BY DIV 26)
6. DATA CABLE WITH 20-FEET OF SLACK NEATLY COILED AND STORED ON J-HOOK ABOVE ACCESSIBLE CEILING FOR OWNER PROVIDED / OWNER INSTALLED CEILING MOUNTED WIRELESS ACCESS POINT. CONTRACTOR SHALL PLACE A GREEN ADHESIVE DOT AND A LABEL MIRRORING THE LABEL ON THE SURFACE MOUNTED BOX ON THE CEILING GRID DIRECTLY BELOW THE OUTLET LOCATION FOR FUTURE IDENTIFICATION OF THE OUTLET LOCATION. (BY DIV 27)
7. DATA CABLE FOR OWNER PROVIDED / OWNER INSTALLED INTERIOR WALL MOUNTED WIRELESS ACCESS POINT WHERE THERE IS NOT AN ACCESSIBLE CEILING. DATA CABLE SHALL BE TERMINATED WITH A SURFACE MOUNTED BOX LOCATED INSIDE THE CAMERA ROUGH-IN. REFER TO ELECTRICAL DRAWINGS FOR EXACT LOCATION AND CONDUIT ROUGH-IN REQUIREMENTS. (BY DIV 26)
8. EMPTY ROUGH IN LOCATION FOR OWNER PROVIDED / OWNER INSTALLED WALL MOUNTED INPUT FACEPLATE. ROUGH IN SHALL BE RESERVED FOR THE OWNER TO INSTALL THEIR OWN HDMI CABLE TO THE OWNER PROVIDED OWNER INSTALLED WALL MOUNTED MONITOR. ALL FACEPLATES, HDMI INSERTS AND HDMI CABLES SHALL BE OWNER PROVIDED/OWNER INSTALLED. (BY DIV 26/OWNER)
9. DATA CABLE FOR OWNERS PREFERRED CONTRACTOR PROVIDED / OWNER PREFERRED CONTRACTOR INSTALLED WALL MOUNTED MONITOR WHERE THERE IS AN ACCESSIBLE CEILING. DATA CABLE SHALL BE TERMINATED WITH A SURFACE MOUNTED BOX LOCATED INSIDE THE WALL MOUNTED MONITOR ROUGH-IN. (ROUGH IN BY DIV 26, MONITOR BY WILL ACQUIRED THROUGH THE FF&E PROGRAM)
10. DATA CABLE WITH 20-FEET OF SLACK NEATLY COILED AND STORED ON J-HOOK ABOVE ACCESSIBLE CEILING FOR CONTRACTOR PROVIDED / CONTRACTOR INSTALLED CEILING MOUNTED VIDEO SURVEILLANCE CAMERA. CONTRACTOR SHALL PLACE A YELLOW ADHESIVE DOT AND A LABEL MIRRORING THE LABEL ON THE SURFACE MOUNTED BOX ON THE CEILING GRID DIRECTLY BELOW THE OUTLET LOCATION FOR FUTURE IDENTIFICATION OF THE OUTLET LOCATION. REFER TO SECURITY DRAWINGS FOR EXACT LOCATION AND CONDUIT ROUGH-IN REQUIREMENTS. (BY DIV 27)
11. DATA CABLE FOR CONTRACTOR PROVIDED / CONTRACTOR INSTALLED INTERIOR WALL MOUNTED VIDEO SURVEILLANCE CAMERA WHERE THERE IS NOT AN ACCESSIBLE CEILING. DATA CABLE SHALL BE TERMINATED WITH A SURFACE MOUNTED BOX LOCATED INSIDE THE CAMERA ROUGH-IN. REFER TO SECURITY DRAWINGS FOR EXACT LOCATION AND CONDUIT ROUGH-IN REQUIREMENTS. (BY DIV 26)
12. ALL LOW VOLTAGE CONDUITS IN THIS AREA SHALL BE ROUTED AND STUB INTO THE ABOVE CEILING SPACE OF CONFERENCE ROOM ABOVE. (BY DIV 26)
13. ALL LOW VOLTAGE CABLES IN THE TICKET BOOTH SHALL BE INSTALLED USING OSP RATED CABLE AND RAN IN THE MOST DIRECT MANNER TO THE IDF ROOM. (BY DIV 26/27)
14. DATA CABLE FOR CONTRACTOR PROVIDED / CONTRACTOR INSTALLED EXTERIOR WALL MOUNTED VIDEO SURVEILLANCE CAMERA WHERE THERE IS NOT AN ACCESSIBLE CEILING. DATA CABLE SHALL BE TERMINATED WITH A SURFACE MOUNTED BOX LOCATED INSIDE THE CAMERA ROUGH-IN. REFER TO SECURITY DRAWINGS FOR EXACT LOCATION AND CONDUIT ROUGH-IN REQUIREMENTS. (BY DIV 26)
15. DATA CABLES FOR CONTRACTOR PROVIDED / CONTRACTOR INSTALLED ACCESS CONTROL SECURITY PANEL. REFER TO SECURITY DRAWINGS FOR EXACT LOCATION AND CONDUIT ROUGH-IN REQUIREMENTS. (BY DIV 26)
16. DATA CABLE FOR FIRE ALARM CONTROL PANEL. REFER TO FIRE ALARM DRAWINGS AND COORDINATE WITH THE FIRE ALARM REP FOR EXACT LOCATION AND CONDUIT ROUGH-IN REQUIREMENTS. (BY DIV 26)
17. FLOOR BOX AS SPECIFIED BY DIVISION 27 BUT PROVIDED AND INSTALLED BY DIV 26. SEE 2/T402. PROVIDE (2) 1-1/4-INCH CONDUITS DEDICATED FOR LOW VOLTAGE FROM THE FLOOR BOX THROUGH TO ABOVE ACCESSIBLE CEILING AS SHOWN IN THE TECHNOLOGY DRAWINGS. CONTRACTOR SHALL PROVIDE AND INSTALL (1) HDMI FACEPLATE WITH (1) HDMI INPUT AND (1) HDMI CABLE TO THE OP/OI FLAT PANEL DISPLAY AND CONNECT TO HDMI SOURCE #2. CONTRACTOR SHALL LABEL THE HDMI CABLE AND FACEPLATE WITH THE HDMI SOURCE NUMBER. REFER TO ARCHITECTURAL AND ELECTRICAL DRAWINGS FOR EXACT LOCATION AND ADDITIONAL CONDUIT ROUGH-IN REQUIREMENTS PRIOR TO INSTALLATION. (BY DIV 26/27)
18. MULTI-MEDIA FACEPLATE WITH (1) HDMI INPUT. MOUNT 18-INCHES A.F.F. TO VERTICAL CENTER WITH (2) 1-INCH CONDUITS TO THE ABOVE CEILING SPACE. CONTRACTOR SHALL PROVIDE AND INSTALL (1) HDMI FACEPLATE WITH (1) HDMI INPUT AND (1) HDMI CABLE TO THE OP/OI FLAT PANEL DISPLAY AND CONNECT TO HDMI SOURCE #1. CONTRACTOR SHALL LABEL THE HDMI CABLE AND FACEPLATE WITH THE HDMI SOURCE NUMBER. (BY DIV 26/27)
19. MULTIMEDIA ROUGH IN WITH (1) PASS THROUGH FACEPLATE TO SUPPORT THE ROUTING OF HDMI CABLES FROM THE HDMI WALL PLATE AND FLOOR BOX TO THE OP/OI FLAT PANEL DISPLAY. MOUNT 65-INCHES A.F.F. TO VERTICAL CENTER WITH (2) 1-INCH CONDUITS TO THE ABOVE CEILING SPACE. (BY DIV 26/27)
20. MULTI-MEDIA FACE PLATE WITH (1) HDMI INPUT INSIDE THE FLOOR BOX. CONTRACTOR SHALL PROVIDE AND INSTALL (1) HDMI FACEPLATE WITH (1) HDMI INPUT AND (1) HDMI CABLE TO THE OP/OI FLAT PANEL DISPLAY AND CONNECT TO HDMI SOURCE #2. CONTRACTOR SHALL LABEL THE HDMI CABLE AND FACEPLATE WITH THE HDMI SOURCE NUMBER. (BY DIV 26/27)
21. DATA CABLE FOR MECHANICAL / ELECTRICAL CONTROLS. REFER TO MECHANICAL / ELECTRICAL DRAWINGS FOR EXACT LOCATION AND CONDUIT ROUGH-IN REQUIREMENTS. (BY DIV 26)
22. APPROXIMATE LOCATION CONDUIT SHALL DROP DOWN TO THE ABOVE CEILING SPACE. CONDUIT SHALL TERMINATE NO FARTHER THAN 2 FEET FROM THE DROP TILE CEILING. (BY DIV 26)

TEXAS PARKS & WILDLIFE

FORD POWELL &CARSON
Architects & Planners, Inc.
Architecture
Planning
Preservation
Interior Design
1138 East Commerce Street
San Antonio, Texas 78205
210/226-1246
FPC# 92705

REGISTERED COMMUNICATIONS DISTRIBUTION DESIGNER
BICSI
BRIAN K COMBS
BICSI ID# 118077
EXPIRES 12-31-21
* RCDD *
07-03-2020

COMBS Consulting Group
technology & security
SAN ANTONIO
8200 Wurzbach Rd., Ste. 800
San Antonio, Texas 78229
Phone : 210-998-7887
AUSTIN
3000 Joe DiMaggio Blvd., Ste. 800
Austin, Texas 78729

TYLER STATE PARK
HEADQUARTERS REPLACEMENT PHASE 1
PROJECT NUMBER: 112741

DATE: 07/03/2020
DESIGNED BY: DR
DRAWN BY: PM
REVIEWED BY: DR

no.	revision	date

SHEET TITLE
TECHNOLOGY FLOOR PLANS

SHEET NUMBER
T203

CONSTRUCTION DOCUMENTS

DATE: 6/13/2020 4:02:46 PM PATH: G:\Projects - San Antonio - Active\Tyler Texas State Park\3 - Drawings\1 - Current Drawings\92705-Tyler SP Bldg_TECH_v2019.rvt

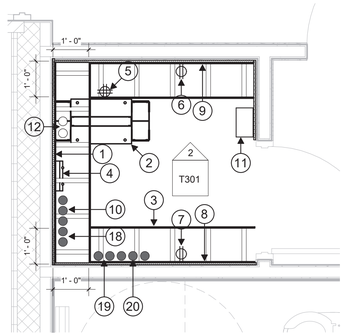

1 T301 IT ROOM LAYOUT - MTC
1/2" = 1'-0"

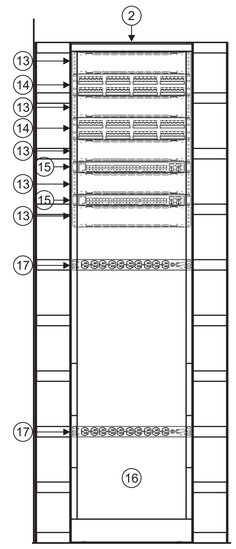

2 T301 IT ROOM EQUIPMENT RACK ELEVATION - MTC
1" = 1'-0"

MDF/IDF ROOM LAYOUT KEYED NOTES

1. 4-FEET X 8-FEET X 3/4-INCH A-B GRADE, VOID FREE, FIRE RATED PLYWOOD INSTALLED VERTICALLY STARTING AT 24-INCHES ABOVE FINISHED FLOOR ON ALL PERIMETER WALLS. PAINT WITH (2) COATS OF FIRE RETARDANT PAINT. (BY DIV. 27)
2. 19-INCH X 84-INCH EQUIPMENT RACK WITH VERTICAL D RIND TYPE WIRE MANAGERS. (BY DIV. 27)
3. 12-INCH LADDER RACK MOUNTED AT 87-INCHES ABOVE FINISHED FLOOR. (BY DIV. 27)
4. GROUND BUS BAR MOUNTED AT 84-INCHES ABOVE FINISHED FLOOR. (BY DIV. 27)
5. DEDICATED 20 AMP QUAD CIRCUIT WITH SIMPLEX NEMA 5-20R RECEPTACLE MOUNTED TO LADDER RACK AT REAR SIDE OF EQUIPMENT RACKS. (BY DIV. 26)
6. 20 AMP CIRCUIT WITH DUPLEX NEMA 5-20R RECEPTACLE FLUSH MOUNTED TO THE FINISHED WALL SURFACE AT 18-INCHES ABOVE FINISHED FLOOR. MAXIMUM OF (6) PER CIRCUIT. (BY DIV.26)
7. DEDICATED 20 AMP CIRCUIT HARDWIRED TO ACCESS CONTROL SECURITY PANEL. (BY DIV. 26)
8. 48-INCHES WIDE X 84-INCHES HIGH RESERVED FOR ACCESS CONTROL SYSTEM. (BY DIV. 27 / 28)
9. 48-INCHES WIDE X 84-INCHES HIGH RESERVED FOR SERVICE PROVIDER TERMINATION. (BY DIV. 27 / 28)
10. (3) 4-INCH CONDUITS TO 36-INCH X 36-INCH X 36-INCH MANHOLE FOR SERVICE PROVIDERS. TERMINATE CONDUITS 4-INCHES ABOVE FINISHED FLOOR AND NO FARTHER THAN 4-INCHES FROM THE WALL INSIDE THE MDF/IDF ROOM AND PROVIDE NYLON BUSHINGS, PULL STRING AND CAPS ON EACH END. (BY DIV. 26)
11. APPROXIMATE LOCATION OF SPLIT AC UNIT (BY DIV 26)
12. (2) 4-INCH CONDUIT SLEEVES FROM THE ABOVE CEILING SPACE TO ABOVE THE CABINET. CONTRACTOR SHALL SECURE CONDUIT SLEEVES TO THE WALL. (BY DIV 26)
13. (1) RU HORIZONTAL WIRE MANAGER (BY DIV 27)
14. CATEGORY 6 48 PORT PATCH PANEL. (BY DIV 27)
15. 48 PORT SWITCH (BY OWNER)
16. SPACED RESERVED FOR POWER OVER FIBER EQUIPMENT. (BY DIV 27/28)
17. RACK MOUNT HORIZONTAL POWER STRIP. (BY DIV 27)
18. (2) 2-INCH CONDUITS TO THE TICKET BOOTH. TERMINATE CONDUITS 4-INCHES ABOVE FINISHED FLOOR AND NO FARTHER THAN 4-INCHES FROM THE WALL INSIDE THE MDF/IDF ROOM AND PROVIDE NYLON BUSHINGS, PULL STRING AND CAPS ON EACH END. (BY DIV. 26)
19. (2) 1 1/4 -INCH CONDUITS TO THE POLE MOUNTED CAMERAS. TERMINATE CONDUITS 4-INCHES ABOVE FINISHED FLOOR AND NO FARTHER THAN 4-INCHES FROM THE WALL INSIDE THE MDF/IDF ROOM AND PROVIDE NYLON BUSHINGS, PULL STRING AND CAPS ON EACH END. (BY DIV. 26)
20. (3) 4-INCH CONDUITS TO 36-INCH X 36-INCH X 36-INCH MANHOLE FOR SERVICE PROVIDERS. TERMINATE CONDUITS 4-INCHES ABOVE FINISHED FLOOR AND NO FARTHER THAN 4-INCHES FROM THE WALL INSIDE THE MDF/IDF ROOM AND PROVIDE NYLON BUSHINGS, PULL STRING AND CAPS ON EACH END. (BY DIV. 26)

TEXAS PARKS & WILDLIFE

FORD POWELL &CARSON
Architects & Planners, Inc.
Architecture
Planning
Preservation
Interior Design
1138 East Commerce Street
San Antonio, Texas 78205
210/226-1246
FPC# 92705

REGISTERED COMMUNICATIONS DISTRIBUTION DESIGNER
BICSI
BRIAN K COMBS
BICSI ID# 118077
EXPIRES 12-31-21
RCDD
07-03-2020

COMBS Consulting Group
technology & security
SAN ANTONIO
8200 Vantage Dr., Ste. 100
San Antonio, Texas 78230
Phone : 210-998-7887
AUSTIN
4407 Bee Caves Rdg. 4, Ste. 600
Austin, Texas 78735

TYLER STATE PARK
HEADQUARTERS REPLACEMENT PHASE 1
PROJECT NUMBER: 112741

DATE: 07/03/2020
DESIGNED BY: DR
DRAWN BY: PM
REVIEWED BY: DR

no.	revision	date

SHEET TITLE
TECHNOLOGY ENLARGED PLANS & ELEVATIONS

SHEET NUMBER
T301

CONSTRUCTION DOCUMENTS

DATE: 7/2/2020 8:02:14 AM PATH: G:\Projects - San Antonio - Active\Tyler Texas State Park\3 - Drawings\1 - Current Drawings\92705-Tyler SP Rdg_TECH_v2019.rvt

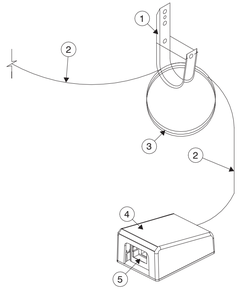

KEYED NOTES:

1. J-HOOK WITH RETAINER CLIP ABOVE ACCESSIBLE CEILING (BY DIV 27).
2. DATA CABLE ABOVE ACCESSIBLE CEILING (BY DIV 27).
3. 20 FOOT SERVICE LOOP ABOVE ACCESSIBLE CEILING NEATLY COILED AND SECURED TO J-HOOK (BY DIV 27).
4. SURFACE MOUNT BOX ABOVE ACCESSIBLE CEILING SECURED TO BUILDING STRUCTURE (BY DIV 27).
5. DATA INSERT (BY DIV 27).

1 T401 TYPICAL ABOVE CEILING SINGLE DATA OUTLET
NOT TO SCALE

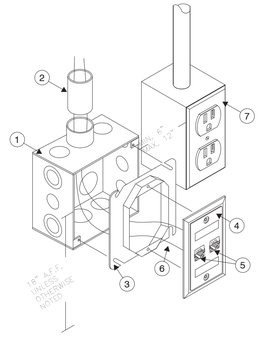

KEYED NOTES:

1. 4 11/16-INCH x 4 11/16-INCH x 2 1/8-INCH RECESSED DOUBLE GANG BOX (BY DIV 26).
2. 1-INCH EMT CONDUIT FROM DOUBLE GANG BOX WITH 200 LBS PULL STRING AND NYLON BUSHING STUBBED OUT ABOVE ACCESSIBLE CEILING IN THE SAME ROOM WHERE THE DEVICE IS LOCATED. IF THE ROOM WHERE THE DEVICE IS LOCATED DOES NOT HAVE AN ACCESSIBLE CEILING, THE CONDUIT SHALL ROUTE TO THE NEAREST ACCESSIBLE CEILING OFF OF A MAIN CORRIDOR. CONDUIT PATHWAY SHALL TAKE THE SHORTEST ROUTE TO THE APPLICABLE MDF/IDF ROOM TO MINIMIZE THE CABLE LENGTH (BY DIV 26).
3. SINGLE GANG REDUCER RING (BY DIV 26).
4. SINGLE GANG WALL PLATE WITH DESIGNATION IN WINDOW (BY DIV 27).
5. DATA INSERT (BY DIV 27).
6. CABLE AS SPECIFIED (BY DIV 27).
7. ELECTRICAL RECEPTACLE, GANG BOX AND CONDUIT SHOWN FOR REFERENCE ONLY (REFER TO DIV 26).

2 T401 TYPICAL DUAL DATA OUTLET CONFIGURATION
NOT TO SCALE

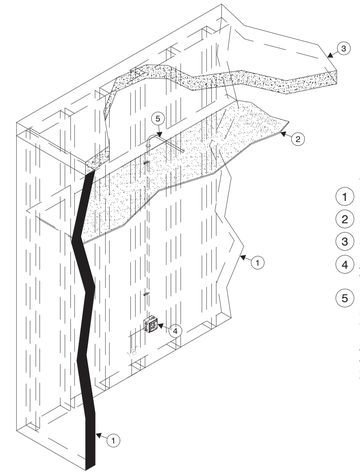

KEYED NOTES:

1. SCHEDULED WALL.
2. SCHEDULED CEILING.
3. SCHEDULED DECK ABOVE.
4. 4 11/16-INCH x 4 11/16-INCH x 2 1/8-INCH RECESSED DOUBLE GANG BOX WITH DOUBLE GANG PLASTER RING (BY DIV 26).
5. 1-INCH EMT CONDUIT FROM DOUBLE GANG BOX WITH 200 LBS PULL STRING AND NYLON BUSHING STUBBED OUT ABOVE ACCESSIBLE CEILING IN THE SAME ROOM WHERE THE DEVICE IS LOCATED. IF THE ROOM WHERE THE DEVICE IS LOCATED DOES NOT HAVE AN ACCESSIBLE CEILING, THE CONDUIT SHALL ROUTE TO THE NEAREST ACCESSIBLE CEILING OFF OF A MAIN CORRIDOR. CONDUIT PATHWAY SHALL TAKE THE SHORTEST ROUTE TO THE APPLICABLE MDF/IDF ROOM TO MINIMIZE THE CABLE LENGTH. (BY DIV 26).

3 T401 TYPICAL TECHNOLOGY CONDUIT ROUGH-IN
NOT TO SCALE

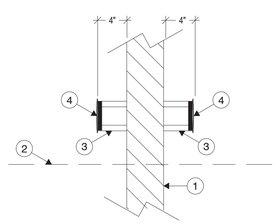

KEYED NOTES:

1. SCHEDULED WALL.
2. SCHEDULED CEILING.
3. CONDUIT SLEEVE (BY DIV 26).
4. NYLON BUSHING (BY DIV 26).

4 T401 TYPICAL CONDUIT SLEEVE GOING THROUGH WALL
NOT TO SCALE

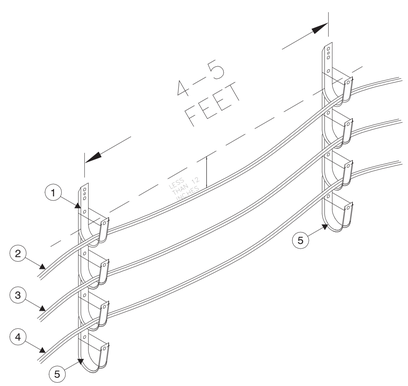

KEYED NOTES:

1. J-HOOK WITH RETAINER CLIP ABOVE ACCESSIBLE CEILING (BY DIV 27).
2. DATA CABLE ABOVE ACCESSIBLE CEILING (BY DIV 27).
3. A/V CABLE ABOVE ACCESSIBLE CEILING (BY DIV 27).
4. SECURITY CABLE ABOVE ACCESSIBLE CEILING (BY DIV 28).
5. SPARE J-HOOK (BY DIV 27).

5 T401 TYPICAL J-HOOK CABLE PATHWAY
NOT TO SCALE

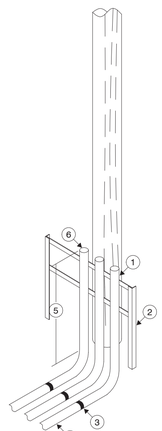

KEYED NOTES:

1. 4-INCH RIGID STEEL CONDUIT WRAPPED WITH PASCO PROTECTIVE TAPE SYSTEM (BY DIV 26).
2. UNISTRUT RACKING CONSTRUCTED IN FIELD (BY DIV 26).
3. PVC FEMALE ADAPTER (BY DIV 26).
4. 4-INCH SCHEDULE 40 PVC CONDUIT (BY DIV 26).
5. 4-INCH RIGID STEEL CONDUIT SHALL BE EXTENDED 36 INCHES ABOVE GRADE (BY DIV 26).
6. CONDUITS SHALL BE CAPPED AND SEALED TO PREVENT MOISTURE AND DEBRIS FROM ENTERING CONDUITS (BY DIV 26).

6 T401 TYPICAL J-HOOK CABLE PATHWAY
NOT TO SCALE

TEXAS PARKS & WILDLIFE

FORD POWELL &CARSON
Architects & Planners, Inc.
Architecture
Planning
Preservation
Interior Design
1138 East Commerce Street
San Antonio, Texas 78205
210/226-1246
FPC# 92705

REGISTERED COMMUNICATIONS DISTRIBUTION DESIGNER
BICSI
BRIAN K COMBS
BICSI ID# 118077
EXPIRES 12-31-21
07-03-2020

COMBS Consulting Group
technology & security
AUSTIN
9001 Research Blvd., Bldg. 4, Ste. 400
Austin, Texas 78758
SAN ANTONIO
8200 Wetmore Rd., Ste. 100
San Antonio, Texas 78230
Phone : 210-998-7887

TYLER STATE PARK
HEADQUARTERS REPLACEMENT PHASE 1
PROJECT NUMBER: 112741

DATE: 07/03/2020
DESIGNED BY: DR
DRAWN BY: PM
REVIEWED BY: DR

no.	revision	date

SHEET TITLE
TECHNOLOGY
TYPICAL DETAILS

SHEET NUMBER
T401

CONSTRUCTION DOCUMENTS

PATH: G:\Projects - San Antonio - Active\Tyler Texas State Park\3 - Drawings\1 - Current Drawings\92705-Tyler SP Bldg_TECH_v2019.rvt
DATE: 7/2/2020 8:02:14 AM

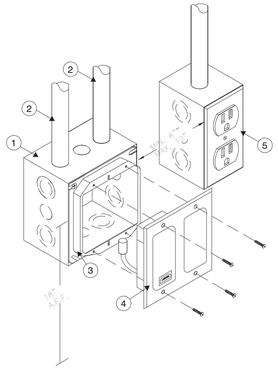

KEYED NOTES:

1. 4-11/16" X 4-11/16" X 2-1/8" RECESSED DOUBLE GANG BOX (BY DIV 26).
2. 1-INCH EMT CONDUIT FROM BACK BOX WITH 200 LBS PULL STRING AND NYLON BUSHING STUBBED OUT ABOVE ACCESSIBLE CEILING IN THE SAME ROOM WHERE THE DEVICE IS LOCATED (BY DIV 26).
3. DOUBLE-GANG PLASTER RING - DEVICE OPENING MUST HAVE RIGHT-ANGLE CORNERS TO AVOID PHYSICAL CONFLICTS WITH A|V DEVICE(S) (BY DIV 26).
4. AUDIO VISUAL INPUTS - HDMI INPUT PLATE - MANUFACTURER/MODEL NUMBER AS SPECIFIED. PROVIDE PLENUM-RATED RUNNER CABLES AND FLYING LEADS AS REQUIRED TO REACH FROM INPUT PLATE LOCATION TO DISPLAY/PROJECTOR LOCATION. REFER TO DRAWINGS, SCHEDULES AND SPECIFICATIONS FOR ADDITIONAL INFORMATION (BY DIV 27). COORDINATE FINISH WITH ARCHITECT.
5. ELECTRICAL RECEPTACLE, GANG BOX AND CONDUIT SHOWN FOR REFERENCE ONLY (REFER TO DIV 26).

1 / T402 TYPICAL ABOVE CEILING SINGLE DATA OUTLET
NOT TO SCALE

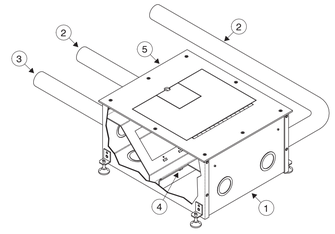

KEYED NOTES:

1. FSR FL-500P-4-B IN-SLAB 4" DEEP FLOOR BOX. CONFIGURE BOX DIVIDER TO SEPARATE HIGH VOLTAGE AND LOW VOLTAGE. USE FSR FL-GRD4 AS REQUIRED FOR ON GRADE APPLICATIONS. INSTALL TEMPORARY COVER BASED ON FLOOR FINISH INSTALLATION TYPE, SHIM AS REQUIRED, REFER TO MANUFACTURER INSTRUCTIONS. SUPPLIED BY DIVISION 27 AND INSTALLED BY DIVISION 26.
2. 1-1/4" INCH EMT CONDUIT WITH 200LB PULL STRING AND NYLON BUSHING STUBBED OUT ABOVE ACCESSIBLE CEILING IN THE SAME ROOM WHERE THE DEVICE IS LOCATED UNLESS OTHERWISE NOTED. (BY DIVISION 26).
3. ELECTRICAL POWER PROVIDED AND INSTALLED BY DIVISION 26. PROVIDE DUPLEX ELECTRICAL OUTLET AND COVER PLATE. FINISH COLOR WHITE UNLESS OTHERWISE SPECIFIED WITH THE ARCHITECT. REFER TO DRAWINGS, SCHEDULES AND SPECIFICATIONS FOR POWER REQUIREMENTS.
4. MULTIMEDIA PLATES, REFER TO FACEPLATE DETAIL DRAWINGS. PROVIDE MOUNTING HARDWARE AS REQUIRED. REFER TO DRAWINGS, SCHEDULES, AND SPECIFICATIONS FOR ADDITIONAL INFORMATION (BY DIVISION 27).
5. FSR COVER PLATE FL-500P-BLK-C UNLESS OTHERWISE SPECIFIED. COORDINATE FINISH WITH ARCHITECT. (BY DIVISION 27)

2 / T402 TYPICAL ABOVE CEILING SINGLE DATA OUTLET
NOT TO SCALE

TEXAS PARKS & WILDLIFE

FORD POWELL &CARSON
Architects & Planners, Inc.
Architecture
Planning
Preservation
Interior Design
1138 East Commerce Street
San Antonio, Texas 78205
210/226-1246
FPC# 92705

REGISTERED COMMUNICATIONS DISTRIBUTION DESIGNER
Bicsi
BRIAN K COMBS
BICSI ID# 118077
EXPIRES 12-31-21
RCDD
07-03-2020

COMBS Consulting Group
technology & security
SAN ANTONIO
8200 IH-10 West, Ste. 103
San Antonio, Texas 78230
Phone : 210-698-7887
AUSTIN
4425 S. Mopac, Bldg. 4, Ste. 800
Austin, Texas 78735

TYLER STATE PARK
HEADQUARTERS REPLACEMENT PHASE 1
PROJECT NUMBER: 112741

DATE: 07/03/2020
DESIGNED BY: Designer
DRAWN BY: Author
REVIEWED BY: Checker

no.	revision	date

SHEET TITLE
TECHNOLOGY TYPICAL DETAILS

SHEET NUMBER
T402

CONSTRUCTION DOCUMENTS

DATE: 7/2/2020 8:02:14 AM PATH: G:\Projects - San Antonio - Active\Tyler Texas State Park\3 - Drawings\1 - Current Drawings\92705-Tyler SP Bldg_TECH_v2019.rvt

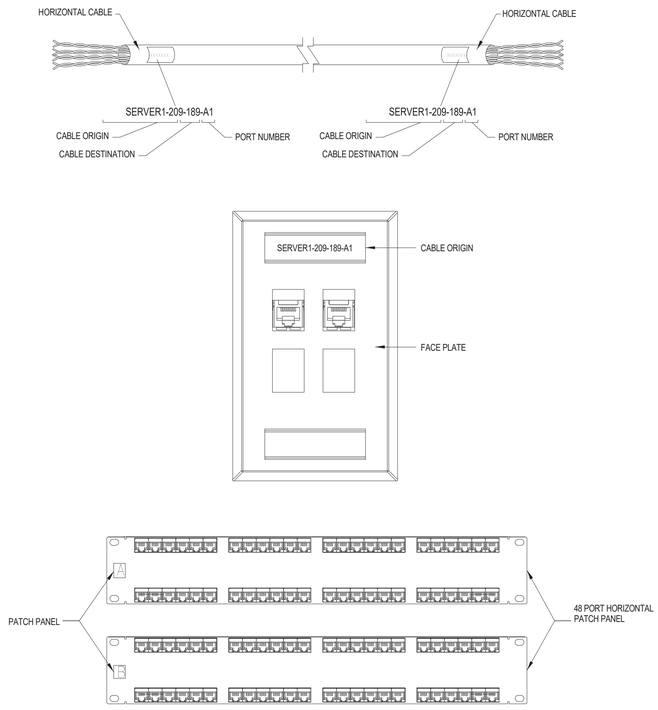

1 T501 TYPICAL HORIZONTAL DATA CABLE LABELING SCHEME
NOT TO SCALE

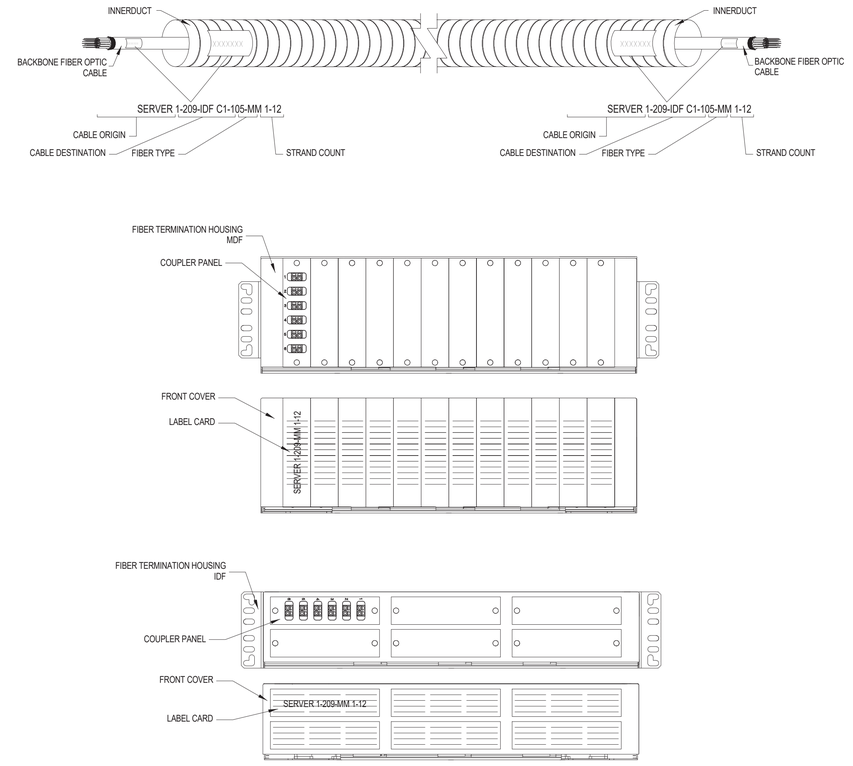

2 T501-2_TYPICAL FIBER BACKBONE LABELING SCHEME
NOT TO SCALE

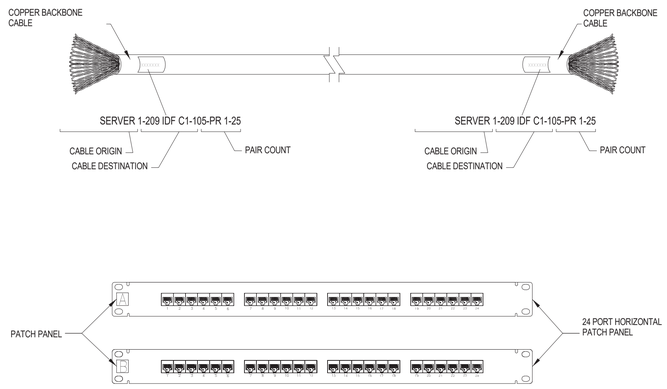

3 T501 TYPICAL COPPER BACKBONE LABELING SCHEME
NOT TO SCALE

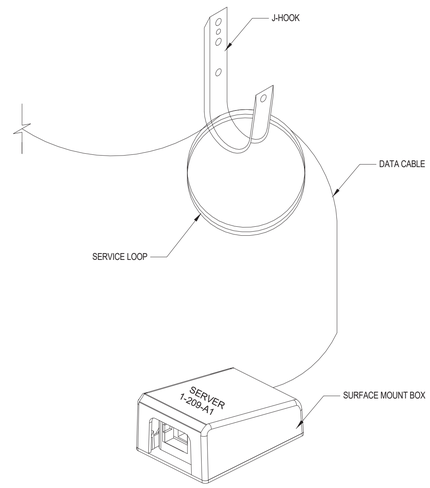

4 T501 ABOVE ACCESSIBLE CEILING LABELING SCHEME
NOT TO SCALE

TEXAS PARKS & WILDLIFE

FORD POWELL &CARSON
Architects & Planners, Inc.
Architecture
Planning
Preservation
Interior Design
1138 East Commerce Street
San Antonio, Texas 78205
210/226-1246
FPC# 92705

REGISTERED COMMUNICATIONS DISTRIBUTION DESIGNER
Bicsi
BRIAN K COMBS
BICSI ID# 118077
EXPIRES 12-31-21
RCDD
07-03-2020

COMBS Consulting Group
technology & security
SAN ANTONIO
8200 IH-10 West, Ste. 103
San Antonio, Texas 78230
Phone : 210-698-7887
AUSTIN
4425 S. Mopac, Bldg. 4, Ste. 800
Austin, Texas 78735

TYLER STATE PARK
HEADQUARTERS REPLACEMENT PHASE 1
PROJECT NUMBER: 112741

DATE: 07/03/2020
DESIGNED BY: DR
DRAWN BY: PM
REVIEWED BY: DR
no. revision date

SHEET TITLE
TECHNOLOGY TYPICAL LABELING SCHEME

SHEET NUMBER
T501

CONSTRUCTION DOCUMENTS

PATH: G:\Projects - San Antonio - Active\Tyler Texas State Park\3 - Drawings\1 - Current Drawings\92705-Tyler SP Bldg_TECH_v2019.rvt
DATE: 7/2/2020 8:02:15 AM

SECURITY SYMBOLS & LEGEND

ACCESS CONTROL SYMBOLS

AD	INTERFACE TO AUTOMATIC DOOR CONTROL AND MONITORING.
BI	INTERFACE TO RETRACTABLE VEHICLE BOLLARD.
BR	BIOMETRIC READER.
CH	DOOR BELL CHIME.
CR	CARD READER.
CR1	CARD READER MULLION MOUNT.
CR2	ELEVATOR CARD READER.
CR3	CARD READER/INTERCOM UNIT.
CR4	CARD READER/INTERCOM PEDESTRIAN PEDESTAL.
D	DURESS BUTTON MOUNTED IN KNEE SPACE OF DESK, TABLE OR COUNTER PROVIDE ARMORED CABLE FROM DURESS BUTTON TO JUNCTION BOX.
D	WALL MOUNTED DURESS BUTTON.
DB	DOOR BELL.
DC	DOOR CONTACT.
DC1	OVERHEAD DOOR CONTACT. PROVIDE ARMORED CABLE FROM SWITCH TO JUNCTION BOX.
DMA	DOOR MANAGEMENT ANNUNCIATOR.
DR	SINGLE DOOR RELEASE PUSHBUTTON UNDER COUNTER. ARMORED CABLE FROM PUSHBUTTON TO JUNCTION BOX.
EL	INTERFACE TO ELEVATOR CONTROL/MONITORING.
FA	INTERFACE TO FIRE ALARM SYSTEM.
GC	INTERFACE TO PARKING GATE CONTROL/MONITORING.
IC	AUDIO INTERCOM SUBSTATION.
IM	INTERCOM MASTER STATION AS INDICATED BLOCK DIAGRAM AND/OR DETAILS.
KS	KEYSWITCH.
LD	LOCKDOWN BUTTON UNDER COUNTER. ARMORED CABLE FROM LOCKDOWN BUTTON TO JUNCTION BOX.
LD	LOCKDOWN BUTTON.
OD	INTERFACE TO OVERHEAD DOOR CONTROL/MONITORING.
RD	INTERFACE TO MOTORIZED REVOLVING DOOR CONTROL/MONITORING.
REX	REQUEST-TO-EXIT IS INTEGRAL WITH ELECTRIFIED LOCKING HARDWARE. PROVIDED AND INSTALLED BY OTHERS.
RX	REQUEST-TO-EXIT MOTION SENSOR MOUNTED CEILING-MOUNTED.
RX	REQUEST-TO-EXIT MOTION SENSOR DOOR FRAME-MOUNTED.
SD	INTERFACE TO SLIDING DOOR CONTROL/MONITORING.
SR	SECURITY SYSTEM RISER, DATA GATHERING PANEL AND LOW VOLTAGE POWER SUPPLY DISTRIBUTION LOCATION.
VI	VIDEO INTERCOM SUBSTATION.
VM	DESKTOP VIDEO INTERCOM MASTER STATION.
WD	WIRELESS DURESS BUTTON MOUNTED IN KNEE SPACE OF DESK, TABLE, OR COUNTER.
ES	HES 9600 with 2005M3: SMART Pac III HES 1006 with 2005M3: SMART Pac III

ACCESS CONTROL SYMBOLS

WDRR	WIRELESS DOOR RELEASE RECEIVER DEVICE.
WDRT	WIRELESS DOOR RELEASE TRANSMITTER DEVICE.
WR	WIRELESS DURESS BUTTON RECEIVER DEVICE.
WT	WIRELESS DURESS BUTTON TRANSMITTER DEVICE.
	PRE-WIRE AND BLANK COVER PLATE FOR FUTURE DEVICE.

ELECTRONIC SURVEILLANCE SYMBOLS

	FIXED SURVEILLANCE CAMERA, CAMERA MODEL AND MOUNTING HEIGHT AS SPECIFIED.
	CEILING-MOUNTED FIXED SURVEILLANCE CAMERA, CAMERA MODEL AND MOUNTING HEIGHT AS SPECIFIED.
	180° SURVEILLANCE CAMERA, CAMERA MODEL AND MOUNTING HEIGHT AS SPECIFIED.
	CEILING-MOUNTED 180° SURVEILLANCE CAMERA, CAMERA MODEL AND MOUNTING HEIGHT AS SPECIFIED.
	360° SURVEILLANCE CAMERA, CAMERA MODEL AND MOUNTING HEIGHT AS SPECIFIED.
	CEILING-MOUNTED 360° SURVEILLANCE CAMERA, CAMERA MODEL AND MOUNTING HEIGHT AS SPECIFIED.
	PAN, TILT & ZOOM SURVEILLANCE CAMERA, CAMERA MODEL AND MOUNTING HEIGHT AS SPECIFIED.
CLG	CEILING-MOUNTED PAN, TILT & ZOOM SURVEILLANCE CAMERA, CAMERA MODEL AND MOUNTING HEIGHT AS SPECIFIED.

GENERAL SYMBOLS

# SHEET — DRAWING TITLE — SCALE: SCALE	DRAWING TITLE CALLOUT, # = DETAIL NUMBER.
# SHEET	DETAIL CALLOUT, # = DETAIL NUMBER.
# SHEET	SECTION CALLOUT, # = DETAIL NUMBER.
SHEET #	ELEVATION CALLOUT, # = DETAIL NUMBER.
#	KEYED NOTE, # = KEYED NOTE NUMBER.
#	REVISION TRIANGLE, # = REVISION NUMBER (PER SHEET).
TR (IDF XXX)	INDICATES TELECOMMUNICATIONS REGION

INTRUSION DETECTION SYMBOLS

AL	ALARM ANNUNCIATOR LIGHT.
AP	ANNUNCIATOR PANEL AS INDICATED IN BLOCK DIAGRAMS AND/OR DETAILS.
AV	AUDIO VISUAL ANNUNCIATOR.
FA	INTERFACE TO FREEZER/TEMPERATURE ALARM. PROVIDED AND INSTALLED BY OTHERS.
FC	FUTURE CABLE AS SPECIFIED.
GB	CEILING-MOUNTED GLASS BREAK SENSOR.
GB	GLASS BREAK SENSOR.
KP	PERSONAL IDENTIFICATION NUMBER KEYPAD.
M	SOUND DETECTION MICROPHONE.
MD	360° MOTION DETECTOR MOUNTED TO CEILING.
MD	MOTION DETECTOR.
MD LR	LONG RANGE MOTION DETECTOR.
RA	INTERFACE TO REFRIGERATOR/TEMPERATURE ALARM. PROVIDED AND INSTALLED BY OTHERS.
ST	STROBE LIGHT SURFACE MOUNTED TO CEILING.
ST	STROBE LIGHT.
V	VIBRATION DETECTOR.

MISCELLANEOUS SECURITY SYMBOLS

B	ALERTUS BEACON MOUNTED AT 60" A.F.F. UNLESS OTHERWISE NOTED
EP	EMERGENCY PHONE.
LS	FLOOR MOUNTED LIQUID SENSOR. PROVIDE ARMORED CABLE FROM SENSOR TO JUNCTION BOX.
S	INTERCOM SPEAKER FLUSH MOUNTED IN CEILING.
	ALERTUS LED MARQUEE (SINGLE SIDED)
	ALERTUS LED MARQUEE (DOUBLE SIDED)

ABBREVIATIONS

A.F.F.	ABOVE FINISHED FLOOR
A.F.G.	ABOVE FINISHED GRADE
AER	AERIAL
B	BURIED
CAT.3/5	CATEGORY 3/5
CATV	COMMUNITY ANTENNA TELEVISION
CCTV	CLOSED CIRCUIT TELEVISION
CLT	CLOSET
CO	CENTRAL OFFICE
DEMARC	DEMARCATION POINT
DPDT	DOUBLE PULL DOUBLE THROW
EMT	ELECTRIC METALLIC TUBE
F.O.C.	FIBER OPTIC CABLE
GIP	GALVANIZED IRON PIPE
HE	PA/INTERCOM HEAD-END
IRC	INTERMEDIATE RIGID CONDUIT
ISP	INSIDE CABLE PLANT
IDF	INTERMEDIATE DISTRIBUTION FRAME
MDF	MAIN DISTRIBUTION FRAME
MH	MANHOLE
MM	MULTIMODE
OSP	OUTSIDE CABLE PLANT
PB	PULLBOX
PR	PAIR
PBX	PRIVATE BRANCH EXCHANGE
PVC	POLYVINYL CHLORIDE
SM	SINGLE MODE
SP	SERVICE PROVIDER
STP	SHIELDED TWISTED PAIR
TB	TERMINAL BLOCK
UTP	UNSHIELDED TWISTED PAIR

NOTES

1. CONTRACTOR SHALL REVIEW DRAWINGS AND SPECIFICATIONS THAT MAKE UP THE CONTRACT DOCUMENTS AND COMPLETE ALL WORK INCLUDED THEREIN.
2. SCALE OF SECURITY DRAWINGS IS PROVIDED FOR REFERENCE ONLY. CONTRACTOR SHALL BE RESPONSIBLE FOR PROPER CABLE LENGTHS, SIZE OF PATHWAYS, DIMENSIONS, ETC.
3. SECURITY DRAWINGS SHALL BE USED TO COMPLEMENT THE WRITTEN SPECIFICATIONS.
4. ANY DISCREPANCY OR CONFLICT WITHIN OR BETWEEN THE DRAWINGS AND SPECIFICATIONS SHALL BE BROUGHT TO THE ATTENTION OF THE ARCHITECT/ENGINEER. DISCREPANCIES OR CONFLICTS NOT BROUGHT TO THE ATTENTION OF THE ARCHITECT/ENGINEER AND SUBSEQUENTLY CLARIFIED DURING THE BIDDING OF THE PROJECT WILL BE DEEMED TO HAVE BEEN BID OR PROPOSED IN THE MORE COSTLY OR DIFFICULT MANNER, AND THE BETTER QUALITY OR GREATER QUANTITY OF WORK SHALL BE PROVIDED BY THE CONTRACTOR IN ACCORDANCE WITH THE ARCHITECT'S/ENGINEER'S INTERPRETATION.
5. ANY REFERENCE TO OR INDICATION OF DOOR HARDWARE IS SHOWN FOR REFERENCE ONLY. COORDINATE WITH THE DIVISION 8 ENGINEER/CONSULTANT FOR DOOR HARDWARE CLARIFICATION OR INFORMATION (BY DIV. 8).

INDEX OF DRAWINGS

TS000	SECURITY SYMBOLS & LEGEND
TS101	SECURITY SITE PLAN
TS201	SECURITY OVERALL FLOOR PLANS
TS401	SECURITY TYPICAL DETAILS
TS402	SECURITY TYPICAL DETAILS
TS403	SECURITY TYPICAL DETAILS
TS501	SECURITY SCHEDULES

TEXAS PARKS & WILDLIFE

FORD POWELL & CARSON Architects & Planners, Inc.
Architecture
Planning
Preservation
Interior Design
1138 East Commerce Street
San Antonio, Texas 78205
210/226-1246
FPC# 92705

REGISTERED COMMUNICATIONS DISTRIBUTION DESIGNER
BICSI
BRIAN K COMBS
BICSI ID# 118077
EXPIRES 12-31-21
RCDD
07-03-2020

COMBS Consulting Group
technology & security
SAN ANTONIO
5000 Bradford Dr., Bldg. 4, Ste. 400
San Antonio, Texas 78233
Phone : 210-998-7887
AUSTIN
4407 Bee Cave Rd., Ste. 109
Austin, Texas 78735

TYLER STATE PARK
HEADQUARTERS REPLACEMENT PHASE 1
PROJECT NUMBER: 112741

DATE: 07/03/2020
DESIGNED BY: RN
DRAWN BY: PM
REVIEWED BY: RN

no.	revision	date

SHEET TITLE
SECURITY SYMBOLS & LEGEND

SHEET NUMBER
TS000

CONSTRUCTION DOCUMENTS

PATH: G:\Projects - San Antonio - Active\Tyler Texas State Park\3 - Drawings\1 - Current Drawings\Set Drawings\92705-Tyler SP Bldg_TECH_v2019.rvt
DATE: 7/2/2020 8:02:15 AM



1 TS101 SECURITY SITE PLAN
1" = 30'-0"

SECURITY GENERAL NOTES

1. ALL CONDUIT PATHWAYS, ROUGH-INS, CONDUIT SLEEVES, ETC. ARE TO BE INSTALLED WITH IN LOCAL AND NATIONAL ELECTRICAL STANDARDS.
2. THE SECURITY CONTRACTOR SHALL RESTORE ALL PENETRATIONS PROVIDED THROUGH FIRE RATED WALLS/STRUCTURES FOR DATA AND SECURITY CABLING BACK TO THE ORIGINAL RATING.
3. CABLING FOR SECURITY SHALL BE ROUTED IN SEPARATE PATHWAYS IN J-HOOKS, CONDUITS, CONDUIT SLEEVES, CORES, ETC. THROUGHOUT THE ENTIRE PATHWAY. DIFFERENT MEDIA TYPES (DATA, VOICE, SECURITY, ETC.) SHALL NOT SHARE THE SAME J-HOOK, CONDUIT, CONDUIT SLEEVE, CORE, ETC.
4. ALL CONDUITS FOR SECURITY DEVICES SHALL ROUTE FROM THE DEVICE LOCATION AND TERMINATE ABOVE AN ACCESSIBLE CEILING IN THE SAME ROOM/AREA WHERE THE DEVICE IS LOCATED. IF THE ROOM/AREA WHERE THE DEVICE IS LOCATED DOES NOT HAVE AN ACCESSIBLE CEILING, THE CONDUIT SHALL ROUTE TO THE NEAREST ACCESSIBLE CEILING OFF OF THE CORRIDOR. CONDUIT PATHWAY SHALL TAKE THE SHORTEST ROUTE TO THE APPLICABLE DATA ROOM TO MINIMIZE THE CABLE LENGTH.
5. CONDUIT SEGMENTS SHALL BE NO MORE THAN 100-FEET IN LENGTH WITH NO MORE THAN THE EQUIVALENT OF (2) 90 DEGREE BENDS BETWEEN PULLING POINTS.
6. CONDUITS SHALL MAINTAIN A BEND RADIUS OF 6 TIMES THE DIAMETER OF THE CONDUIT FOR CONDUITS 2-INCHES OR SMALLER AND 10 TIMES THE DIAMETER OF THE CONDUIT FOR CONDUITS GREATER THAN 2-INCHES.
7. ALL CONDUITS SHALL HAVE A PULL STRING INSTALLED FOR PULLING OF CABLE. CLEARLY LABEL AS "PULL STRING" INDICATING OPPOSITE END LOCATION.
8. ALL SPARE CONDUITS OR CONDUITS FILLED WITH LESS THAN THE MAXIMUM ALLOWED FILL RATIO SHALL HAVE A PULL STRING INSTALLED.
9. THE SECURITY CONTRACTOR IS RESPONSIBLE FOR PROVIDING, INSTALLING AND TERMINATING ANY ELECTRONIC LOCKING HARDWARE SHOWN AND NOTED IN THE CONSTRUCTION DOCUMENTS . THE SECURITY CONTRACTOR IS ALSO RESPONSIBLE FOR PROVIDING, INSTALLING AND TERMINATING ANY CONTROL AND POWER CABLING ONTO THE LOCKING DEVICE.

SECURITY KEYED NOTES

1. SECURITY CONTRACTOR TO CONFIRM SITE CONDITIONS FOR THE MOUNTING OF DEVICES
2. 2 INCH SLEEVE BETWEEN MAIN BUILDING AND GUARDHOUSE PROVIDED BY ELEC, CONTRACTOR FOR SECURITY COMMUNICATIONS
3. LICENSE PLATE CAPTURE CAMERA
4. POWERED FIBER CABLE SYSTEM
5. POLE MOUNTED DEVICES, POLE PROVIDED AND INSTALLED BY OWNER

TEXAS PARKS & WILDLIFE

FORD POWELL &CARSON
Architects & Planners, Inc.
Architecture
Planning
Preservation
Interior Design
1138 East Commerce Street
San Antonio, Texas 78205
210/226-1246
FPC# 92705

REGISTERED COMMUNICATIONS DISTRIBUTION DESIGNER
Bicsi
BRIAN K COMBS
BICSI ID# 118077
EXPIRES 12-31-21
RCDD
07-03-2020

COMBS Consulting Group
technology & security
SAN ANTONIO
8200 IH-10 West, Ste. 103
San Antonio, Texas 78230
Phone : 210-698-7887
AUSTIN
4425 S. Mopac, Bldg. 4, Ste. 800
Austin, Texas 78735

TYLER STATE PARK
HEADQUARTERS REPLACEMENT PHASE 1
PROJECT NUMBER: 112741

DATE: 07/03/2020
DESIGNED BY: RN
DRAWN BY: PM
REVIEWED BY: RN

no.	revision	date

SHEET TITLE
SECURITY SITE PLAN

SHEET NUMBER
TS101

CONSTRUCTION DOCUMENTS

PATH: G:\Projects - San Antonio - Active\Tyler Texas State Park\3 - Drawings\1 - Current Drawings\92705-Tyler SP Bldg_TECH_v2019.rvt
DATE: 7/2/2020 8:02:18 AM

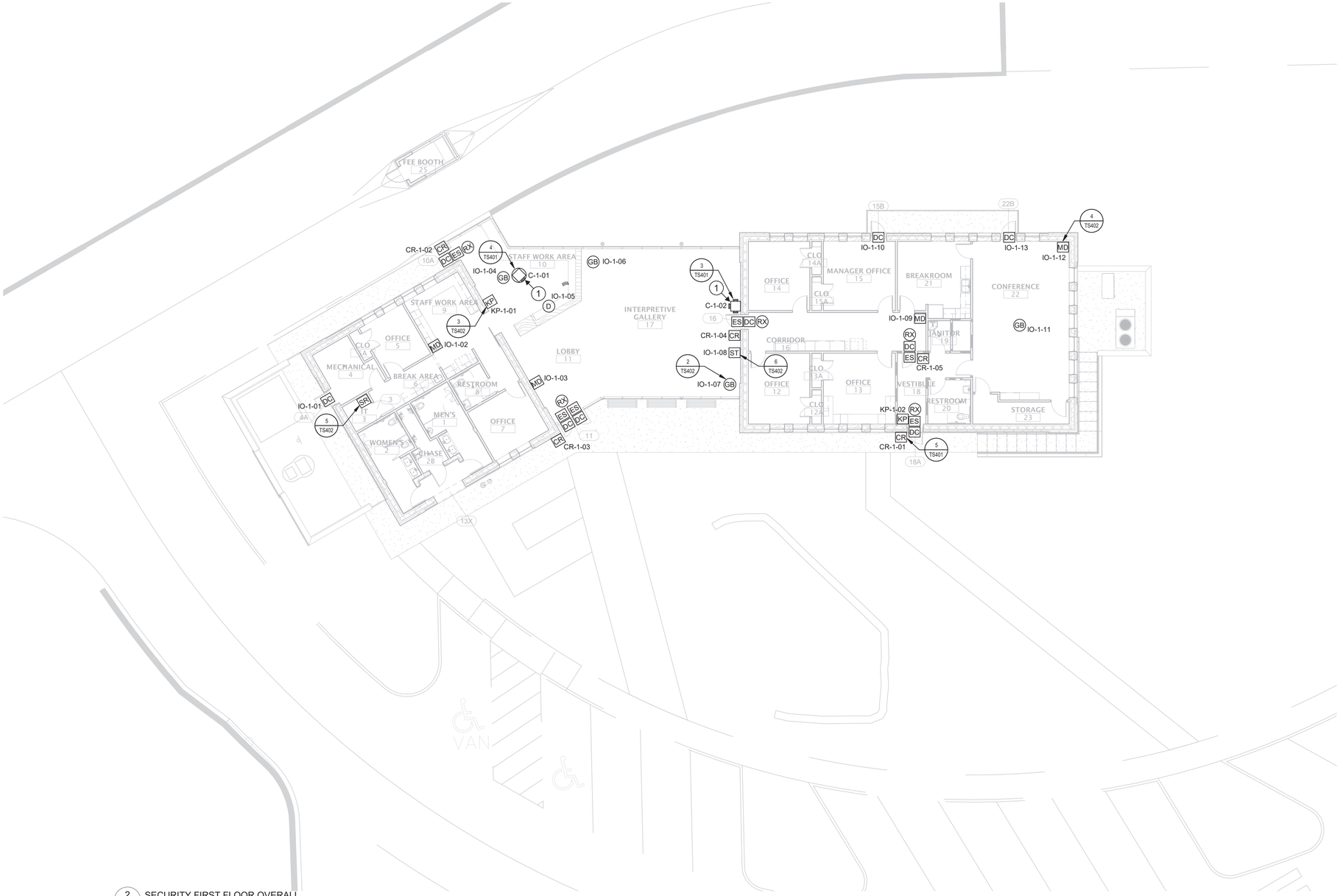

2 TS201 SECURITY FIRST FLOOR OVERALL
3/32" = 1'-0"

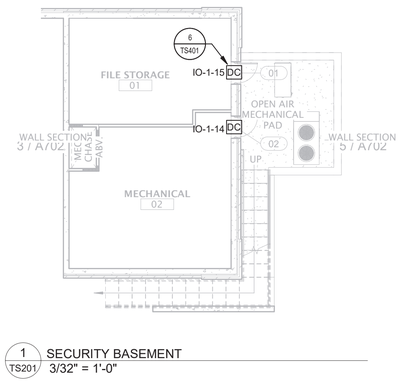

1 TS201 SECURITY BASEMENT
3/32" = 1'-0"

SECURITY GENERAL NOTES

1. ALL CONDUIT PATHWAYS, ROUGH-INS, CONDUIT SLEEVES, ETC. ARE TO BE INSTALLED WITH IN LOCAL AND NATIONAL ELECTRICAL STANDARDS.
2. THE SECURITY CONTRACTOR SHALL RESTORE ALL PENETRATIONS PROVIDED THROUGH FIRE RATED WALLS/STRUCTURES FOR DATA AND SECURITY CABLING BACK TO THE ORIGINAL RATING.
3. CABLING FOR SECURITY SHALL BE ROUTED IN SEPARATE PATHWAYS IN J-HOOKS, CONDUITS, CONDUIT SLEEVES, CORES, ETC. THROUGHOUT THE ENTIRE PATHWAY. DIFFERENT MEDIA TYPES (DATA, VOICE, SECURITY, ETC.) SHALL NOT SHARE THE SAME J-HOOK, CONDUIT, CONDUIT SLEEVE, CORE, ETC.
4. ALL CONDUITS FOR SECURITY DEVICES SHALL ROUTE FROM THE DEVICE LOCATION AND TERMINATE ABOVE AN ACCESSIBLE CEILING IN THE SAME ROOM/AREA WHERE THE DEVICE IS LOCATED. IF THE ROOM/AREA WHERE THE DEVICE IS LOCATED DOES NOT HAVE AN ACCESSIBLE CEILING, THE CONDUIT SHALL ROUTE TO THE NEAREST ACCESSIBLE CEILING OFF OF THE CORRIDOR. CONDUIT PATHWAY SHALL TAKE THE SHORTEST ROUTE TO THE APPLICABLE DATA ROOM TO MINIMIZE THE CABLE LENGTH.
5. CONDUIT SEGMENTS SHALL BE NO MORE THAN 100-FEET IN LENGTH WITH NO MORE THAN THE EQUIVALENT OF (2) 90 DEGREE BENDS BETWEEN PULLING POINTS.
6. CONDUITS SHALL MAINTAIN A BEND RADIUS OF 6 TIMES THE DIAMETER OF THE CONDUIT FOR CONDUITS 2-INCHES OR SMALLER AND 10 TIMES THE DIAMETER OF THE CONDUIT FOR CONDUITS GREATER THAN 2-INCHES.
7. ALL CONDUITS SHALL HAVE A PULL STRING INSTALLED FOR PULLING OF CABLE. CLEARLY LABEL AS "PULL STRING" INDICATING OPPOSITE END LOCATION.
8. ALL SPARE CONDUITS OR CONDUITS FILLED WITH LESS THAN THE MAXIMUM ALLOWED FILL RATIO SHALL HAVE A PULL STRING INSTALLED.
9. THE SECURITY CONTRACTOR IS RESPONSIBLE FOR PROVIDING, INSTALLING AND TERMINATING ANY ELECTRONIC LOCKING HARDWARE SHOWN AND NOTED IN THE CONSTRUCTION DOCUMENTS. THE SECURITY CONTRACTOR IS ALSO RESPONSIBLE FOR PROVIDING, INSTALLING AND TERMINATING ANY CONTROL AND POWER CABLING ONTO THE LOCKING DEVICE.

SECURITY KEYED NOTES

1. SECURITY CONTRACTOR TO CONFIRM SITE CONDITIONS FOR THE MOUNTING OF DEVICES
2. 2 INCH SLEEVE BETWEEN MAIN BUILDING AND GUARDHOUSE PROVIDED BY ELEC, CONTRACTOR FOR SECURITY COMMUNICATIONS
3. LICENSE PLATE CAPTURE CAMERA
4. POWERED FIBER CABLE SYSTEM
5. POLE MOUNTED DEVICES, POLE PROVIDED AND INSTALLED BY OWNER

TEXAS PARKS & WILDLIFE

FORD POWELL & CARSON
Architects & Planners, Inc.
Architecture
Planning
Preservation
Interior Design
1138 East Commerce Street
San Antonio, Texas 78205
210/226-1246
FPC# 92705

REGISTERED COMMUNICATIONS DISTRIBUTION DESIGNER
BICSI
BRIAN K COMBS
BICSI ID# 118077
EXPIRES 12-31-21
* RCDD *
07-03-2020

COMBS Consulting Group
technology & security
SAN ANTONIO
8200 IH-10 West, Bldg. 4, Ste. 800
San Antonio, Texas 78230
Phone : 210-998-7887
AUSTIN
4646 Bull Creek Rd., Ste. 103
Austin, Texas 78731

TYLER STATE PARK
HEADQUARTERS REPLACEMENT PHASE 1
PROJECT NUMBER: 112741

DATE: 07/03/2020
DESIGNED BY: RN
DRAWN BY: PM
REVIEWED BY: RN

no.	revision	date

SHEET TITLE
SECURITY
OVERALL FLOOR
PLANS

SHEET NUMBER
TS201

CONSTRUCTION DOCUMENTS

DATE: 7/2/2020 8:02:19 AM PATH: G:\Projects - San Antonio - Active\Tyler Texas State Park\3 - Drawings\1 - Current Drawings\92705-Tyler_SP_Bldg_TECH_v2019.rvt

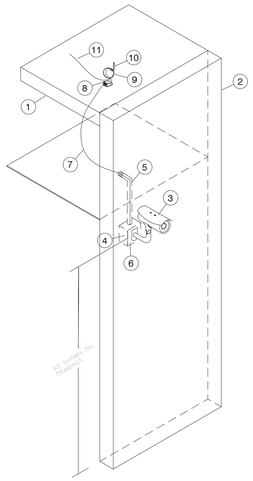

KEYED NOTES:

1. CEILING DECK AS SCHEDULED.
2. INTERIOR WALL AS SCHEDULED.
3. INTERIOR WALL MOUNTED IP VIDEO SURVEILLANCE DOME CAMERA (REFERENCE SPECIFICATION).
4. 4 11/16-INCH x 4 11/16-INCH x 2 1/8-INCH RECESSED DOUBLE GANG BOX (BY DIV 26).
5. 3/4-INCH EMT CONDUIT FROM DOUBLE GANG BOX WITH 200 LBS PULL STRING AND NYLON BUSHING STUBBED OUT ABOVE ACCESSIBLE CEILING (BY DIV 26).
6. DOUBLE GANG PLASTER RING (BY DIV 26).
7. PATCH CORD AS SPECIFIED.
8. SURFACE MOUNT BOX ABOVE ACCESSIBLE CEILING (BY DIV 27).
9. 20 FOOT SERVICE LOOP ABOVE ACCESSIBLE CEILING NEATLY COILED AND SECURED TO J-HOOK (BY DIV 27).
10. J-HOOK ABOVE ACCESSIBLE CEILING (BY DIV 27).
11. DATA CABLE ABOVE ACCESSIBLE CEILING (BY DIV 27).

1 TS401 TYPICAL INTERIOR FIXED WALL MOUNTED SURVEILLANCE CAMERA
NOT TO SCALE

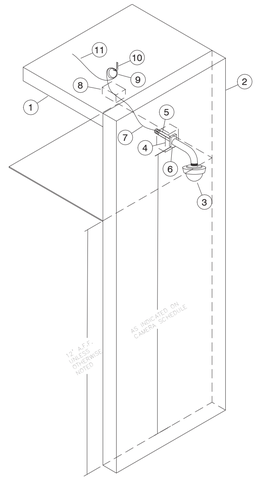

KEYED NOTES:

1. CEILING DECK AS SCHEDULED.
2. EXTERIOR WALL AS SCHEDULED.
3. EXTERIOR WALL MOUNTED IP VIDEO SURVEILLANCE HD DOME CAMERA (REFERENCE SPECIFICATION).
4. 4 11/16-INCH x 4 11/16-INCH x 2 1/8-INCH RECESSED DOUBLE GANG BOX (BY DIV 26).
5. 3/4-INCH EMT CONDUIT FROM DOUBLE GANG BOX WITH 200 LBS PULL STRING AND NYLON BUSHING STUBBED OUT ABOVE ACCESSIBLE CEILING (BY DIV 26).
6. WEATHERTIGHT GASKET FOR WEATHERPROOF BACKBOX (BY DIV 26).
7. PATCH CORD AS SPECIFIED.
8. SURFACE MOUNT BOX ABOVE ACCESSIBLE CEILING (BY DIV 27).
9. 20 FOOT SERVICE LOOP ABOVE ACCESSIBLE CEILING NEATLY COILED AND SECURED TO J-HOOK (BY DIV 27).
10. J-HOOK ABOVE ACCESSIBLE CEILING (BY DIV 27).
11. DATA CABLE ABOVE ACCESSIBLE CEILING (BY DIV 27).

2 TS401 TYPICAL EXTERIOR FIXED WALL MOUNTED SURVEILLANCE CAMERA
NOT TO SCALE

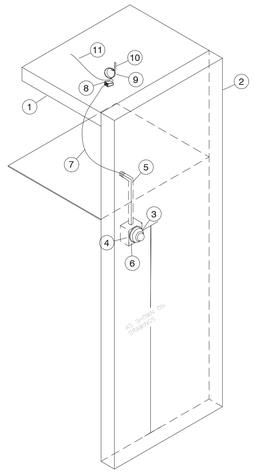

KEYED NOTES:

1. CEILING DECK AS SCHEDULED.
2. INTERIOR WALL AS SCHEDULED.
3. INTERIOR WALL MOUNTED IP VIDEO SURVEILLANCE DOME CAMERA (REFERENCE SPECIFICATION).
4. 4 11/16-INCH x 4 11/16-INCH x 2 1/8-INCH RECESSED DOUBLE GANG BOX (BY DIV 26).
5. 3/4-INCH EMT CONDUIT FROM DOUBLE GANG BOX WITH 200 LBS PULL STRING AND NYLON BUSHING STUBBED OUT ABOVE ACCESSIBLE CEILING (BY DIV 26).
6. DOUBLE GANG PLASTER RING (BY DIV 26).
7. PATCH CORD AS SPECIFIED.
8. SURFACE MOUNT BOX ABOVE ACCESSIBLE CEILING (BY DIV 27).
9. 20 FOOT SERVICE LOOP ABOVE ACCESSIBLE CEILING NEATLY COILED AND SECURED TO J-HOOK (BY DIV 27).
10. J-HOOK ABOVE ACCESSIBLE CEILING (BY DIV 27).
11. DATA CABLE ABOVE ACCESSIBLE CEILING (BY DIV 27).

3 TS401 TYPICAL INTERIOR WALL MOUNTED SURVEILLANCE CAMERA
NOT TO SCALE

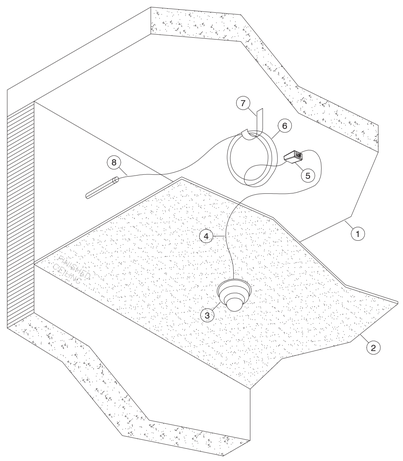

KEYED NOTES:

1. CEILING DECK AS SCHEDULED.
2. LAY-IN CEILING AS SCHEDULED.
3. CEILING MOUNTED INTERIOR IP VIDEO SURVEILLANCE DOME CAMERA (REFERENCE DIV 28 SPECIFICATIONS FOR EXACT MODEL).
4. PATCH CORD (BY DIV 27).
5. SURFACE MOUNT DATA OUTLET ABOVE ACCESSIBLE CEILING (BY DIV 27).
6. 20 FOOT SERVICE LOOP ABOVE ACCESIBLE CEILING NEATLY COILED AND SECURED TO J-HOOK (BY DIV 27).
7. J-HOOK ABOVE ACCESSIBLE CEILING (BY DIV 27).
8. DATA CABLE ABOVE ACCESSIBLE CEILING (BY DIV 27).

4 TS401 TYPICAL INTERIOR CEILING MOUNTED SURVEILLANCE CAMERA
NOT TO SCALE

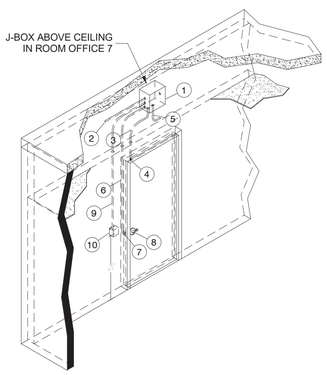

KEYED NOTES:

1. (1) 12-INCH WIDE X 12-INCH HIGH X 8-INCH DEEP JUNCTION BOX MOUNTED ABOVE ACCESSIBLE CEILING ON SECURE SIDE OF DOOR (BY DIV 26).
2. (1) 1-INCH EMT CONDUIT FROM 12-INCH WIDE X 12-INCH HIGH X 8-INCH DEEP JUNCTION BOX TO ABOVE ACCESSIBLE CEILING ON SECURE SIDE OF DOOR FOR ACCESS CONTROL CABLE (BY DIV 26).
3. (1) 1/2-INCH EMT CONDUIT FROM 12-INCH WIDE X 12-INCH HIGH X 8-INCH DEEP JUNCTION BOX TO HEAD OF DOOR FRAME FOR CONCEALED DOOR POSITION SWITCH. STUB CONDUIT INTO HEAD OF DOOR FRAME 6-INCHES FROM THE STRIKE SIDE OF THE DOOR. PROVIDE A 3-INCH BLOCKOUT FOR GROUTED DOORS (BY DIV 26).
4. CONCEALED DOOR POSITION SWITCH (BY DIV 28).
5. (1) 1/2-INCH EMT CONDUIT FROM 12-INCH WIDE X 12-INCH HIGH X 12-INCH DEEP JUNCTION BOX TO ACCESSIBLE CEILING ABOVE ON SECURE SIDE OF DOOR FOR REQUEST TO EXIT MOTION SENSOR (BY DIV 26).
6. (1) 3/4-INCH EMT CONDUIT FROM 12-INCH WIDE X 12-INCH HIGH X 8-INCH DEEP JUNCTION BOX DOWN DOOR FRAME FOR ELECTRIC STRIKE (BY DIV 26).
7. (1) ELECTRIFIED STRIKE ON SECURE SIDE OF DOOR (BY DIV 28).
8. (1) MECHANICAL LEVERSET ON SECURE SIDE OF DOOR (BY DIV 8).
9. (1) 3/4-INCH EMT CONDUIT FROM 12-INCH WIDE X 12-INCH HIGH X 8-INCH DEEP JUNCTION BOX TO A RECESSED DOUBLE GANG BOX WITH A SINGLE GANG PLASTER RING FOR CARD READER ON UNSECURE SIDE OF DOOR (BY DIV 26).
10. (1) CARD READER ON UNSECURE SIDE OF DOOR (BY DIV 28).

5 TS401 WALL MOUNTED CARD READER WITH SINGLE ELECTRIFIED STRIKE AND CEILING MOUTNED REQUEST TO EXIT MOTION SENSOR
NOT TO SCALE

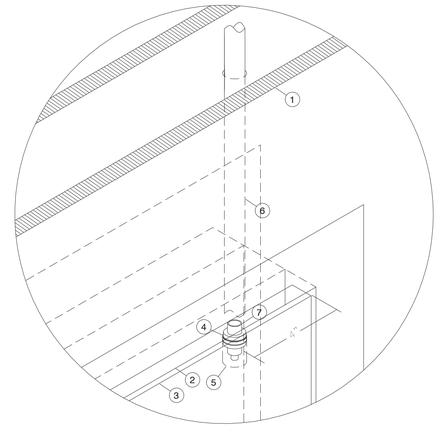

KEYED NOTES:

1. SCHEDULED PARTITION.
2. HEAD OF DOOR FRAME. PROVIDE TAB AT DOOR FRAME TO SECURE CONDUIT DIRECTLY ABOVE DOOR POSITION SWITCH.
3. SCHEDULED DOOR.
4. 15/16" DIAMETER HOLE IN THE HEAD OF FRAME FOR CONCEALED DOOR CONTACT.
5. 15/16" DIAMETER X 1 5/8" DEEP HOLE IN TOP OF DOOR FOR CONCEALED DOOR CONTACT MAGNET.
6. 1/2" CONDUIT FROM 6" X 6" X 4" JUNCTION BOX ABOVE DOOR (BY DIV 26).
7. DOOR CONTACT (REFERENCE SPECIFICATION).

6 TS401 DOOR CONTACT - SINGLE DOOR RECESSED
NOT TO SCALE

TEXAS PARKS & WILDLIFE

FORD POWELL &CARSON
Architects & Planners, Inc.
Architecture
Planning
Preservation
Interior Design
1138 East Commerce Street
San Antonio, Texas 78205
210/226-1246
FPC# 92705

REGISTERED COMMUNICATIONS DISTRIBUTION DESIGNER
BICSI
BRIAN K COMBS
BICSI ID# 118077
EXPIRES 12-31-21
RCDD
07-03-2020

COMBS Consulting Group
technology & security
SAN ANTONIO
8200 IH-10 West, Bldg. 4, Ste. 800
San Antonio, Texas 78230
Phone : 210-998-7887
AUSTIN
4545 N. Lamar, Ste. 103
Austin, Texas 78705

TYLER STATE PARK
HEADQUARTERS REPLACEMENT PHASE 1
PROJECT NUMBER: 112741

DATE: 07/03/2020
DESIGNED BY: RN
DRAWN BY: PM
REVIEWED BY: RN

no.	revision	date

SHEET TITLE
SECURITY TYPICAL DETAILS

SHEET NUMBER
TS401

CONSTRUCTION DOCUMENTS

PATH: G:\Projects - San Antonio - Active\Tyler Texas State Park\3 - Drawings\1 - Current Drawings\92705-Tyler SP Bldg_TECH_v2019.rvt
DATE: 7/2/2020 8:02:20 AM

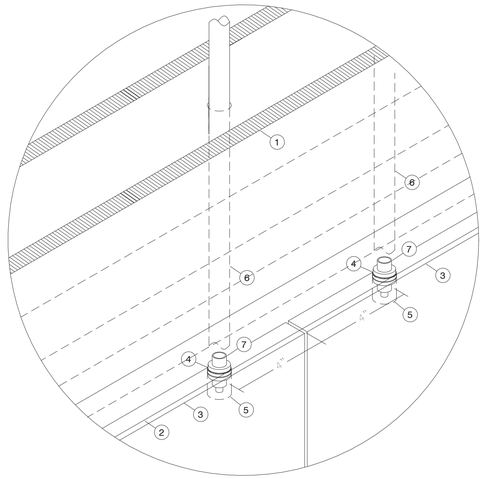

KEYED NOTES:

1. SCHEDULED PARTITION.
2. HEAD OF DOOR FRAME. PROVIDE TAB AT DOOR FRAME TO SECURE CONDUIT DIRECTLY ABOVE DOOR POSITION SWITCH.
3. SCHEDULED DOOR.
4. 15/16" DIAMETER HOLE IN THE HEAD OF FRAME FOR CONCEALED DOOR CONTACT.
5. 15/16" DIAMETER X 1 5/8" DEEP HOLE IN TOP OF DOOR FOR CONCEALED DOOR CONTACT MAGNET.
6. 1/2" CONDUIT FROM 6" X 6" X 4" JUNCTION BOX ABOVE DOOR (BY DIV 26).
7. DOOR CONTACT (REFERENCE SPECIFICATION).

1 TS402 DOOR CONTACT - DOUBLE DOOR RECESSED
NOT TO SCALE

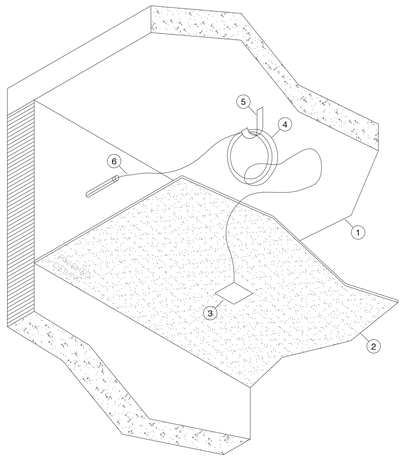

KEYED NOTES:

1. CEILING DECK AS SCHEDULED.
2. LAY-IN CEILING AS SCHEDULED.
3. CEILING MOUNTED GLASS BREAK DETECTOR (REFERENCE DIV 28 SPECIFICATIONS FOR EXACT MODEL).
4. 20 FOOT SERVICE LOOP ABOVE ACCESSIBLE CEILING NEATLY COILED AND SECURED TO J-HOOK (BY DIV 28).
5. J-HOOK ABOVE ACCESSIBLE CEILING (BY DIV 28).
6. SECURITY CABLE ABOVE ACCESSIBLE CEILING (BY DIV 28).

2 TS402 TYPICAL INTERIOR CEILING MOUNTED GLASS BREAK DETECTOR
NOT TO SCALE

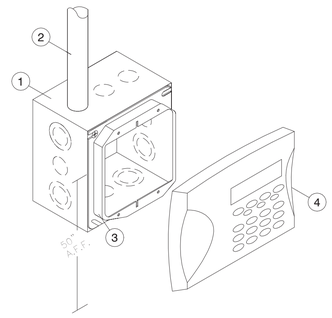

KEYED NOTES:

1. 4 1/16-INCH x 4 1/16-INCH x 2 1/8-INCH DOUBLE GANG BOX (BY DIV 26). RECESS WHEN POSSIBLE.
2. 1-INCH EMT CONDUIT FROM DOUBLE GANG BOX WITH 200 LBS PULL STRING AND NYLON BUSHING STUBBED TO CABLE TRAY (BY DIV 26).
3. DOUBLE GANG PLASTER RING (BY DIV 26).
4. SCHEDULED ARM/DISARM KEYPAD (REFERENCE SPECIFICATION).

3 TS402 TYPICAL ARM/DISARM KEYPAD DETAIL
NOT TO SCALE

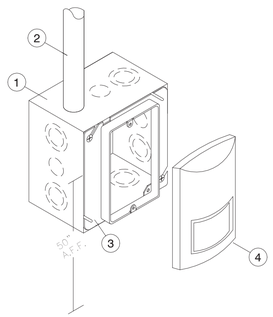

KEYED NOTES:

1. 4 1/16-INCH x 4-INCH x 2 1/8-INCH RECESSED DOUBLE GANG BOX (BY DIV 26).
2. 3/4-INCH EMT CONDUIT FROM DOUBLE GANG BOX WITH 200 LBS PULL STRING AND NYLON BUSHING STUBBED TO ABOVE NEAREST ACCESSIBLE CEILING (BY DIV 26).
3. SINGLE GANG PLASTER RING (BY DIV 26).
4. SCHEDULED MOTION DETECTOR (BY DIV. 28).

4 TS402 TYPICAL MOTION DETECTOR - WALL MOUNT
NOT TO SCALE

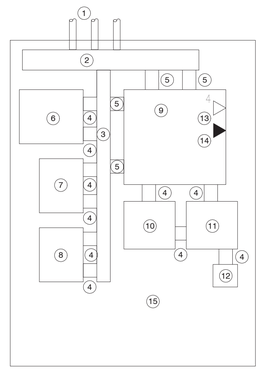

KEYED NOTES:

1. CONDUIT FEEDS FROM FIELD.
2. 8-INCH H X 8-INCH D X 4-FOOT W GUTTER RACEWAY WITH COVER.
3. 4-INCH FINGERDUCT RACEWAY WITH COVER.
4. 2-INCH METALLIC CONDUIT.
5. 4-INCH METALLIC CONDUIT.
6. ACCESS CONTROL PANEL (BY DIV. 28).
7. INTRUSION DETECTION CONTROL PANEL (BY DIV. 28).
8. INPUT/OUTPUT PANEL (BY DIV. 28).
9. DEMARCATION ENCLOSURE.
10. DEVICE POWER SUPPLY (BY DIV. 28).
11. LOCK POWER SUPPLY (BY DIV. 28).
12. 120VAC EMERGENCY QUAD RECEPTACLE, NON-SITCHED, DEDICATED 20AMP (BY DIV. 26).
13. NETWORK OUTLET (BY DIV. 27).
14. TELEPHONE INTERFACE (BY DIV. 27).
15. 8-FEET H X 4-FEET W X 1/2-INCH FIRE RATED PLYWOOD BACKBOARD.

5 TS402 TYPICAL SECURITY RISER BACKBOARD DETAIL
NOT TO SCALE

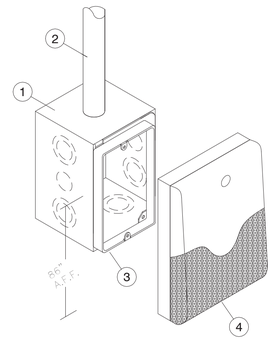

KEYED NOTES:

1. 2-INCH x 4-INCH x 2 1/8-INCH RECESSED SINGLE GANG BOX (BY DIV 26).
2. 1-INCH EMT CONDUIT FROM SINGLE GANG BOX WITH 200 LBS PULL STRING AND NYLON BUSHING STUBBED OUT ABOVE ACCESSIBLE CEILING IN THE SAME ROOM WHERE THE DEVICE IS LOCATED. IF THE ROOM WHERE THE DEVICE IS LOCATED DOES NOT HAVE AN ACCESSIBLE CEILING, THE CONDUIT SHALL ROUTE TO THE NEAREST ACCESSIBLE CEILING OFF OF A MAIN CORRIDOR. CONDUIT PATHWAY SHALL TAKE THE SHORTEST ROUTE TO THE APPLICABLE MDF/IDF ROOM TO MINIMIZE THE CABLE LENGTH (BY DIV 26).
3. SINGLE GANG PLASTER RING (BY DIV 26).
4. SCHEDULED WALL-MOUNTED SIREN WITH LED STROBE (BY DIV. 28).

6 TS402 SENSOR WITH LED STROBE - WALL MOUNTED DETAIL
NOT TO SCALE

TEXAS PARKS & WILDLIFE

FORD POWELL &CARSON
Architects & Planners, Inc.
Architecture
Planning
Preservation
Interior Design
1138 East Commerce Street
San Antonio, Texas 78205
210/226-1246
FPC# 92705

REGISTERED COMMUNICATIONS DISTRIBUTION DESIGNER
Bicsi
BRIAN K COMBS
BICSI ID# 118077
EXPIRES 12-31-21
RCDD
07-03-2020

COMBS Consulting Group
technology & security
AUSTIN
9020 Capital of Texas Hwy. N., Bldg. 4, Ste. 400
Austin, Texas 78759
SAN ANTONIO
8200 Wurzbach Road, Ste. 103
San Antonio, Texas 78230
Phone : 210-998-7887

TYLER STATE PARK
HEADQUARTERS REPLACEMENT PHASE 1
PROJECT NUMBER: 112741

DATE: 07/03/2020
DESIGNED BY: RN
DRAWN BY: Author
REVIEWED BY: RN

no.	revision	date

SHEET TITLE
SECURITY TYPICAL DETAILS

SHEET NUMBER
TS402

CONSTRUCTION DOCUMENTS

PATH: G:\Projects – San Antonio – Active\Tyler Texas State Park\3 – Drawings\1 – Current Drawings\92705-Tyler_SP_Bldg_TECH_v2019.rvt
DATE: 7/2/2020 8:02:20 AM

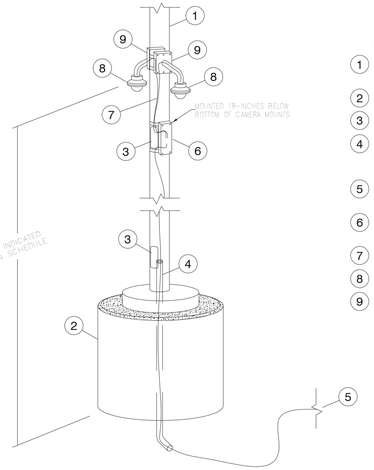

KEYED NOTES:

1. SCHEDULED POLE WITH CABLE CHANNEL AS SPECIFIED (BY DIV. 26).
2. SCHEDULED POLE BASE AS SPECIFIED (BY DIV. 26).
3. POLE ACCESS POINTS (BY DIV. 26).
4. 1-INCH CONDUIT WITH 200 LBS PULL STRING AND NYLON BUSHING STUBBED UP TO ACCESS POINT (BY DIV. 26).
5. POWERED FIBER CABLE AS SPECIFIED FROM MDF/IDF TO CAMERA POLE (BY DIV. 27).
6. POWERED FIBER CABLE POE INJECTOR AS SPECIFIED (BY DIV. 27).
7. PATCH CABLES AS SPECIFIED (BY DIV. 27).
8. IP CAMERA AND MOUNTS AS SPECIFIED (BY DIV. 28).
9. POLE MOUNT BRACKETS AS SPECIFIED (BY DIV. 28).

1 / TS403 TYPICAL POWERED FIBER POLE MOUNTED CAMERAS
NOT TO SCALE

TEXAS PARKS & WILDLIFE

FORD POWELL &CARSON
Architects & Planners, Inc.
Architecture
Planning
Preservation
Interior Design
1138 East Commerce Street
San Antonio, Texas 78205
210/226-1246
FPC# 92705

REGISTERED COMMUNICATIONS DISTRIBUTION DESIGNER
Bicsi
BRIAN K COMBS
BICSI ID# 118077
EXPIRES 12-31-21
RCDD
07-03-2020

COMBS Consulting Group
technology & security
SAN ANTONIO
8200 IH-10 West, Ste. 103
San Antonio, Texas 78230
Phone : 210-698-7887
AUSTIN
4425 S. Mopac, Bldg. 4, Ste. 800
Austin, Texas 78735

TYLER STATE PARK
HEADQUARTERS REPLACEMENT PHASE 1
PROJECT NUMBER: 112741

DATE: 07/03/2020
DESIGNED BY: RN
DRAWN BY: Author
REVIEWED BY: RN

no.	revision	date

SHEET TITLE
SECURITY TYPICAL DETAILS

SHEET NUMBER
TS403

CONSTRUCTION DOCUMENTS

DATE: 7/2/2020 8:02:20 AM
PATH: G:\Projects - San Antonio - Active\Tyler Texas State Park\3 - Drawings\1 - Current Drawings\92705-Tyler SP Bldg_TECH_v2019.rvt

TYLER STATE PARK ACCESS CONTROL SYSTEM SCHEDULE

CARD READER NO.	DEVICE HEIGHT (TO CENTER)	DOOR TYPE	TERMINATION POINT (SR)	DOOR LABEL
CR-1-01	42 INCHES AFF	SINGLE	IT ROOM #3	18A
CR-1-02	42 INCHES AFF	SINGLE	IT ROOM #3	10A
CR-1-03	42 INCHES AFF	DOUBLE	IT ROOM #3	11
CR-1-04	42 INCHES AFF	SINGLE	IT ROOM #3	16
CR-1-05	42 INCHES AFF	SINGLE	IT ROOM #3	VESTIBULE 18 TO CORRIDOR 16

TYLER STATE PARK INTRUSION DETECTION SYSTEM SCHEDULE

DEVICE POINT NO.	DEVICE HEIGHT (TO CENTER)	DEVICE TYPE	LOCATION	MOUNTING
IO-1-01	TOP OF DOOR/DOOR FRAME	DOOR CONTACT DPDT	DOOR 4A	DOOR/DOOR FRAME
IO-1-02	108 INCHES AFF	WALL MOUNTED MOTION DETECTOR	STAFF WORK AREA 9	WALL
IO-1-03	108 INCHES AFF	WALL MOUNTED MOTION DETECTOR	LOBBY 11	WALL
IO-1-04	CEILING	GLASS BREAK DETECTOR	STAFFWORK AREA 10	CEILING
IO-1-05	UNDERCOUNTER	DURESS SWICTH	STAFFWORK AREA 10	UNDERCOUNTER
IO-1-06	CEILING	GLASS BREAK DETECTOR	INTEPRETIVE GALLERY 17	CEILING
IO-1-07	CEILING	GLASS BREAK DETECTOR	INTEPRETIVE GALLERY 17	CEILING
IO-1-08	96 INCHES AFF	WALL MOUNTED STROBE	INTEPRETIVE GALLERY 17	WALL
IO-1-09	108 INCHES AFF	WALL MOUNTED MOTION DETECTOR	CORRIDOR 16	WALL
IO-1-10	TOP OF DOOR/DOOR FRAME	DOOR CONTACT DPDT	DOOR 15B	DOOR/DOOR FRAME
IO-1-11	CEILING	GLASS BREAK DETECTOR	CONFERENCE ROOM 22	CEILING
IO-1-12	108 INCHES AFF	WALL MOUNTED MOTION DETECTOR	CONFERENCE ROOM 22	WALL
IO-1-13	TOP OF DOOR/DOOR FRAME	DOOR CONTACT DPDT	DOOR 22B	DOOR/DOOR FRAME
IO-1-14	TOP OF DOOR/DOOR FRAME	DOOR CONTACT DPDT	DOOR 02	DOOR/DOOR FRAME
IO-1-15	TOP OF DOOR/DOOR FRAME	DOOR CONTACT DPDT	DOOR 01	DOOR/DOOR FRAME
KP-1-01	42 INCHES AFF	ALARM KEYPAD	STAFFWORK AREA 10	WALL
KP-1-02	42 INCHES AFF	ALARM KEYPAD	VESTIBULE 18	WALL

TYLER STATE PARK SURVEILLANCE SYSTEM SCHEDULE

CAMERA NO.	DEVICE HEIGHT (TO CENTER)	DEVICE PART NUMBER	IP CAMERA TYPE
C-E-01	9 FT 6 IN AFG	AXIS P3227-LVE	WALL MOUNTED EXTERIOR SINGLE LENS CAMERA
C-E-02	9 FT 6 IN AFG	AXIS P3227-LVE	WALL MOUNTED EXTERIOR SINGLE LENS CAMERA
C-E-03	WALL MOUNTED AT 12 FT. AFF - FIELD VERIFY HEIGHTS	AXIS P3807-PVE	WALL MOUNTED EXTERIOR MULTI SENSOR CAMERA 180 DEG VIEW
C-E-04	WALL MOUNTED AT 12 FT. AFF - FIELD VERIFY HEIGHTS	AXIS P3227-LVE	WALL MOUNTED EXTERIOR SINGLE LENS CAMERA
C-E-05	WALL MOUNTED AT 12 FT. AFF - FIELD VERIFY HEIGHTS	AXIS P3807-PVE	WALL MOUNTED EXTERIOR MULTI SENSOR CAMERA 180 DEG VIEW
C-E-06	MIN 12 FT AFG	AXIS Q1700-LE	POLE MOUNTED EXTERIOR LICENSE PLATE CAPTURE CAMERA
C-E-07	MIN 12 FT AFG	AXIS Q1700-LE	POLE MOUNTED EXTERIOR LICENSE PLATE CAPTURE CAMERA
C-E-08	MIN 12 FT AFG	AXIS P3807-PVE	POLE MOUNTED EXTERIOR MULTI SENSOR CAMERA 180 DEG VIEW
C-1-01	CEILING MOUNT	AXIS M3046-V 2.4 mm	CEILING MOUNTED INTERIOR SINGLE LENS CAMERA
C-1-02	10 FT. AFF	AXIS P3807-PVE	WALL MOUNTED INTERIOR MULTI SENSOR CAMERA 180 DEG VIEW

TEXAS PARKS & WILDLIFE

FORD POWELL & CARSON
Architects & Planners, Inc.
Architecture
Planning
Preservation
Interior Design
1138 East Commerce Street
San Antonio, Texas 78205
210/226-1246
FPC# 92705

REGISTERED COMMUNICATIONS DISTRIBUTION DESIGNER
BICSI
BRIAN K COMBS
BICSI ID# 118077
EXPIRES 12-31-21
* RCDD *
07-03-2020

COMBS Consulting Group
technology & security
SAN ANTONIO
4646 Hamilton Wolfe, Bldg. 4, Ste. 400
San Antonio, Texas 78230
Phone : 210-998-7887
AUSTIN
9442 Capital of Texas Hwy. N., 100
Austin, Texas 78759

TYLER STATE PARK

HEADQUARTERS REPLACEMENT PHASE 1

PROJECT NUMBER: 112741

DATE: 07/03/2020
DESIGNED BY: RN
DRAWN BY: PM
REVIEWED BY: RN

no.	revision	date

SHEET TITLE

SECURITY SCHEDULES

SHEET NUMBER

TS501

CONSTRUCTION DOCUMENTS

DATE: 7/3/2020 8:02:20 AM PATH: G:\Projects - San Antonio - Active\Tyler Texas State Park\3 - Drawings\1 - Current Drawings\92705-Tyler SP Bldg_TECH_v2019.rvt