Ken Stone Heavy

Excavator

RH18
Operation instruction

Shandong Ken Stone Heavy Machinery CO.,Ltd.

Please Note

Topic: Maintenance and parts precautions

1. First of all, thank you for choosing and using Kenshi products.
2. When the equipment fails, it should be repaired by our company or the designated maintenance company with pure parts.
3. At present, there are counterfeit and shoddy and illegal means of entry into the market, and there are unauthorized and trained companies or individuals to repair our products, resulting in many legacy problems, seriously affecting the performance and service life of the equipment.
4. In view of the above, we would like to invite our customers:
1) The use of non-pure parts may have no obvious impact on the equipment in the short term, and will inevitably cause a series of adverse consequences. In order to avoid equipment damage, performance degradation, resulting in more serious losses, do not use non-pure parts.
2) When customers buy parts, be sure to buy from our company or the company authorized to sell the parts, and pay attention to screening, if there is any suspicious phenomenon, please contact our company to confirm.
3) Customers need to repair the equipment, please call Ken Shi national unified service telephone 0635-5663999 repair.
4) If the equipment fails due to the use of non-pure parts or maintenance by unauthorized companies or individuals, even within the warranty period, our company has no warranty responsibility.
5) With the improvement of the product, the content of this manual may lag. If customers need the latest product information, please contact our company or our authorized distributor.
5. Thank you again for the usual business cooperation.

With best regards

Shandong Ken Stone Heavy Machinery CO.,Ltd.

Contents

Safety Warning Signs.....0-1

Introduction.....0-2

Machine Description 0-3

Safety.....1-1

General Precautions 1-2

Precautions during Preparations.....1-10

Safety Measures at Start.....1-12

Operation Precautions 1-14

Precautions for Parking.....1-24

Precautions during Transport 1-25

Precautions for Maintenance 1-27

Safety Signs (Markings).....1-37

Control 2-1

Component Name (RH18) 2-2

Cover 2-4

Cover 2-4

Starter Key.....2-4

Access Panel 2-4

Fuse Case.....2-5

opening the side gate 2-6

Front access cover 2-7

Seat bracket/upper access cover.....2-8

uel tank cap/fuel filter port.....2-9

Seat and Seat Belt 2-10

Seat 2-10

Seat Belt.....2-11

Electrical control panel 2-13

Precautions 2-15

After-Service Information 2-16

Switches 2-17

Starter Switch 2-17

Horn button 2-17

light Switch..... 2-17

Joysticks and Pedals 2-18

Safety lock handle 2-18

Accelerator joystick..... 2-18

Joysticks 2-18

Bulldozing blade joystick 2-19

Traveling Joystick/Pedal 2-20

Boom swing pedal..... 2-20

Accessory 2-21

Auxiliary hydraulic pipeline..... 2-21

Operations..... 3-1

Before Start of Operations 3-2

Getting on/off Machine 3-2

Walk-Around Checking..... 3-2

Daily Routine Checking 3-2

Start and Stop of Engine 3-3

Before Start of Engine..... 3-3

Start of Engine..... 3-4

start in code weather..... 3-4

Stop of Engine..... 3-5

Operations of Machine 3-6

Joystick Mode (ISO Mode) 3-6

Warm up the engine (hydraulic oil) 3-7
Checking after Warm-up.....3-8
Operations of Traveling
Joystick/Pedal 3-9
Stop of Traveling 3-12
Operations of Working Device.....3-12
Operations of Procedures 3- 15
Prohibited Operations 3-15
Precautions for Operations.....3-18
Precautions for Traveling on Slopes ..3-19
Escape from Mud.....3-21
Allowed Operations of Machine 3-22
Parking of This Machine.....3-24
Parking.....3-24
Checking after Stop of Engine 3-24
Treatment in Cold Weathers.....3-26
Preparations for Cold Weathers 3-26
Precautions after Operation 3-26
After Cold Weathers 3-26
Handling of Rubber Tracks 3-28
Prohibition 3-28
Precautions 3-29
Guard against Fall off of
Rubber Tracks.....3-30

Transportation.....4-1

Loading and Unloading.....4-2
Lifting of Machine 4-4
Fixing of Machine 4-6

Maintenance 5-1

Overview 5-2
Maintenance Overview 5-2
Maintenance Precautions..... 5-2
Service Data 5-4
Fuel and Lubricant Table..... 5-4
Periodical Replacement of Hydraulic
Oil 5-7
List of Wearing Parts 5-8
List of Tools (If installed)..... 5-9
Table of Tightening Torques..... 5-10
Critical Safety Parts 5- 11
Maintenance List 5- 13
Walk-Around Checking 5- 14
Opening of engine hood and machine
hood for checking 5-15
Walk-around checking of machine 5-16
Checking in Driver Seat 5-16
Daily routine checking (Every 10h).....
5- 17
Checking and adding of coolant 5-17
Checking and adding of engine oil 5-18
Checking of fuel level 5-18
Checking of Fuel-Water Separator 5-19
Checking of hydraulic oil tank
oil level and adding of oil..... 5-21
Lubrication of Working Device 5-22
After first 50h (For new machine only) .....
5-23
Checking and adjustment of fan belt . 5-23

Replacement of hydraulic oil return filter..... 5-24
Every 50-hour 5-26
Checking and Adjustment of Front Toe-in 5-26
Lubricate the slewing bearing 5-27
Lubrication of slewing motor gear.....5-28
Water drainage from fuel tank 5-28
Checking of battery electrolyte level and adding of electrolyte.....5-29
Every 100-hour 5-31
Cleaning of water separator 5-31
After first 250h (For new machine only).....5-32
Replacement of traveling motor gear oil 5-32
Every 250-hour 5-33
Checking and adjustment of fan belt..5-33
Replacement of engine oil and filter ..5-33
Cleaning of Air Filter.....5-34
Checking of accelerator control system.....5-35
Cleaning of radiator fins and oil cooler fins 5-35
Replacement of Fuel Filter 5-36
Every 500-hour 5-37
Replacement of Hydraulic Oil Tank Return Filter.....5-37
Replacement of Water Separator Filter 5-37
Every 1000-hour 5-39
Replacement of traveling motor gear oil 5-39
Replace the air filter element 5-39
Checking and Adjustment of Engine Valve Clearance..... 5-39
Replace the air breather (if equipped)-- 5-40
Cleaning of Engine Cooling System . 5-41
Every 1500-hour..... 5-44
Checking and Cleaning of Engine Fuel Injector Nozzles 5-44
Checking of Crankcase Ventilation Hole System 5-44
Every 2000hour..... 5-45
Connection of Engine Valve Seats..... 5-45
Replacement of Hydraulic Oil and Cleaning of Oil Suction Filter Screen.....5-45
As necessary 5-47
Replace bucket teeth..... 5-47
Replacement of Bucket 5-48
Lubrication of Joysticks and Pedals .. 5-51
Joystick..... 5-51
Checking of Rubber Tracks 5-52
Maintenance during Long-Time Parking 5-55

Troubleshooting 6-1

Symptoms other than Malfunctions..... 6-2
Engine Overheating 6-3
No Battery Power 6-4
Burnout of Fuse 6-6
Checking and Replacement of Fuses... 6-6
Checking of Fuses 6-7
Restart after Refueling..... 6-8
Air Bleeding from Fuel System..... 6-8
Flashing of Warning Lamps 6-9
Other Symptoms 6-10
Towing 6-13
Damage of Cab or Shelter 6-14

Parameters of complete vehicle.....7-1
RH18 Basic Parameters 7-2
RH18 Overall Dimensions Machine.....7-3
RH18 Operating Range.....7-4
RH18 lifting power 7-4

Optional Products 8-1
General Safety Measures 8-2
Safety Measures 8-2
Precautions for Installation of
Working Device 8-2
Precautions for Operations of Attachment
....8-3
Hydraulic Breaking Hammer 8-6
Precautions for Operations.....8-7
Periodical Replacement of Hydraulic Oil ...8-8
Traveling Alarm 8-11
Layout and protected circuits of fuses.....8-11
Option quality.....8-12

Safety Warning Signs

⚠ Warning



This sign denotes a safety warning.
The information behind the sign includes important safety information.

Please read and understand this information to prevent personal injuries or deaths.

The machine owner or employer is responsible for instructing every operator to operate all equipment correctly and safely in detailed manner. All personnel operating this machine shall sufficiently understand the contents of this manual.

Before operating the machine, all operation personnel must receive the guidance on related functions of excavator.

Before operating this machine in a working site, learn and practice how to use the machine controls correctly in a safe and spacious place.



The improper methods during operations, checking, and maintenances of machine will result in injuries or deaths.

Before any operation, checking, or maintenance of machine, please read and understand this manual.

Please always carry this manual with you. It's preferable to preserve this manual on the machine. If this manual is lost or damaged, please immediately order a new manual from a dealer. At the transfer of this machine, please ensure to hand this manual over to the new owner.

The machine supplied by Kenstone Heavy Machinery conforms to the local standards and specifications of the country exported. If your machine is purchased from other country or from an individual or company of other country, this machine is probably not installed with the safety devices or safety standards required for the operations of this machine in your country. If you have any doubt on the compliance of your machine with the relevant standards and regulations in your country, please contact a Kenstone dealer.

Signal Words

The safety information on this manual and machine identifications is indicated by words "Danger", "Warning", and "Notice". The meanings ofthese signal words are as below:

Danger

"Danger" denotes high dangerous level, for which the negligence will result in death or serious injury.

Warning

"Warning" denotes medium danger level, for which the negligence will probably result in death or serious injury.

Notice

"Notice" denotes low danger level, for which the negligence will result in minor or medium injuries.

Important: The word "Importance" is intended to alert the operation and maintenance personnel of the possible damages of machine and its components.

It's impossible for us to predict all possibly existed dangers. Therefore, the warnings in this manual or on this machine can't cover all possible accidents. Therefore, during the operations of machine, ensure to take cautions and abide by all conventional safety measures to prevent harms to machine, operation personnel, or other personnel.

Introduction

Foreword

This manual describes the operations, checking, and maintenances of this machine and the safety descriptions to be observed during operations.

Should you have any doubt, please contact a dealer or service provider of Kenstone Heavy Machinery.

- In some details, this manual probably differs from the manual attached on the machine in use.
- Please be noted that the information contained in this manual and the parameters of machine are subject to changes without further notice.

Machine No.:

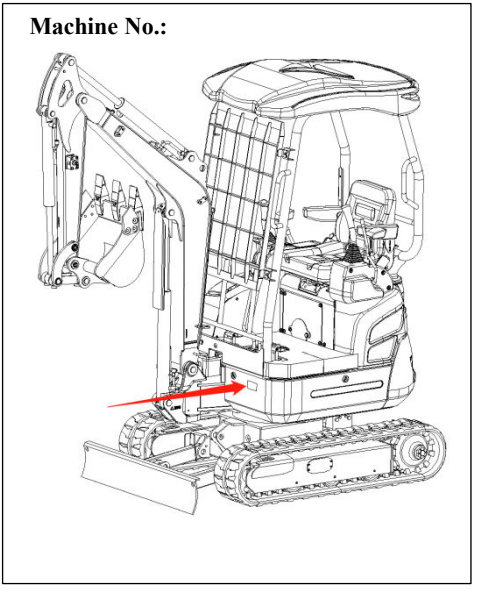

Machine No.:

This manual is contained in the attached document package.

Engine No.:

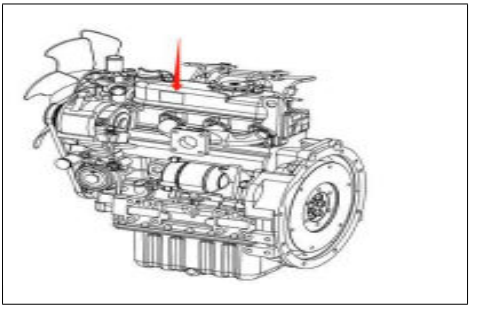

Serial number

Important: Do not disassemble the machine nameplate with serial number. Observe the serial numbers of machine and engine and record them in the blank area below.

Front, Rear, Left, and Right

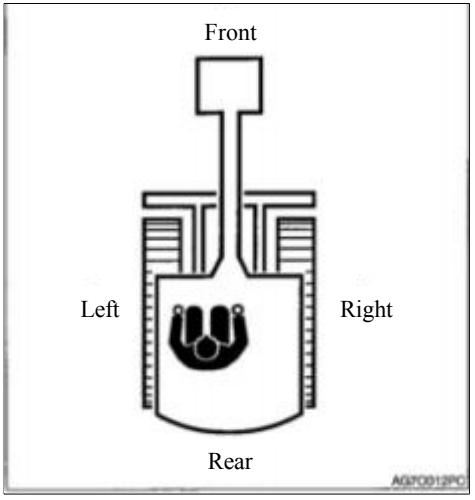

The front, rear, left, and right of the machine indicated in this manual are based on the status sitting in the driver seat, with the bulldozing blade visible in the front.

Designated Operations

This machine is mainly applied for following operations:

- Digging
- Ditching
- Side ditching
- Leveling
- Loading

Product Features

- "Flexible machine width structure" track width
- Low engine noise and emission

Run-in

First 100h (Based on reading of hourmeter) for new machine

Operate as per the following instructions:

Using the new machine without run-in will deteriorate acceleration performance and probably shorten the life ofmachine.

- Sufficiently warm up the engine and hydraulic oil.
- Avoid heavy-load and rapid operations. Maintain the load at approximately 80% of maximum load capacity during operations.
- Do not start, accelerate, steer, or stop suddenly, unless it's really necessary.

Notes about Reading of This Manual

Please be noted that the descriptions and graphics contained in this manual probably are not applicable for your machine in use. The numbers in graphics are marked by circles. The same numbers in the descriptions are marked in parentheses. (For instance: ①→(1))

Signs used in this manual

The meanings of the signs used in this manual are as below.

, …. Prohibition

……. Lock

……Unlock

Safety 

General Precautions

You are liable to abiding by the safety laws and regulations of relevant departments and fulfilling the operations, checking, and maintenances of machine. As a matter of fact, all accidents are caused by the non-compliance with basic safety rules and precautions.

Most accidents can be avoided by authenticating the potential dangers in advance.

Please read and understand all safety information related to the prevention of accidents. Please ensure to operate the machine only after you have understood how to operate, check, and maintain the machine correctly.

Abiding by All Safety Regulations

- The machine must be operated, checked, and maintained by trained and qualified personnel.
- During the operations, checking, and maintenances of machine, ensure to understand and abide by all rules, regulations, precautions, and safety measures.
- Do not operate, check, or maintain the machine under the adverse influence of alcohol, drug, medicine, or fatigue or under sleepy status.

Upon detection ofmachine abnormality

During the operations, checking, or maintenances of machine, upon detection of any machine abnormality (Such as noise, vibration, smell, abnormal instrument, smoking or oil leakage, error warning indication, and abnormal display of electric control panel), immediately notify a sales or service dealer and take appropriate measure. Do not operate the machine before the abnormality is solved.

Operating Temperature Range

To maintain the performances and prevent the earlier wear of machine, please abide by the following operating conditions.

- Do not operate the machine when the outside temperature is more than+45℃ or less than-15℃
- The operations under+45℃ outside temperature will probably result in engine overheating and deteriorated engine performance. In addition, the hydraulic oil will probably become really hot to harm the hydraulic devices.
- The operations under-15℃ outside temperature will probably harden the rubber parts (Such as gaskets) and cause earlier wear or damage ofmachine.
- To operate the machine under the

condition beyond above-mentioned outside temperature range, please consult with your sales or service dealer.

Wearing Appropriate Clothing and Protective Appliances

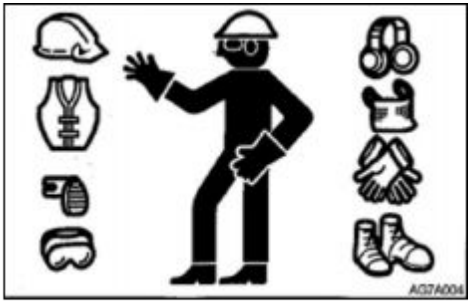

- Do not wear loose clothing or wear decorative articles that will probably hitch to any joystick or motion part.
- Do not wear oil or fuel contaminated clothing that is easily vulnerable to fire.
- As per the requirements of working environment, wear safety shoes, safety helmet, safety goggles, filtration mask, thick gloves, earflaps, and other protective appliances. During the use of grinding miller, breaking hammer, or compressed air, please wear appropriate protective appliances, such as safety goggles and filtration mask, as the splashing of metal chippings or other objects will probably cause serious harms.
- Please use the hearing protection devices during the operations of machine. Exposure to a high noise environment for a long time will result in harm or even complete loss of hearing.

Installation of Fire Extinguisher and First-Aid Kit

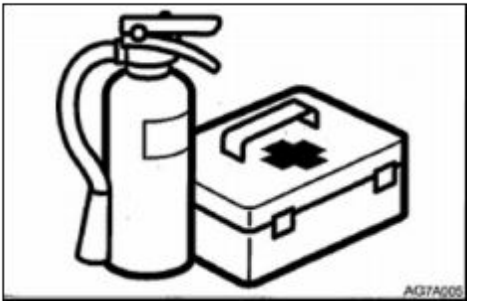

Fulfill the preparations for fire and accident.

- Install the fire extinguisher and first-aid kit and learn how to use them.
- Learn how to extinguish fire and handle accident.
- Know how to contact emergency aid and fabricate the emergency contact list.

No Disassembling of Safety Devices

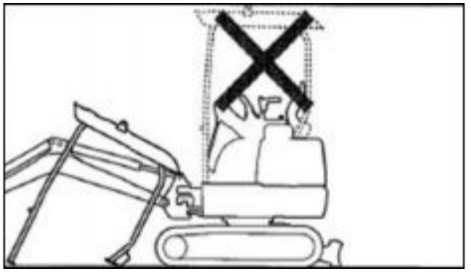

- Please ensure that all guardrails, shelters, and doors are installed properly and securely. Before operating the machine, please repair or replace damaged parts.
- Know how to use safety lock handle, seat belt, and other safety devices and understand the correct operation methods.
- Do not disassemble any safety device, unless for the purpose of checking and repair. Always keep all safety devices under good working condition.

Setup of Signaler and Flagman



Learn how to use the gestures of specific operation needs and designate the person responsible for making gestures.

- All personnel must completely understand all gestures.
- The operator must respond to the gestures of designated person only. However, the operator must abide by the stop gesture made by anyone in all cases.
- The signaler must stand in a clearly visible place while making the gestures.

Precautions for Standing up from or Leaving Driver Seat

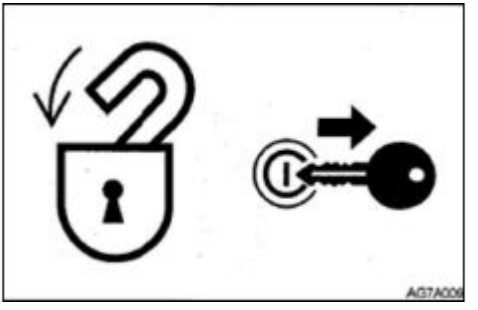

- Before standing up from the driver seat to open/close windows or disassemble/install the lower window, lower the working device onto the ground, lift up and lock the safety lock handle, and stop the engine. When the safety lock handle is lowered down (Unlocked), the accidental touch of any joystick will result in sudden movement of machine and cause serious injuries or deaths.

- Please be noted that, even if the safety lock handle is placed at locking position, the bulldozing blade, boom, and auxiliary hydraulic controls can't be locked.

Do not touch such controls accidentally.

- While lifting up or lowering down the safety lock handle, take cautions not to touch any joystick.

Before leaving the driver seat, lower the working device onto the ground, lift up the safety lock handle to locking position, and stop the engine. Meanwhile, ensure to withdraw the key, close the doors and hoods, and carry the key with you and then preserve it in a designated place.

Guard against Fire and Explosion Dangers



Keep fuel, lubricating oil, grease, and antifreeze away from flame. The fuel is especially inflammable and really dangerous.

- Handle these inflammables away from ignited cigarette, match, lighter, and other flame or fire source.
- Do not smoke or use open fire while handling fuel or performing the operations of fuel system.
- Do not leave the operation site while filling fuel or lubricating oil.
- Do not disassemble the fuel tank cap or refuel while the engine is running or is not cooled down. In addition, do not splash fuel to any machine hot surface or electronic system part.
- Immediately clean the overflown fuel or lubricating oil thoroughly.
- Check for leakage of fuel and lubricating oil. Please eliminate the leaks and clean the machine before operations.
- Please move the inflammables to a safe place before polishing or welding operations.
- Do not cut or weld any pipeline or pipe that probably contains inflammable liquid. Please clean thoroughly by non-inflammable solvent before cutting or welding.
- Remove all wastes and impurities from machine. Ensure that there is no oil contaminated rag or other inflammable on the machine.
- Handle all solvents and dry chemicals

(Foam fire extinguisher) as per the manufacturer's procedures indicated on the containers. Operate in a well-ventilated place.

- Never use fuel for cleaning purpose. Always use non-inflammable solvent.
- Please open doors and windows for thorough ventilation during the handling of fuel and the cleaning of oil stain or paint.
- Preserve all inflammable liquids and materials in a safe and well-ventilated place.
- The short-circuit of electric system will probably result in fire. Daily check the wire connections for looseness and damage. Re-tighten loose connectors and cable clamps. Repair or replace damaged wires.
- Fire accident caused by pipelines: Ensure that the clamps, protection devices, and cushion pads of hoses and pipes are securely fixed. In event of looseness, the hoses and pipes will be damaged due to vibration or contact with other parts during operations. This will probably result in spray of high pressure oil to cause fire accident or harms.

Toxic Exhaust Gas from Engine



- Do not operate the engine in an enclosed place with poor ventilation.
- If the natural ventilation is not possible, install ventilation fan, fan, extended exhaust pipe, or other ventilation device.

Handling of Asbestos Powders

The inhalation of asbestos powders will probably cause lung cancer. While handling the materials probably containing asbestos, take the following safety measures:

- Do not sweep by compressed air.
- Avoid polishing or grinding asbestos-contained parts.
- During cleaning, use a vacuum device installed with high-efficiency particulate air filter (HEPA).
- If there is no other method for control of powders, please wear the specified respirator. During indoor operations, please install a ventilation system with polymer filter.

- During operations, the non-authorized personnel are prohibited to access the working zone.
- Please strictly abide by the rules and environmental standards applicable for this working zone.

Guard against Crushing and Cuts



Never place your hand, foot, or other body parts between the superstructure and chassis or tracks, between machine body and working device, or between cylinder and motion parts. During movement of machine, these clearances will change to probably cause serious injuries or deaths.

Use of Optional Products

- Please consult with Kenstone Heavy Machinery before installing optional products. Based on the attachment types and their combinations, the attachments will probably come into contact with the cab or other machine parts. Before use, ensure that the installed optional products will not come into contact with other parts.
- Do not use any attachment not approved by Kenstone Heavy Machinery. Otherwise, it will probably endanger the safety or cause adverse influence on operations or life ofmachine.
- Kenstone Heavy Machinery will not be liable for any injury, accident, or product damage arising from the use of non-approved attachments.

No Modification to Machine

The non-authorized modifications to the machine will cause injuries or deaths.

All non-authorized modifications are prohibited for any part ofmachine.

The following standards must be met for operations in Beijing.

China-IV emission and smoke number requirements specified by Limits and

Measurement Methods for Exhaust Pollutants from Non-Road Diesel Engines come into force on January 1, 2015.

China-III smoke number requirement specified by Limits and Measurement Methods for Exhaust Pollutants from Non-Road Diesel Engines in Use come into force on January 1, 2015.

Beijing Regulation on Prevention and Control of Air Pollution come into force on March 1, 2014.

Precautions during Preparations

Understanding of working zone

Before starting operations, understand the situation of working zone to ensure safety.

- Check the terrain and ground situation of working zone. For indoor operations, check the building structure and when necessary take safety measures.
- Ensure to keep away from dangers and obstacles such as water ditch, underground pipelines, trees, cliffs, overhead cables, and roads with falling stone or landslide danger.

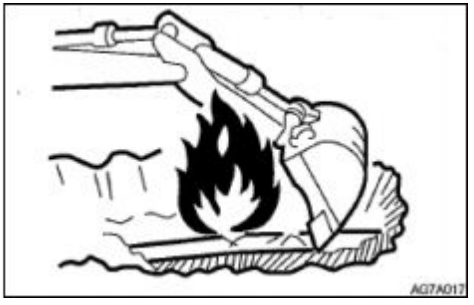

- Check the positions of underground gas pipelines, water pipelines, and electric cables together with administrator. If necessary, discuss with administrator to determine the detailed safety measures to be taken to ensure safety.
- During operations on road, ensure to take the safety of pedestrians and vehicles into consideration.
- Use a signaler and/or signals.
- Isolate the working zone against the access of non-authorized personnel.
- Before operations in water or driving through shallow rivers, check the water depth, ground firmness, and flow rate in advance.

Understand more operation description information with reference to the “Precautions during Operations”

Checking of Bridge Strength

Please check the permissible load before driving on bridges or structures. If the strength is insufficient, reinforce the bridges or structures.

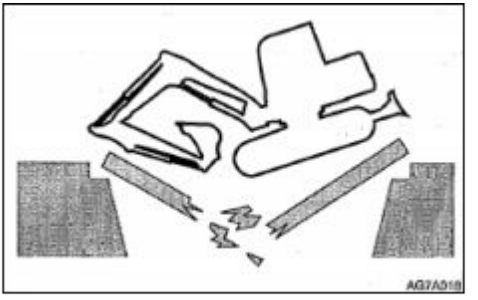

Always Keeping Clean Machine

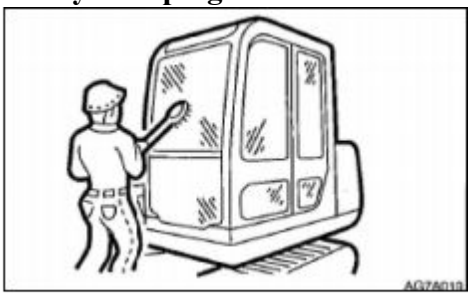

Wipe away lubricating oil, grease, mud, snow, and ice, in order to prevent accident due to slip.

- Eliminate all loose objects and unnecessary devices in the machine.
- Remove dusts, lubricating oil, and grease from engine portion to prevent fire accident.
- Clean the area around operator's seat and remove all unnecessary objects from the machine.

Daily Checking and Maintenances

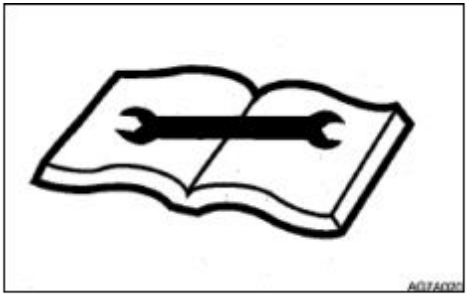

The failure to find out or repair the abnormalities or damages ofmachine will cause accidents.

- Before operations, fulfill the designated checking and when necessary repair immediately.
- In event of operation failure due to malfunction or engine malfunction, immediately stop the engine as per stop procedure and park the machine securely, till the malfunction is repaired.

Precautions within Cab (If installed)

- Before entering the cab, remove the mud and oil/grease from the shoe bottoms. Operating the machine pedals with shoe bottoms affixed with mud and oil/grease will result in accidents due to slip.
- Do not place any part or tool around the driver seat.
- Do not place any plastic bottle in the cab or install any sucker on window glasses.

  The plastic bottle or sucker can play a lens role to probably cause fire accident.
- Do not use a mobile phone during traveling or operations.
- Do not bring any inflammable or explosive into cab.
- Do not leave a lighter in the cab. The lighter will probably explode along with the rise ofroom temperature.

Safety Measures at Start

Support your body weight by three-point safety posture while getting on/offthe machine.

- Do not jump on or offthe machine. Do not attempt to get on or offa moving machine.
- Before getting on or off the cab, firstly open the door completely to locking position and check and ensure that the door can't move further(For machine with cab).



- Face towards the machine, get on/off the footplates, and grab the handrail to support your weight by three-point safety posture (Hands and feet).
- Do not use safety lock handle or any joystick as handrail.

Before starting machine, keep all non-authorized personnel away from this zone

Start the engine only after the safe start is confirmed by checking the following items.

- Walk around the machine and alert the repair personnel and the personnel walking around the machine. Start the engine only after it's confirmed that there is no person around the machine.

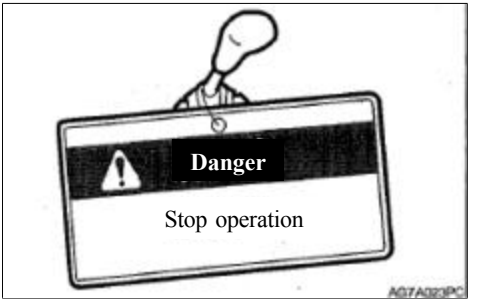

- Check for warning sign "No Operation" or similar sign affixed on cab door, control, or starter switch. If present, do not start engine or touch any joystick.
- Sound the horn to alert the personnel around machine.

Sit in the driver seat and start the engine.



- Adjust the seat till it's securely locked.
- Fasten the seat belt.
- Check whether the parking device is

actuated and all joysticks and pedals are in neutral.

- Check whether the safety lock handle is at locking position.
- Ensure there is no person near the machine.
- Start and operate the machine only in driver seat.

Do not attempt to start the engine by short circuiting the terminals of starter device.

Start by Jumper Cable



Start by jumper cable only as per the recommended method. The improper use of jumper cable will result in battery explosion or unexpected machine motions.

Please refer to "In event of no battery power" to understand more operation description information.

After Start of Engine

After the start of engine, fulfill following operations and checking in a place without personnel or obstacle. Upon detection of any malfunction, stop the engine as per the procedure and report malfunction.

Warm up the engine and hydraulic oil.

Check all instruments and warning devices for normal functioning.

Check for presence ofnoise.

Test the engine speed control.

Operate all control devices to ensure normal functioning.

For Cold Weathers

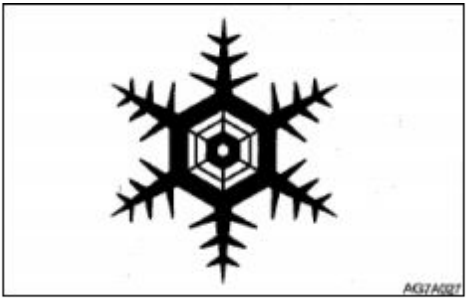

Take cautions that the frozen ground, footplates, and handrails are slip. Under cold weathers, do not touch any metal part of machine by bare hands. Your skin will be frozen on metal part to cause serious injuries.

Do not use diethyl ether or starting fluid on the engine. The starting fluid can cause explosion and serious injuries or deaths.

Warm up the engine and hydraulic oil. Operating joysticks without warm-up will result in slow or inappropriate reaction or movement ofmachine to cause accident.

Operation Precautions

Operating Machine with Maximum Track Width

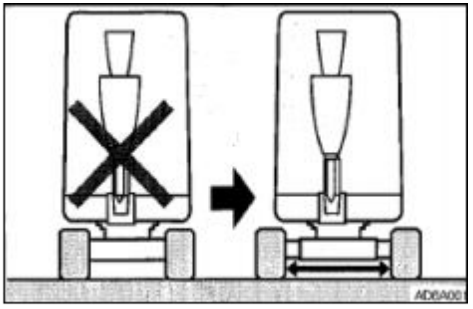

Always operate the machine with extended track width of 1,240mm, in order to improve the machine stability to the maximum extent. Operating the machine with narrow track width (990mm) will probably result in rollover of machine due to poor stability.

If it's necessary to operate the machine with narrow track width (990mm), retract the bucket working device and lower the boom to reduce the gravity center and face the machine towards front before traveling.

Guarantee of Good Visibility

Checking of Visibility before Operations of Machine

During operations in a dark place, turn on the working lamp and headlamp of machine and when necessary install additional lighting devices. In event of poor visibility due to severe weathers (Such as fog, snow, rain, and haze), stop the operations of machine till the visibility turns good.

Clean the windows, mirrors, lamps, and camera to keep good visibility. Adjust the mirrors and camera to optimal positions to ensure that the driver sitting in the driver seat can see the rear view (Blind spot).

The non-authorized modification or the installation of non-approved attachments will probably impair the visibility. The operator's visibility must conform to the requirements of ISO 5006.

No Riding on Machine



All personnel are prohibited to sit on any part of machine at any time during traveling or operations ofmachine.

Checking for Safe and Reliable Working Zone before Operations

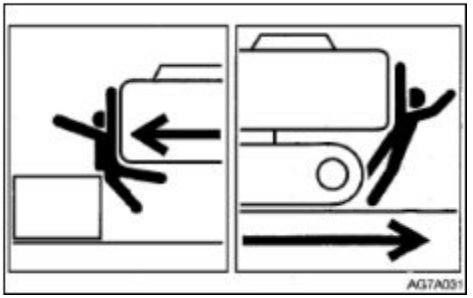

Verify the performance limits ofmachine.

Set up a signaler at the road shoulders, narrow places, or vision-obstructed places.

Do not allow any person to access the turning radius or path ofmachine.

Sound the horn to indicate your movement intention.

There are blind zones behind the machine. Before driving backward, check the safety in the area behind machine and ensure there is no person behind the machine.

Checking of Chassis (Tracks) before Traveling

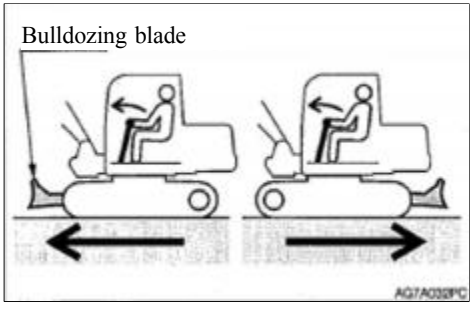

Before operating the traveling joystick/pedal, ensure that the bulldozing blade is in front of the driver seat. Please bear in mind that the operation direction of the traveling joystick/pedal with bulldozing blade behind the driver seat is reverse to that with bulldozing blade in front of driver seat.

Safe Traveling

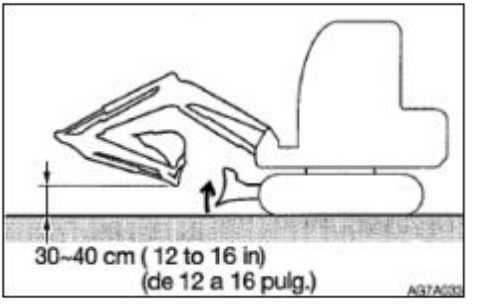

The bulldozing blade shall be lifted during traveling. Retract the bucket working device as shown in above diagram and lift the bucket by 30~40cm offthe ground.

Do not slew during the traveling. If it's necessary to operate the bucket working device during traveling, operate at sufficiently low speed to ensure the complete control at all times.

When the machine is traveling in 2nd gear (High speed) and a load higher than set value is applied, the machine will automatically slow down to 1st gear (Low speed). If the load is

reduced, the machine will accelerate and return to 2nd \ gear (High speed). Please be noted that the traveling speed varies depending on the load condition (For machine with automatic traveling gearshift reducer system).

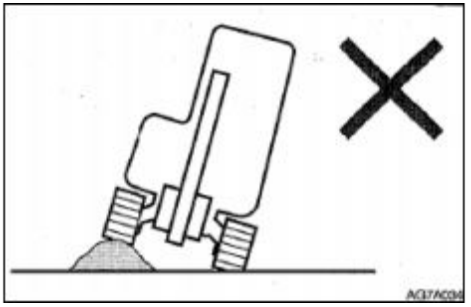

Avoid driving over obstacles whenever possible. If it's necessary to drive over obstacles, keep the bucket operating device near the ground and travel at low speed. Do not drive over any obstacle that will incline the machine by 10°or larger.

On rugged roads, drive the machine at low speed and avoid the sudden startup, stop, and direction change. Otherwise, the working device will probably come into contact with the ground to cause unbalance and damage of machine or destruct the structure in surrounding area.

Precautions for Traveling on Slopes

While traveling on slopes, take cautions to prevent the rollover and gliding ofmachine.

Do not drive the machine on a slope steep enough to cause instability of machine. Please be noted that, in the actual applications, the performances of machine on a slope will be deteriorated due to severe working conditions.

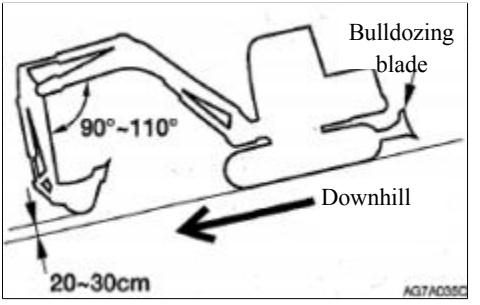

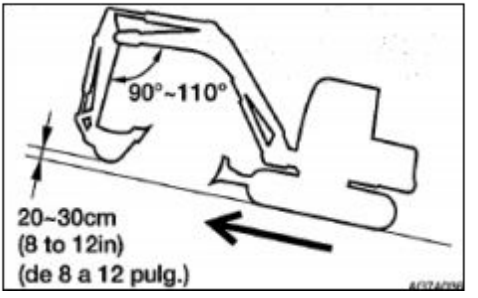

Keep the driver seat facing towards the upslope direction while climbing up a slope. Keep the driver seat facing towards the downslope direction during downslope traveling. In both cases, pay special attention to the ground ahead of the machine during traveling. While traveling on a slope, lower the bucket to 20~30cm off the ground. While climbing up a steep slope, extend the bucket working device

to the front position. In event of an emergency, lower the bucket onto the ground and stop the engine ofmachine.

While traveling on a slope, drive slowly in 1st gear (Low speed). Reduce the engine speed during downslope traveling. Do not reverse the machine down a slope.

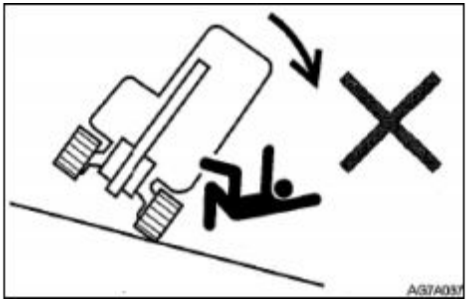

Special Cautions for Operations of Machine on Ice/Snow

While traveling on snowy or icy roads, drive at low speed and avoid the sudden startup, stop, and direction change.

In snowy regions, the road curbs and the roadside objects are buried in the snow to become invisible. In addition, there is a danger of machine rollover or collision with covered objects. Therefore, always operate with cautions.

There is a danger of rollover or snow entrapment while driving the machine into thick snow. Drive with cautions and do not drive over road curbs or entrap in the snow.

For frozen soil surface, the ground becomes soft when the temperature rises, which will probably result in rollover of machine and entrapment ofoperator in the machine.

While parking the machine on a unstable ground, lower the bulldozing blade.

Special Cautions for Operations of Machine on Ice/Snow

While traveling on snowy or icy roads, drive at low speed and avoid the sudden startup, stop, and direction change.

In snowy regions, the road curbs and the roadside objects are buried in the snow to become invisible. In addition, there is a danger of machine rollover or collision with covered objects. Therefore, always operate with cautions.

There is a danger of rollover or snow entrapment while driving the machine into thick snow. Drive with cautions and do not drive over road curbs or entrap in the snow.

For frozen soil surface, the ground becomes soft when the temperature rises, which will probably result in rollover of machine and entrapment ofoperator in the machine.

While parking the machine on a unstable ground, lower the bulldozing blade.

No Movement ofBucket over Personnel

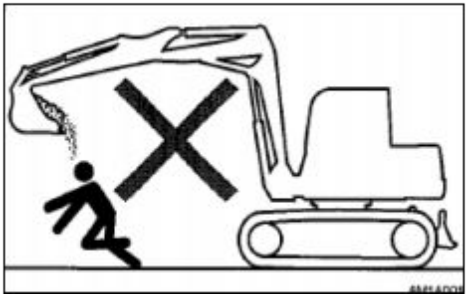

Moving the bucket over the personnel has a danger of splashing of loaded material or the sudden falling of bucket.

Guarantee of Driver's Seafty during Loading

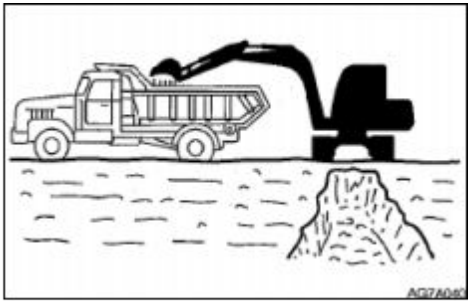

Do not load before the driver reaches a safe place.

Do not swing or position bucket above personnel or cab. Load from the back door of trucks.

Keeping a Safe Distance from Overhead High-Voltage Cables



Never close any part or loaded material of machine to high-voltage cables, unless all safety measures specified by local and national authorities are already taken. There is a danger of electric shock and death when any person approaches to the machine that is discharging electric spark or is near or in contact with power supply.

Always keep a safe spacing between machine and high-voltage cables.

Before starting operations, please verify the relevant operation safety procedures with local power grid.

Consider all electric cables as high-voltage cables. Even if it's known or believed that the power supply is cut off or the cable is clearly grounded, consider such cables also as live cables.

If the machine is too close to high-voltage

cables, set up a signaler to sound warnings. Keep all personnel within operation zone away from machine and loaded material.

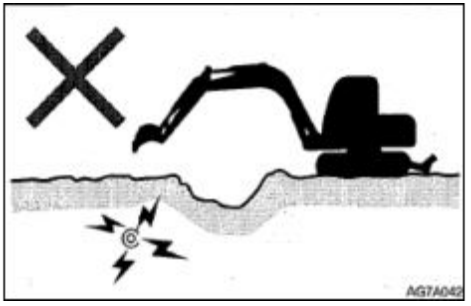

Pay special attention to the underground high-voltage cables.

Close Observation on Dangerous Working Conditions

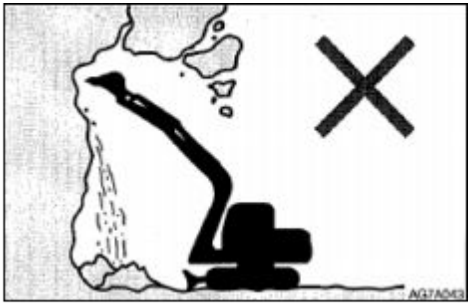

Never dig on the bottom of any high embankment. It's really dangerous because such operation will probably result in surface collapse.

Do not operate in any place with falling stone danger.

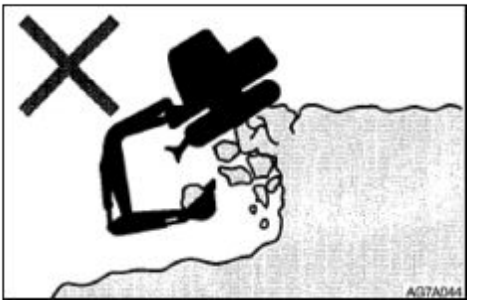

Keep a safe spacing between machine and edge of digging site. Do not dig the ground ahead of machine.

During the operations near a cliff or road curb, to ease the escape in any event, form a right-angle between tracks and cliff or road curb and place bulldozing blade in the front.

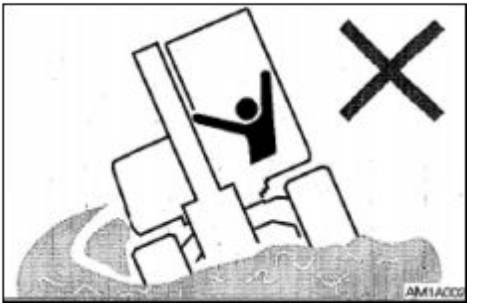

Do not access any soft ground area. This will probably result in inclination of machine due to dead weight to cause rollover or ground entrapment.

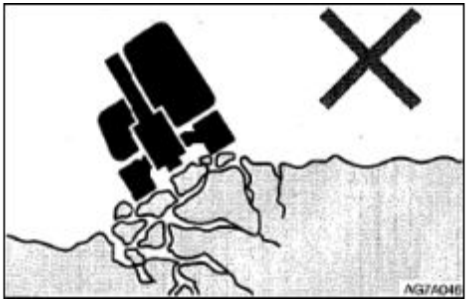

Keep away from unstable ground (Cliffs, road curbs, and deep ditches). If the ground collapses due to machine weight or vibration, there is a possible danger of machine falling or rollover.

Please bear in mind that the soil turns infirm after heavy rain or explosion.
The ground on the top of embankment and the ground around and on top of the dug ditches are also infirm.

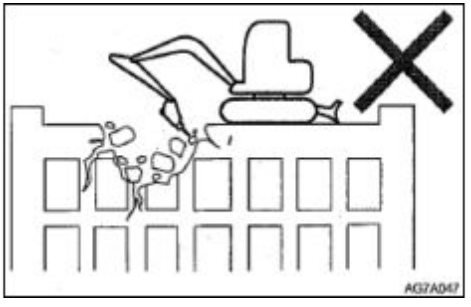

Do not perform demolition operations beneath the machine. There is a possible falling danger of machine when the ground becomes unstable.

Before the operations on the top of any building or other structure, check the strength and structure. It will cause serious harms or destructions if the building or structure collapses.

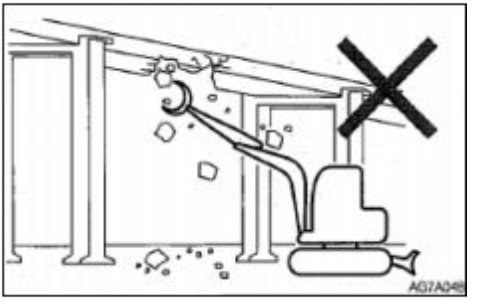

Do not perform demolition operations above your head. There is a falling damage of damaged parts or collapse danger of building to cause serious harms or destructions.

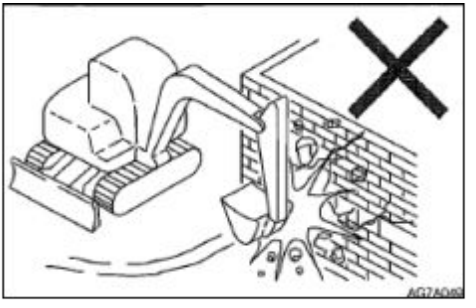

Do not perform the demolition operations by the impact force of bucket working device. The splashed material fragments and the damaged bucket working device have a danger of serious

harms.

Danger during Operations on Slopes

During operations on slopes, slewing or operating the working device can probably result in instability or rollover of machine. Avoid operations on slopes whenever possible.

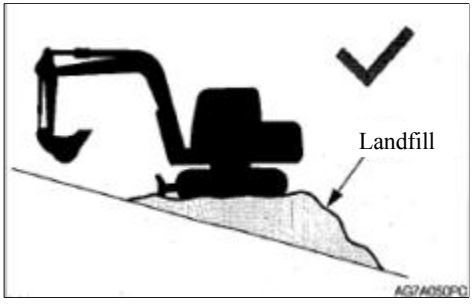

Leveling operation zone

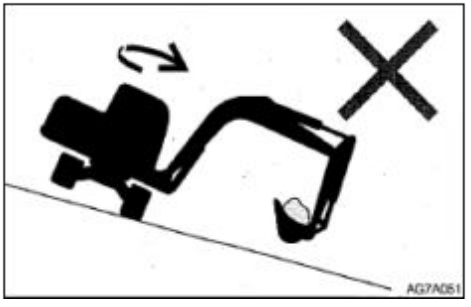

If the bucket is fully loaded with material, avoid slewing towards the downslope direction. Otherwise, it will deteriorate the machine stability and probably result in rollover.

No Lateral Slewing (Swing) with Bucket Heavily Loaded

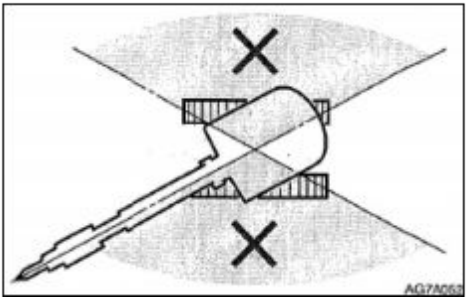

The machine is more vulnerable to rollover in lateral direction than longitudinal direction.

Do not laterally slew (swing) when the bucket working device is heavily loaded. Especially, do not laterally slew (swing) on a slope.

When the machine is equipped with breaking hammer, grinder, or extended bucket arm, the attachment end is heavier than that with standard bucket. For machine with such heavy end, do not face the bucket arm (boom) towards downslope direction for digging or towards lateral direction for operations.

Guard against Overhead Objects

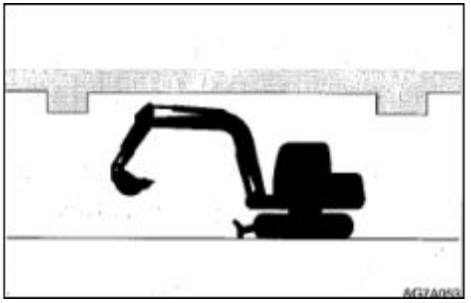

During operations under bridges, in tunnels, near cables, or indoors, guard the boom and bucket arm against impact with any overhead object.

Not Designed for Lifting Application

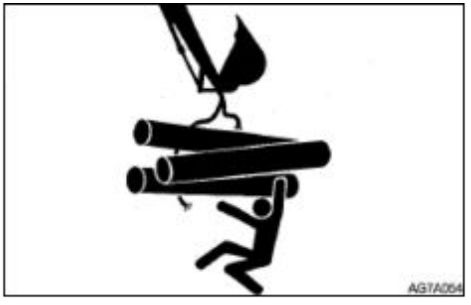

This machine is specially designed for digging operations. Therefore, it's not installed with safety devices for lifting operations. Take special cautions while using this excavator for lifting operations.

Do not overload during lifting. The overload will result in rollover of machine to cause serious injuries or deaths.

All rated lifting capacities are based on the condition of using this machine on a firm and level ground. The user's is recommended to reserve an appropriate allowance for specific working conditions, in order to ensure the safe lifting operations. The soft or uneven ground, non-level status, lateral load, dynamic or sudden load, dangerous environment, and personnel experience are included. Before operating the machine, the operation personnel and other personnel shall be really familiar with the Operation Manual. The safe operation regulations of the machine shall be strictly followed in all cases.

If the chain or lifting device is incorrectly connected, the bucket connecting rod or the lifting device will probably fail to cause serious injuries or deaths.

While using this machine as a crane, do not attempt to pull out a stump from the ground. For this application, the load applied onto the machine is completely unknown.

Do not allow any person to stand on or beneath the lifted object or close to the operation zone.

Guard against Flying Objects

This machine is not installed with any protective device to guard the operator against the harms of flying objects. Do not operate this

machine in any dangerous place in which the operator is probably subject to the impact of flying objects.

Precautions for Towing

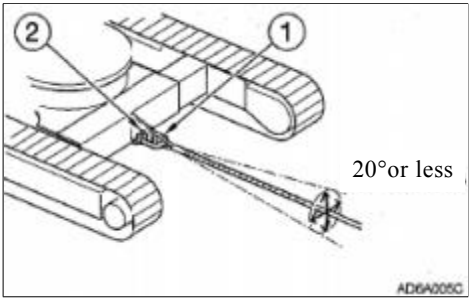

During towing, the improper operations, the incorrect use of rope, or the improper checking will cause serious injuries or deaths.

The breakage or cracking of rope can cause danger. Use wire ropes compatible with the towing force.

Do not use any kinked, twisted, or even damaged rope.

Do not suddenly apply heavy load onto the rope.

Please wear safety gloves during the handling ofrope.

Ensure that an operator is assigned each on the towing machine and the towed machine.

Do not operate the towing operation on a slope.

Keep all personnel away from the rope during towing.

Please refer to the section “Towing” to understand more description information.

Precautions for Parking

Safe parking

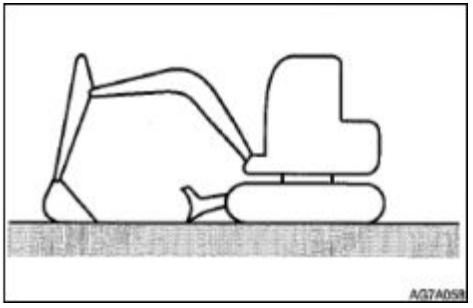

- Stop the machine on a level, solid, and safe ground. Set the parking device.

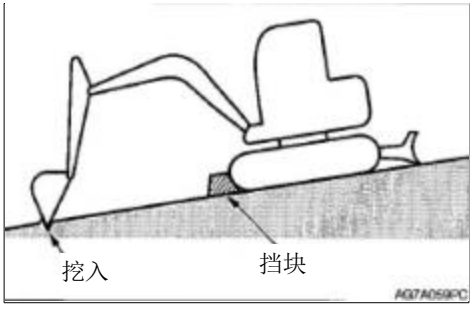

- If it's necessary to park the machine or tilt the machine on a slope, securely park the machine and block the machine against movement.

  While parking the machine in a street, use gratings, warning signs, or lamps to keep the visible even in the night, in order to prevent the impact with other vehicles.

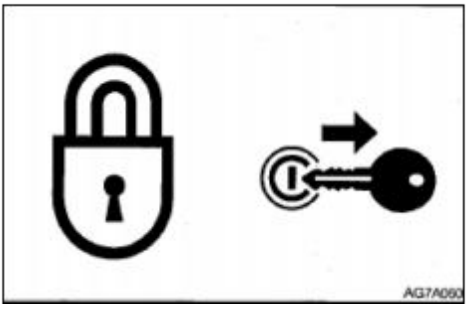

- Complete the following operations before leaving the machine:

  Lower the bucket and bulldozing blade onto the ground.

  Lift up the safety lock handle to the locking position.

  Stop the engine and withdraw the starter key.

  Lock the cab and hood and carry the key with you.

Precautions during Transport

Safe loading/unlocking ofmachine

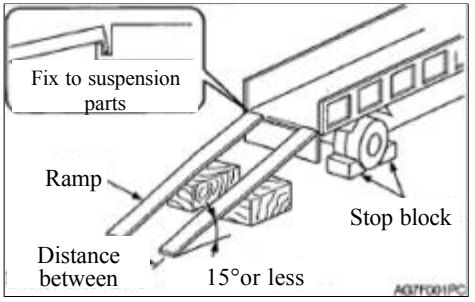

The machine will probably roll over or fall off during loading and unloading. Ensure to take the following safety measures:

Select a solid and level ground and keep a sufficient spacing from the road curb.

Fix the ramps of sufficient strength and dimensions to the cargo body of truck. The inclination of the ramps shall not exceed 15°. If the ramps deflect downward excessively, please support the ramps by supports or cushion blocks.

Do not load or unload the machine by working device. Otherwise, it will probably result in rollover or falloff ofmachine.

Keep the truck cargo body and the ramps clean without oil, sand, ice/snow, or other impurity, in order to prevent the sideslip of machine. Clean the tracks.

Block the wheels of transport truck by wedges to prevent movement. While loading or unloading the machine, drive the machine slowly in 1st gear (low speed) as per the signals ofthe signaler.

Do not change direction on ramps.

Do not slew/swing on ramps. Otherwise the machine will probably roll over.

Slewing (swinging) the machine on the cargo body of truck will probably result in unstable legs ofmachine. Therefore, operate slowly.

If possible, lock the cab doors after loading. Otherwise the cab doors will probably open during the transport.

Plug securely the tracks by wedges and then fix the machine to the truck cargo body securely by ropes or chains.

Safe Lifting of Machine

Master and utilize the correct lifting gestures.

Daily check the lifting device for damaged and missing parts and when necessary replace.

Please use the ropes of sufficient capacity for the machine weight during lifting.

Lift the machine as per the procedure described below. Do not operate by any other method, otherwise it will probably result in unbalance of machine.

Please refer to the section “Lifting of Machine” to understand more description information.

Do not operate the lifting if there is any operator on the machine.

Operate slowly during lifting to prevent the rollover ofmachine.

During lifting, keep all personnel away from working zone. Do not move the machine over any person.

Safe Transport of Machine

During the transport of machine, understand and abide by all applicable safety rules, vehicle codes, and traffic regulations.

Take the length, width, height, and weight of the transport truck with loaded machine into consideration, in order to select the best transport route.

During the transport, do not start up or stop the transport truck suddenly or drive at high speed. Otherwise, it will result in movement or unbalance of loaded machine.

Precautions for Maintenance

Warning Information of "No Operation" Sign

During the checking or maintenances of machine, the start of engine or the touch of any joystick by non-authorized personnel will probably result in serious injury accidents.

Before maintenances, please stop the engine and withdraw and carry the key.



Affix warning information "No Operation" to an eye-catching place such as starter switch and joystick.

Use of Correct Tools

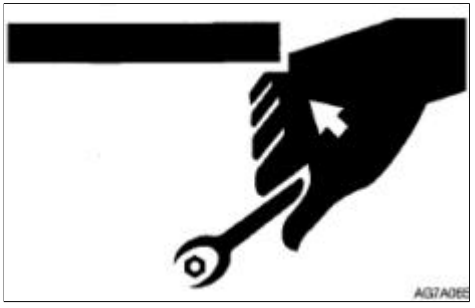

Do not use any damaged or deteriorated tool or any tool designed for other application. Use tools suitable for related operations.

Periodically Replaced Critical Safety Parts

Replace the fuel hoses periodically. The fuel hoses will wear gradually along with time, even ifno wear symptom is visible.

Upon detection of any wear symptom, replace the fuel hose, regardless of the replacement schedule.

To understand more details, please refer to the section "List of Critical Safety Parts".

Explosion-Proof Lamps



While checking the fuel, lubricating oil, coolant, and battery electrolyte, please use explosion-proof lamps to prevent fire and explosion. Otherwise, it will probably result in explosion to cause serious injury accidents.

No Access of Non-Authorized Personnel

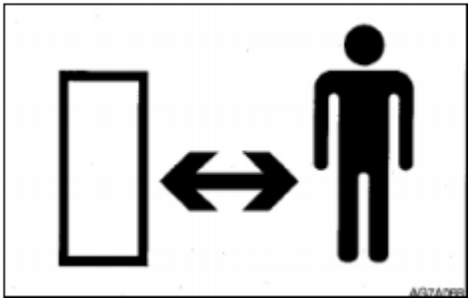

During operations, the non-authorized personnel are prohibited to access the working zone. Take cautions during grinding, welding, and use of hammer. You will probably be injured by the flying fragments from the machine.

Preparations of Working Zone

Select a stable and level working zone. Ensure the appropriate illumination conditions. For indoor operations, keep well ventilated. Remove obstacles and dangerous goods. Clear slippery areas.

Always Keeping Clean Machine

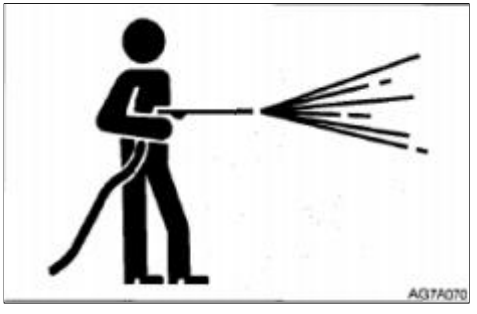

Please clean the machine before maintenances. Stop the engine before cleaning the machine. Cover the electric parts against water ingress. The water ingress into the electric parts will probably result in short-circuit or malfunction. Do not clean the battery, electronic control units, sensors, connector, or cab by water or steam.

Stop of Engine before Maintenances

While the machine is working or the machine is not working but the engine is running, avoid lubricating or further adjusting the machine.

If the maintenance requires the running of engine, assign two operators for teamwork and keep contact with each other.

One operator must sit in the driver seat to get ready to stop the engine immediately when necessary. This operator must pay special attention not to touch any joystick or pedal, unless it's absolutely necessary.

The other operator for the maintenance must keep the body and clothing away from motion parts ofmachine.

Keeping Away from Motion Parts

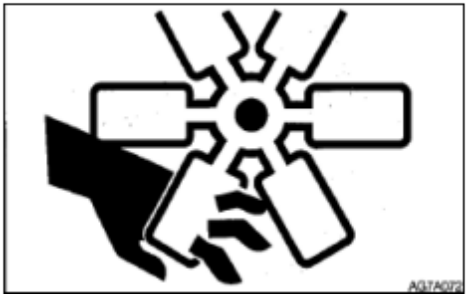

Keep away from all rotating and motion parts. The entanglement of hands or tools into rotating or moving parts will probably cause accidents of serious injuries or even deaths.

The tools or other objects fallen or inserted into the fan or fan belt will be crushed or cut. Never throw or insert any object into fan or fan belt.

Secure Fixing of Machine and Possibly Falling Parts



Before the maintenances or repairs beneath the machine, lower all movable working devices onto the ground or lowest position and fix the tracks.

If it's necessary to operate beneath the lifted machine or device, always fix by cushion woods, jack, or other firm and stable supports. Do not access the area beneath the machine or working device before it's firmly supported. This operation is especially important for the hydraulic cylinder operations.

Fixing of Working Device

During the repairs and replacements of bucket teeth or side teeth, to prevent the accidental movement ofmachine, securely fix the working device.

Steady Placement of Opened Engine Hood and Cover

Before operations within the machine, please securely fix the engine hood or machine hood. Keep the engine hood or cover closed under windy weather or while parking the machine on a slope.

Placement of Heavy Weights at Steady Place

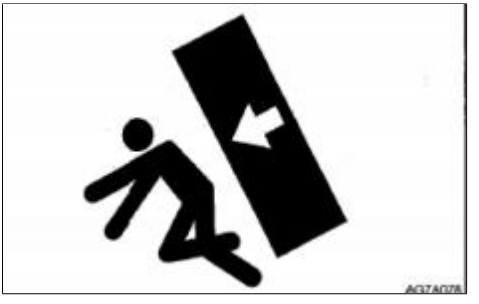

If it's necessary to place temporarily heavy

weights or attachments onto the ground during disassembling or installation, please ensure to place them in a steady place. Keep the non-authorized personnel away from the place for storage of such objects.

Precautions for Refueling



The smoking and open fire are prohibited during refueling and near the refueling point.

Do not disassemble the fuel tank cap or refuel while the engine is running or is not cooled down. Do not splash fuel to any high temperature surface ofmachine.

Refuel the fuel tank in a well-ventilated place.

Do not top up the fuel tank. Leave an expansion space for the fuel.

Any overflown fuel shall be wiped away immediately.

Tighten the fuel tank cap securely. If the fuel tank cap is missing, replace with original cap only. The use of non-authorized fuel tank cap with poor ventilation will cause internal pressure in the fuel tank.

Do not use fuel for any cleaning purpose.

Use correct fuel grade based on the season.

Handling of Hoses

The leakage of lubricating oil or fuel can result in fire accident.

Do not distort, bend, or impact any hose.

Do not use any distorted, bent, or cracked pipeline, metal pipe, or hose, otherwise it will probably result in burst.

Re-tighten any loose connector.

Absolution Caution during Handling of High Temperature and High Pressure Parts



Please stop the engine and wait for the machine to cool down before maintenance.

The engine, exhaust pipe, radiator, hydraulic pipes, sliding parts, and many other machine parts are really hot when the engine is just stopped. Touching such parts can cause scalding.

The engine coolant, hydraulic oil, and other

fluids are also under high temperature and high pressure status.

Take cautions not to touch the hydraulic oil while loosening engine hood or connector. Operating the machine under such condition will cause out-spray of hot oil to result in scalding or injuries.

Absolution Caution during Handling of High Temperature and High Pressure Parts



Do not disassemble the radiator cap or drainage plug when the coolant is hot. Stop the engine and wait for the engine and coolant to cool down. Slowly loosen the radiator cap to relieve the internal pressure and then take it out.

Caution against Internal Oil Pressure

Take caution against internal oil pressure. After the stop of engine, the pressure in the hydraulic oil pipes can hold for a long time.

Before the maintenances, thoroughly relieve the internal pressure.

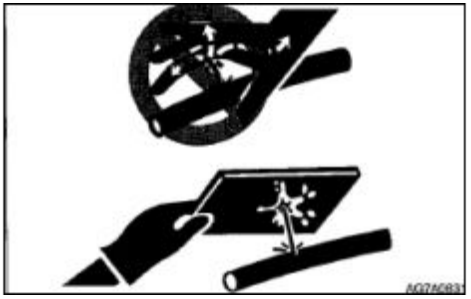

The high pressure of hydraulic oil can penetrate skin and eyes to cause serious injuries and blindness or even death. Please bear in mind that the hydraulic oil permeating from orifices is nearly invisible to naked eyes. While checking for leakage, wear goggles and thick gloves and protect the skin by paper boards or plywood to protect against the harms of spraying hydraulic oil.

The hydraulic oil penetrating into your skin must be cleared by a doctor familiar with such injuries with surgical method within several hours.

Pressure Relief before Operations of Hydraulic System

Disassembling cap or filter or disconnecting pipeline before the pressure relief of hydraulic system will probably result in out-spray of hydraulic oil.

- Slowly loosen the bleeding plug to relieve the pressure of oil tank.

- While disassembling connector or plug or disconnecting hose, stand on one side, loosen slowly to gradually relieve internal pressure, and then take out.
- The engine oil or oil plug will probably spray out under the internal pressure of traveling motor oil tank. Please slowly loosen the oil plug to relieve the internal pressure.

Guard against Splashed Fragments during Use ofHammer

During the use of hammer, the pins and the metal fragments will probably fly out. It will probably cause serious personal harms.

- While hammering hard metal parts such as pins, bucket teeth, side teeth, and bearings, please wear protective articles including goggles and gloves.
- While hammering pins and bucket teeth, ensure there is no person in surrounding area.

Guard against High Pressure Grease

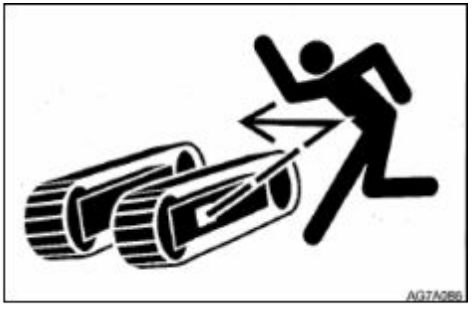

In the track tensioner, the grease is injected under high pressure. If the tension is not adjusted by the following designated procedure, the grease relief valve will probably fly out to cause injuries.

- Never loosen the grease pipe fittings.
- Slowly loosen the grease relief valve. Do not rotate it for >1 turn.
- Do not place your face, arms, legs, or body in front ofthe grease reliefvalve.
- If no grease flows out when the grease relief valve is loosened, the valve is malfunctioned. Please contact a Kenstone Heavy Machinery service dealer for repairs.

No Disassembling of Track Tensioner

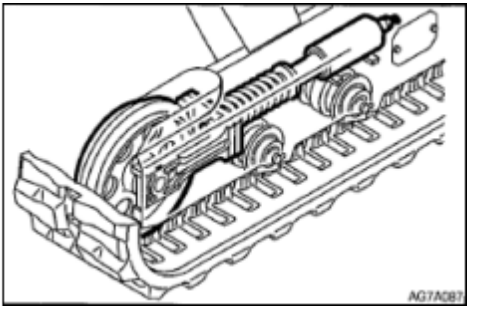

The track tensioner is installed with a high strength spring. If the track tensioner is disassembled carelessly, the spring will spring out to cause serious injuries. Do not disassemble the track tensioner.

Operations of Additional Devices



Take special cautions while handling the high pressure nitrogen stored in the tank. The improper handling will probably result in explosion of nitrogen to cause serious injuries. Please strictly abide by the following safety measures:

- Do not break up or disassemble.
- Keep away from open fire and fire source.
- Never drill hole, weld, or melt.
- Guard against physical vibration, such as hammering, rolling, and falling.
- Bleed the sealed air before handling the cylinder body. If you need help, please contact a Kenstone Heavy Machinery service dealer.

Disconnection of Battery Cables



Please disconnect the battery cables before operations or electric welding of electronic system. Firstly disconnect the negative (-) cable of battery. During reconnection, finally connect the negative (-) cable of battery.

Caution during Handling of Battery

- The battery contains sulfur acid. The accidental touch will harm your eyes or skin.

  In event of accidental contact with eyes, immediately flush by clean water and quickly seek for medical treatment.

  In event of accidental swallowing, drink a lot of water or milk and immediately seek for medical treatment.

  If the sulfur acid comes into contact with your skin or clothing, immediately flush by a lot of water.
- Wear goggles and gloves during handling of battery.

- The battery can generate inflammable hydrogen to probably cause explosion. Keep away from fire sources including open fire, spark, and ignited cigarette.
- Use a flashlight to check the electrolyte level.
- Ensure to turn off the starter switch and stop the engine before checking or handling battery.
- Never touch the electrodes by any metal tool or object, in order to prevent short-circuit.
- The loose electrodes can generate electric spark. Ensure to tighten any loose electrode.
- Ensure that the battery cover is securely covered.
- If the battery is frozen, do not charge the battery or attempt the jumper start of engine, otherwise it will probably cause explosion. Before use, heat the frozen battery to 15°C.
- Do not use the battery when the electrolyte level is below the lower limit. Otherwise it will speed up the internal aging and shorten the life of battery. In addition, it can lead to burst (explosion).
- Do not fill the distilled water till the level is above the upper limit. Otherwise the electrolyte will leak out. The contact with such electrolyte can harm your skin or corrode the machine parts.
- Clean the surrounding area of electrolyte level marking by a wet cloth and check the level. Do not clean by a dry cloth, otherwise it can cause electrostatic accumulation and combustion or explosion.

Periodically Replaced Critical Safety Parts

- To guarantee the safe operation ofmachine for a longer time, add the oil and fulfill the checking and maintenances periodically. To promote the safety, periodically replace the critical safety parts, including hoses and seat belts. To understand more details, please refer to the section “Periodically Replaced Critical Safety Parts”.
- “Periodically replaced critical safety parts” refers to the parts aged, worn, and functionally deteriorated after repeated use. The performances of such parts will change along with time. These characteristics of such parts can cause serious mechanical damages or personal harms and the remaining lives of such parts can’t be judged by merely appearance checking or operation hand-feel.

- Upon detection of any visible damage on the appearance, please replace the "periodically replaced critical safety parts", even if the designated replacement period is not reached.

Jumper Start with Battery Charging Cable

- To start the engine by battery charging cable, ensure to connect the cable correctly as per following procedure. The incorrect connection of cable can cause discharging and battery explosion.
- Keep the "Malfunctioned machine" and "Rescue machine" away from mutual contact.
- Never touch the positive (+) and negative (-) electrodes of battery charging cable with each other or with the machine.
- During connection, firstly connect the positive electrode of battery charging cable to positive (+) terminal. During disconnection, firstly disconnect the negative (-) terminal (grounding terminal) from the negative cable.
- Ensure to connect the cable clamps securely.
- Connect the last clamp of battery charging cable to a place as far as possible from the battery.
- To start the engine with battery charging cable, always wear goggles and gloves.
- Use the battery charging cable and clamps of dimensions suitable to the battery capacity. Never use damaged or corroded battery charging cable or clamps.
- Ensure that the battery capacity is same for the "Malfunctioned machine" and "Rescue machine".

Asking Kenstone Heavy Machinery Service Dealer for Welding Repair

The welding operations, if necessary, must be fulfilled by competent personnel in a working site with complete equipment. To prevent damaging any machine part by over-high current or electric spark, please abide by the following precautions.

- Disconnect the battery cables before electric welding.
- Do not apply 200V or higher voltage continuously.
- Connect the grounding point within 1m reach from the welding area. Do not connect the grounding terminal near the electronic control device/instrument or connector.
- Ensure there is no seal ring or bearing between welding area and grounding terminal.
- Do not connect the grounding terminal to

the any place near the working device pin or hydraulic cylinder.

- Before the welding of machine body, disconnect the connector of electronic control device.

Vibration Applied on Operator

According to the results of the test on the vibration transmitted from the machine to the operator, the vibration applied on the operator's upper limbs is $<2.5m/s^2$ and the vibration applied on the operator's body in the seat is $<0.5m/s^2$.

Checking after Maintenance

- Accelerate the engine speed slowly from low idling speed to fastest speed and check for leakage of oil or water from repaired parts.
- Operate all joysticks and check machine for normal operations.

Waste Disposal

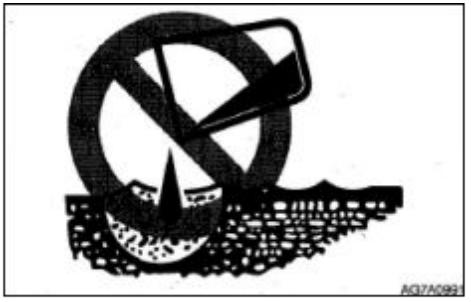

- Ensure to collect the drained oil of machine into a container. The improper treatment of waste oil will pollute the environment.
- While disposing harmful objects, including lubricating oil, fuel, coolant, solvent, filter, and battery, please abide by the applicable laws and regulations.

Disposal of Harmful Chemicals

The direct contact with harmful chemicals will cause serious harms. The harmful chemicals used in this machine include oils/greases, battery electrolyte, coolant, paint, and adhesive. Please dispose the harmful chemicals carefully and properly.

Safety Signs (Markings)

To guarantee the safety of operator and operation personnel in the working zone, please set up the following safety signs (markings) at some portions of machine. Walk around the machine with this manual and observe the contents and placement locations of these safety signs. Please review these signs and operation instructions contained in this manual jointly with the machine driver.

- The safety signs shall be clean, clear, and easily legible. If any safety label falls, is damaged, or becomes illegible, please replace with new one. Please provide your product serial number while ordering new signs from a Kenstone Heavy Machinery service dealer.
- If a part/body on which a safety sign is affixed is already replaced, affix a new sign to new part/body.

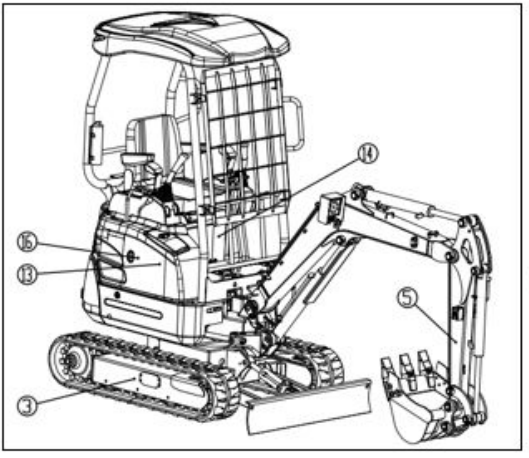
14
16
13
5
3

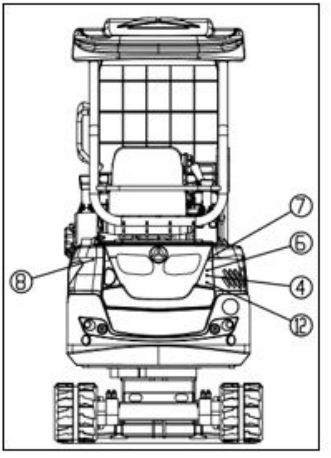
7
6
8
4
12

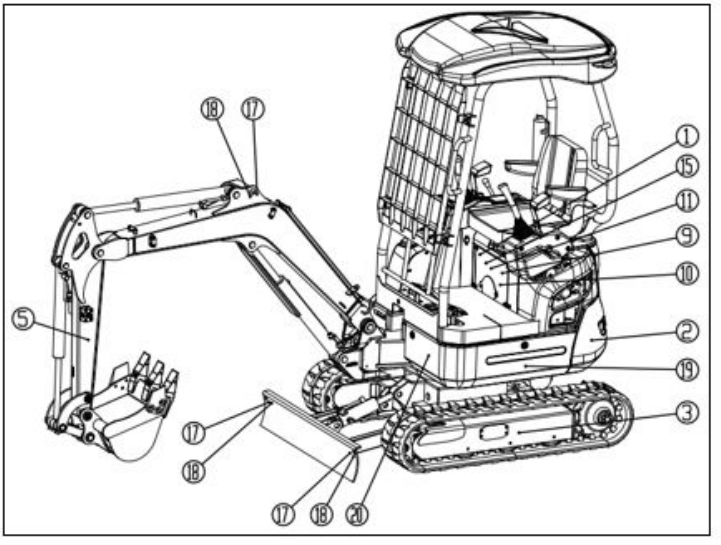
18
17
1
15
11
9
10
5
2
19
3
17
18
17
18
20

1. Warning

Carefully read and understand the manual before operations, checking, and repairs of machine.

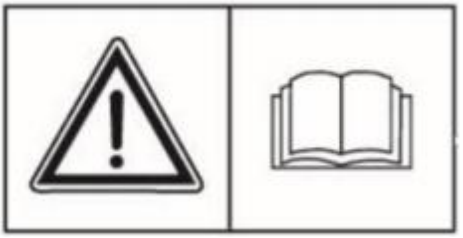

2. Safe distance.

Never approach to or stand in the working zone of machine.



3. Danger from underbody bolts thrown from track roller adjuster. To guarantee the safe and correct operations, ensure to read the operation manual before adjusting the track roller adjuster.



4. Risk from rotating parts. Please turn off before checking and maintenances.



5. Safe distance and danger from collision with working device. Please keep away from machine during operations.





7. This sign indicates that getting involved in the steering belt poses a risk of injury. Make sure it stops rotating completely when performingmaintenanc e or repair work.



8. This sign indicates that if the radiator or hydraulic tank is opened when it is not cooled, there may be a risk of burning due to the hot water or oil emitted. Allow the radiator or hydraulic tank to cool before opening the cover.

these parts, including engine, pump, and exhaust pipe dow

6.



This sign denotes not to touch any hot part during operations or just after operations. Do not touch before

9. Take special cautions while driving over a slope or during operations on rugged road. If the lateral angle is >10°, the machine will roll over. During the operations of machine, always adjust the tracks to the outer position. The inner position of the tra

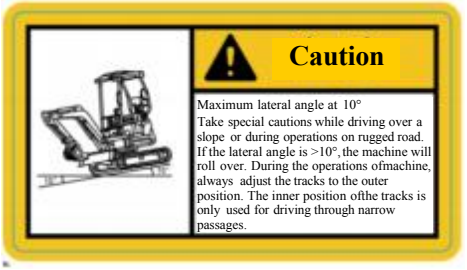

10.

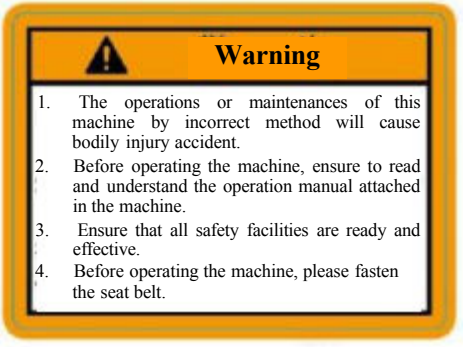

11.

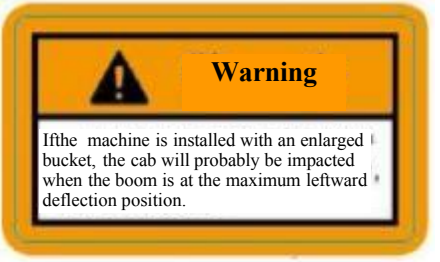

12.



13. Diesel



14.



It's prohibited to touch any joystick or traveling joystick while getting on or off the machine, otherwise the parts will be damaged.

15.



Electric shock risk. There is a danger of electric shock during operations of cables.

16. Hydraulic oil

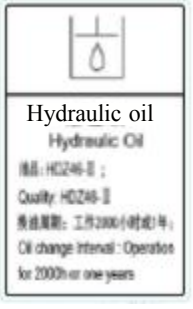

17. Fixed point



18. Lifting direction



19. Safety measure for lifting of machine. When the machine is lifted, fix it by cushion blocks or supports. Do not operate beneath the lifted machine when the machine is not fixed by any support.

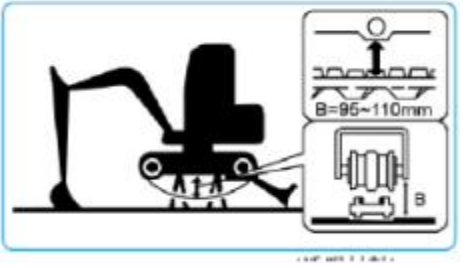

20. Keep the boom and bulldozing blade separated. While lowering the boom,

take cautions not to touch the boom with bulldozing blade.



Controls 

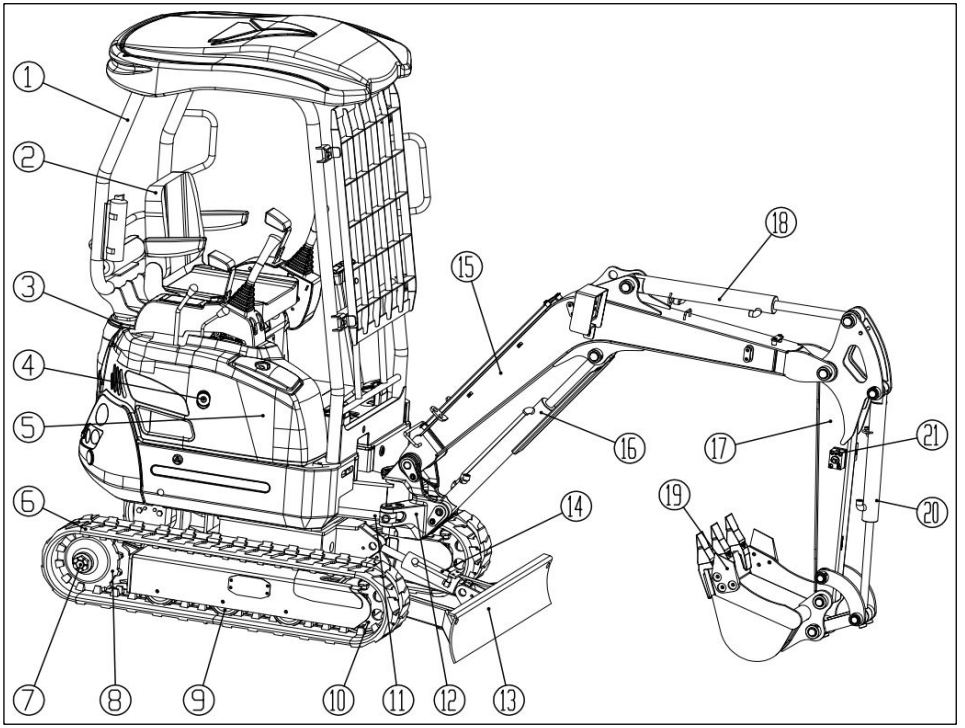

Top frame

1. Top cover
2. Seat
3. Engine hood
4. Hydraulic oil tank
5. Fuel tank

Lower frame

6. Tracks
7. Traveling motor
8. Drive wheel
9. Track roller
10. tension wheel

Working device

11. Head cylinder
12. Turning wharf
13. Bulldozing blade
14. Bulldozing blade cylinder
15. Boom
16. Boom cylinder
17. Bucket arm Steering ball joint
18. Bucket arm cylinder
19. Bucket
20. bucket cylinder
21. Auxiliary hydraulic pipeline

2-2

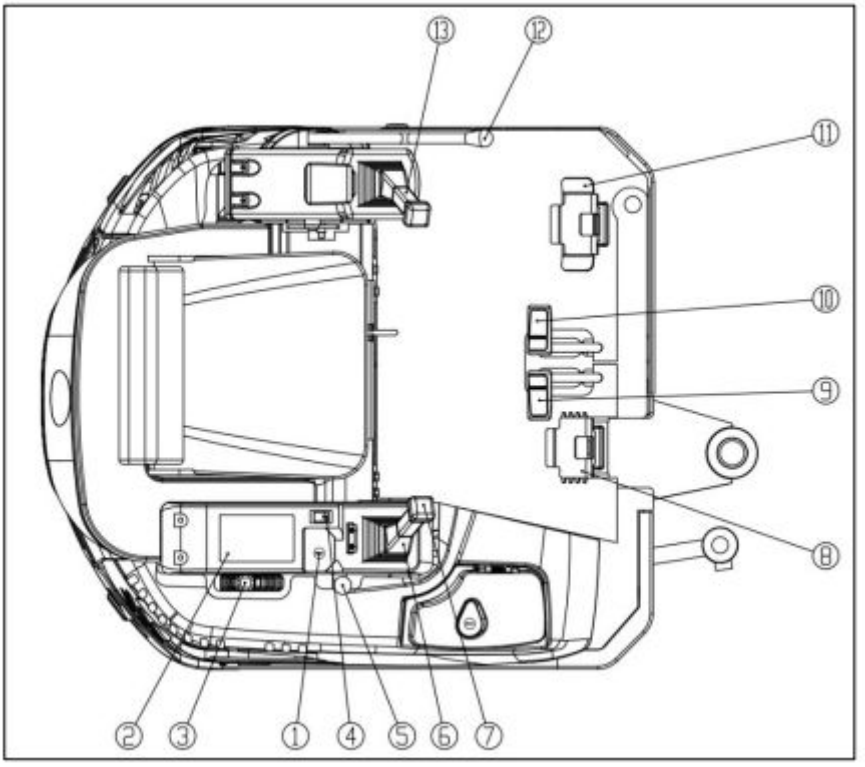

1. Starter switch
2. Electric control panel
3. Bulldozing blade joystick
4. Lighting switch
5. Accelerator joystick
6. Right joystick
7. Horn button
8. Swing boom pedal
9. Right travel handle
10. Left travel handle
11. Auxiliary hydraulic pedal
12. Safety lock handle
13. Left joystick

The specific configuration depends on the machine specification or selected product.

Starter Key



The starter key is used to start the engine.

Access Panel

Caution

Before opening the access panel, ensure that the safety lock handle is at locking position and the engine is stopped.

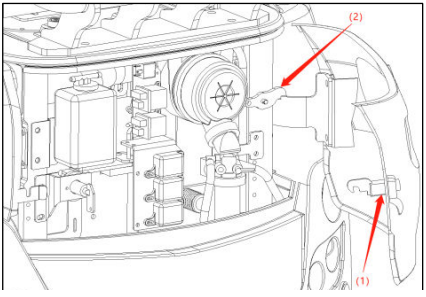

Opening

1. Insert the key and rotate counter-clockwise to unlock the access panel (1).

2. Hold down the lock core, hook the lock handle with your finger, and turn the rear access cover outwardly.

3. Turn the clamp plate (2) counterclockwise so that it snaps into the hinge limit clamp slot.

Closing

1. Manually lift the plate (2) to remove the limit plate from the slot.

2. Rotate the rear access cover inward. When you hear a "click" sound, it indicates that the rear access cover is closed in place.

3. Insert the key and turn counterclockwise to lock the rear access cover (1).

Fuse Case

This case is functioned to protect the electric system against over-current.

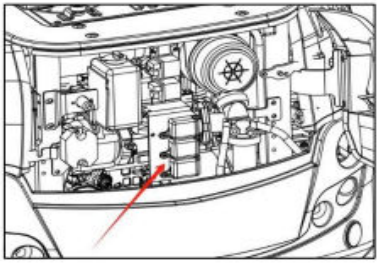

Opening

1. Open rear access cover.
2. Pull the fuse cover while pushing the latch next to the fuse cover.

Closing ;

1. Push the fuse cover in until the latch
2. Close the rear access cover.

Opening the **Side Gate**

This side gate is functioned to ease the repairs of side gate parts and the maintenance of battery

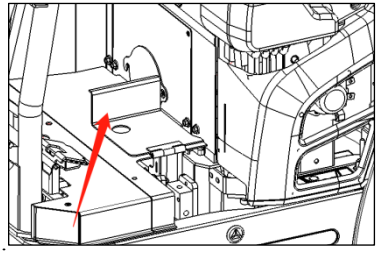

1. Before opening the side gate, uplift the rubber mat of the front platform
2. Then open the small cover of the foot pedal here;
3. Open rear access cover
4. Loosen the butterfly nut (without removing it) and turn the locking bolt upward until the bolt is completely free from the side door limit slot;
5. Gently open the side door

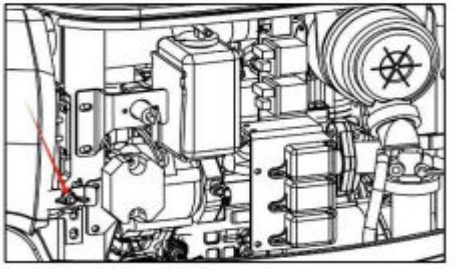

Closing:

1. Push the left door inward;
2. Clamp the locking bolt into the limit slot of the side door and tighten the butterfly nut;
3. Close the rear access cover;
4. Close the foot pedal small cover;
5. Cover the pads.

Front access cover

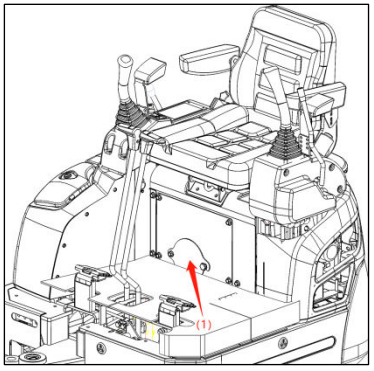

Opening:

1. Turn counterclockwise to loosen the fixing bolt (2);
2. Turn counterclockwise to loosen the fixing bolt (3);
3. Turn counterclockwise to open front access cover (1).

Closing:

1. Turn clockwise to close the front inspection cover plate (1);
2. Turn the fastening bolts clockwise (2), (3)

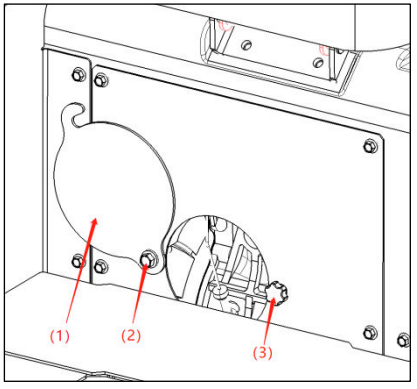

Seat bracket/upper access cover

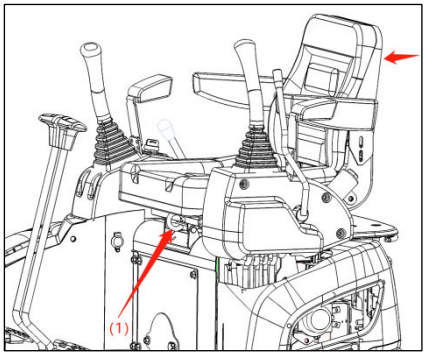

1. Hook the seat limit bar (1) with your fingers and pull forward forcefully while holding the back of the seat and turning the seat forward.

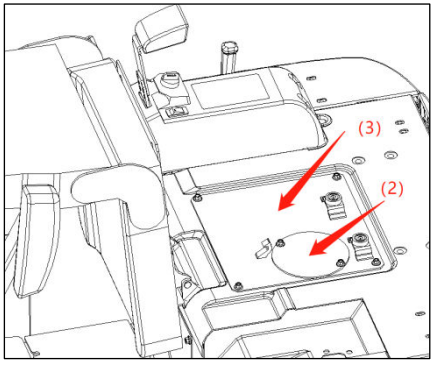

2.Remove the upper maintenance cover plate by turning the two fixing bolts of the upper maintenance cover plate (2) counterclockwise. After removing the upper maintenance cover plate, the coolant can be added.

3.The seat bracket can be removed by turning the four fixing bolts of the seat bracket (3) counterclockwise. After removing the seat plate, you can add coolant and oil.

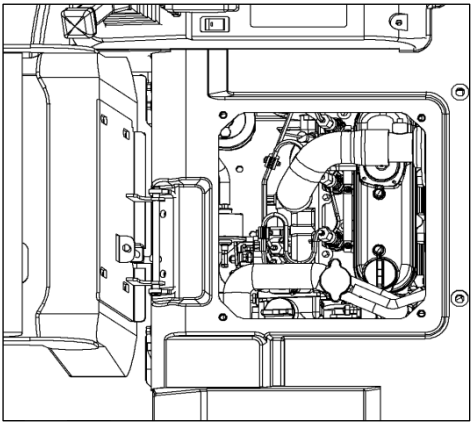

Closing:

1. Install the seat support plate/upper maintenance cover plate and tighten the fixing bolts clockwise;
2. Hand the seat, flip seat back slowly, until he heard a "clicking" sound, the seats have been limit lever lock. At the same time, please check and confirm that the seat can no longer move.

Fuel Tank Cap

Caution

While opening and closing the fuel tank cap, guard your hands against being pinched by the fuel tank cap.

Please open this cap for refueling.

Opening

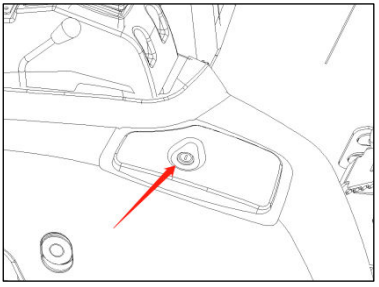

1. Insert the key and rotate counter-clockwise to unlock the fuel tank cap.

Fuel filler port

Warning

- During the refueling into the fuel tank, keep away from heat source and open fire and do not smoke.
- Refuel the fuel tank in a well-ventilated place. Stop the engine before refueling.
- Any overflown fuel shall be wiped away immediately.
- Do not top up the fuel tank. Leave an expansion space for the fuel.
- Tighten the fuel tank cap securely.

Opening

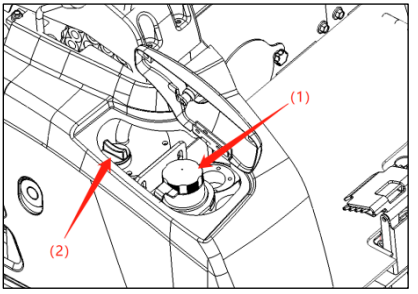

1. Open the fuel tank cap.
2. Rotate fuel tank cap (1) counter-clockwise to disassemble it.

Closing

1. Rotate the fuel tank cap clockwise to close it.
2. Close the fuel tank cap and lock it

Seat and Seat Belt

Seat

Warning

Adjustment and Fixing of Seats (For high-end seats only)

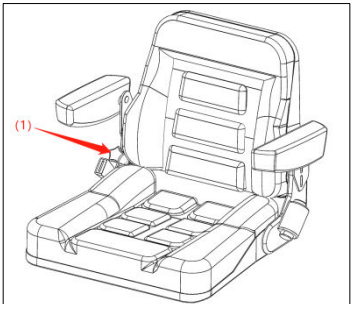

(A) Backrest angle adjustment

1. Sit uprightly against the seat.
2. Use the rotary handle (1) to adjust the backrest to desired angle.

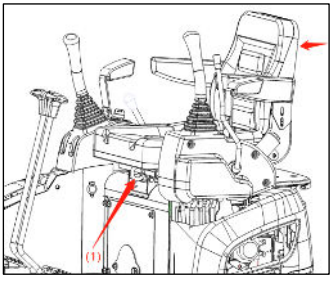

(B) Seat flip

Opening:

1. Manually pull the handle forward (1).
2. Flip the seat forward.

Closing:

1. Hold the handle when it is closed, and release the handle when the seat is flat.

Seat Belt

⚠ Warning

Before starting the engine, please ensure to securely fasten the seat belt.

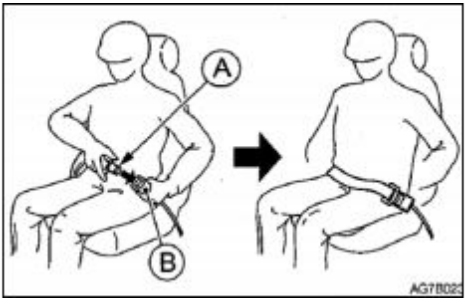

1. Adjust the seat to your desired operating position, sit uprightly in the seat, and lean backward your body.

2 Pull the seat belt to required length.

3. Ensure that the seat belt is not kinked and insert the seat belt tab (A) into the buckle (B), till a click sound is heard to indicate the secure locking.

4. Please pull the seat belt to check for secure locking and place the seat belt around your waist.

Release of Seat Belt

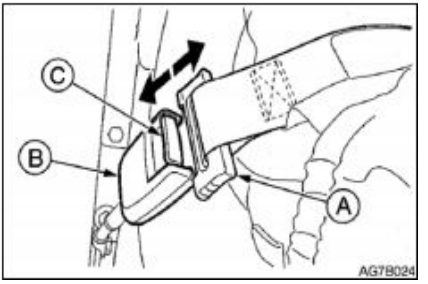

1. Hold the seat belt tab (A) and then push down the button (C) on the seat belt buckle (B).

2 The seat belt retracts to its original position.

Records

Panel Name and Description

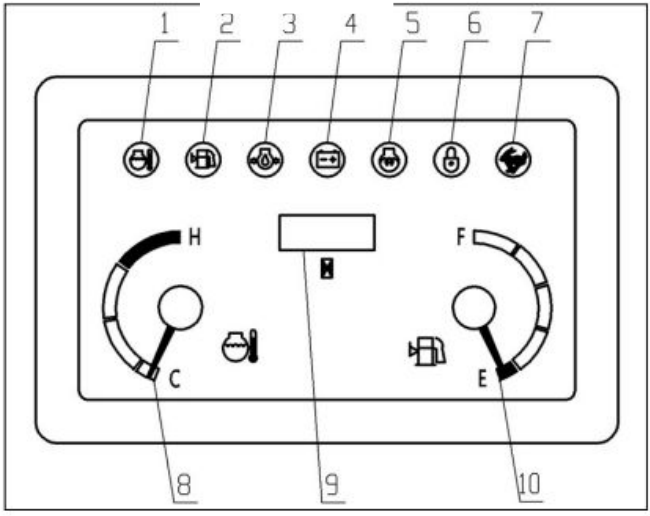

Analog display

Number	Function	Measuring range	Alarm parameter	Alarm mode	Display mode	Alarm icon
1	Cooling water temperature	40~120℃	≥105℃	Icon flicker +beep	Pointer segmentation display	
2	Fuel level	0%~100%	≤10%	Icon flicker +beep	Pointer segmentation display	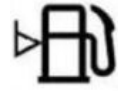
9	Working hour meter	0~99999.9h			Precise digital display	

On-off display

Number	Function	Alarm (control) condition	Alarm (control) mode	Icon color	Alarm icon
3	Oil pressure	Ground the engine before operation	No alarm	No display	
		Ground the engine after operation	Icon flicker +beep	Red	
4	charging	High level (take generator P)	Icon display	Green	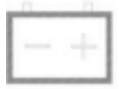
5	Preheating indication	High level	Icon display	Red	
6	Safety lock (reserved)	High level	Icon display	Green	
7	High speed indication	High level	Icon display	Red	

Cooling water temperature display

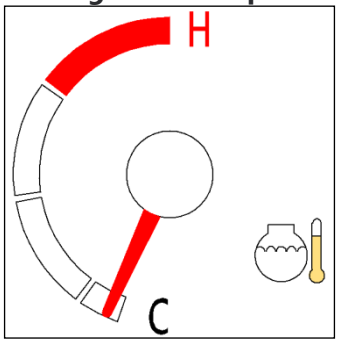

Displays the current engine operating temperature. Light grid display, you can more intuitively understand the temperature of cooling water. If the water temperature meter pointer refers to the white area, it means that the water temperature is normal in the operation; If the water temperature indicator pointer points to the red area, it means that the water temperature is too high, and the engine water temperature alarm icon displays the monitor to issue a sound alarm. At this time, you should immediately stop or reduce the engine speed to idle and check the status of the cooling water. Water temperature parameters are read through CAN communication

Fuel level display

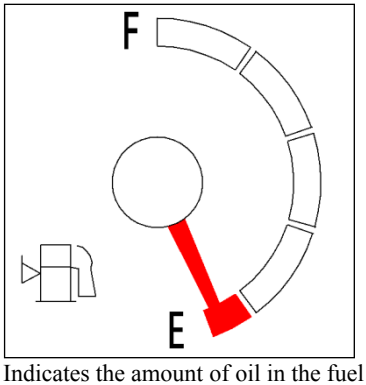

Indicates the amount of oil in the fuel tank. If the pointer refers to the white light grid, it means that the fuel oil level is normal in the operation; If the pointer refers to the red light grid, the fuel level alarm indicator flashes, and the monitor issues a sound alarm, it means that there is not much fuel left in the tank, and it should be checked and refueled in time

Precautions

This instrument is a water-proof instrument, featuring stable performance and high conciseness and elegance, and is an intelligent instrument developed specially for small excavators. To guarantee the stable data and prolong the life of instrument, please notice the following issues:

1. Do not disassemble the instrument without permission.
2. Never brutally hammer or knock the instrument.
3. Guard against external damages.
4. Keep clean the panel. Any organic solvent or corrosive liquid, including diesel and gasoline, shall be timely wiped away, in order to prevent corroding the panel.
5. Should you have any question during use, please timely contact service personnel.

After-Service Information

Provided that the operations are performed normally as per the instructions of the manual, the malfunctions occurred within the warranty period will be repaired free of charge. Please carry this warranty certificate during the repair of this product and repair by a sales point of this device. The repair expense will be charged under the following conditions:

1. No warranty certificate.
2. Malfunction due to incorrect use of this device or non-authorized repair or modification ofthis device.
3. Malfunction due to falling at user's default during transport after purchase.
4. Malfunction due to fire, earthquake, gas leakage, windstorm, thunder and lightning, and abnormal voltage.
5. The purchase date or customer name is not recorded in this manual or the information is altered.

Switches

Starter Switch

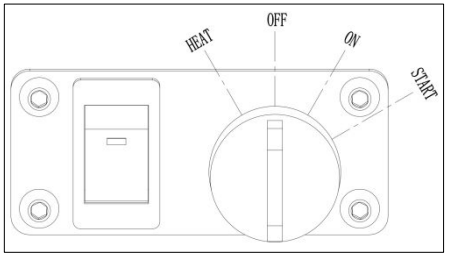

Important: Do not rotate the starter key from OFF to ON and then from ON to OFF repeatedly within a short time, otherwise it will probably result in engine malfunction.

OFF …… This position is used to stop the engine and insert and withdraw the starter key.
ON …… Engine running position. All electric devices are functional at this position.

START …… Engine running position. Upon release of key, the switch automatically returns to ON.

If the coolant temperature is too low, rotate counter-clockwise the key, hold for 10~15s, and then release before start. Rotate the key to ON and then to START to start the engine.

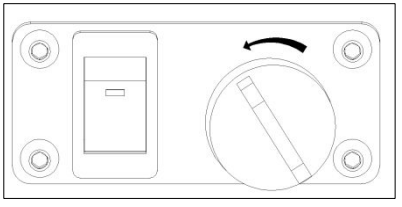

Horn button

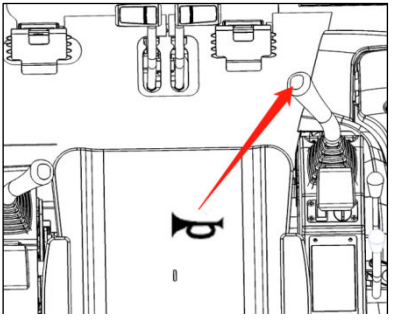

Press the switch on the right joystick to sound the horn.

Light switch

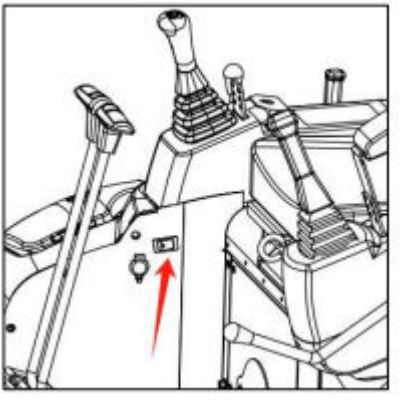

1,Press this button forward to turn on the work light.

Joysticks and Pedals

Safety lock handle

Warning

- Before standing up from the driver seat to adjust the operator's seat, lower the working device to the ground, lift up the safety lock handle to lock it, and stop the engine. When the safety lock handle is lowered down (Unlocked), the accidental touch of any joystick will result in sudden movement of machine and cause serious injuries or deaths.
- While lifting up or lowering down the safety lock handle, take cautions not to touch any joystick.
- Before leaving the driver seat, lower the working device onto the ground, lift up the safety lock handle to locking position, and stop the engine. Meanwhile, ensure to withdraw the key, close the doors and hoods, and carry the key with you and then preserve it in a designated place.

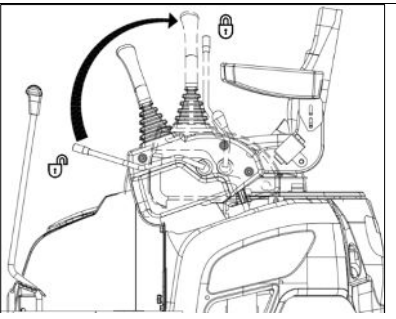

Accelerator joystick

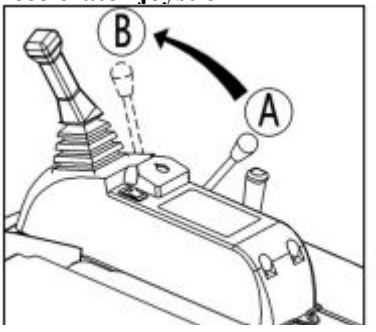

It's used to control the engine speed.

(A) … Low idling speed

(B)… Maximum speed

Joysticks

Warning

- Before starting operations, please carefully check and confirm the joystick mode to be used.

- The descriptions in this manual use the ISO mode of machine.

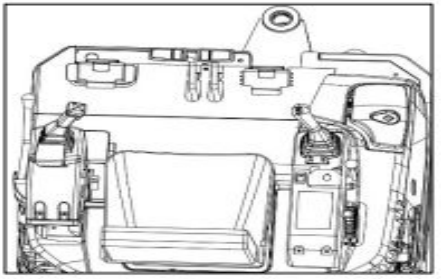

Control Mode

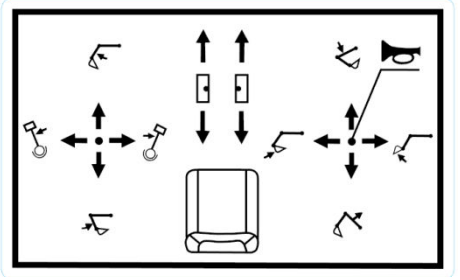

Bulldozing blade joystick

Use this joystick to operate the bulldozing blade.

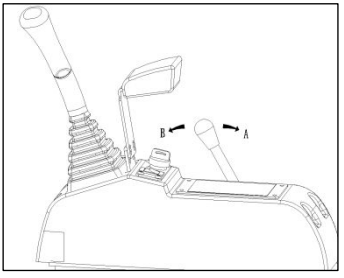

(A) … Lift the bulldozing blade.

(B) … Lower the bulldozing blade.

Traveling Joystick/Pedal

Warning

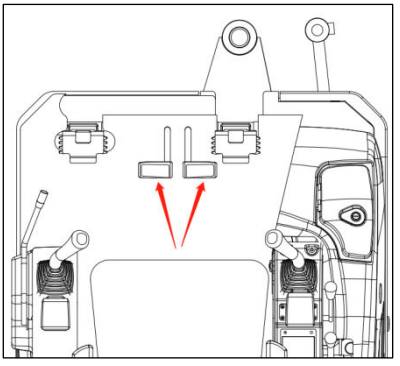

- Before operating the traveling joystick/pedal, ensure that the bulldozing blade is in front of the driver seat. Please bear in mind that the operation direction of the traveling joystick/pedal with bulldozing blade behind the driver seat is reverse to that with bulldozing blade in front of driver seat.
- Never place your foot onto the pedal, except the traveling operations. The accidental touch of the pedal during operations will probably cause sudden movement of machine to result in serious injuries or deaths.

Use this joystick/pedal to drive forward or backward and change the direction. Retract the pedal when it's not in use.

Boom swing pedal

Warning

When the pedal is not in use, hold the pedal cover at locking position. If it's not locked, the accidental depressing of pedal will probably result in accidents.

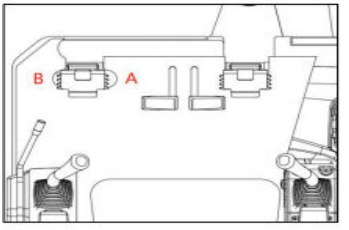

Use this pedal to operate the boom swing.
(A)... Swing the boom to the right
(B)... Swing the boom to the left

Auxiliary hydraulic pipeline

1st/2nd auxiliary hydraulic pipeline (If installed)

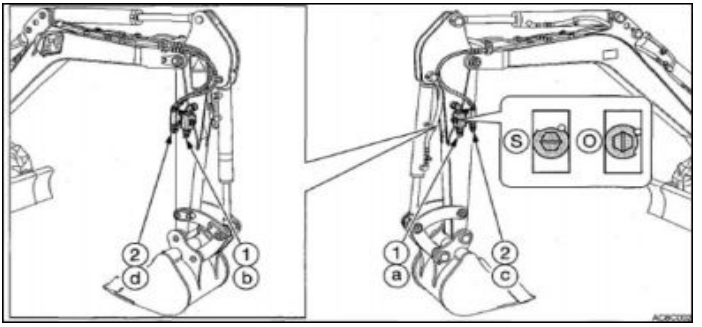

3rd auxiliary hydraulic pipeline (If installed)

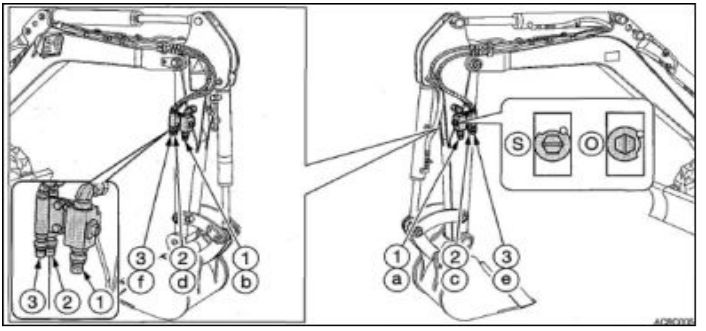

Warning

Disconnecting the pipelines before the pressure relief of hydraulic system will probably result in out-spray of hydraulic oil.

- Immediately after the engine stops, press each auxiliary hydraulic pedal and the second auxiliary switch several times to release the pressure in the auxiliary hydraulic circuit.
- Slowly loosen the air plug to relieve pressure inside the hydraulic tank.
- When disconnecting the hose, stand to one side and slowly lossen it, slowly releasing its internal pressure before disassembling.

These pipelines delivers the hydraulic oil required for the operations of hydraulic breaking hammer, breaking hammer, and other

working devices.

(1) 1st auxiliary hydraulic pipeline

(2) 2nd auxiliary hydraulic pipeline

3rd auxiliary hydraulic pipeline shutoffvalve

(S): Close

(O): Open

Connection of Hydraulic Circuits

To connect the attachment hydraulic pipeline, please operate as per following procedure:

1. Relieve the residual pressure from system

and then close the shutoff valve. Refer to "Relief of Residual Pressure" in page 2-26 for details.

2. Take out the connector.

3. Connect the attachment hydraulic pipes to

ports (a/c) and (b/d). While installing a hydraulic breaking hammer, connect the oil inlet port to port (a) and oil return port to port (b).

4. Open the shutoff valve. While installing a

hydraulic breaking hammer, open the selector valve (1).

5. After connections, fully bleed the air from hydraulic pipes.

a. Start the engine and run at low idling speed under no-load condition for 10min.

b. During the running of engine at low idling speed, operate the hydraulic auxiliary switch repeatedly (for approximately 10 times) to bleed the air from hydraulic pipes.

c. Stop the engine and wait for at least 5min, till the air bubbles overflow from the hydraulic oil in the oil tank.

Important: If applicable, follow the attachment manufacturer's procedure to bleed the air.

6. Check for presence of oil leakage.

Disconnection of Hydraulic Circuits

1. Relieve the residual pressure from system and then close the shutoff valve. Refer to "Relief of Residual Pressure" in page 2-22 for details.

2. Disconnect the pipelines from ports (a/c) and (b/d).

3. Install the connector.

Operations

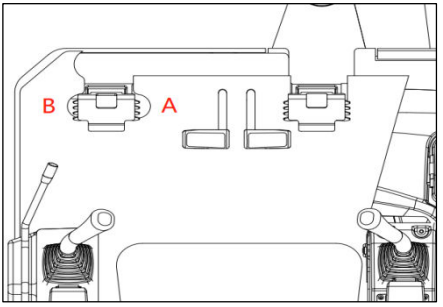

Press this pedal to control the fuel flow in the auxiliary hydraulic line.

(A) Hydraulic oil flow left auxiliary line(a)

(B) Hydraulic oil flow right auxiliary line(b)

Relief of Residual Pressure

The auxiliary hydraulic circuit still contains residual pressure after use. It's referred to as residual pressure. Please relieve the residual pressure after disconnection of pipelines.

1. After the stop of engine, depress the auxiliary hydraulic pedal from one side to other side for several times.

Operations



Before Start of Operations

Getting on/off Machine

Warning

- Do not jump on or offthe machine. Do not attempt to get on or offa moving machine.
- Before getting on or off the cab, firstly open the door completely to locking position and check and ensure that the door can't move further.

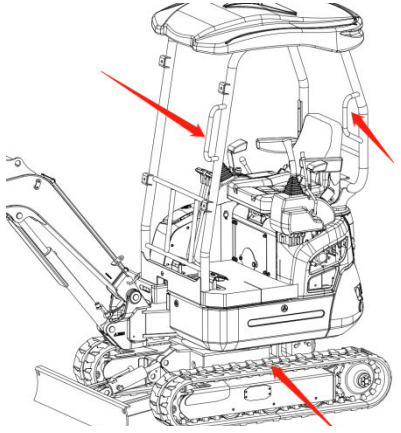

- While getting on/off the footplates, hold the handrails to support your body weight and maintain three-point balance posture (Hands and feet) for your body.
- Do not use safety lock handle or any joystick as hndrail.

Walk-Around Checking

Before the first start of engine each day, fulfill one walk-around checking.

Refer to page 5-15 and 5-16 "Maintenance, Walk-Around Checking".

Daily Routine Checking

Before the first start of engine each day, fulfill one walk-around checking.

Refer to page from 5-17 to 5-21 "Maintenance, daily routine inspection".

Start and Stop of Engine

Before Start of Engine

1. Adjust the seat to comfortable operating position.
2. Fasten the seat belt.

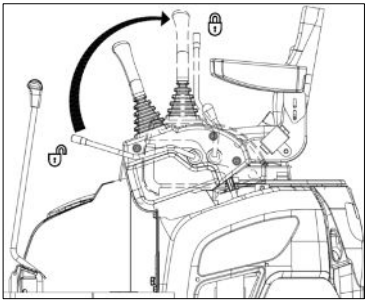

3. Check and ensure that the safety lock handle is at locking position.

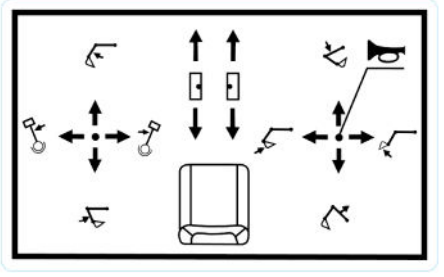

4. Check and ensure that all joysticks and pedals are in neutral position.

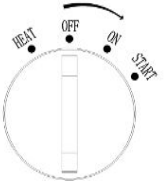

5. Insert the key into starter switch, rotate to ON position, and then check as below:

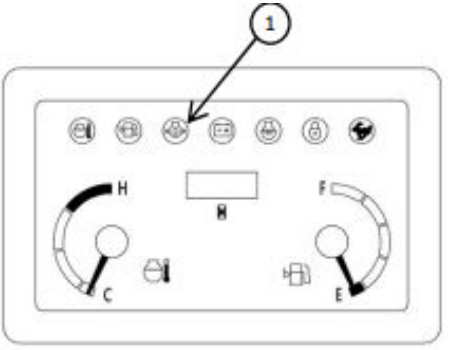

- All warning lamps turn on for 1s and the warning tone is issued for 2s. The instruments start working. After 2s, the engine oil pressure warning lamp (1) turns on and the other lamps turn off.
- Press the lamp switch and check and ensure that the boom lamp, headlamp, and instrument lamp turn on.

If a lamp fail to turn on or a warning lamp fails to sound, the lamp bulb or wire is probably damaged. Please contact a Kenstone Heavy Machinery service dealer for repairs.

Start of Engine

Warning

- **Keep all personnel away from working zone.**
- **Sound the horn to alert the personnel around machine.**

Important: Do not run the starter motor continuously for >15s. If the engine fails to start, wait for 60s and then attempt to restart the engine.

Important: If the engine stops due to shortage of fuel, please add fuel, rotate the key to ON for 60s, and then rotate it to START position. Running the starter motor for a long time before the supply of sufficient fuel will cause start failure of starter motor.

Normal Start:

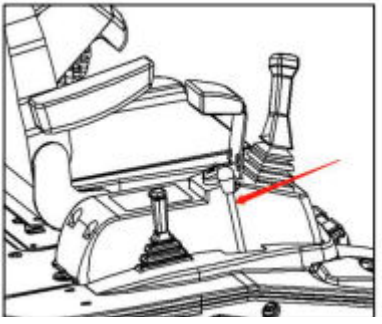

1. Pull the accelerator joystick to neutral position.

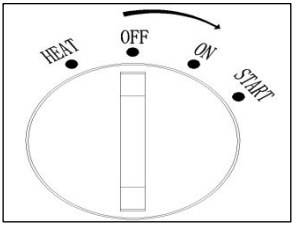

2. Rotate the starter key to START position to start the engine.
3. After the engine is started, release the key. The key will automatically return to ON position.
4. Check and ensure that all warning lamps are already off.
5. Return the accelerator joystick and warm up the engine. Refer to “Engine warm-up" in page 3-5 for details.

Start in Cold Weathers:

Warning

Never use starting fluid on this engine, as the starting fluid will probably explode.

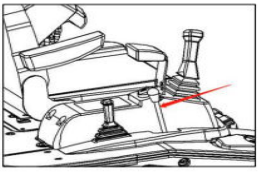

1. Pull the accelerator joystick to neutral position.

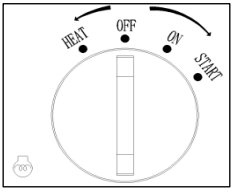

2. Rotate the starter key counter-clockwise to PREHEATER position for approximately 10s. The preheater indicator lamp turns on to indicate the running of preheater.

3. Turn the key to the "ON" position and wait for the meter light, when the buzzer stops, turn the key to the START position.

4. Release the key immediately after the engine starts, and the key will be automatic return to the "ON" position.

5. Check and confirm that the alarm light is off.

6. Return throttle lever and warm up engine.

See "Engine Warming" for details.

Engine warming

Important: Before the end of the warm up, the engine should avoid running at full speed. Do not warm up the engine for too long (more than 20 minutes or more) Load or idle from time to time when idle is required run the engine quickly.

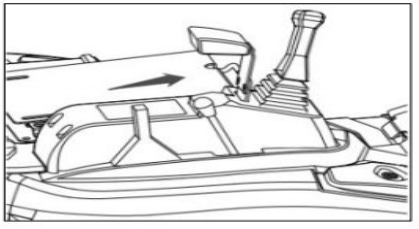

1. Return the throttle lever and run the engine empty at low idle for 5 minutes.

Turn off the engine

Important: Do not turn off the engine suddenly when operating at high speed under heavy loads, as this may cause the engine to overheat or jam. Never stop the engine unless it is an emergency.

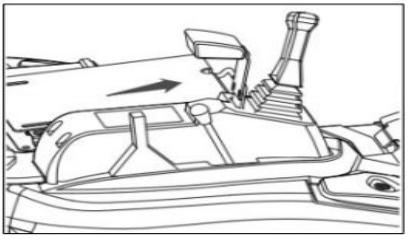

1. Return throttle lever.
2. If the engine is running at idle speed for about 5 minutes, turn off the engine.

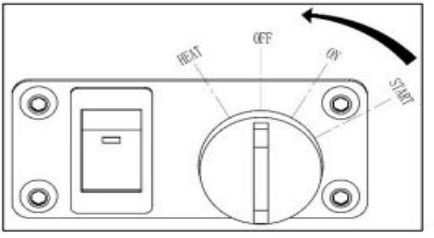

Operations of Machine

Joystick Mode (ISO Mode)

⚠ Warning

- Before starting operations, please carefully check and confirm the joystick mode to be used.
- The descriptions in this manual use the ISO mode ofmachine.

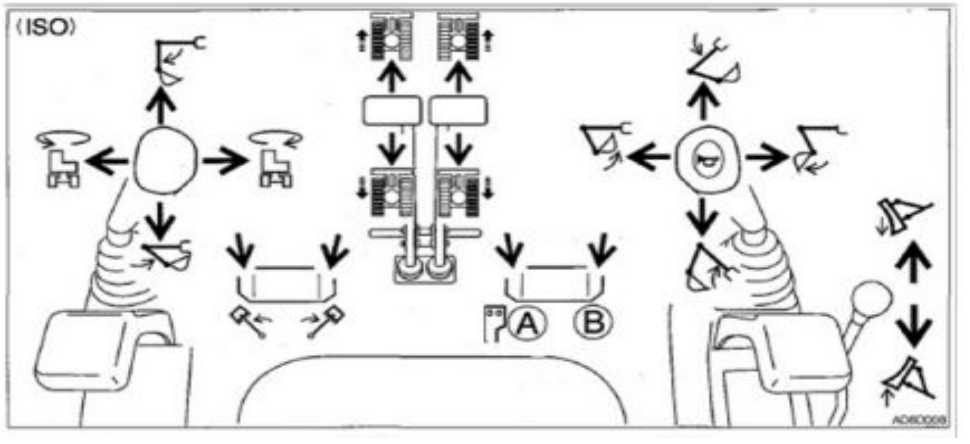

	Drive leftward		Drive rightward
	Back up to left		Back up to right
	Extend arm		Lower boom
	Retract arm		Lift boom
	Top car back to the left turn		Load bucket
	Top car back to the right turn		Dump bucket
	Swing the boom to the left		Lower bulldozing blade
	Swing the boom to the right		Lift bulldozing blad

Warm up the engine (hydraulic oil)

⚠ Warning

It's really dangerous to operate the working device without warm-up (Hydraulic oil), as the working device can't respond quickly to the controls or will motion probably in unexpected manner and the safety devices can't work normally probably. Therefore, ensure to warm up the machine sufficiently.

Important: Before the end of the warm up, avoid running the engine at full speed.Do not warm up the engine for too long (more than 20 minutes or more). Load or idle from time to time when idle is required.

Run the engine quickly.

Normal Warm-up

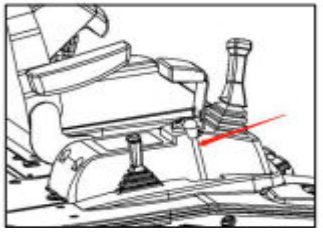

1. Return to throttle lever and then fly at low idle speed.

Line engine for 5 minutes.

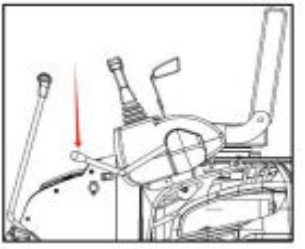

2. Completely lower down the safety lock handle to unlock and lift the bucket from the ground.

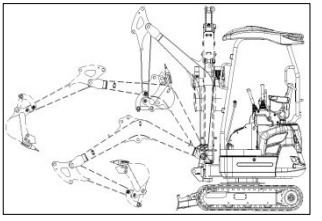

3. Slowly telescope all cylinders for several times under no-load condition

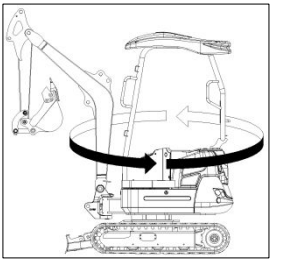

4. Slew slowly leftward and rightward for several times.

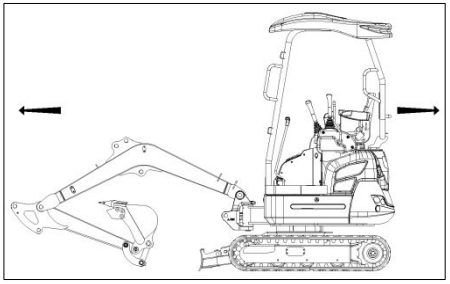

5. Drive forward and backward slowly for several times.

Warm-up in Cold Weathers

1. Fulfill the normal warm-up procedure.

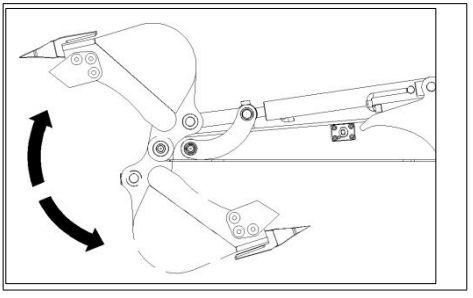

2. Operate the bucket cylinder to an end and hold.

   Do not hold at this position more than 30s.

3. Repeat step 2, till the running speed of the bucket is normal.

Checking after Warm-up

After the warm-up of engine and machine (Hydraulic oil), check as per following procedure and when necessary repair.

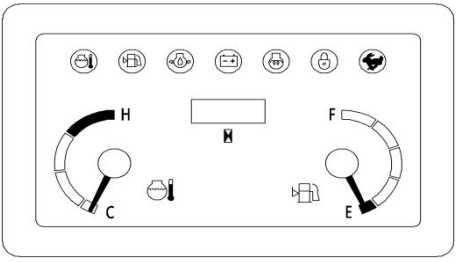

1. Check the warning lamps and instruments as below:

- Whether all warning lamps turn off.
- Whether the LED lamp of water temperature gauge is within green range.

2. Check for normal engine exhaust gas color, sound, and vibration.

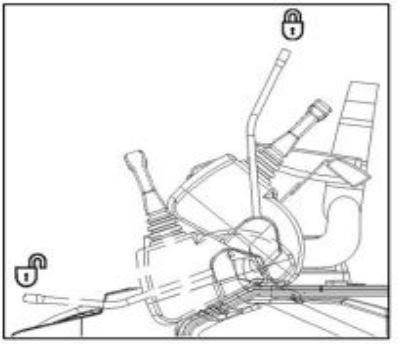

3. Lift up the safety lock handle to locking position and check whether the operation and traveling joysticks are locke

Operations of Traveling

Joystick/Pedal

⚠ Warning

- Do not allow any person to access the turning radius or path of machine.
- Sound the horn to indicate your movement intention.
- There are blind zones behind the machine. To reverse the machine, if necessary, slew the cab to check the safety and ensure there is no person behind the machine.

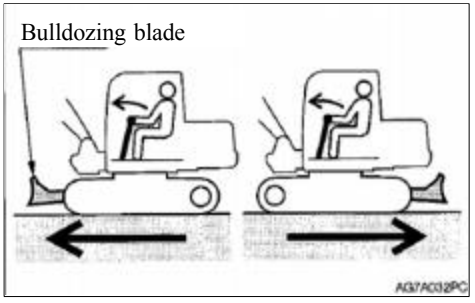

- Before operating the traveling joystick/pedal, ensure that the bulldozing blade is in front of the driver seat. Please bear in mind that the operation direction of the traveling joystick/pedal with bulldozing blade behind the driver seat is reverse to that with bulldozing blade in front of driver seat.
- Remove all obstacles from the path of machine.

Longitudinal Movement of Machine

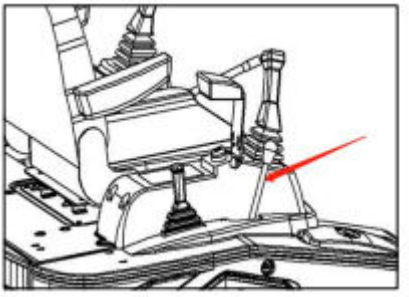

1. Pull the accelerator joystick to increase the engine speed.

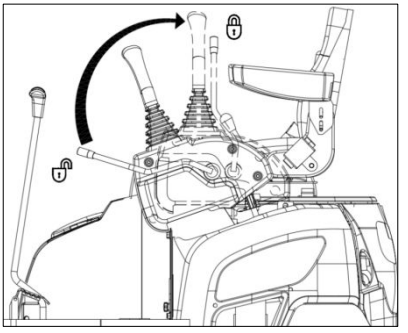

2. Completely lower down the safety lock handle to unlock.

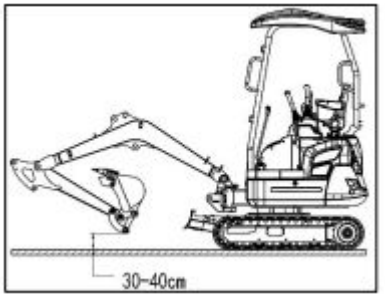

3. Retract the bucket working device and lower to 30~40cm offthe ground.
4. Lift the bulldozing blade.
5. Operate the traveling joystick as per following procedure.

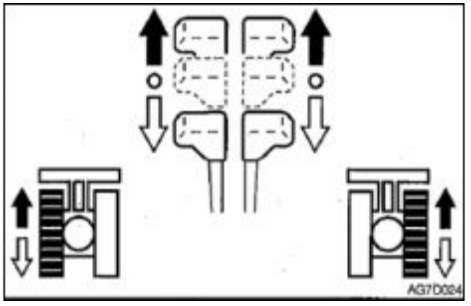

When the bulldozing blade is in the front of cab:

To drive forward:

Pull forward the joystick.

To drive backward:

Pull backward the joystick.

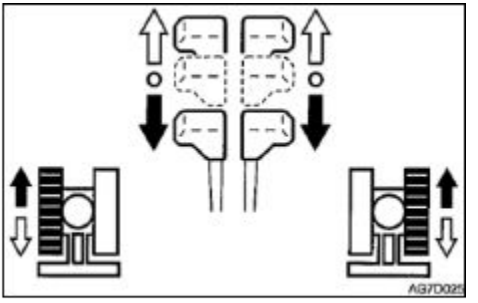

When the bulldozing blade is in the rear ofcab:

To drive forward:

Pull backward the joystick.

To drive backward

Pull forward the joystick.

Pivot Steering

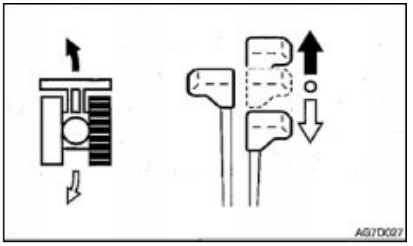

Left turn under stopped status:

To turn left the head:

Push forward the right joystick.

To turn left the tail:

Push backward the right joystick.

To turn backward, operate the right joystick by same operation method of left joystick.

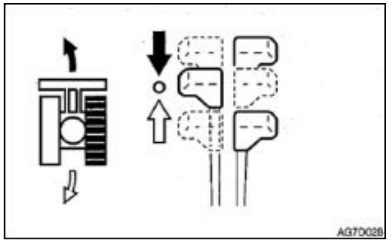

Left turn during traveling:

To turn left during forward traveling: Place the left joystick to neutral position. When walking backward: Place the left joystick to neutral position. To turn rightward during traveling, operate the right joystick by same operation method of left joystick.

In-situ Turnaround

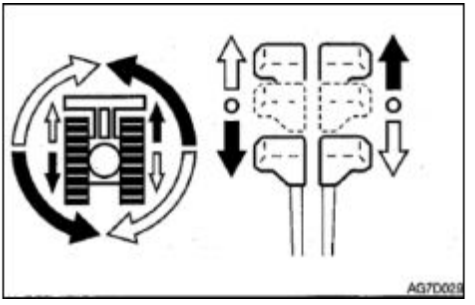

In-situ left turn:

Pull backward left joystick and push forward right joystick.

In-situ right turn:

Pull backward left joystick and push forward left joystick

.Stop of Traveling

Warning

- Stop the machine on a level, solid, and safe ground. Set the parking device. If it's necessary to park the machine on a slope, block the track by wedges to prevent movement of machine.
- When the safety lock handle is unlocked, the accidental touch of any joystick will result in sudden movement of machine and cause serious injuries or deaths.
- Please be noted that, even if the safety lock handle is placed at locking position, the bulldozing blade, boom, and auxiliary hydraulic controls can't be locked.

  Do not touch such controls accidentally

Caution

Do not stop the machine hastily, unless in event of emergency. Stop the machine at the optimal timing whenever possible.

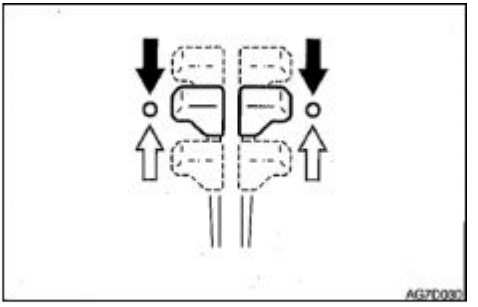

1. Slowly place the left and right traveling joysticks to neutral position. Stop the machine.

Operations of Working Device

Warning

- Before starting operations, please carefully check and confirm the joystick mode to be used.
- The descriptions in this manual use the ISO mode of machine.

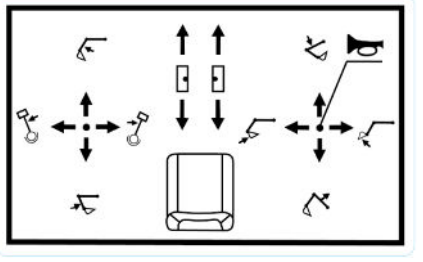

Use the right joystick to operate the boom and bucket.

Use the left joystick to operate the bucket arm

and slewing.

Return the joysticks to neutral position to stop the bucket working device.

1. Lower down the safety lock handle to the unlocking position.
2. Set the pedal cover to unlocking position.

Slewing

Warning

Before slewing, check the surrounding area for safety.

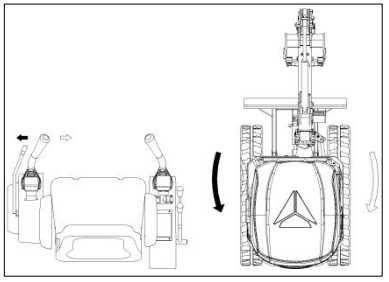

Slew leftward superstructure:

Push leftward the left joystick.

Slew rightward sperstructure:

Push rightward the left joystick.

Operations of Boom

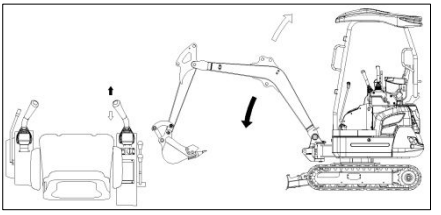

Lower boom:

Push forward the right joystick.

Upper boom:

Push backward the right joystick.

Operations of Bucket Arm

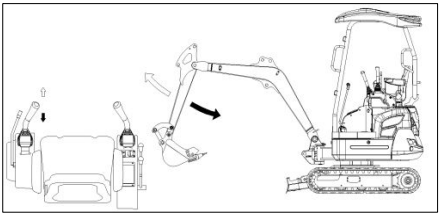

Retract bucket arm:

Push backward the left joystick.

Extend bucket arm:

Push forward the left joystick.

Operations of Bucket

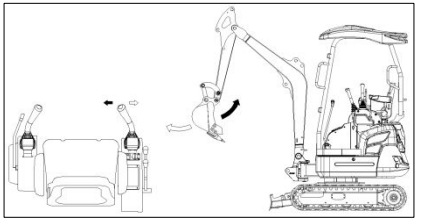

Load bucket:

Load bucket:

Push leftward the right joystick.

Dump bucket:

Push rightward the right joystick.

Swing of Boom

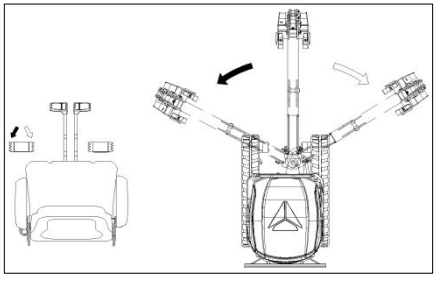

Swing leftward the boom:

Depress the left side of pedal.

Swing righttward the boom:

Depress the right side of pedal.

Operations of Bulldozing Blade

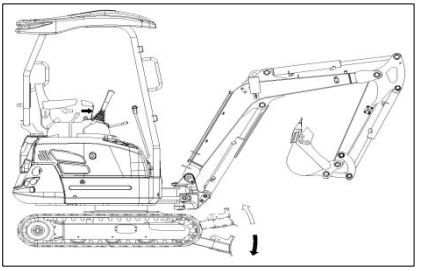

Lower bulldozing blade:

Push forward the joystick.

Upper bulldozing blade:

Push backward the joystick.

Operation Procedures

Prohibited Operations

⚠ Warning

- Do not operate on a bed rock (Hard or soft).
- Do not slew during the traveling. If it's necessary to operate the bucket working device during traveling, operate at sufficiently low speed to ensure the complete control at all times.

Do not use the slewing force for demolition or leveling operations.

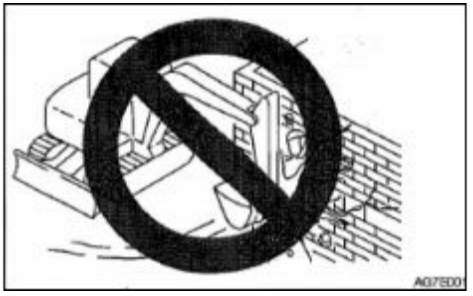

Do not use slewing force to dismantle walls or level ground. In addition, do not insert the bucket teeth into the ground during slewing. Otherwise the bucket working device will be damaged.

No Digging during Traveling

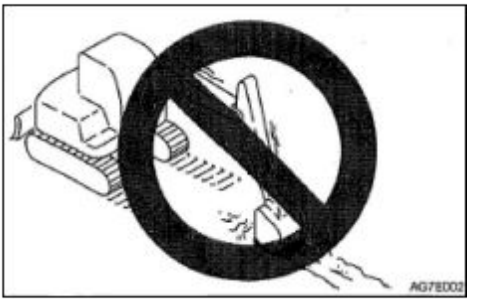

Do not insert the bucket into the ground or use the traveling force for digging.

Steady Operations of Hydraulic Cylinders

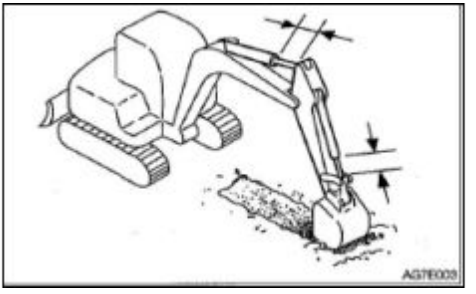

Do not extend any hydraulic cylinder to the end. Reserve an allowance during operations.

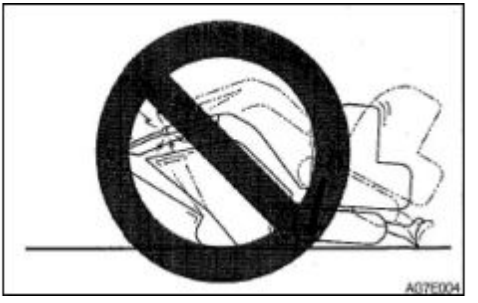

When the machine body is lowered and the bucket arm cylinder is completely extended, do not support the machine body by bucket working device. Otherwise, the load will be concentrated on the bucket arm cylinder to probably damage the bucket arm cylinder.

No Digging by Pulling or Hammering Bucket



This will shorten the life of bucket working device. Dig by hydraulic force.

Do not operate by the down force of machine.



Using additional tension onto the machine will shorten the life of machine. During digging, use the hydraulic force of cylinders by shallow depth and large travel.

Digging of Bed Rock

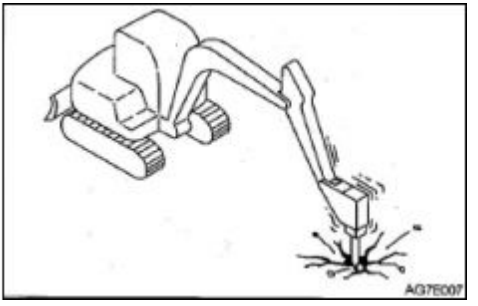

For hard bed rocks, it's preferable to break the

rock into small pieces by breaking hammer before digging. It can prevent the damages of machine and thus can be more economic.

Guard Bulldozing Blade against Impact



Impacting the bulldozing blade with rock will damage the bulldozing blade and bulldozing blade cylinder.

Careful Retraction of Bucket Working Device



While retracting the bucket working device, take cautions not to impact the bucket with bulldozing blade.

Prohibited Use of Bulldozing Blade as Support

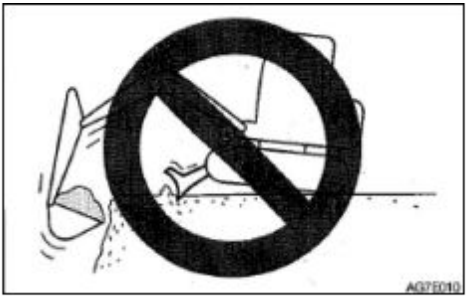

Caution of Bulldozing Blade during Digging



For deep digging operations, if the bulldozing blade is in the front, take cautions to prevent impacting the boom and bucket with bulldozing blade.

During operations, place the bulldozing blade on the rear ofmachine whenever possible.

Caution of Downward Digging with Bulldozing Blade

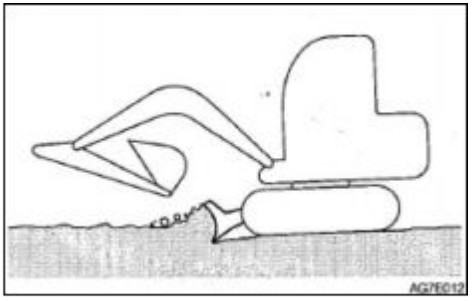

This bulldozing blade is designed for simple bulldozing operations. Do not use the bulldozing blade for deep digging. Otherwise, the bulldozing blade and the underframe will probably be damaged.

Precautions for Operations

Precautions during Traveling

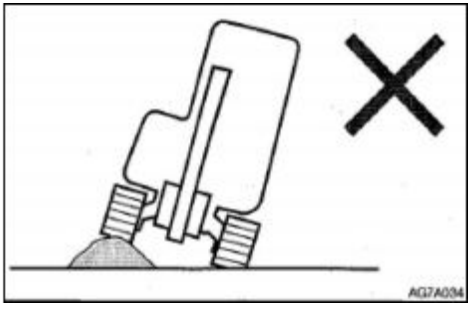

Driving the machine over obstacles (Including rocks and stumps) will probably apply high load onto the machine body and damage the machine. Avoid driving over obstacles whenever possible. If it's necessary to drive over obstacles, close the bucket working device to the ground, drive the machine at low speed, and drive the machine in such manner that the obstacles are in the middle oftracks.

Precautions for Traveling in 2nd Gear (High Speed)

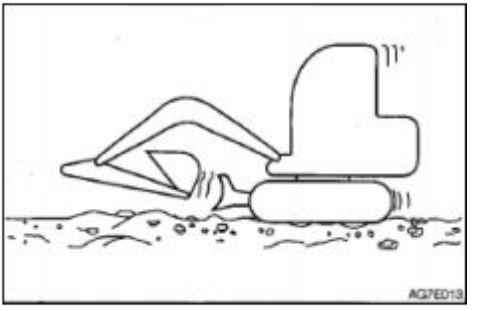

- On rugged roads, drive the machine at low speed and avoid the sudden startup, stop, and direction change.
- When the machine is traveling in 2nd gear (High speed) and a load higher than set value is applied, the machine will automatically slow down to 1st gear (Low speed). If the load is reduced, the machine will accelerate and return to 2nd gear (High speed). Please be noted that the traveling speed varies depending on the load condition (For machine with automatic traveling gearshift reducer system).
- Place the bulldozing blade in the front

while traveling in 2nd gear.

Precautions for Operations of This Machine in Water

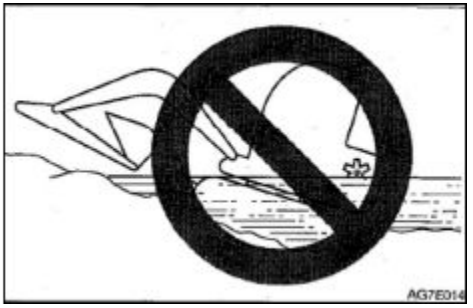

Immersing the rear of machine in the water as shown in above diagram will result in the rotation of radiator fan in the water to damage the fan. It's prohibited to immerse the rear of machine in the water.

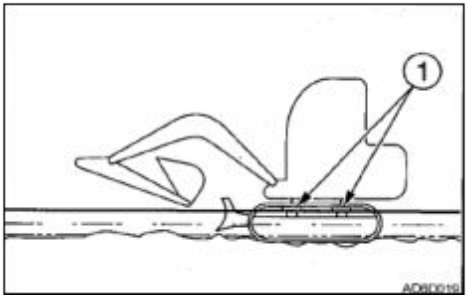

- Permissible water depth

  Operate this machine in the water only when the water level is not above the middle of track shoe (1).

- For those parts used in water for a long time, add sufficient grease till the used grease is squeezed out.

- Do not immerse the slewing support or body in the water or sand. If already immersed, please contact a Kenstone service dealer for checking.

Precautions for Traveling on Slopes

⚠ Warning

- Do not drive the machine on a slope steep enough to cause instability of machine. Please be noted that, in the actual applications, the performances of machine on a slope will be deteriorated due to severe working conditions.

- While traveling on a slope, lower the bucket to 20~30cm off the ground. While climbing up a steep slope, extend the bucket working device to the front position. In event of an emergency, lower the bucket onto the ground and stop the engine of machine.

- While traveling on a slope, drive slowly in 1st gear (Low speed).

- Keep the driver seat facing towards the upslope direction while climbing up a slope. Keep the driver seat facing towards the downslope direction during downslope traveling. In both cases, pay special attention to the ground ahead of

the machine during traveling.

- Do not reverse the machine down a slope.

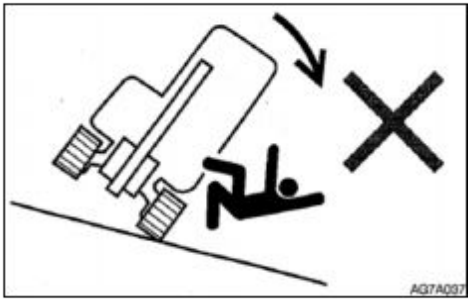

- Do not change direction on a slope or lateral slope. Firstly return the machine to a level ground and then select another path.
- The machine will probably slip laterally while traveling on a gentle slope covered by grass or dry leaves or traveling on a wet metal plate or frozen surface. Do not park the machine laterally on a slope.

Traveling Posture on Slopes

Upslope Traveling

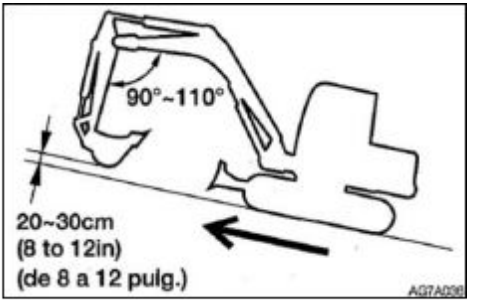

To climb up a 15°or higher slope, maintain the machine posture as shown in above diagram.

Downslope Traveling

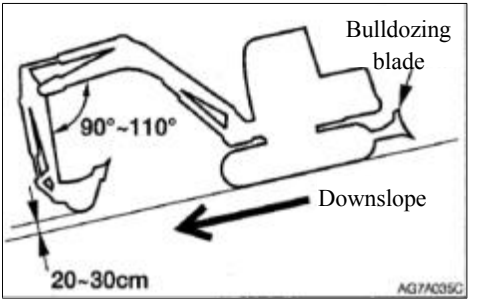

While driving down a 15° or higher slope, reduce the engine speed and maintain the machine posture shown in above diagram.

Braking during Downslope Traveling

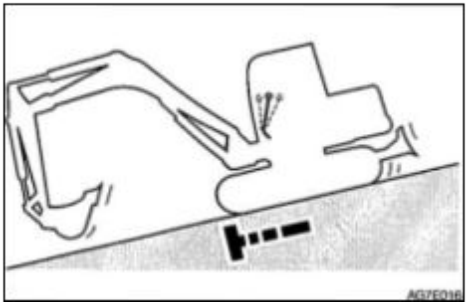

While driving down a slope, the brake applies braking automatically after the traveling joystick returns to neutral position.

In Event of Track Slip

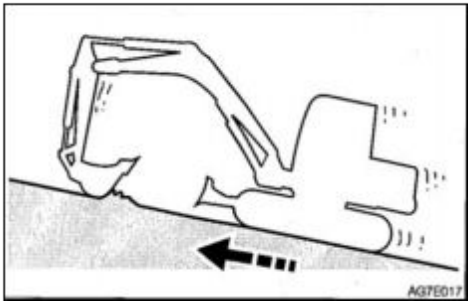

In event of traveling failure due to track slip while climbing up a slope, use the digging force of bucket arm to climb up the slope.

In Event of Engine Flameout

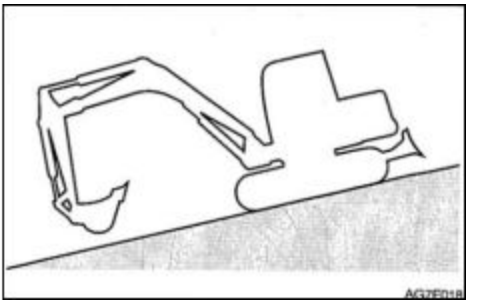

If the engine stops while driving down a slope, shift the traveling joystick to neutral position, stop the machine, and then start the engine.

No Opening of Doors during Traveling on Slopes



It's dangerous to open doors during traveling on slopes, as the force required to open or close doors changes suddenly. Please ensure to close doors securely while traveling on slopes.

Escape from Mud

If the machine is entrapped in the mud, drive out as per following procedure.

Entrapment of One Track in Mud



1. Swing the bucket towards the track entrapped in the mud.
2. Set the angles at 90~110°for bucket arm and boom.
3. Push the bucket bottom (Not bucket teeth) onto the ground.
4. Place a wood plate or similar object beneath the lifted track.
5. Lift the bucket and drive out the machine from the mud slowly.

Entrapment of Both Tracks in Mud



1. Operate above-mentioned steps 1~4 for both tracks.
2. Insert the bucket into the ground in the front ofmachine.
3. Pull the bucket joystick during forward traveling to slowly drive out the machine.

Allowed Operations ofMachine

Digging

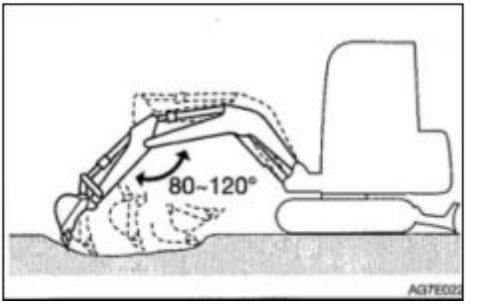

1. Place the bulldozing blade to the opposite side of the digging zone.
2. Dig by bucket arm and bucket. It's preferable to dig by shallow depth and large travel. The maximum digging force is achieved when the angle between boom and bucket arm is 80~120°. It's preferable to change the angle for effective digging.

Ditching

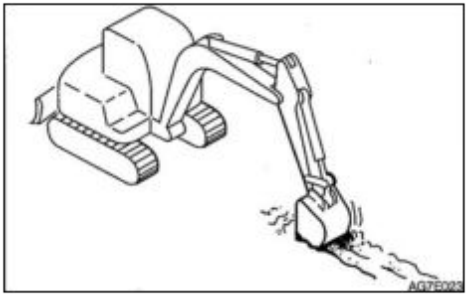

Install a bucket suitable for digging of ditches, adjust the tracks to be parallel with the ditch to be dug, in order to improve the working efficiency. While digging a wide ditch, dig the side faces and then the middle area.

Digging of Side Drainage Ditch

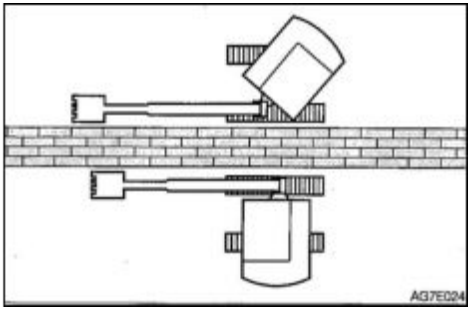

As shown in the diagram, dig the side ditch by swing function of boom.

Loading

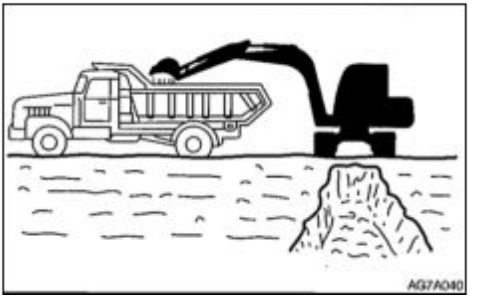

While loading soil into the cargo body of a truck, loading from the rear end of truck can load more soil easier than loading from the front end. In addition, the small angle slewing can be used to improve the efficiency.

Leveling

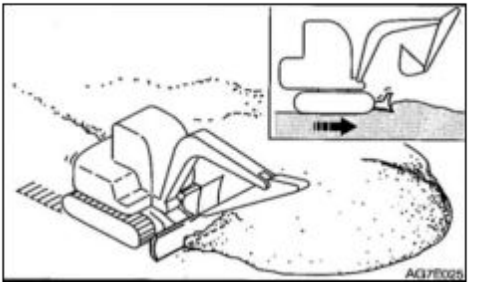

1. Close the bucket working device to the machine body.
2. Slowly push away the soil from the side face of soil pile.
3. If the soil pile is low, push the soil from the top. If the load is too heavy for the machine body, lift or lower the bulldozing blade for adjustment.

Parking of This Machine

Parking

Warning

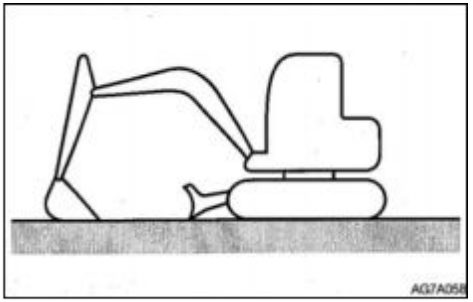

- **Stop the machine on a level, solid, and safe ground. Set the parking device.**

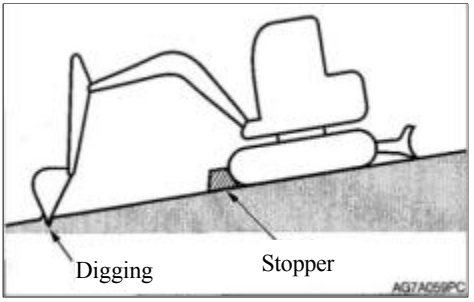

- If it's necessary to park the machine or tilt the machine on a slope, securely park the machine and block the machine against movement.
- While parking the machine in a street, use gratings, warning signs, or lamps to keep the visible even in the night, in order to prevent the impact with other vehicles.
- Before leaving the seat, lift up the safety lock handle to the locking position and stop the engine. Meanwhile, ensure to withdraw the key, close the doors and hoods, and carry the key with you and then preserve it in a designated place.

1. Place the left and right traveling joysticks to neutral positions.
2. Push backward the accelerator joystick to idle the engine.
3. Lower the bucket and bulldozing blade onto the ground.
4. Lift up the safety lock handle to the locking position.
5. Stop the engine and withdraw the key.
   Refer to page 3-5 "Stop of Engine".

Checking after Stop of Engine

1. Check for leakage of oil and water and check the working device, cover, and underframe. Upon detection of any abnormality, repair.
2. Fully fill fuel.
   Refer to page 5-18 "Checking of fuel level".
3. Remove paper fragments and dusts from engine compartment.
4. Remove the mud from underframe.

Locking

Ensure to lock the following parts.

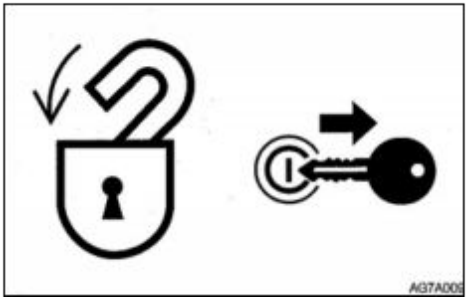

- Fuel Tank Cap
- Engine hood
- Cover

Treatment in Cold Weathers

Preparations for Cold Weathers

It's difficult to start the engine in cold weathers. It becomes more difficult if the coolant is frozen. Fulfill the following preparations for cold weathers.

Replacement of Fuel and Lubricants

Replace the hydraulic oil, engine oil, and fuel with trademarks suitable to cold weathers.

Refer to page 5-4 "Fuel and Lubricant Table".

Engine coolant

⚠ Warning

The engine coolant is inflammable. Keep away from flame.

Use long-life coolant (Antifreeze).

Refer to page 5-4 "Fuel and Lubricant Table".

Battery

The battery performance deteriorates along with the reduction oftemperature.

Check the battery. Upon detection of battery discharging, please contact a Kenstone service provider for charging.

Refer to page 5-33 Checking of battery electrolyte level and adding of electrolyte".

Precautions after Operation

Please abide by the following precautions to prevent the movement failure ofmachine due to frozen mud, water, or underframe.

- Remove all mud and water from machine body. Especially, wipe clean the hydraulic cylinder rod to prevent the ingress of rod surface mud and dusts into the seals along with water drops from damaging the seals.
- Park the machine on a solid and dry ground. If impossible, park the machine on a ground paved with wood boards.
- Fully drain the water from fuel tank to prevent freezing.

  Refer to page 5-29 "Water drainage from fuel tank ".
- As the battery capacity will drop remarkably in low temperature environment, cover the battery or take the battery out of the machine and store it in a warm place. If the electrolyte level is too low, add distilled water before starting operations in the morning. To prevent the freezing of battery electrolyte at nighttime, do not add water after the daytime operations.

After Cold Weathers

When the weather becomes warm, fulfill the following operations.

- Replace the fuel and lubricating oil for all parts as per the trademarks specified by "Fuel and Lubricant Table".

  Refer to page 5-4 "Fuel and Lubricant

Table".

- If the single-season type coolant is used, fully drain the cooling system, thoroughly clean the inside of cooling system, and then add running water.

  Refer to page 5-41 "Cleaning of radiator fins and oil cooler fins".

Handling of Rubber Tracks

This machine is equipped with rubber tracks and the rubber tracks have their intrinsic weakness, namely low strength. Please ensure to abide by the following prohibitions and precautions to prevent damage and falloff of rubber tracks.

Prohibition

Do not drive or operate the machine in following sites:



- Driving and steering the machine on gravels, rough and hard rocks, steel beams, or scrap irons or near the edges of steel plates will damage the rubber tracks.



- Driving the machine on a riverbed or place with numerous pebbles can probably result in inclusion of pebbles in the tracks and the damage or falloff oftracks.



- Do not operate this machine by the sea. The salt content will probably corrode the steel core.



- Keep the tracks away from the adhesion of fuel, lubricating oil, salt, and chemical solvent. These substances will probably corrode the welds of track steel cores to cause rusting or falloff. Such substances adhered onto the tracks shall be immediately removed by water.



- Driving the machine on irregular surfaces, such as new asphalt pavement and hot steel plates exposed to campfire or burning sun will result in irregular wear or damage oftracks.
- Do not move the rubber tracks to possibly slip ground. Otherwise, the wear of the tracks will be probably accelerated.

Precautions

Please abide by the following precautions during the operations ofthis machine:

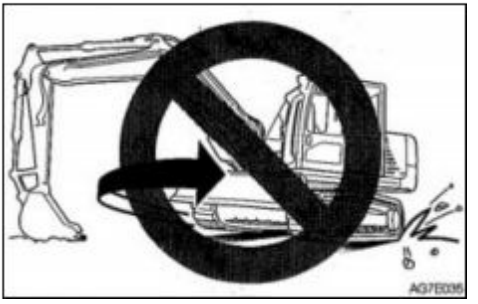

- Do not slew the underframe (The superstructure is not slewed) when the bucket working device is lifted in the front of machine body. Otherwise, the load will be concentrated at single point of tracks and the tracks will be twisted to cause rapid damage.
- In all cases, avoid changing the route suddenly or avoid the in-situ steering on concrete surface whenever possible. Otherwise the rubber tracks will be worn or damaged.
- Avoid the strong impact onto the rubber tracks due to falloff.
- The tracks will be damaged by salt, potassium chloride, ammonium sulfate,

potassium sulfate, and lime triple superphosphate. Such substances adhered onto the tracks shall be immediately removed thoroughly by water.

- Keep both sides of rubber tracks away from friction with concrete or wall surface.
- Do not impact the bucket with the rubber tracks, otherwise the tracks will be damaged.
- Take special cautions on snowy or icy surfaces in winter, as the tracks are vulnerable to slip on such conditions.
- Please use rubber tracks within -25℃~55℃.
- For long-time storage (≥3 months) of rubber tracks, please store in an indoor place without direct sun exposure or rainfall.



- The rubber tracks are not as stable as steel tracks, as they are completely made of rubber. Take special cautions during the lateral slewing and swing.

Guard against Falloff of Rubber Tracks

Abide by the following precautions to prevent the falloff oftracks:

- Always maintain an appropriate tension for the tracks.

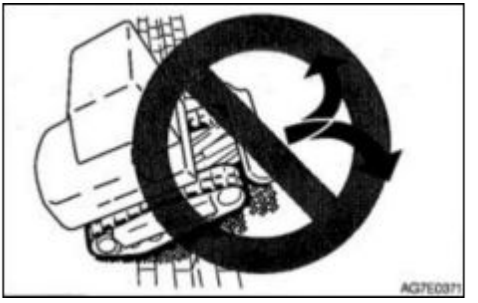

- When driving over pebbles or large steps (≥20cm in depth, such as large rocks), climb on the steps in right angle and do not change route on steps.

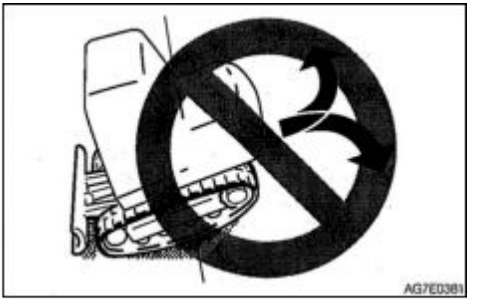

- While reversing up a slope, do not change direction at the start point of slope.



- Please avoid driving the machine with one track on a slope or protrusion and the other track on level surface (In such case, this machine is inclined by 10° or more). Please drive the machine with both tracks on level surface.

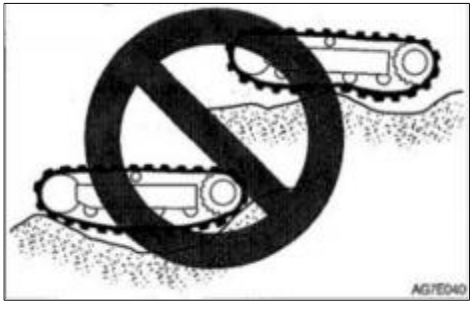



- Do not change the direction when the tracks are loose as shown in the diagram.

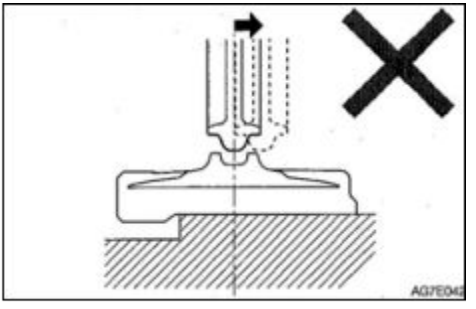

- In such case, the rubber tracks will fall off ifthe machine drives backward.

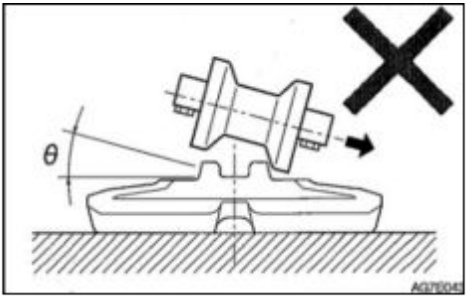

- In such case, the rubber tracks will fall off ifthe machine slews.

Transportation 

Loading and Unloading

Warning

The machine will probably roll over or fall off during unloading. Ensure to take the following safety measures:

- Select a solid and level ground and keep a sufficient spacing from the road curb.
- Fix the ramps of sufficient strength and dimensions to the cargo body of truck.

  The inclination of the ramps shall not exceed 15°. If the ramps deflect downward excessively, please support the ramps by supports or cushion blocks.
- Do not load or unload the machine by working device. Otherwise, it will probably result in rollover or falloff of machine.
- Keep the truck cargo body and the ramps clean without oil, sand, ice/snow, or other impurity, in order to prevent the sideslip of machine. Clean the tracks.
- Block the wheels of transport truck by wedges to prevent movement.
- While loading or unloading the machine, drive the machine slowly in 1st gear (low speed) as per the signals of the signaler.
- Do not change direction on ramps.
- Do not slew/swing on ramps. Otherwise the machine will probably roll over.
- Slewing/swinging the machine on the cargo body of truck will probably result in unstable legs of machine. Therefore, operate slowly.
- If possible, lock the cab doors after loading. Otherwise the cab doors will probably open during the transport.
- Plug securely the tracks by wedges and then fix the machine to the truck cargo body securely by ropes or chains.

During the loading or unloading of machine, please ensure to use ramps or platform and abide by following procedures.

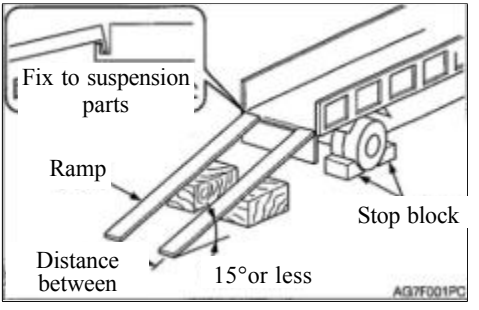

1. Securely apply the parking device of transport truck and block the wheels by wedges.
2. Place the ramps securely onto the truck cargo body. The inclination of the ramps shall not exceed 15°.

3. Align the center of truck cargo body with the center of machine and align the center oframps with center oftracks.
4. Ensure that the bulldozing blade will not touch the ramps.
5. Lower the bucket working device as low as possible and take cautions not to impact it with the transport truck.
6. Reduce engine speed.

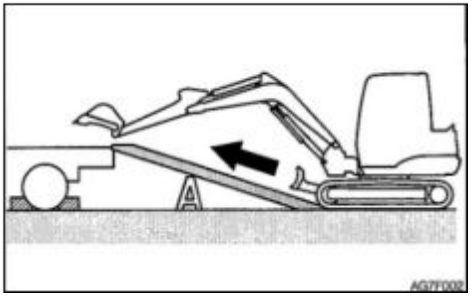

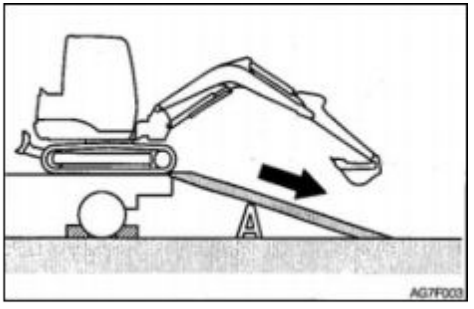

7. According to the signaler's signals, drive the machine straightly up or down along the ramps in 1st gear (low speed).
8. Load the machine to designated position of transport truck. Refer to "Transport Status" in page 4-6 for details.

Lifting of Machine

Warning

- Master and use the correct lifting signals.
- Daily check the lifting device for damaged and missing parts and when necessary replace.
- Please use the ropes of sufficient capacity for the machine weight during lifting.
- Lift the machine as per the procedure described below. Do not operate by any other method. This is really dangerous as it will probably result in imbalance of machine.
- Do not operate the lifting if there is any operator on the machine.
- Operate slowly during lifting to prevent the rollover of machine.
- During lifting, keep all personnel away from working zone. Do not move the machine over any person.

Important: This lifting method is applicable for the models with standard overall parameters. The gravity center varies

Depending on the installed attachments and optional devices.
To understand more details, please contact your Kenstone service dealer.

Lifting

1. Slew the superstructure to place the bulldozing blade behind the machine (Adjust the superstructure to be parallel with track frame).
2. Lift the bulldozing blade to highest position.
3. Sufficiently extend the bucket cylinder and bucket arm cylinder and lift the boom to highest position.
4. If the boom swings leftward or rightward, adjust it to neutral position.
5. Raise the safety lock control lever to the locking position.
6. Stop the engine, withdraw the starter key, and leave the machine.
7. Install the ropes as shown in diagram below. Install the ropes and lifting appliance and take caution to keep them away from machine body.
8. Slowly lift the machine, till it's off the ground.
9. Stop the lifting till the machine becomes stable and then lift the machine again.

Important: The lifting hole on the cab ceiling can only be used to lift the cab, and it is prohibited to lift the vehicle to avoid accidents!

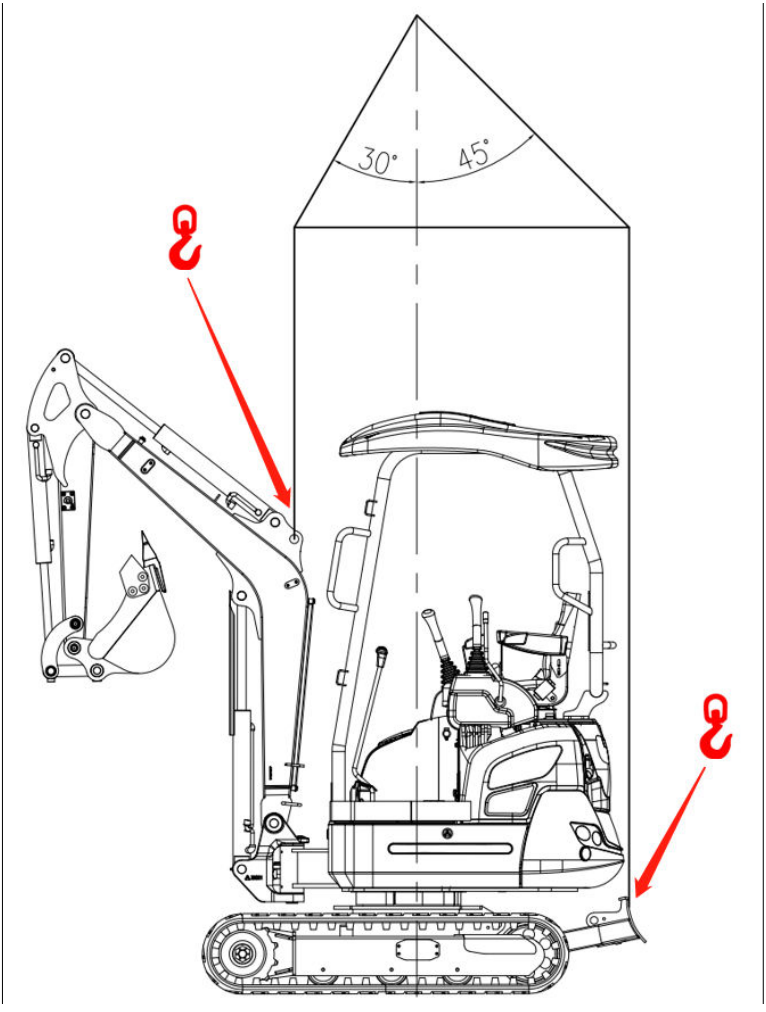

Instructions:
1. When hoisting the vehicle, hook the lifting hook to the lifting hole of the boom and the lifting hole of the front shovel.
2. Please use the spreader with CE certification mark to lift the vehicle.

Fixing of Machine

After loading the machine to designated position, fix as per following requirements.

Transport Status

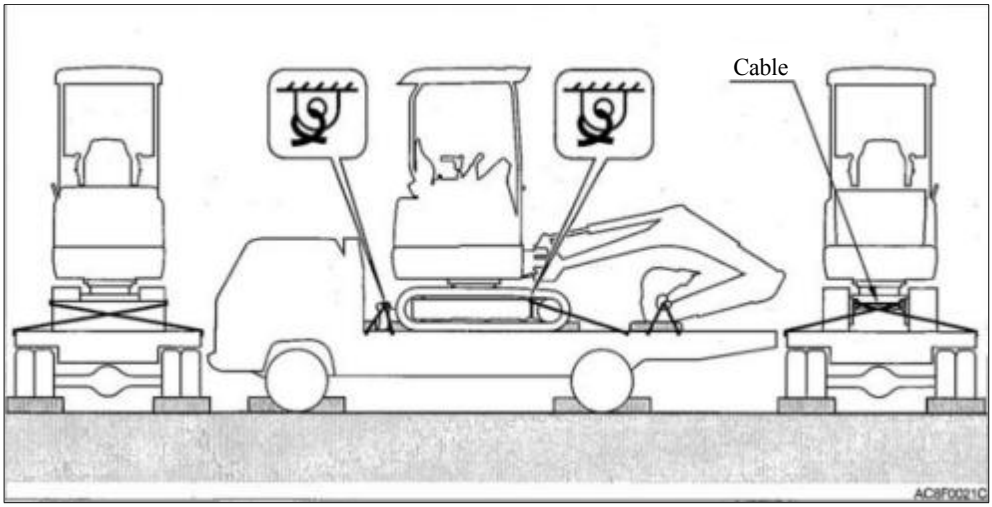

1. Lower the bulldozing blade.
2. Sufficiently extend the bucket cylinder and bucket arm cylinder and then lower the boom.
3. Lift up the safety lock handle to the locking position.
4. Stop the engine, withdraw the starter key, and lock all locks.
5. Place the stop blocks (Wedges) on the front and rear oftracks.
6. Affix chains or ropes securely to the lower framework of machine, in order to prevent the sideslip ofmachine.
7. Fix the bucket by chains or ropes.

Important: A wood board can be placed beneath the bucket to prevent damaging the ground by the bucket.

Safety Measures Taken during Transport

⚠ Warning

- During the transport of machine, understand and abide by all applicable safety rules, vehicle codes, and traffic regulations.
- Take the length, width, height, and weight of the transport truck with loaded machine into consideration, in order to select the best transport route.
- During the transport, do not start up or stop the transport truck suddenly or drive at high speed. Otherwise, it will result in movement or unbalance of loaded machine.

Maintenances



Overview

Maintenance Overview

To maintain the good status and long-term serviceability of the machine, please fulfill the checking and maintenances correctly and safely abide by the procedures recommended by this manual.

Based on the total operating time of the machine, the checking and maintenance items can be divided into several groups: Every 10h (Walk-around checking and daily routine checking), every 50h, and every 250h. Please refer to the reading of hourmeter to determine the checking and maintenance timing. The items for which the checking and maintenance intervals can't be determined are listed in column "As necessary".

When the machine is operated in extremely severe environment (Dusty or high temperature environment), fulfill the checking and maintenance ahead of the periods specified by maintenance schedule.

Maintenance Precautions

Do not fulfill any other checking or maintenance item not listed in this manual.

For the items not listed in this manual, please ask your sales or service dealer for help.

Keeping Machine Clean

- Clean the machine before checking and maintenance. Keep the machine clean.
- Stop the engine before cleaning the machine. Cover the electric parts against water ingress. The water ingress into the electric parts will probably result in short-circuit or malfunction. Do not clean the battery, electronic control units, sensors, connector, or operating room by water or steam.

Fuel, Lubricating Oils, and Greases

- Select fuel, lubricating oils, and greases as per the "Fuel and Lubricant Table".
- Use the water-free fuel, lubricating oil, and grease. Take cautions to eliminate the ingress of dusts during replacement or filling of fuel, lubricating oil, and grease.
- Store the fuel, lubricating oil, and grease in designated location and guard against the ingress ofwater and dusts.

Precautions for Refueling

- If the fuel filler port is installed with a filter screen, do not remove the filter screen during refueling.
- Please ensure to tighten the fuel tank cap after refueling.
- The refueled volume shall not exceed the designated fuel volume.

No Cleaning of Engine Parts by Fuel

It's prohibited to clean engine parts by fuel. Use

non-inflammable detergent.

Guard against Ingress of Dusts

The installation and disassembling of parts shall be operated in a dust-free place. Clean the working area and clean the parts to guard against ingress of dusts.

Cleaning of Mounting Surfaces

Keep clean the contact surface of parts during the installation and disassembling. If the sealing grooves of the contact surfaces are damaged, please contact your sales or service dealer for repairs or breakup.

Seal Rings and Split Pins

- Ensure to replace all disassembled seal rings and split pins with new ones.
- Take cautions not to damage or twist any seal ring during installation.

Seal Rings

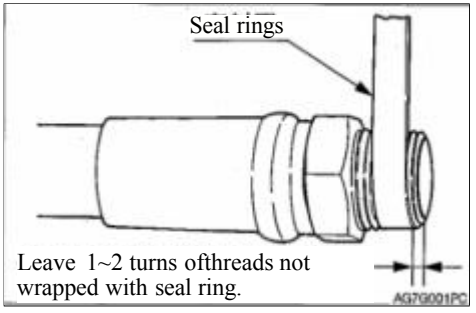

- While wrapping the screw plug with seal ring tape, thoroughly remove the used seal ring tap from the threads and clean the threads.
- Wrap the threads with seal ring and notice to leave 1~2 end threads of screw plug not wrapped with seal ring.

Waste Disposal

- Ensure to collect the drained oil of machine into a container. The improper treatment of waste oil will pollute the environment.
- While disposing harmful objects, including lubricating oil, fuel, coolant, filter, and battery, please abide by the applicable laws and regulations.

Checking after Maintenance

- Accelerate the engine speed gradually from idling speed to fastest speed and check for leakage of oil or water from repaired parts.
- Operate all joysticks and check machine for normal operations.

Precautions for Wire Connections of Battery

- Before operating the electronic system or performing electric welding, disconnect the wires from both electrodes (+ and -) of the battery.
- Ensure to disconnect it from the grounding electrode (-). Finally connect the grounding electrode during connection.
- Do not disconnect the battery wires during the normal running of engine. Otherwise, the rotary converter circuit or other parts will probably be damaged.

Service Data

Fuel and Lubricant Table

Please refer to following table to select appropriate fuel, lubricating oil, and grease based on the temperature.

- Regardless of the specified periods, replace the oil when the oil is too dirty or already deteriorated.
- Never mix the oils of different trademarks while adding fuel/oil. To replace with fuel/oil of other trademark, please replace completely.

Fuel

Specified fuel

The diesel shall meet the following specification. This table lists some diesel specifications available in the world.

<table>
<tr><th>Diesel specification</th><th>Region</th><th>Diesel specifications</th><th>Region</th></tr>
<tr><td>GB252</td><td>China</td><td>JIS K2204, grade 2</td><td>Japan</td></tr>
<tr><td>ASTM D975
No. 1-D, S15
No. 2-D, S15</td><td rowspan="2">USA
Canada</td><td rowspan="2">ISO 8217DMX</td><td rowspan="2">Worldwide</td></tr>
<tr><td>Bio-diesel
Bio-diesel mixture B5
ASTM D6751, D7467</td></tr>
<tr><td>EN590 : 2009</td><td rowspan="2">EU</td><td rowspan="2">BS2869-A1 or A2</td><td rowspan="2">UK</td></tr>
<tr><td>Bio-diesel
Bio-diesel mixture B5
EN14214, EN590</td></tr>
</table>

Fuel tank	Diesel	To maintain the performance and life of engine, please always use clean and high-quality fuel. ● To prevent freezing in cold weathers, please choose diesel still suitable when the actual temperature is less by at least 12℃ than the expected minimum outside temperature. ● Please use diesel with cetane number at 45 or higher. During the operations in low temperature or high altitude regions, use fuel of higher cetane number. ● Use fuel with sulfur content (volume ratio) at <0.5%. Use ultra-low sulfur fuel especially in U.S. and Canada. The use of fuel with high sulfur content can probably result in sulfur acid corrosion in engine cylinders. ● Do not mix the diesel with kerosene, used engine oil, or residual fuel. It's prohibited to use kerosene. ● The low quality fuel will reduce the engine performance and/or damage the engine. ● It's not recommended to use fuel additives. Some fuel additives will deteriorate the engine performances.
		Safety measure for use of bio-diesel The warranty regulation of the engine manufacturer is void for the engine using disqualified or deteriorated bio-diesel.

Lubricant

Position	Type	Type depending on temperature -20 -10 0 10 20 30 40℃	Replacement period
Oil sump	Diesel engine fuel API: grade CD ACEA:E-3,E-4 or E-5	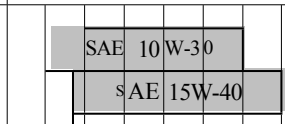	First 50h * Afterwards every 250h
Hydraulic oil tank	Anti-wear hydraulic oil	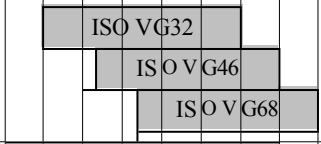	Every 2000h ***
Cooling system	Coolant (Water + coolant) ** SAE: J814C or J1034	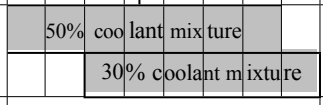	Every 1000h
Traveling reducer gear	Gearbox API: GL-4	SAE 90	First 250h * Afterwards every 1000h
Slewing motor gear	Lithium-base grease EP-2 MLGI 2#	--	Every 50h
Slewing bearing			Every 50h
Working device			Daily or every 10h
Arm			As necessary

*: If the traveling time accounts for a high ratio of the total operating time, replace the gear oil ahead of the specified periods.

**: Use running water (soft water). Do not use well water or river water. Ifthe outside temperature is <0℃, add coolant (antifreeze). Determine the mixture ratio as per the coolant manufacturer's instructions.

***: The replacement period of hydraulic oil depends on the type of hydraulic oil in use. The new machine is filled with Kenstone genuine hydraulic oil 46 at the time of delivery and the hydraulic oil replacement periods described in this manual are based on the use of Kenstone genuine hydraulic oil 46. When common anti-wear hydraulic oil is used, replace the hydraulic oil once every 2,000h.

API: American Petroleum Institute

ACEA: Association des Constructeurs Europeens

SAE: Society ofAutomotive Engineers

Periodical Replacement of Hydraulic Oil

With installed hydraulic breaking hammer, the hydraulic oil deteriorates faster than the common digging operations. Ensure to replace the hydraulic oil and oil return filter element.

- The failure to replace timely will result in damage of machine and breaking hammer hydraulic system. To prolong the lives of hydraulic devices, please timely replace the hydraulic oil and oil return filter element as per the table below.
- During the replacement of hydraulic oil, clean the oil suction filter screen.

Replacement period (Hour)

Item	Hydraulic oil	Filter element
1st time	--	25
2nd time	--	100
Periodic	1200(600)	200

By taking the breaking hammer operating ratio of 100% for instance. Refer to “Hydraulic Breaking Hammer” in page 8-6 for details.

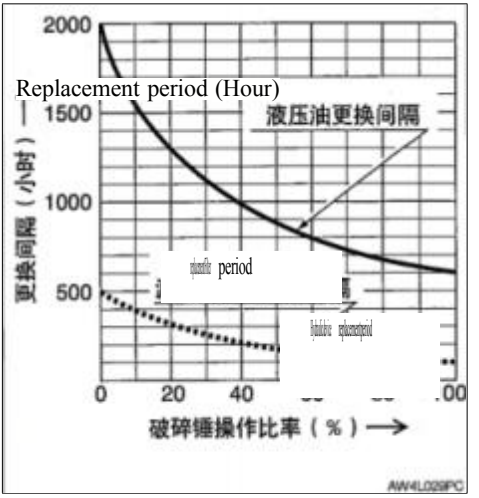

( ): For the use of common anti-wear hydraulic oil.

List of Wearing Parts

Periodically replace the wearing parts, including filters and filter elements, as per the table below.

System	Item	Part name	Replacement period
Hydraulic system	Hydraulic oil return filter	Filter element	Replace after first 50 hours, then every 500 hours
Hydraulic system	Ventilator		Every 1000h
Engine lubrication system	Engine oil filter	Filter cartridge	Replace after first 50 hours, then every 500 hours
Fuel system	Water separator	Filter element	Every 500h
	Fuel filter	Filter cartridge	Every 250h
Air filter system	Air filter	Primary (Outer) filter element	Every 1,000h or 6 cleaning cycles (Whichever comes first)
		Secondary (Inner) filter element	At replacement of primary filter element

List of Tools (If installed)

S/N	Name and specification	List of tools Unit	Quantity	Remark
1	Tool box	PCs	1	
2	Socket hex. wrench (4mm)	Piece	1	
3	Socket hex. wrench (5mm)	Piece	1	
4	Socket hex. wrench (6mm)	Piece	1	
5	Socket hex. wrench (8mm)	Piece	1	
6	Socket hex. wrench (10mm)	Piece	1	
7	Socket hex. wrench (12mm)	Piece	1	
8	Stud dead spanner22*24	Piece	1	
9	Stud dead spanner 27*30	Piece	1	
10	Stud dead spanner 30*32	Piece	1	
11	Stud dead spanner 36*41	Piece	1	
12	Combination wrench, 8mm	Piece	1	
13	Combination wrench 10mm	Piece	1	
14	Combination wrench 12mm	Piece	1	
15	Combination wrench 13mm	Piece	1	
16	Combination wrench 14mm	Piece	1	
17	Combination wrench 15mm	Piece	1	
18	Combination wrench 16mm	Piece	1	
19	Combination wrench 17mm	Piece	1	
20	Combination wrench 18mm	Piece	1	
21	Combination wrench 19mm	Piece	1	
22	Socket head, 10mm	Piece	1	
23	Socket head 11mm	Piece	1	
24	Socket head 12mm	Piece	1	
25	Socket head 13mm	Piece	1	
26	Socket head 14mm	Piece	1	
27	Socket head 15mm	Piece	1	
28	Socket head 16mm	Piece	1	
29	Socket head 17mm	Piece	1	
30	Socket head 18mm	Piece	1	
31	Socket head 19mm	Piece	1	Extended socket head
32	Socket head 21mm	Piece	1	
33	Socket head 22mm	Piece	1	
34	Socket head 24mm	Piece	1	
35	Socket head 27mm	Piece	1	
36	Socket head 30mm	Piece	1	Changed to 30mm
37	Curved extension rod, 12.5mm	Piece	1	
38	Short extension rod, 12.5mm	Piece	2	One long and one short eac
39	Wire cutter, 200mm	Piece	1	
40	Nipper pliers, 200mm	Piece	1	
41	Ratchet wheel handle, 12.5mm	Piece	1	
42	Adjustable wrench, 300mm	Piece	1	
43	Ball hammer, 1.5pon	Piece	1	
44	Straight screwdriver, 200mm*8mm	Piece	1	
45	Phillips screwdriver, 200mm*8mm	Piece	1	
46	Grease gun, 400g	Piece	1	
47	Belt wrench, 60-140mm	Set	1	

Table of Tightening Torques

Nuts and Bolts (Grade ISO10.9)

Unless otherwise specified, tighten the nuts and bolts to the torques listed in table below.

- The tightening torques for installation of plastic caps are not listed in the table below. To understand more details, please consult with your sales or service dealer. The excessive tightening torque will cause damages.
- Ifthe replacement is required, replace with nuts and bolts of same dimensions and specifications.

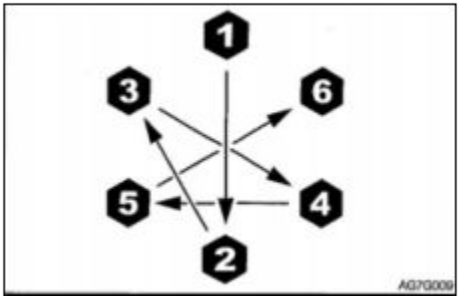

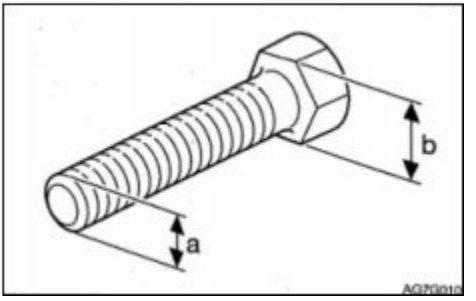

Category	Width across flats (b)	Dimension (a) X pitch	Tightening torque	
			Common connection	
	mm	mm	N·m	Ft-lb
Coarse thread	10	M6 X 1.0	9,8 ±0,5	7, 2±0,4
	12, 13	M8 X 1.25	22,6±1,1	16,6±0,8
	14, 17	M10 X 1.5	47,1±2,4	34, 7 ±1,7
	17,19	M12 X 1.75	83,4±4,1	61,5±3,0
	19, 22	M14 X 2,0	134,4±6,7	99,1±4,9
	22, 24	M16 X 2.0	207,9±10,4	153, 3 ±7, 7
	27, 30	M20 X 2, 5	410,9±20,5	303,1 ±15, 1
Fine thread	12, 13	M8 X 1.0	24,5±1,2	18,1±0,9
	14, 17	M10 X 1.25	50±2, 5	36,9±1,8
	17, 19	M12 X 1.5	87,3±4,3	64,4 ±3, 2
	19, 22	M14 X 1.5	135, 3±6,8	99,8±5,0
	22, 24	M16 X 1.5	220,6±11	162,7 ±8, 1
	27, 30	M20 X 1.5	452, 1 ±22,6	333,4 ±16, 6

Critical Safety Parts

To operate the machine safely, please fulfill the periodical checking and maintenances. The following critical safety parts shall be replaced periodically to improve safety. These parts can cause serious injuries or fire accident if they are damaged.

List of Critical Safety Parts

Vehicle body		Periodically replaced critical safety part	Replacement period
Fuel system		Fuel pipes	Every 2 years
		Packing on fuel tank cover	
Heater		Heater hoses	
Cooling system		Rubber hoses	
Hydraulic system	**Main machine**	Hydraulic pipe (Pump outlet)	
		Hydraulic pipe (Pump oil suction port)	
		Hydraulic pipe (Slewing motor)	
		Hydraulic pipe (Traveling motor)	
	Working device	Hydraulic pipe (Boom cylinder pipeline)	
		Hydraulic pipe (Bucket arm cylinder pipeline)	
		Hydraulic pipe (Bucket cylinder pipeline)	
		Hydraulic pipe (Swing cylinder)	
		Hydraulic pipe (Bulldozing blade cylinder)	
		Hydraulic pipe (Span cylinder)	
		Hydraulic pipe (Pilot valve)	
		Hydraulic pipe (Auxiliary pipeline)	
		Seat Belt	Every 3 years
		Antiskid plate	

The materials of the above-mentioned critical safety parts will deteriorate along with time to cause wear or deteriorated performance. It's difficult to determine the deterioration extent during periodical checking. Therefore, such parts shall be replaced with new ones to guarantee stable performance, even if such parts are still working well. Please be noted that, regardless of the replacement schedule, any part with wear symptom must be replaced immediately. Upon detection of any deformed or cracked pipe clamp, immediately replace it together with hose. Please consult with your sales or service dealer for the replacement of safety parts.

Except the critical safety parts, check and tighten the hydraulic pipes and when necessary replace. During the replacement of hydraulic pipes, replace the O-ring and seal ring as well.

Check the fuel and hydraulic pipes as per the schedule specified by the following table.

Refer to "Maintenance".

Checking type	Checking item
Daily routine checking	Leakage of hydraulic or fuel pipe connector Damage of cab or shelter - Replace *
Monthly checking	Leakage of hydraulic or fuel pipe connector Damage (Cracking, wear, and tear) of hydraulic or fuel pipe
Yearly checking	Leakage of hydraulic or fuel pipe connector Aging, distortion, and damage (Cracking, wear, and tear) of hydraulic or fuel pipe and/or status of hose in contact with other machine parts

<Applicable model RH18>

<Applicable model RH20>

*Roof part number:0301080105



Maintenance List

Checking and maintenance item	Page
Walk-Around Checking	
Opening of engine hood and machine hood for checking	5-16
Walk-around checking ofmachine	5-16
Checking in driver seat	5-16
Daily routine checking (Every 10h)	
Checking and adding of coolant	5-17
Checking and adding of engine oil	5-18
Checking of Fuel-Water Separator	5-19
Checking of fuel level	5-18
Checking of hydraulic oil tank oil level and adding of oil	5-10
Lubrication of Working Device	5-21
After first 20h (For new machine only)	
Checking and adjustment of fan belt	5-23
Replacement of hydraulic oil return filter	5-24
Every 50h	
Checking and adjustment of track tension	5-26
Lubrication of slewing bearing	5-28
Water drainage from fuel tank	5-29
Checking of battery electrolyte level and adding of electrolyte	5-30
Every 100h	
Cleaning of water separator	5-31
After first 250h (For new machine only)	
Replacement of traveling motor gear oil *	5-32
Every 250h	
Checking and adjustment of fan belt	5-33
Replacement of engine oil and filter	5-33
Cleaning of air filter	5-34
Checking of accelerator control system	5-35
Cleaning ofradiator fins and oil cooler fins	5-36
Replacement of fuel filter	5-36
Cleaning of air filter	5-34

*: If the traveling time accounts for a high ratio of the total operating time, replace the gear oil ahead of the specified periods.

Maintenance List

Check and maintain items	Page
Every 500 hours	
Replace the hydraulic oil return filter	5-24
Replace the water separation filter	5-37
Every 1000 hours	
Replace the travelling motor gear oil *	5-32
Replace the air filter element	5-39
Replace the air breather (if equipped)	5-40
Clean the engine cooling system	5-41
Every 1500 hours	
Check and clean the engine nozzle	5-44
Check the crankcase ventilation system	5-44
Every 2000 hours	
Lap engine seat	5-45
Replace the hydraulic oil and clean the suction filter	5-45
When needed	
Changing bucket teeth	5-47
Change bucket	5-49
Lubricate rod and pedal	5-51
Check the rubber tracks	5-52
Replace the rubber track	5-53
Check and refill glass cleaning solution	5-54

*: If the traveling time accounts for a high ratio of the total operating time, replace the gear oil ahead of the specified periods.

Walk-Around Checking

Fulfill the following checking before the first start of engine each day.

Warning

- Before operations, fulfill the walk-around checking and when necessary repair immediately.
- Before operations within the machine, please securely fix the engine hood or machine hood. Keep the engine hood and machine hood closed under windy weather or while parking the machine on a slop

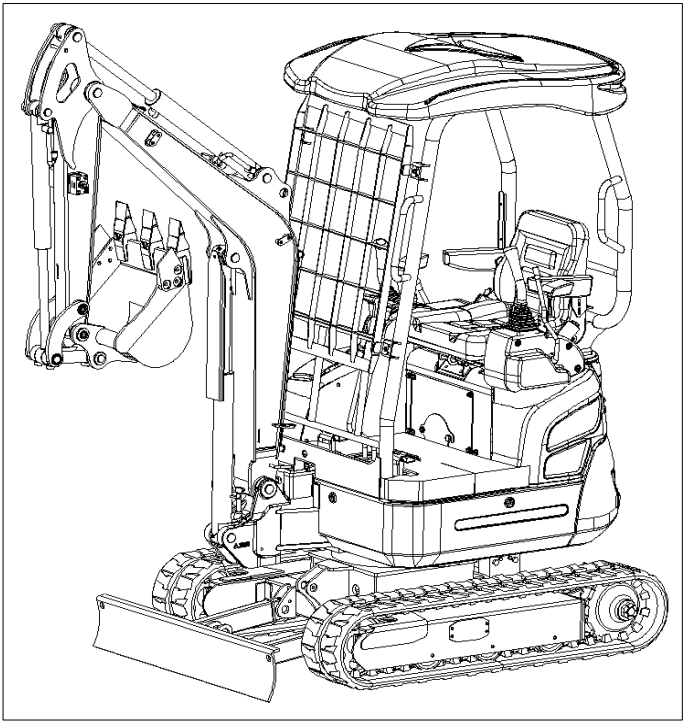

Opening of engine hood and machine hood for checking

1. Check for presence of branches, leaves, oil, and other inflammable around the engine and battery.
2. Check for presence of lubricating oil and coolant leakages around the engine.
3. Check hydraulic oil pipes, hydraulic devices, hoses, and connectors for oil leakage.

Walk-around checking of machine

1. Check lamps for presence of dusts and damages and check lamp bulbs for burnout.
2. Check hydraulic accessories and hoses for damage.
3. Check bucket, bucket teeth, and side teeth for wear, damage, and looseness.
4. Check hook, anti-slip stop block, and hook seat on bucket for presence of damage. (Optional)
5. Check handrails, footplates, and anti-slip surfaces for damage and check for any loose bolt.
6. Check tracks and track shoes for presence of slip, check track carrier rollers, idling device, and sprocket for presence of damage and wear, and check for loose bolt.
7. Check traveling motor for oil leakage.
8. Check shelter and guard plates for damage and check for loose nuts and bolts.
9. Check exterior and interior rearview mirrors for contamination and damage and when necessary adjust.
10. Check labels for presence of dusts and damage.

Checking in Driver Seat

1. Check seat and seat belt for presence of dust and damage.
2. Check driver seat for presence of dust, oil dirt, and other inflammable.
3. Check monitor, electric devices, and switches for oil dirt, dust, and damage.

Daily routine checking (Every 10h)

Fulfill the following checking before the first start of engine each day.

Warning

- Before operations, fulfill the daily routine checking and when necessary repair immediately.
- Before operations within the machine, please securely fix the engine hood or machine hood. Keep the engine hood and machine hood closed under windy weather or while parking the machine on a slope.

Checking and adding of coolant

Warning

- Do not disassemble the radiator cap or drainage plug when the coolant is hot. Stop the engine, wait for the engine and radiator to cool down, and then slowly loosen and take out the radiator cap and drainage plug.
- While handling the coolant (antifreeze), ensure to wear goggles and gloves. In event of splashing of coolant (antifreeze) into your eyes or onto your skin, clean by clean water immediately. Otherwise it will cause injuries.

Checking

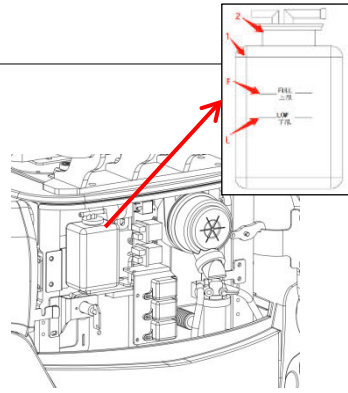

1. Open the engine hood.
2. Check the coolant level in the water tank (1). The coolant level shall be within upper limit (F) and lower limit (L). If below the lower limit (L), add coolant.

Adding

1. Take out the cap (2) of water tank (1).
2. Add coolant, till the coolant level reaches upper limit (F) of water tank (1).

   Upon detection of empty water tank (1) during checking, check for presence of water leakage and then check water level of radiator (3). When necessary, add water to the radiator (3) and then add water to the water tank (1).
3. Install the cap (2).

Note: Add clean water (soft water) only to compensate the lost coolant due to evaporation. Add the coolant (antifreeze) and clean water (soft water) of specified mixing ratio only to

compensate the lost coolant due to leakage.

Checking and adding of engine oil

Warning

Please stop the engine and wait for the machine to cool down before maintenance. .

Checking

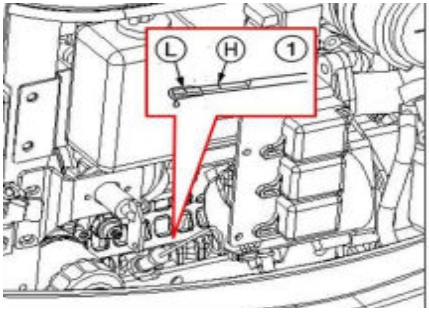

1. Open the engine hood.
2. Withdraw the engine oil dipstick (1) and wipe it dry by a rag.
3. Insert the oil dipstick (1) to the end and then withdraw again.
4. Check the oil on the oil dipstick (1). The oil level shall be within upper limit (H) and lower limit (L). If below the lower limit (L), add oil.

Adding

1. Take out the oil filler cap (2).
2. Add oil till the oil level is within upper limit (H) and lower limit (L) of oil dipstick (1). Both excessive and insufficient oil levels will cause malfunction.
3. Tighten the oil filler cap (2).
4. Start the engine, run at low idling speed for 5min, and then stop the engine.
5. Check the oil level after approximately 10min.

Checking of fuel level

Warning

- Do not smoke or use open fire while handling fuel or performing the operations of fuel system.
- Do not disassemble the fuel tank cap or refuel while the engine is running or is not cooled down. Do not splash fuel to any high temperature surface of machine.
- Refuel the fuel tank in a well-ventilated place.
- Any overflown fuel shall be wiped away immediately.
- Do not top up the fuel tank. Leave an expansion space for the fuel.
- Tighten the fuel tank cap securely.
- Use correct fuel grade based on the season.

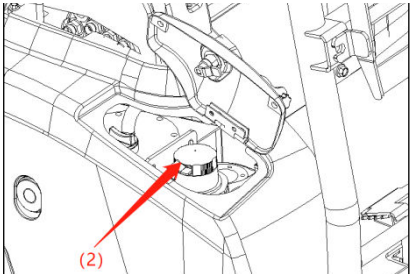

Checking of Fuel-Water Separator

Warning

- Do not smoke or use open fire while handling fuel or performing the operations of fuel system.
- Stop the engine in a well-ventilated place and wait for the machine to cool down before maintenances.
- Any overflown fuel shall be wiped away immediately.

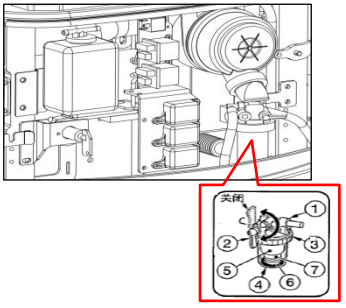

1. Open the engine hood.
2. Checking of Fuel-Water Separator (1).
   If the red indicator ring (6) submerges to the bottom, there is no mixture ofwater.

   If the red indicator ring (6) floats, the water reaches the ring level.

   Drain water and clean.

Checking of hydraulic oil tank oil level and adding of oil

Warning

Disassembling cap or filter or disconnecting pipeline before the pressure relief of hydraulic system will probably result in out-spray of hydraulic oil.

- Slowly loosen the ventilation plug to relieve the internal pressure of tank.

Checking

The oil level varies along with the oil temperature. Maintain the machine and check the fuel status by the posture shown in the diagram below.

- Posture of machine for checking of hydraulic oil level

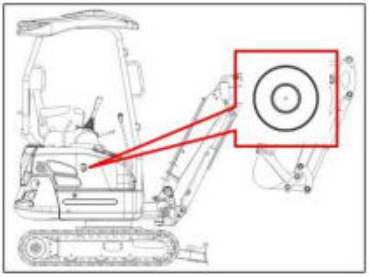

1. Start the engine and run at low speed.
2. Fully extend the track width.
3. Fully retract the cylinders (Bucket arm and bucket cylinders) and lower the bucket onto the ground.
4. Lower the bulldozing blade and then stop the engine.
5. Check the oil level by level gauge (1).
   When the oil temperature is approximately 20℃:

   The oil level shall be within upper limit (H) and lower limit (L).

   If below the lower limit, add oil.

   When the oil temperature is approximately 50~80℃:
   The oil level shall be slightly lower than upper limit.

Adding

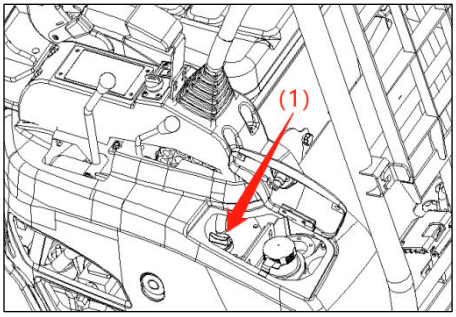

Important: While adding oil, the oil level shall not be above the upper limit (H). Otherwise it will damage the hydraulic circuit or cause oil spray. If the oil level is too high due to carelessness, stop the engine, wait for the hydraulic oil to cool down, and drain the excessive oil from oil drainage port.

Important: Do not forget applying pressure to the hydraulic oil tank, in order to prevent the damage of pump due to air inhalation. (If no ventilator is installed.)

1. Open the cab side door cover and top cover.
2. Slowly loosen the air plug (1) to reduce internal pressure,
Then remove it.
3. Add the hydraulic oil to the middle of the level gauge.
4. Press the hydraulic oil tank as shown below.

Note: For machine with ventilator, no pressurization is required.

Pressurization of Hydraulic Oil Tank

1. Start the engine and run at low speed.
2. Disassemble the bleeding plug (2) and set the safety lock handle to unlocking position.

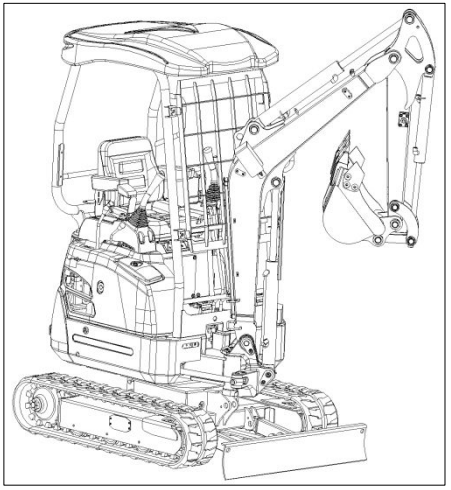

3. Fully extend the bucket, bucket arm, boom, swing, and span cylinders.
4. Stop the engine and lift up the safety lock handle to locking position.
5. Tighten the bleeding plug (2) and then pressurize by retracting cylinders.

Lubrication of Working Device

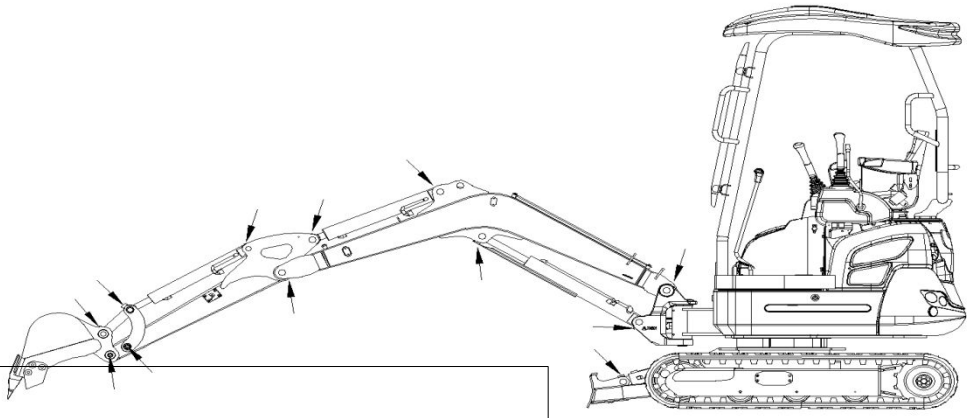

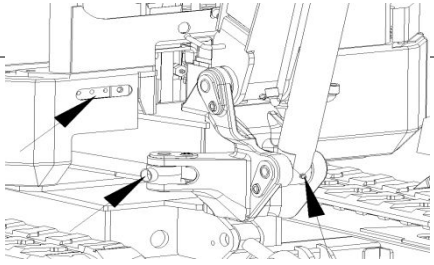

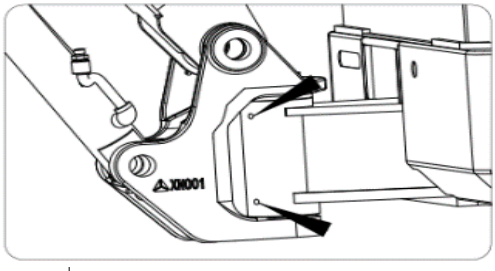

1. Maintain the machine under the status shown in above diagram, lower the working device to the ground, and then stop the engine.
2. Lubricate the grease fitting by a grease gun.
3. Wipe away excessive grease.

After first 50h (For new machine only) Checking and adjustment of fan belt

Warning

Please stop the engine and wait for the machine to cool down before maintenance. .

- The engine, exhaust pipe, radiator, hydraulic pipes, sliding parts, and many other machine parts are really hot when the engine is just stopped. Touching such parts can cause scalding.

Important: A loose belt can cause poor charging of battery, overheating of engine, or earlier wear of belt. The over-tight belt will damage the water pump or bearing and alternator drive belt.

Important: Keep the belts away from all greases.

Checking

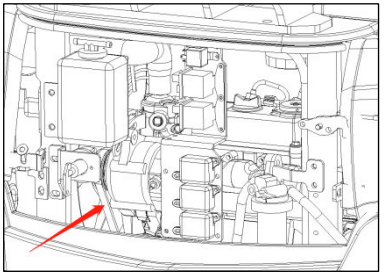

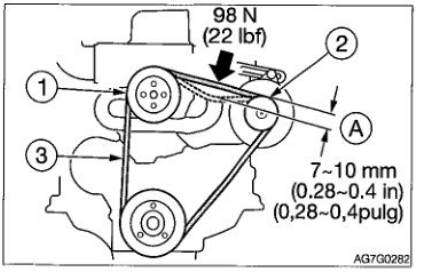

1. Open rear service cover.
2. Check the tension (Approximately 98N) based on the centers of fan pulley (1) and alternator pulley (2).

3. Check the fan belt (3). Upon detection of any of following conditions, replace.

- Rupture or cracking.
- The belt is worn to touch the bottom of pulley V-grooves.
- The belt is stretched loosely and is non-adjustable.

Adjustment

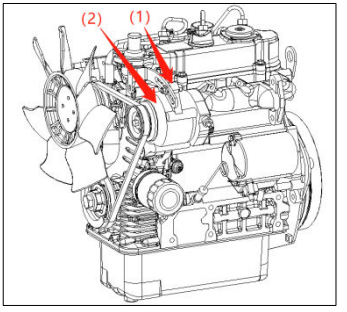

1. Loosen the bolt (5) and lock nut (4).

2. Turn the adjusting bolt (6) to move the generator (7) and adjust the tension of the fan belt (1).

• Tighten: clockwise

• Loosen: counterclockwise

3. Tighten the bolt (5) and lock nut (4).

Note: After the replacement with new belt, run the engine at low idling speed for approximately 3~5min to run in new belt and then adjust the tension.

Replacement of hydraulic oil return filter

Warning

- Please stop the engine and wait for the machine to cool down before maintenance. .
- The engine, hydraulic system, and many other parts are really hot after the stop of engine. Touching such parts can cause scalding.
- The hydraulic oil is also under high temperature and high pressure. Take cautions not to touch the hydraulic oil while loosening engine hood or connector. Operating the machine under such condition will cause out-spray of hot oil to result in scalding and injuries.
- Disassembling cap or filter or disconnecting pipeline before the pressure relief of hydraulic system will probably result in out-spray of hydraulic oil.
- Slowly loosen the bleeding plug to relieve the pressure of oil tank.
- While disassembling connector or plug or disconnecting hose, stand on one side, loosen slowly to gradually relieve internal pressure, and then take out.

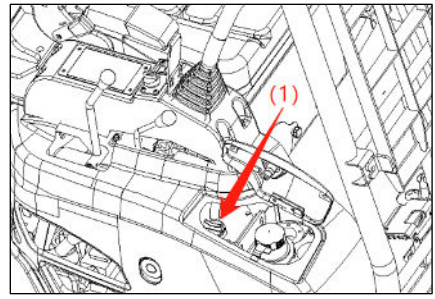

1. Disassemble the right covering part.
2. Slowly loosen the bleeding plug (4) to relieve the internal pressure and then take out the plug.

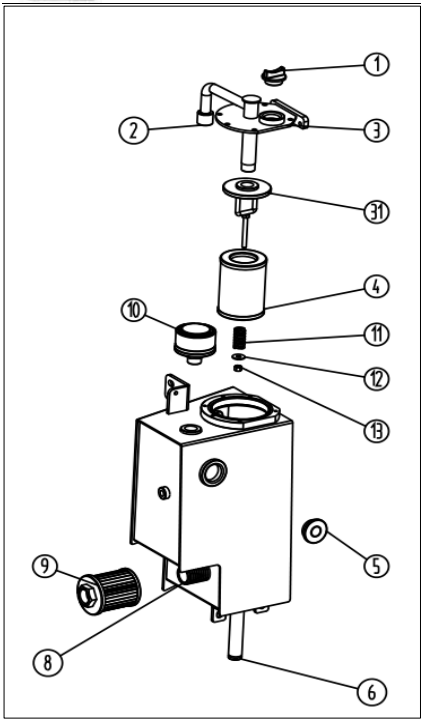

3. Loosen the hose belt and remove the hose from the flange.
4. Loosen the bolt and take out the flange.
5. Remove the return oil filter ⑧.
6. Install a new return oil filter.
7. Reinstall the flange and hose.
8. Check the liquid level using the liquid level gauge (2). If the liquid level is too low, do Replenishment. For details, see "Checking Hydraulics" on pages 5-19 Tank level and refill ".

Note: For machine with ventilator, no pressurization is required.

Replacement of engine oil and filter

Refer to page 5-33“Replacement of engine oil and filter ”.

Every 50h

Checking and Adjustment ofFront Toe-in

Warning

- If it's necessary to operate beneath the lifted machine or working device, always use cushion woods, jack, or other firm and stable supports. Do not access the area beneath the machine or working device before it's firmly supported. This operation is especially important for the hydraulic cylinder operations.

- Guard against high pressure grease. In the track tensioner, the grease is injected under high pressure. If the tension is not adjusted by the following designated procedure, the grease relief valve will probably fly out to cause injuries.

- Never loosen the grease pipe fittings.
- Slowly loosen the grease relief valve. Do not rotate it for >1 turn.
- Do not place your face, arms, legs, or body in front of the grease relief valve.
- If no grease flows out when the grease relief valve is loosened, the valve is malfunctioned. Please contact a Kenstone Heavy Machinery service dealer for repairs.

Checking

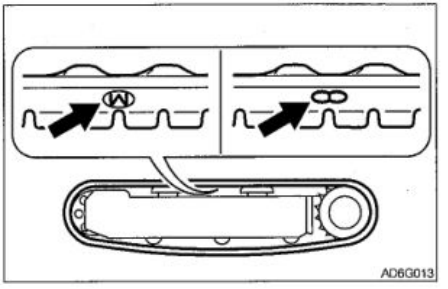

1. For rubber tracks, adjust the marking "M" at the joints to the top center of track frame.

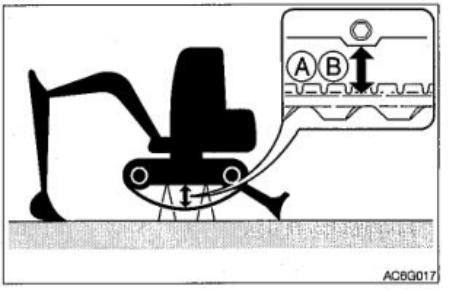

2. Lift the machine body by working device. Slowly operate the joysticks.

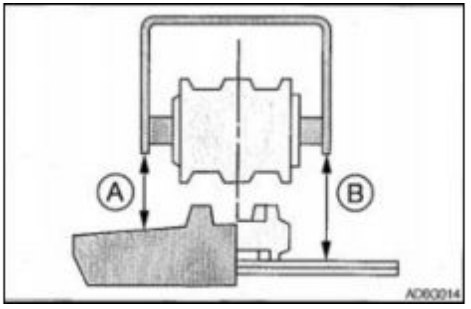

3. Check the clearance (A or B) between the frame bottom face and track top face in the middle oftrack frame. The clearance (A or B) shall be within following range:

   (A) Rubber tracks

   59~64mm

   (B) Steel tracks

   95 to 110mm

Adjustment

Increasing of Tension

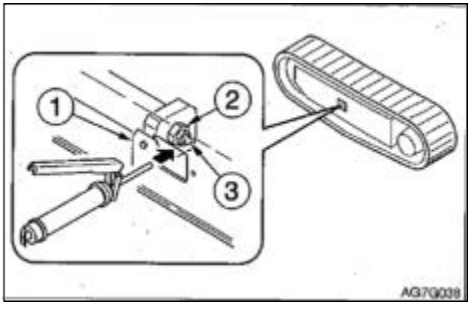

1. Take out the cover plate (1).
2. Use a grease gun to inject lubricating grease via the grease fitting (3) of grease relief valve (2).
3. Check the track tension.

Reduce tension

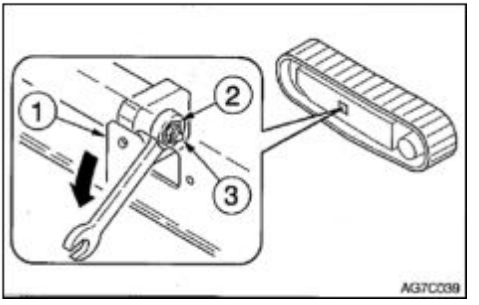

1. Remove the cover plate.
2. Slowly loosen (by one turn) the grease relief valve (2) by a wrench to drain the grease. If it's difficult to drain the grease, drive the machine back and forth.
3. Tighten the grease relief valve (2).
   • Tightening torque: 177 N·M

Lubricate the slewing bearing

⚠ Warning

Do not slew during lubrication. Otherwise, you will probably be entangled into the machine, which is really dangerous.

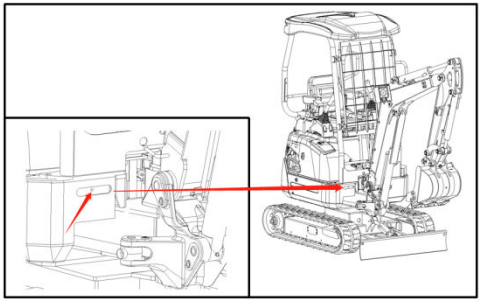

1. Stop the machine as per the posture shown in above diagram and stop the engine.
2. Lubricate the grease fitting (1) by a grease gun.

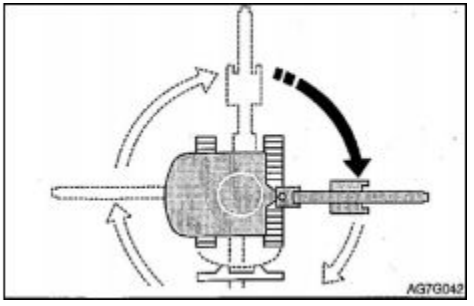

3. Start the engine, lift the bucket, and rotate clockwise for 90°.
4. Lower the bucket onto the ground and then stop the engine.
5. Repeat above steps 2~4 for 3 times.
6. Wipe away the grease drained from the slewing bearing and grease pipe.

Water drainage from fuel tank

Warning

- Do not smoke or use open fire while handling fuel or performing the operations of fuel system.
- Do not disassemble the fuel tank cap or refuel while the engine is running or is not cooled down. Do not splash fuel to any high temperature surface of machine.

  Refuel the fuel tank in a well-ventilated place.
- Do not top up the fuel tank. Leave an expansion space for the fuel.
- Any overflown fuel shall be wiped away immediately.
- Tighten the fuel tank cap securely.
- Use the right fuel grade for the season.

- **Use correct fuel grade based on the season.**

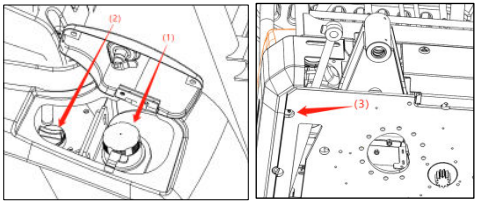

1. Slew the superstructure to a position easy for water drainage.
2. Take out the fuel tank cap (3).
3. Place a box beneath the water drainage plug (5).
4. Loosen the water drainage plug (5) to fully drain the water and the deposits from the tank.
5. Tighten the water drainage plug (5).
6. Tighten and lock the fuel tank cap (4).
7. Bleed the air.

Air Bleeding of Fuel System

Refer to page 6-8"Air Bleeding from Fuel System ".

Note: The air content in the fuel system will cause start failure or start difficulty of engine. Bleed the air by same procedure described above when the fuel tank is empty.

Checking of battery electrolyte level and adding of electrolyte

Danger

- Do not use the battery when the electrolyte level is below the lower limit. Otherwise it will speed up the internal aging and shorten the life of battery. In addition, it can lead to burst (explosion).
- The battery can generate inflammable hydrogen to probably cause explosion. Keep away from fire sources including open fire, spark, and ignited cigarette.
- Clean the area above electrolyte level marking by a wet cloth and check the level. Do not clean by a dry cloth, otherwise it can cause electrostatic accumulation and combustion or explosion.

Warning

- During the operations of battery, wear goggles and protective clothing.
- Do not fill the distilled water till the level is above the upper limit. Otherwise the electrolyte will leak out. The contact with such electrolyte can harm your skin or corrode the machine parts.
- The battery contains sulfur acid. The accidental touch will harm your eyes or

skin.

- In event of accidental contact with eyes, immediately flush by clean water and quickly seek for medical treatment.
- In event of accidental swallowing, drink a lot of water or milk and immediately seek for medical treatment.
- If the sulfur acid comes into contact with your skin or clothing, immediately flush by a lot of water.

Checking

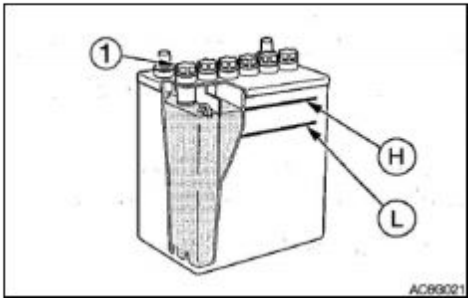

1. Open the service cover.
2. Check the fluid level. The fluid level must be between upper limit (H) and lower limit (L). If not, add distilled water till the fluid level reaches upper limit (H).
3. Check terminals for looseness and contamination.

Adding

If the adding of distilled water is required, add water before start of operations, in order to prevent freezing.

1. Take out the cap (1) and add distilled water till the upper limit (H) is reached.
2. Clean the ventilation port on the cap and securely tighten the cap (1).

Every 100h

Cleaning ofwater separator

Warning

- Do not smoke or use open fire while handling fuel or performing the operations of fuel system.
- Stop the engine in a well-ventilated place and wait for the machine to cool down before maintenances.
- Any overflown fuel shall be wiped away immediately.

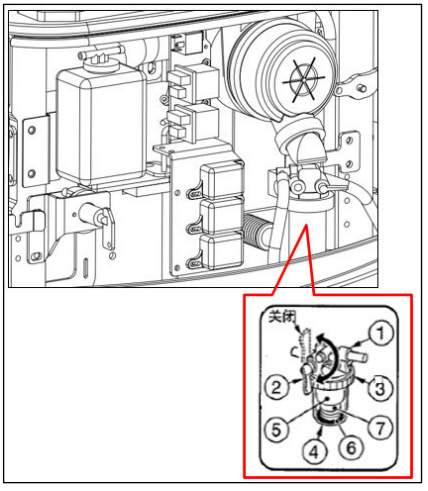

1. Open rear access cover.
2. Close valve (2).
3. Loosen the ring (3) and then take out and clean the box (4), filter element (5), indicator ring (6), and spring (7).
4. Check the O-ring and filter element (5). Upon detection of any scratch or other unevenness, replace.
5. Install the indicator ring (6), spring (7), filter element (5), and box (4) and then tighten the ring (3).
6. Open valve (2) to vacuumize.

Refer to page 6-8“Air Bleeding from Fuel System ”.

After first 250h (For new machine only)

Replacement of traveling motor gear oil

Warning

- Please stop the engine and wait for the machine to cool down before maintenance. .
- The traveling motor is really hot when the engine is just stopped. Touching it will cause scalding.
- The gear oil is also under high temperature and high pressure when the engine is just stopped. Take cautions while loosening the screw plug. Operating the machine in such case will cause scalding and injuries.
- The high pressure in the traveling motor reducer gearbox will cause fly-out of gear oil or screw plug. Slowly loosen the screw plug to relieve the pressure.

Important:

If the proportion of walking time in the total operation time is relatively large High, the gear oil should be replaced in advance of the specified time.

Every 250-hour

Checking and adjustment of fan belt

Refer to page 5-23 “Checking and adjustment of fan belt ”.

Replacement of engine oil and filter

Warning

Please stop the engine and wait for the machine to cool down before maintenance. .

- The engine, exhaust pipe, radiator, hydraulic pipes, sliding parts, and many other machine parts are really hot when the engine is just stopped. Touching such parts can cause scalding.
- The engine oil is really hot. Take cautions not to touch the hydraulic oil while loosening engine hood or connector. Operating the machine in such case will cause scalding and injuries.

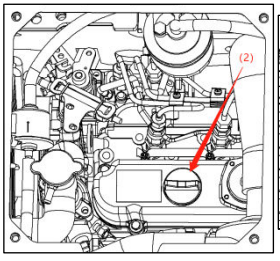

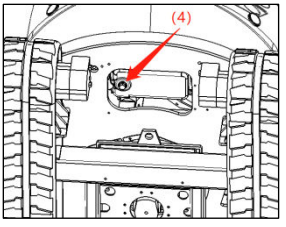

1. Open the engine hood and take out the oil filler port (2).
2. Place a tray beneath the oil drainage plug (2) to collect the drained oil.
3. Remove the drain plug (4) by turning it counterclockwise.
4. Remove the filter (3) by turning it counterclockwise with the oil filter wrench.

Important: Check the used oil for presence of metal particles. Upon detection of numerous metal particles, please consult with your sales or service dealer.

5. Clean the mounting surface of the filter housing.
6. Apply a thin coat of oil to the washer of the new filter
7. Install the new filter manually..
8. After the washer of filter comes into contact with the mounting surface, tighten the filter further for one turn (by oil filter wrench). (Tightening torque by oil filter wrench: 19.6~23.5N.m).

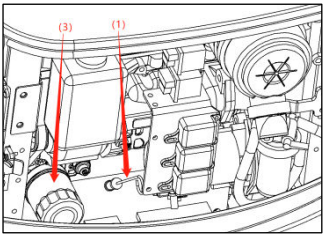

9. Add lubricating oil till the oil level is within upper limit (H) and lower limit (L) of oil dipstick (1). Both excessive and insufficient oil levels can cause malfunctions.
10. Tighten the filler cap.
11. Start the engine and run at low idling speed for 5min.
12. Check the oil level after approximately 10min.

Cleaning of Air Filter

Warning

- Please stop the engine and wait for the machine to cool down before maintenance.
- The engine, exhaust pipe, radiator, and many other machine parts are really hot when the engine is just stopped. Touching them will cause scalding.
- While using compressed air, please wear necessary protection appliances, including goggles and filtration mask, as the metal fragments and other objects will splash to cause accidents of serious harms.

Important: Take cautions not to scratch the filter element. Do not use any damaged filter element.

Important: During the operations under dusty environment, please daily fulfill the checking and maintenances for the machine.

Important: Ensure to steadily install the filter element and dust cover. Otherwise, the ingress of dusts into the cylinders will damage the engine.

1. Open the engine hood.

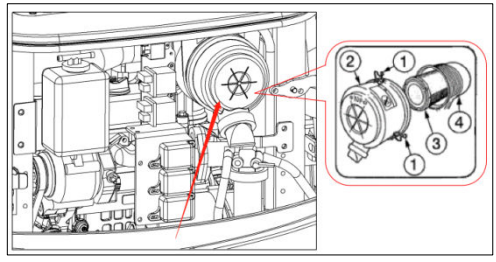

2. Loosen the clamp (1) and take out the dust collector (2).

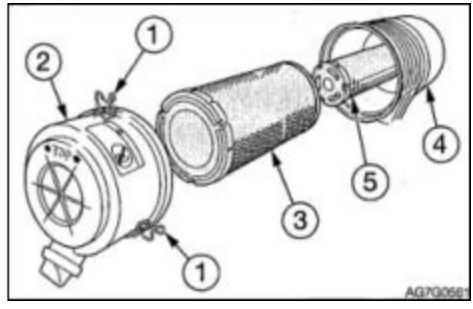

3. Clean the inside of dust collector (2).
4. Take out the primary filter element (3).
5. Cover the inlet and outlet on the back of

body (4) by cloth or tape to guard against ingress of dusts.

<If the secondary filter element is installed>

To prevent the ingress of dusts into engine, do not take out the secondary filter element (5).

6. Clean the inside of housing (4).

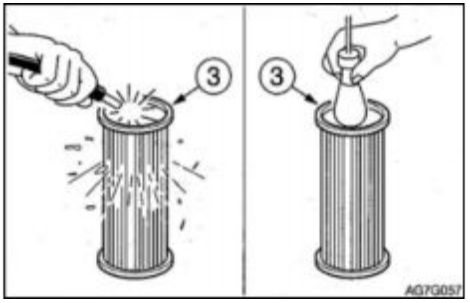

7. Clean primary filter element (3) by dry compressed air (294~490kPa). Firstly, blow along the wrinkles from the inside of filter element. Then blow from outside and finally blow from inside.

8. Illuminate the inside of primary filter element (3) by a lamp to check. Upon detection of any pinhole or dirt, replace.

9. Remove the cloth or tape used in step 5.

10. Install the primary filter element (3).

11. Install the dust collector (2) by facing upward the "↑TOP↑" and then secure it by clamp (1).

Checking of accelerator control system

The accelerator joystick and the speed regulator on the engine side are connected by wiring. Check the wires at their fixing positions for presence of stretching and looseness.

If the wires at their fixing positions are stretched or loose, there probably has a malfunction.

The replacement and adjustment of wires require experiences. Please ask your sales or service dealer for operations.

Cleaning of radiator fins and oil cooler fins

⚠ Warning

While using compressed air, please wear necessary protection appliances, including goggles and filtration mask, as the metal fragments and other objects will splash to cause accidents of serious harms.

Important: Take cautions not to damage the radiator fins during cleaning.

- While using compressed air or high pressure water, ensure that the pressure is no higher than 200kPa and keep the air nozzle from the radiator for a sufficient spacing.

Important: While cleaning by water, please cover the electric system against water

ingress.

Important: Important: During the operations under dusty environment, please daily fulfill the checking and maintenances for the machine.

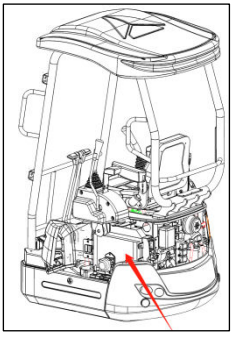

1. Open the side cap.
2. Blow compressed air towards the radiator fins to remove the adhered dusts and mud.

Replacement of Fuel Filter

Warning

- Do not smoke or use open fire while handling fuel or performing the operations of fuel system.
- Stop the engine in a well-ventilated place and wait for the machine to cool down before maintenances.
- Any overflown fuel shall be wiped away immediately.

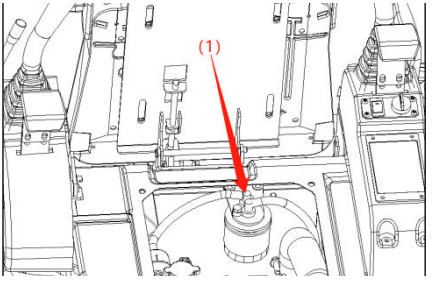

1. Open the engine hood.
2. Rotate the filter (1) counter-clockwise by a filter wrench to take it out.
3. Clean the mounting surfaces of filter housing.
4. Apply a thin film of fuel to the washer of new filter housing.
5. Manually install new filter.
6. After the filter washer comes into contact with the mounting surface, tighten the filter further for one turn.

   (Tightening torque by filter wrench: 20~24N.m).
7. Bleed the air.

Refer to page 6-8“Air Bleeding from Fuel System ”.

Every 500-hour

Replacement of Hydraulic Oil Tank Return Filter

Refer to page 5-24 “Replacement of Hydraulic Oil Tank Return Filter”.

Replacement of Water Separator Filter

Warning

- **Do not smoke or use open fire while handling fuel or performing the operations of fuel system.**
- **Stop the engine in a well-ventilated place and wait for the machine to cool down before maintenances.**
- **Any overflown fuel shall be wiped away immediately.**

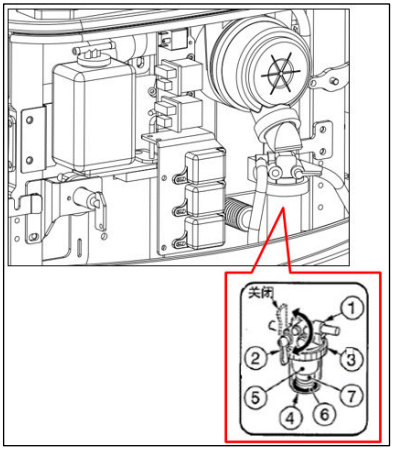

1. Opening of Side Gate
2. Close valve (2).
3. Loosen the ring (3) and take out the box (4).
4. Take out the spring (7) and indicator ring (6) from the box (4).
5. Clean the box (4).
6. Check the O-ring. Upon detection of any scratch or other unevenness, replace.
7. Replace with new filter element.
8. Install the indicator ring (6) and spring (7) to the box (4).
9. Install the box (4) to the bracket and manually tighten the ring (3).
10. Open valve (2) to vacuumize.

Refer to page 6-8“Air Bleeding from Fuel System ”.

Records

Every 1000h

Replacement of traveling motor gear oil

Refer to page 5-32"Replacement of traveling motor gear oil ".

Replace the air filter element

Warning

Please stop the engine and wait for the machine to cool down before maintenance. .

- The engine, exhaust pipe, radiator, and many other machine parts are really hot

  when the engine is just stopped. Touching such parts can cause scalding.

Important: Do not use a wrinkled filter element or a filter element with damaged washer or seal ring.

Important: Ensure to steadily install the filter element and dust cover. Otherwise, the ingress of dusts into the cylinders will damage the engine.

1. Open the engine hood.

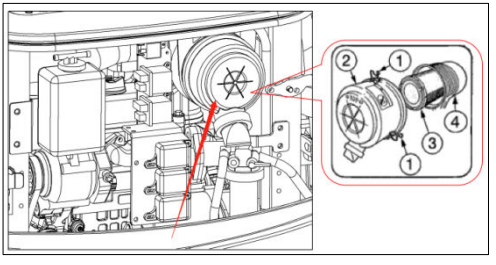

2. Loosen the clamp (1) and take out the dust collector (2).
3. Clean the inside of dust collector (2).

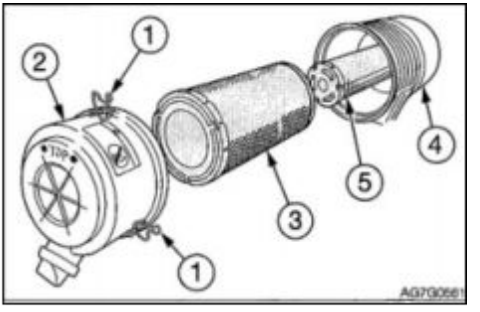

4. Take out the primary filter element (3).
5. Remove the main filter element (3).
6. Cover the entry port on the back of the body (4) with cloth or tape to prevent dust from entering.
7. Clean the inside of housing (4).
8. Remove the cloth or tape used in step 5.
9. Install new filter element.
10. Install the dust collector (2) by facing upward the "↑TOP↑" and then secure it by clamp (1).

Every 1000 hours

Replace the air breather (if equipped)

Warning

Before the hydraulic system depressurizes, hydraulic oil may be expelled if the cover or filter is removed or the pipe is disconnected.

- Slowly release the vent plug to relieve pressure inside the chamber.

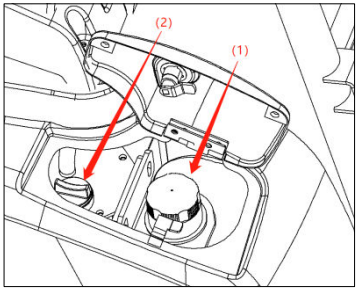

1. Open gas tank cap/hydraulic tank cap.

2. The hydraulic oil counterclockwise (2) to alleviate the pressure in the cabinet, then remove the plug.

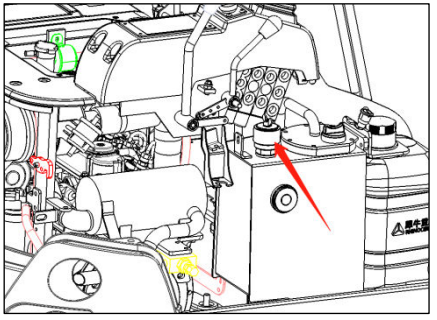

3. Remove right side covering.
4. Turn the rebreather (5) counterclockwise by hand or with a wrench and remove.
5. Apply a thin coat of oil to the new ventilator package.
6. Install the new rebreather manually.
   Tightening torque: 5 N·m.

P.S. For machines equipped with rebreachers, no pressurization is required.

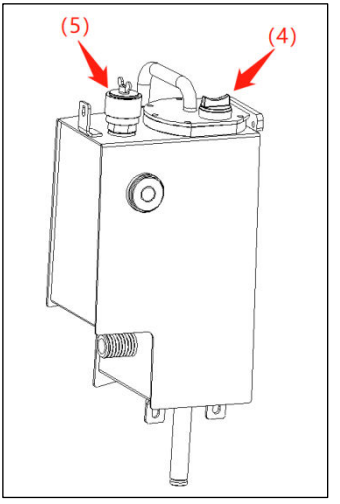

Check and adjust engine valve clearance

This operation requires experience. Please entrust your sales or service agent.

Cleaning of Engine Cooling System

Warning

- Please stop the engine and wait for the machine to cool down before maintenance. .
- The engine, exhaust pipe, radiator, and many other machine parts are really hot when the engine is just stopped. Touching such parts can cause scalding.
- The engine coolant is also under high temperature and high pressure when the engine is just stopped. Take special cautions while loosening the cap or plug. Operating the machine in such case will cause scalding and injuries by splashing high temperature coolant.
- If the maintenance requires the running of engine, assign two operators for teamwork and keep contact with each other.
- One operator must sit in the driver seat to get ready to stop the engine immediately when necessary. This operator must pay special attention not to touch any joystick or pedal, unless it's absolutely necessary.
- The other operator for the maintenance must keep the body and clothing away from motion parts of machine.
- While the engine is running, it's really dangerous standing behind the machine, as the machine probably moves suddenly. While the engine is running, never stand behind the machine.
- Do not disassemble the radiator cap or drainage plug when the coolant is hot. Stop the engine, wait for the engine and radiator to cool down, and then slowly loosen and take out the radiator cap and drainage plug.

During cleaning, if the coolant temperature is low, the thermostat will be closed and the coolant will not flow within the radiator. Before cleaning, heat up the coolant to at least 90℃.

1. Open the engine hood.

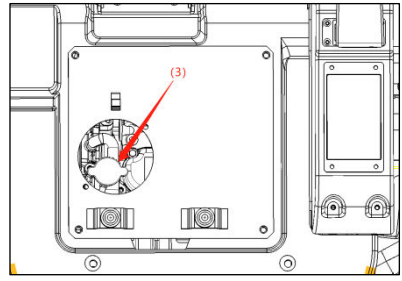

2. Slowly loosen the radiator cap (3) to relieve the internal pressure and then take out the cap.

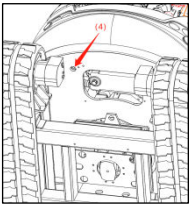

3. Place a tray beneath the water drainage plug (4) to collect the used coolant and then loosen the water drainage plug (4) to drain the coolant.
4. Tighten the water drainage plug (4).
5. Add running water through the water filler port into the radiator, till the water level reaches the top of filler port. Add the water slowly and easily to prevent the ingress of air into radiator.
6. Install the radiator cap (3).
7. Start the engine and run the engine at a speed slightly higher than the low idling speed. Heat up the water temperature to at least 90℃, open the thermostat, and then run the engine for approximately 10min.
8. Stop the engine, wait for the coolant to cool down, and then take out the drainage plug (4) to drain the water.
9. After water drainage, clean the cooling system by detergent. Use the detergent as per the attached operation instructions of the detergent.
10. Repeat steps 4~8 to clean the cooling system.
11. Tighten the water drainage plug (4).
12. Add new coolant (Mixture of antifreeze and running water) through filler port to the radiator, till the radiator is full. Add the coolant slowly and easily.
13. Install the radiator cap (3).
14. Warm up the engine. Use instruments to check the cooling system for presence of abnormality.
15. Increase the water temperature to at least 90℃. Then, open the thermostat and run the engine for approximately 10min.
16. Stop the engine, wait for the coolant to cool down, and then check the coolant level in the radiator.
17. Install the radiator cap (3).

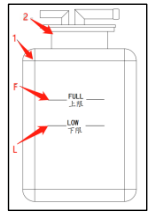

18. Clean the inside of water tank (1) and add coolant, till the water level reaches upper limit (F).
19. If the coolant is replaced, re-check the coolant level after the operations of machine.Once the machine starts operations, the coolant is distributed to the whole system so that the coolant level drops.Add the coolant to compensate the consumed coolant.

Every 1500-hour

Checking and Cleaning ofEngine Fuel Injector Nozzles

These operations require experiences. Please ask your sales or service dealer for operations.

Checking of Crankcase Ventilation Hole System

These operations require experiences. Please ask your sales or service dealer for operations.

Every 2000h

Connection of Engine Valve Seats

These operations require experiences. Please ask your sales or service dealer for operations.

Replacement of Hydraulic Oil and Cleaning of Oil Suction Filter Screen

Warning

- Please stop the engine and wait for the machine to cool down before maintenance. .
- The engine, hydraulic system and most of parts are very hot when the engine stalls. You may get scalded if you touch them.
- The hydraulic oil is also under high temperature and high pressure. Take cautions not to touch the hydraulic oil while loosening engine hood or connector. Operating the machine under such condition will cause out-spray of hot oil to result in scalding and
- Disassembling cap or filter or disconnecting pipeline before the pressure relief of hydraulic system will probably result in out-spray of hydraulic oil.
- Slowly loosen the bleeding plug to relieve the pressure of oil tank.
- While disassembling connector or plug or disconnecting hose, stand on one side, loosen slowly to gradually relieve internal pressure, and then take out.

1. Adjust the machine to the hydraulic oil level checking status.

   Refer to page 5-19"Checking of hydraulic oil tank oil level and adding of oil ".

2. Lift up the safety lock handle to the locking position.

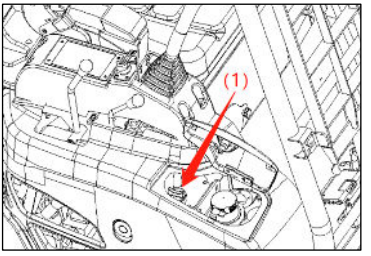

3. Open the engine hood.
4. Slowly loosen the bleeding plug(1) to relieve the internal pressure of hydraulic oil tank.

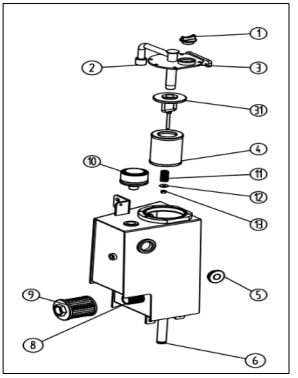

5. Loosen the hose belt and remove the hose from the flange ③.

6. Loosen the bolt and take out the flange ③.

7. Remove the return oil filter ④.

8. Place a basin under the drain plug to hold the waste oil. 9. Loosen the oil plug and drain the hydraulic oil.

10. Loosen the bolt, remove the oil filter and clean. 11. Clean the inside of the hydraulic tank.

12. Install the oil filter.

13. Install the new oil return filter on the flange ③.

14. Install the flange ③ back in place.

15. Tighten the drain plug⑥.

16. Fill hydraulic oil from the plug hole ① to the upper limit (H) of the level gauge ⑤ between the lower limit (L).

17. Pressure hydraulic oil tank. (if not equipped with a rebreather) Refer to "Pressurized Hydraulic Oil Tanks" on pages 5-20.

P.S. For machines equipped with rebreachers, no pressurization is required.

18. Tighten the plug.

19. Discharge the hydraulic oil circuit as described in the "exhaust" section below the air.

20. Adjust the machine to the hydraulic oil level check posture and wait for the oil temperature, check the oil level when it comes down.

Air Bleeding

Importance: After the replacement of hydraulic oil, bleed the air from hydraulic pipelines and hydraulic devices. Otherwise, the hydraulic devices will probably be damaged.

Cylinders

1. Start the engine and run at low idling speed for 10min.

2. Keep the engine running at low idling speed, extend and retract all cylinders for 4~5 times, but take caution not to telescope any cylinder to the end.

3. Run the engine at high speed, extend and retract all cylinders for 4~5 times, but take caution not to telescope any cylinder to the end.

4. Restore the engine to low idling speed, extend and retract all cylinders for 4~5 times, and always telescope to the end.

As necessary

Replace bucket teeth

Replace the bucket teeth when the tooth sleeves are worn. Do not wait for the bucket to be damaged before replacement.

Warning

- Before the maintenances or repairs beneath the machine, lower all movable working devices onto the ground or lowest position.
- During the repairs and replacements of bucket teeth or side teeth, to prevent the accidental movement of machine, securely fix the working device.
- During the use of hammer, the pins and the metal fragments will probably fly out. It will probably cause serious personal harms.
- While hammering hard metal parts such as tooth pins, bucket teeth, side teeth, and bearings, please wear protective articles including goggles and gloves.
- While hammering tooth pins and bucket teeth, ensure there is no person in surrounding area.
- During operations, the non-authorized personnel are prohibited to access the working zone.

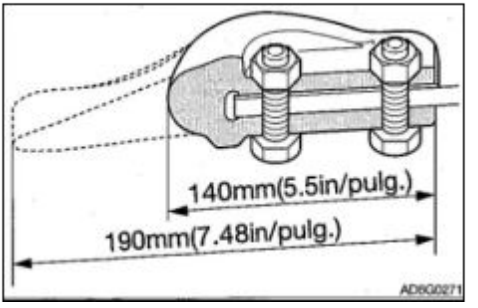

If the bucket teeth are worn to 140mm, replace.

Disassembling

1. Clean the bucket and park the machine on a level, firm, and safe ground.
2. Place level the bottom face of bucket and cushion it with cushion block to ease the disassembling of bolts (1).
3. Withdraw the starter key and check bucket for steady placement.

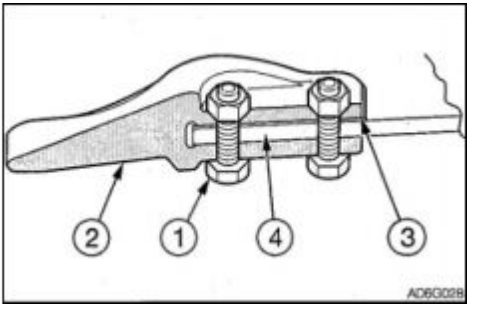

4. Disassemble the bolts (1).
5. Replace bucket teeth (2) and shims (3).

Installation

1. Clean the area for installation of bucket

tooth. If there is any soil or mud in this area, the bucket tooth and tooth sleeve probably can't be inserted completely.

2. Place the bucket tooth into the bucket.
3. If the bucket tooth is insecure, please insert a shim to reduce the gap.
4. Insert the bolt from outer side of bucket and tighten by nut.

- Tightening torque: 102 N.m.

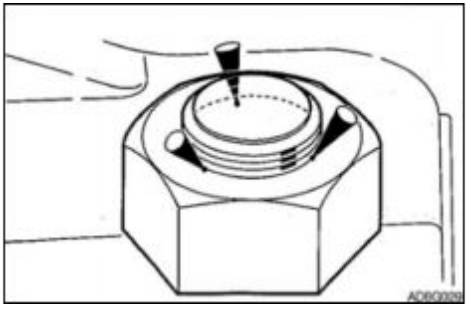

5. Rivet the bolt by a press or perform three-point welding at the threaded portion (Nut end).

Replacement of Bucket

Warning

- Before the maintenances or repairs beneath the machine, lower all working devices onto the ground or lowest position.
- If the maintenance requires the running of engine, assign two operators for teamwork and keep contact with each other.
- One operator must sit in the driver seat to get ready to stop the engine immediately when necessary. This operator must pay special attention not to touch any joystick or pedal, unless it's absolutely necessary.
- The other operator for the maintenance must keep the body and clothing away from motion parts of machine.
- During the use of hammer, the pins and the metal fragments will probably fly out. It will probably cause serious personal harms.
- While hammering hard metal parts such as tooth pins, bucket teeth, side teeth, and bearings, please wear protective articles including goggles and gloves.
- While hammering tooth pins and bucket teeth, ensure there is no person in surrounding area.
- While aligning pinholes, always check by visual observation. Do not insert your finger into pinholes, otherwise your finger will probably be lost.

Disassembling

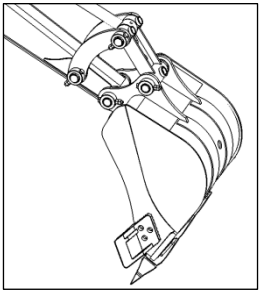

5.Remove the bucket.

1. Drop the bucket to the ground as shown in the figure above and put it firmly.

2. Put the safety lock control lever in the locked position and turn off the engine.

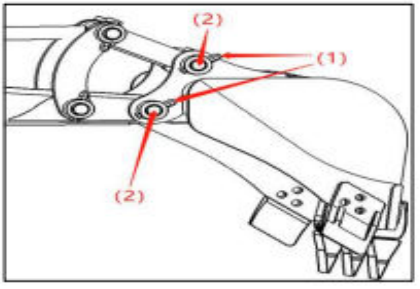

3. Remove the locking bolt (1).

4. Hammer down shaft (2) from the top.

Installation

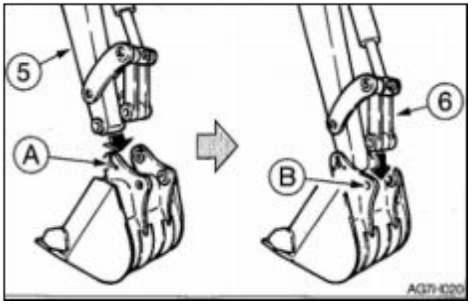

1. Align the shaft hole (A) on the bucket with the shaft hole (5) on the bucket rod and install the shaft (2).
2. Operate the cylinder, align the shaft hole (B) on the bucket with the shaft hole (6) on the connecting rod, and install the shaft (2).
3. Align the anti-rotation holes, install locking bolts (1), then install two nuts and lock tightly.

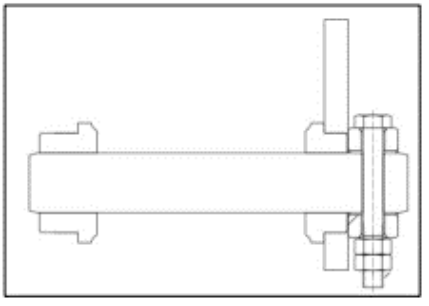

Lubrication of Joysticks and Pedals

Warning

Adjust the machine to stop status, stop the engine, and withdraw and properly preserve the starter key. Otherwise, the machine will probably move suddenly to cause serious injuries or deaths.

If the joystick or foot can not operate flexibly, please lubricate.

Control stick

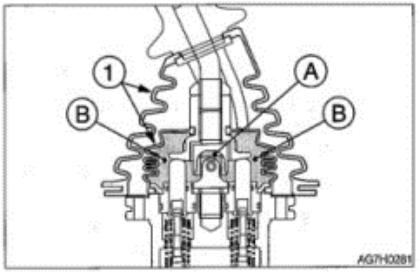

1. Remove the lower base part of the sheath (1) and turn it up.
2. Wipe off old grease.
3. Grease points (A) and (B).
4. Put the sheath (1) back in place.

Checking of Rubber Tracks

If the status of rubber tracks is as shown in the diagram below, please repair or replace. For detailed repair or replacement, please consult with your sales or service dealer.

Rubber Tracks

If any track is stretched and non-adjustable, please replace the track.

(1) Handle

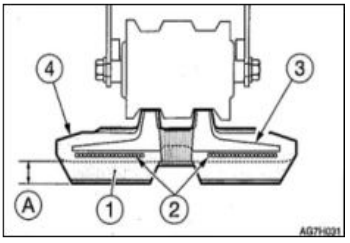

If the height (A) is ≤5mm, replace.

(2) Wire rope

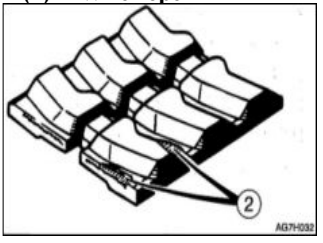

If two or more segments of the wire rope are exposed, please replace.

If more than half ofthe side face of wire rope is cut, please replace.

(3) Metal core

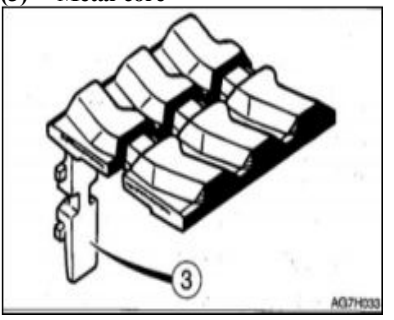

Replace even if only one metal core falls off.

(4) Rubber

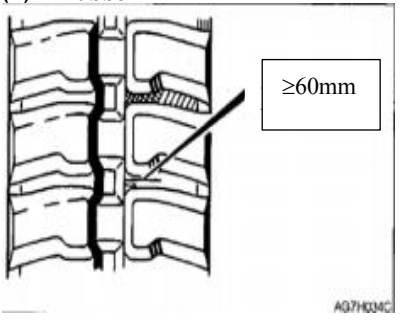

If the cracking length is ≥60mm, repair. If the wire rope is visible, repair as soon as possible, regardless of the cracking length.

Replacement of Rubber Tracks

⚠ Warning

- If it's necessary to operate beneath the lifted machine or working device, always use cushion woods, jack, or other firm and stable supports. Do not access the area beneath the machine or working device before it's firmly supported.
- If the maintenance requires the running of engine, assign two operators for teamwork and keep contact with each other.
- One operator must sit in the driver seat to get ready to stop the engine immediately when necessary. This operator must pay special attention not to touch any joystick or pedal, unless it's absolutely necessary.
- The other operator for the maintenance must keep the body and clothing away from motion parts of machine.

Disassembling

1. Completely loosen the tension of rubber tracks.

   Refer to page 5-26 "Checking and adjustment of track tension".

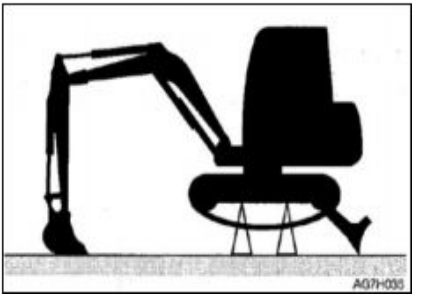

2. Lift the machine body by working device.

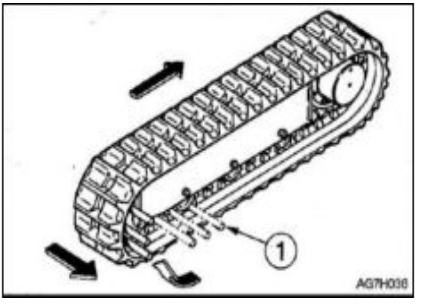

3. Place a steel tube (1) in the rubber track and rotate the sprocket slowly towards opposite direction.

4. Rotate the sprocket till the steel tube (1) closes to the tensioner and the rubber track is lifted off the tensioner and then stop the rotation of sprocket.

5. Laterally slide the rubber track to take out it from track frame. Take out the other rubber track by same procedure.

Installation

1. Lift the machine body by working device.

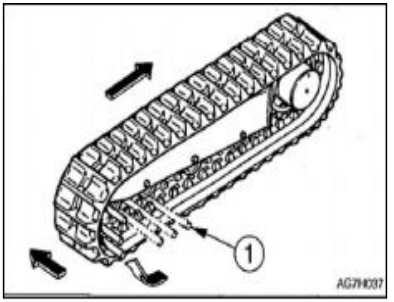

2. Place rubber track on the sprocket.

3. Place a steel tube (1) in the rubber track and rotate the sprocket slowly towards opposite direction.

4. Rotate the sprocket till the steel tube (1) closes to the tensioner and the rubber track is lifted off the tensioner and then stop the rotation of sprocket.

5. Slide inward the rubber track to install it onto the tensioner and then pull out the steel tube.

6. Check rubber track for secure installation on sprocket and tensioner.

7. Tension the rubber track to standard tension.

   Refer to the “Checking and adjustment of track tension” in page 5-26 for details.

8. Install the other rubber track by same procedure.

Maintenance during Long-Time Parking

Parking Procedure

If it's necessary to park the machine for ≥30 days, please park the machine indoors. If it's necessary to park outdoors, please park the machine on a wood-paved level ground and cover the machine by water-proof cap to keep dry.

1. Clean the machine.
2. Check for oil/water leakage and cracking and check for any loose nut or bolt.
3. Refuel and replace hydraulic oil and lubricating oil.
4. To prevent rusting and freezing, replace the engine coolant with long-life coolant (LLC).

   Refer to page 5-35 "Cleaning of radiator fins and oil cooler fins".
5. Lubricate the grease fitting by a grease gun.
6. Fully retract the bucket and bucket arm cylinders and lower the bucket and bulldozing blade onto the ground.
7. Apply anti-rusting oil to the hydraulic cylinders.
8. Disconnect the negative cable of battery and cover the battery to guard against freezing.

During Parking

⚠ Warning

- Do not operate the machine in an enclosed place with poor ventilation.
- If the natural ventilation is not possible, install ventilation fan, fan, extended exhaust pipe, or other ventilation device.

1. To prevent rusting, operate the machine once a month to circulate the oil throughout whole system.
2. Check the battery and when necessary charge the battery. Please ask your sales or service dealer for charging.

Start of Machine after Parking

Importance: If the above-mentioned "Parking procedure" is not followed during the long-time parking of machine, please consult with your sales or service dealer before restarting the machine.

1. Wipe away the lubricating oil from the piston rods of the hydraulic cylinders.
2. When necessary, add lubricating oil or grease.

Reuse of Engine

1. Fulfill the daily checking.
2. Pre-lubricate the engine before start.
   a. Crank the engine for 15s and notice to keep the fuel system closed to prevent start of engine.

b. Stop for 30s.

c. Repeat this procedure, till the engine is already cranked for 1min in total. This can enable the sufficient oil circulation throughout the lubrication system of engine.

3. Get ready the fuel system.

4. Start the engine. Idle the engine for approximately 15min and then:

- Check for normal oil pressure.
- Check for leakage of fuel, engine oil, and coolant and check indicator lamps and/or level gauge for normal functioning.

5. Avoid operating for a long time at minimum or maximum engine speed or operating the loaded residue within the first loading hour.

Troubleshooting 

Symptoms other than Malfunctions

The following symptoms are not malfunctions.

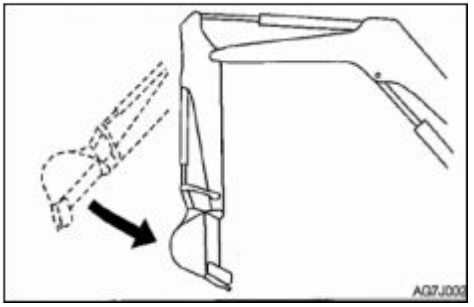

- With engine running at low speed, when the bucket arm reaches a nearly vertical position, its retraction speed will drop shortly.

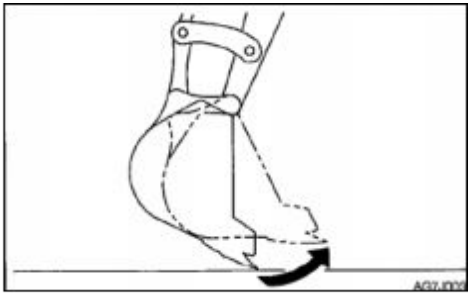

- With engine running at low speed, when the bucket teeth reach a nearly horizontal position, its movement speed will drop shortly.
- A noise of slewing motor can be heard at the start and end of slewing.
- A noise of traveling motor can be heard when the machine stops suddenly during high speed traveling.
- A noise of control valve can be heard when the working device is subject to excessive external force or moves to the end of travel.
- The operations of the machine are more labor some when an attachment heavier than the standard bucket arm or bucket is installed.

Engine Overheating

Warning

- If the steam overflows from the engine, do not open the engine hood or machine hood. The steam or hot water will probably spray out to cause scalding.
- Do not disassemble the radiator cap or drainage plug when the coolant is hot. Stop the engine, wait for the engine and radiator to cool down, and then slowly loosen the radiator cap to relieve the internal pressure.
- Please stop the engine and wait for the machine to cool down before maintenance.

The following symptoms indicate overheating.

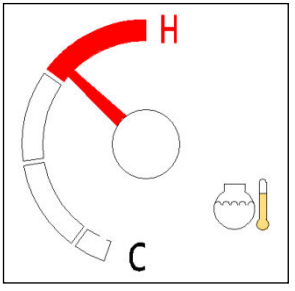

- If the water temperature meter pointer is in the white area, it indicates that the operation is in progress, water temperature is normal; If the thermometer pointer is in the red zone, it indicates that the water temperature is too high, and The
- engine water temperature alarm icon displays an audible alarm from the monitor.
- The alarm sound is heard, and the engine emergency alarm light and the coolant temperature alarm light begin to flash.
- Steam was rising from the engine room.

Remedy procedure

1. Keep the machine in a safe place.
2. Check to see if steam is coming out of the closed engine cover and cover.
3. If steam comes out, turn off the engine immediately and contact your seller or service agent for repair. If no steam comes out, run the engine at a low idle speed and let the water cool down.
4. When the thermometer pointer falls into the white area, turn off the engine.
5. When the thermometer pointer falls into the white area, turn off the engine.

Loose fan belt … Refer to page 5-22 for adjustment.

Low coolant level … Refer to page 5-16 for adding of coolant.

Water leakage … Repair.

Dirty radiator fins … Refer to page 5-35 for cleaning.

Deposits in cooling system… Refer to page 5-40 for cleaning.

If the malfunction still exists after the above-mentioned remedy procedures are taken, please contact your sales or service dealers for repairs.

No Battery Power

The following symptoms indicate no battery power.

- No rotation of starter motor or start failure of engine.
- Low volume of horn.

Remedy procedure

Start the engine by the booster battery on other machine (booster machine) and jumper cable.

⚠ Warning

- To start the engine by jumper cable, ensure to connect the cable by correct procedure. The improper use of jumper cable will result in battery explosion or unexpected machine motions.
- The booster machine and the machine with depleted battery are prohibited for mutual contact.
- The positive (+) and negative (-) clamps of the jumper cable are prohibited for mutual contact.
- During connection, firstly connect the jumper cable to positive (+) terminal. During disconnection, firstly disconnect the cable from negative (-) terminal.
- Connect the last clamp of jumper cable to a point as far as possible from the battery.
- Always wear goggles while using jumper cable to start engine.

Important: The jumper cable and clamps in use shall be suitable to the battery capacity. Do not use any damaged or corroded jumper cable or clamp. Important: Ensure the same capacity for the battery on the rescue machine and the battery on malfunctioned machine.

Important: Ensure to connect the cable clamps securely.

Connection ofJumper Cable

Importance: Place the starter keys of both rescue machine and malfunctioned machine to OFF.

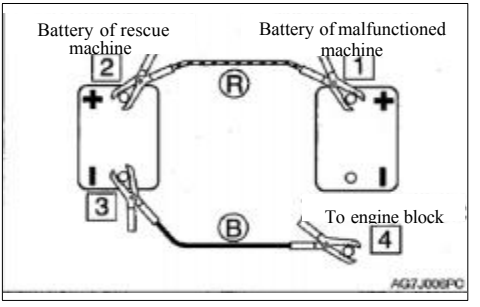

1. Connect a clamp of jumper cable (R) to the positive (+) pole of malfunctioned machine.
2. Connect the other jumper cable clamp (R) to the booster (+).
3. Connect the jumper cable clamp (B) to the charger (-).
4. Connect the other clamp of jumper cable

(B) to the engine support of the malfunctioned machine. Connect the clamp to a point as far as possible from the battery.

After Start of Engine

1. Check and ensure that the wire clamps are already connected securely to various terminals.
2. Start the engine of rescue machine and run it at high speed.
3. Start the engine of the malfunctioned machine.

Disconnection of Jumper Cable

After the successful start of the engine of malfunctioned machine, disconnect the jumper cable in reverse sequence of the connection procedure.

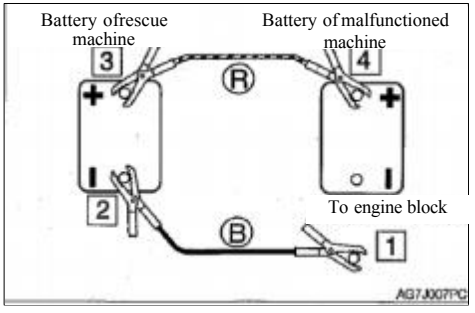

1. Disconnect the clamp of jumper cable (B) from the engine support of malfunctioned machine.
2. Disconnect the other jumper cable (B) from the charger (-).
3. Disconnect the jumper cable (R) clamp from the charger (+).
4. Disconnect the jumper cable clamp (R) from the uncharged machine (+).

Recharging

Please ask your sales or service dealer to recharge the depleted battery.

Burnout of Fuse

If a lamp fails to turn on or the electronic system fails to work, the fuse is probably burnt.

Check the fuse.

Checking and Replacement of Fuses

Warning

If a fuse is burnt again shortly after replacement, the electronic system is probably malfunctioned. The improper repair will probably cause fire danger. If the consultation is required, please contact your sales or service dealer.

1. Rotate the starter key to OFF to stop the engine.
2. Open the rear access panel.

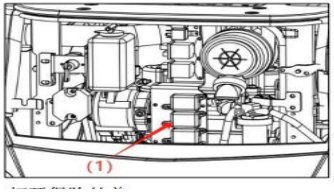

3. Open the fuse case cover (1).
4. Check fuses for burnout.
5. If a fuse is burnt, please replace with spare fuse of same specification.

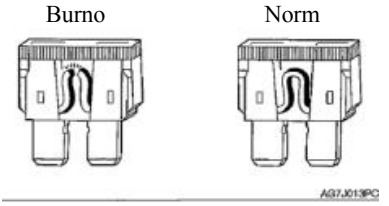

Layout and protected circuits of fuses

Specification	Protected circuit
30A	Starter switch B
10A	Power lamp
30A	Flameout power supply
10A	Horn power supply
60A	Starter B
40A	Generator B

Checking of Fuses

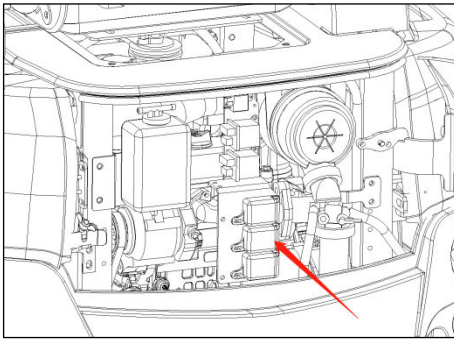

If the engine fails to start after the starter switch is rotated to ON, the filter cartridge fuse (1) is probably burnt. Open the access panel to check. If the fuse is already burnt, please contact your sales or service dealer.

Note: The fuses are large fuses used in high current applications. Like common fuses, they play the role of fuses to protect the electric parts and wiring against the damages due to high current.

Restart after Refueling

Air Bleeding from Fuel System

Importance: Do not rotate the engine by starter motor to get ready the fuel system. This will probably cause overheating of starter motor to damage coil, pinion, and/or ring gear.

Important: If the engine stops due to shortage of fuel, please add fuel, rotate the key to ON for 60s, and then rotate it to START position. Running the starter motor for a long time before the supply of sufficient fuel will cause start failure of starter.

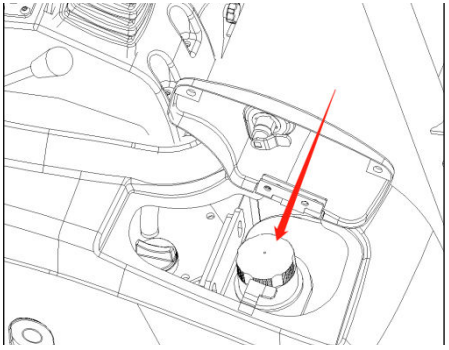

1. Add fuel.

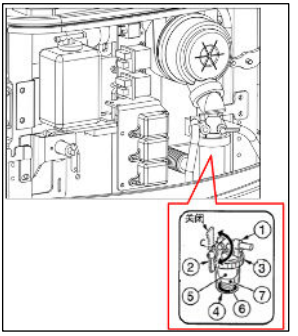

2. Open the valve (2) of fuel-water separator.

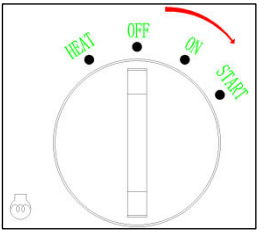

3. Rotate the starter key to ON and hold for approximately 60s. The automatic air bleeding valve bleeds the air from fuel system.

Note: The air content in the fuel system will cause start failure or other problems of engine. Ensure to bleed the air when the fuel tank is empty or the fuel system contains air.

Flashing of Warning Lamps

If a warning tone is heard or a warning lamp starts to flash during operations, park the machine in a safe place and take the following remedy measures.

Warning lamp	Lamp name	Cause and solution
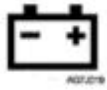	Charging warning lamp	The fan belt or charger is malfunctioned. Check the fan belt for looseness and breakage and when necessary adjust. If the lamp continues to flash after maintenance, the charger is probably malfunctioned. If the help is needed, please consult with your sales or service dealer. Refer to page 5-23 “Checking and adjustment of fan belt ”.
	Engine oil pressure indicator lamp	The engine lubrication system is internally malfunctioned. Check the engine oil level. If this lamp flashes when the oil level is normal or still flashes after adding of oil, please consult with your sales or service dealer. Refer to page 5-18 “Checking and adding of engine oil ”.
	Water temperature warning lamp	The coolant temperature is too high and the engine is overheated. Refer to page 6-3 “Engine Overheating”.
	Fuel level warning lamp	The fuel level is low. Add fuel. Refer to page 5-18 “Checking of fuel level”.

Other Symptoms

For the symptoms not listed in table below or the further existed problems after appropriate solutions, please consult with your sales or service dealer.

Symptom	Main cause	Solution
Inflexible motion of left/right joystick Inflexible motion of bulldozing blade joystick and accelerator joystick	• Shortage of grease for left/right joystick • Loose wires	• Lubricate joystick. Refer to page 5-51 • Adjust or replace (Please consult with your sales or service dealer).
Operation failure of bucket working device, slewing, or traveling	• Lifted (locked) safety lock handle • Burnout offuse • Traveling lock adjustment malfunction	• Lower down (Unlock) safety lock handle. Refer to page 2-18 • Replace fuse. Refer to page 6-6 • Adjust traveling lock (Please consult with your sales or service dealer).
Insufficient digging force	• Under-low hydraulic oil level • Low hydraulic oil temperature • Air filter blockage • Incorrect hydraulic oil type	• Add oil till the specified level is reached. Refer to page 5-19 • Warm up the machine. Refer to page 3-7 • Clean air filter. Refer to page 5-34 • Replace hydraulic oil. Refer to page 5-45
No traveling or inflexible traveling	• Blockage by stone or impurity	• Remove impurities.
Leftward/rightward steering ofmachine	• Blockage by stone or impurity	• Remove impurities.

Symptom	Main cause	Solution
	• Track tension adjustment malfunction	• Adjust tracks to specified tension. Refer to page 5-26
Impossible change of traveling speed	• Burnout offuse	• Replace fuse. Refer to page 6-6
No steering or inflexible steering	• Insufficient grease for slewing bearing	• Lubricate bearings. Refer to page 5-28
Over-high temperature of hydraulic oil	• Under-low hydraulic oil level	• Add oil till the specified level is reached. Refer to page 5-19
Running of starter motor but no start of engine	• Insufficient fuel • Air content in fuel system • Water content in fuel system	• Add fuel. Refer to page 5-18 • Bleed the air. Refer to page 6-8 • Drain water. Refer to page 5-29
Track falloff	• Loose tracks	• Increase tension. Refer to page 5-27
Occasional black smoke from engine	• Air filter blockage	• Clean air filter. Refer to page 5-34
White or blue smoke from engine	• Excessive engine oil • Low quality fuel	• Adjust till the specified level is reached. Refer to page 5-18 • Replace fuel.
Irregular noise of engine (Combustion or mechanical noise)	• Use of low quality fuel • Engine overheating • Internal damage of exhaust pipe	• Replace fuel. • Refer to page 6-3 “Engine Overheating”. • Replace exhaust pipe. For replacement, please consult with your sales or service dealer.

Lower the boom to the ground

If the bucket unit must be lowered to the ground after the engine is turned off, follow the procedure below.

Warning

- When the bucket unit is lowered, keep away from the work area. Dust from the bucket or bucket unit may hit you.

Procedure

- Turn the starter key to "ON".

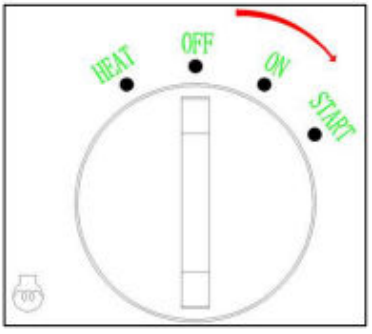

- 2. Control the working device to land through the operating handle. For details, refer to"Operating the working Device" on page 3-13.

Towing

Warning

During towing, the improper operations, the incorrect use of rope, or the improper checking will cause serious injuries or deaths.

- The breakage or disengagement of rope can cause danger. Use ropes compatible with the towing force.
- Do not use any kinked, twisted, or even damaged rope.
- Do not suddenly apply heavy load onto the rope.
- Please wear safety gloves during the handling of rope.
- Ensure that an operator is assigned each on the towing machine and the towed machine.
- Do not operate the towing operation on a slope.
- Keep all personnel away from the rope during towing.

Important: Do not tow the machine when the engine is not started or the machine is not running. Otherwise, the towed machine will probably be damaged.

Importance: Please ensure to abide by the following procedure when the machine is towed by traction hole. The negligence of any of following steps will probably damage the traction hole or other framework part.

Towing of Machine

Use the following procedure to drag a heavy object or a machine entrapped in mud.

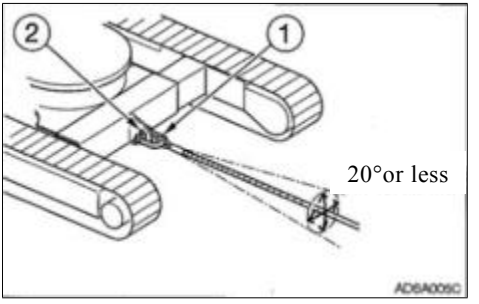

- Permissible force: 28.2KN

1. Affix the rope to the hook ring (1).
2. Hook the hook ring (1) to the traction hole (2).
3. Ensure that the rope maintains a 20°or smaller angle with the traveling frame.
4. Move the machine to tension the rope.
5. Drive the machine at 2km/h or lower speed to a position (Easy for repairs) within a short range from the site.

Damage of Cab or Shelter

Warning

Immediately replace damaged cab or shelter. Operating with damaged cab/shelter will probably cause serious personal injuries or deaths.

Do not operate the machine until the replacement is completed. Do not attempt to repair damaged cab or shelter by welding. Otherwise it will probably endanger the safety of cab/shelter.



< Applicable model RH18 Series RH20>

Part No.: 0301080105
RH18/RH20 ceiling

Parameters of complete vehicle



Applicable models: RH18

RH18	Technical parameters		Unit	
Overall weight			kg	1550
Bucket capacity			m^3	0.03
Type of working device				Backhoe
Engine	Model			Kubota D722
	Displacement		L	0.719
	Rated output power/speed		kw/r/min	10.2/2500
	Maximum torque/rotating speed		N.m/r/min	43.5
	starter		V-KW	12-1.0
	electric generator		V-W	12-168
	storage battery		V-Ah	12-65 recommended, equivalent
Speed and digging force	Maximum traveling speed (High/low)		km/h	2.1
	Slewing speed		rpm	8.5
	Maximum grade ability		KN	30°
	Bucket digging force		KN	13.5
	Bucket arm digging force		KN	10.5
	Theoretic maximum traction force		KN	10.3
Dimensions	Overall length		mm	3327
	Overall width		mm	1128
	Overall height (With roll cage)		mm	2301
	Bulldozing blade	Maximum cleaning depth	mm	197
		Maximum lifting height	mm	202
Track subassembly	Ground pressure		kPa	32.8
	Tracks	Material		rubber tracks
		Tension control type		Grease cylinder
	Type of pump			Gear pump
Fuel/oil/fluid pressure and capacity	Working pressure		MPa	20
	Flow		(L/min)	22+8.8
	Hydraulic oil tank capacity		(L)	15.3
	Maximum engine oil capacity (Effective)		(L)	3.2
	Fuel tank capacity		(L)	18

All ratings of the machine are obtained when the machine is operating on a solid horizontal support surface. If the working environment conditions of the machine differ from the above-mentioned reference conditions (Such as the operations on uneven ground and slope), the operator shall take these conditions into consideration.

Applicable models: RH18

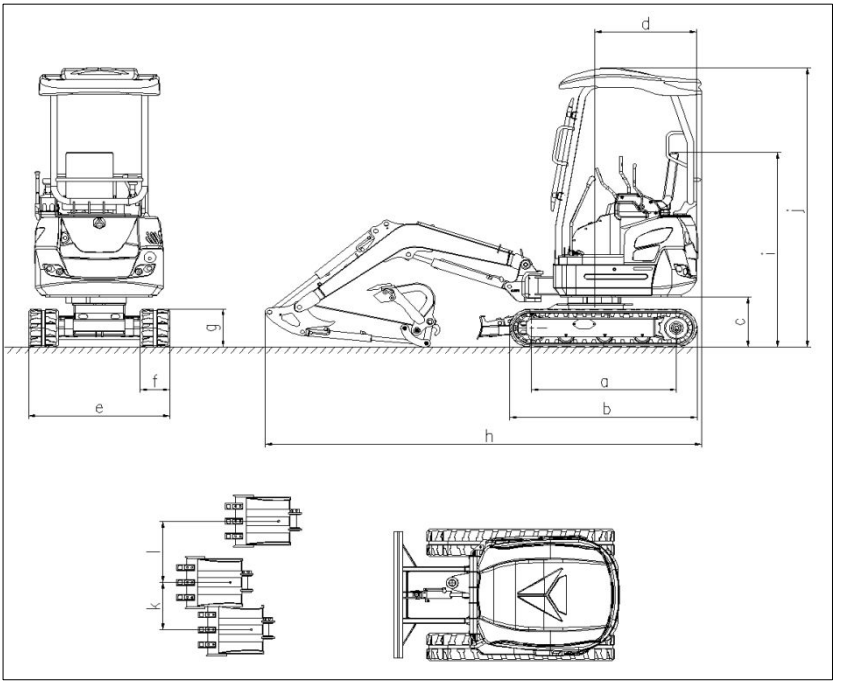

	Overall dimensions	Unit: mm
a	Wheel track	1130
b	Overall length of crawler	1447
c	Ground clearance of platform	406
d	Tail slewing radius of platform	724
e	Chassis width	1128
f	Track width	230
g	Track height	320
h	Transport length	3327
i	Ground clearance of seat	1600
j	Overall height	2301
k	Boom slewing - Left	390
l	Boom slewing – Right	510

Applicable models: RH18
Lifting power(KG)

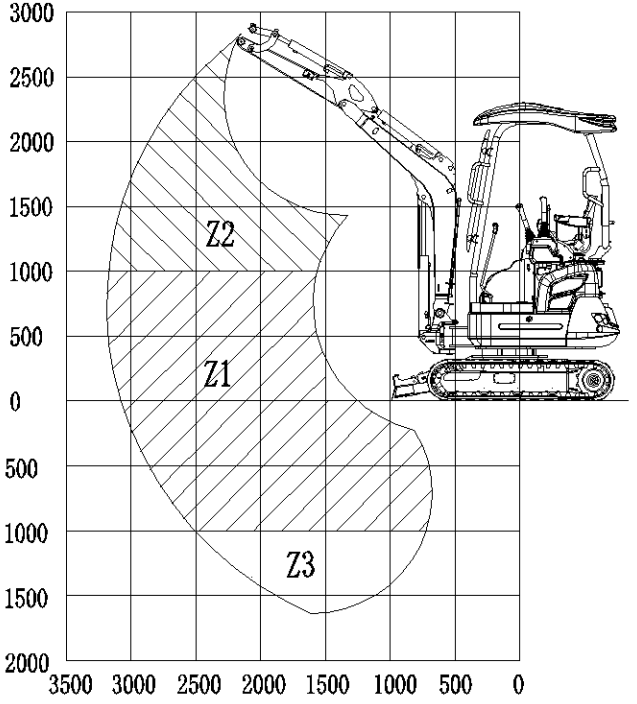

LD		1.5m	2m	2.5m	3m	MAX
	Z2	624	421	274		
	Z1	696	460	381	350	
	Z3	545	460	381		

Optional Products



General Safety Measures

Safety Measures

Warning

Please take the following safety measures while disassembling or installing attachments or optional products.

- Please consult with Kenstone Heavy Machinery before installing optional products.
- Do not use any attachment not approved by Kenstone Heavy Machinery. Otherwise it will probably cause safety issues or cause adverse influence on operations or life of machine.
- Kenstone Heavy Machinery will not be liable for any injury, accident, or product damage arising from the use of non-approved attachments.
- Select a stable and level working zone. Ensure to park the machine in a well-ventilated place.
- Remove obstacles and dangerous objects and immediately clear any splashed fuel.
- During lifting, ensure to assign one person as signaler.

For detailed procedure and measures, please follow the instructions of the signaler.

- If it's necessary to place temporarily heavy weights or accessories onto the ground during disassembling or installation, please ensure to place them in a steady place.
- During lifting, keep all personnel away from working zone. There is probably a danger of object falling or contact with personnel in the working zone.
- Use a crane to move heavy weights (≥25kg).
- Ensure to properly support the heavy weights before movement. While lifting a load by a crane, notice the gravity center of the load and keep balance the machine.
- Do not operate the machine when a load is lifted by a crane.
- Follow the correct procedures to install boom and bucket arm, otherwise it will probably result in serious injuries. If the help is needed, please consult with your sales or service dealer.

Precautions for Installation of Working Device

Ensure to fulfill commissioning after the replacement with optional product or other special attachment. Check the hydraulic oil level and if necessary add oil. For detailed

installation/disassembling procedures of attachments, please consult with your sales or service dealer.

Precautions for Operations of Attachment

⚠ Warning

The extended attachment will deteriorate the machine stability. While the machine is traveling orslewing on a steep slope, the imbalance will probably result in rollover. Do not take the following operations, otherwise it will be extremely dangerous.

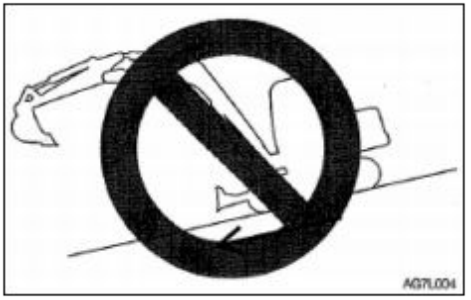

Driving down a steep slope with attachment lifted

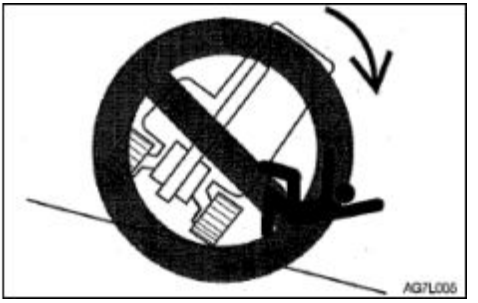

Driving laterally on a steep slope

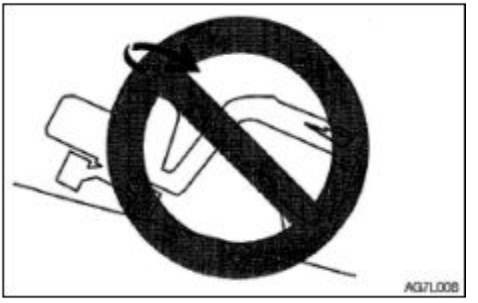

Slewing on a steep slope

If a heavy attachment is installed, while stopping the machine, the impulsion force of the machine will be larger than usual value before the complete stop. Please carefully take the distance into consideration to prevent impact against surrounding objects. Keep a safe distance from surrounding obstacles.

If a heavy attachment is installed, the gravity lowering (Slow lowering of attachment under the action of dead weight when the

attachment is stopped in the air) will speed up.

The machine is more vulnerable to rollover in lateral direction than longitudinal direction.

(1) Do not slew laterally when the bucket working device is heavily loaded. Especially, do not slow laterally on a slope.

(2) For a machine with installed breaking hammer or grinder, the attachment is heavier than the installed standard bucket. Do not operate this machine laterally, especially during the downslope digging.

The working range will enlarge when an extended bucket arm is installed. Please carefully take the distance into consideration to prevent impact against surrounding objects of machine and keep a safe spacing from surrounding obstacles.

Precautions for Operations of Attachment

⚠ Warning

- Please consult with Kenstone Heavy Machinery before installing optional products.
- Do not use any attachment not approved by Kenstone Heavy Machinery. Otherwise it will probably cause safety issues or cause adverse influence on operations or life of machine.
- Kenstone Heavy Machinery will not be liable for any injury, accident, or product damage arising from the use of non-approved attachments.

Hydraulic Breaking Hammer

For the operations of breaking hammer, please refer to the separately provided manual of hydraulic breaking hammer.

⚠ Warning

The machine is always operated with a track width extended to 1128 mm to maximize the stability of the machine. If the machine is operated with a narrower track width, the machine may tip over due to its poor stability.

Important: While installing an attachment, ensure that it's suitable for the machine model in use.

If the recommendations are required for the choice of attachment, please contact your sales or service dealer.

Precautions for Operations

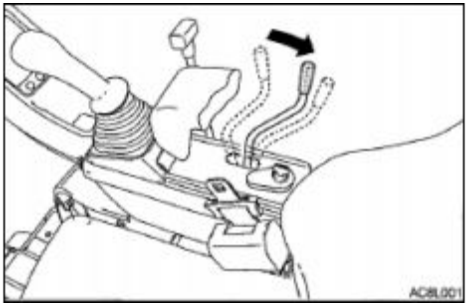

(1) Start the engine and run at 75% of maximum speed.

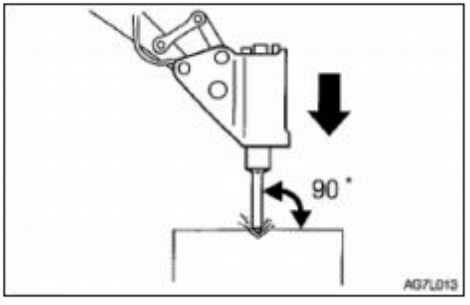

(2) Perform the crushing operation by placing the hammer head perpendicular to the working face.

(3) During the crushing operations, appropriately aim the hammer head at the object to be crushed and avoid the air impact.

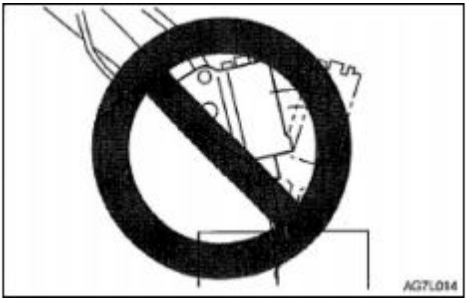

(4) Do not pry by hammer head or pry during breaking.

(5) Do not move the hammer head during crushing.

(6) Do not impact one same surface continuously for >30s.

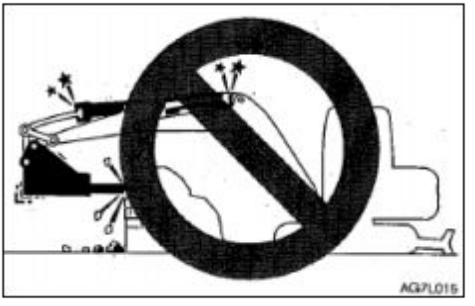

(7) Do not crush when the cylinder is fully extended or retracted (at travel end). Reserve at least 50mm travel.

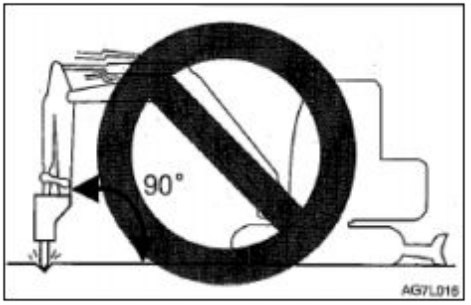

(8) Do not crush when the bucket arm is perpendicular to the ground.

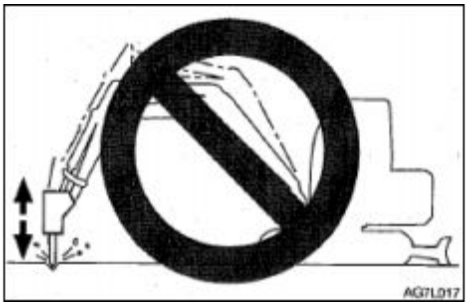

(9) Do not crush any object to be impacted by the gravity drop of breaking hammer.

(10) Do not use the breaking hammer to move any object or rock to be crushed.

(11) Slew the machine occasionally to cool down the engine.

(12) In event of abnormal vibration of hydraulic pipes, the nitrogen in the accumulator is probably leaking. Please check as soon as possible.

Periodical Replacement of Hydraulic Oil

- With installed hydraulic breaking hammer, the hydraulic oil deteriorates faster than the normal operations. Ensure to replace the hydraulic oil and oil return filter element.
- The failure to replace timely will result in damage of machine and breaking hammer hydraulic system. To prolong the life of hydraulic system, ensure to replace the hydraulic oil and oil return filter element after the hours listed in table below.
- During the replacement of hydraulic oil, clean the oil suction filter screen.

Replacement period (Hour)

Item	Hydraulic oil	Filter element
1st time	—	25
2nd time	—	100
Periodic	1200(600)	200

By taking the breaking hammer operating ratio of 100% for instance.

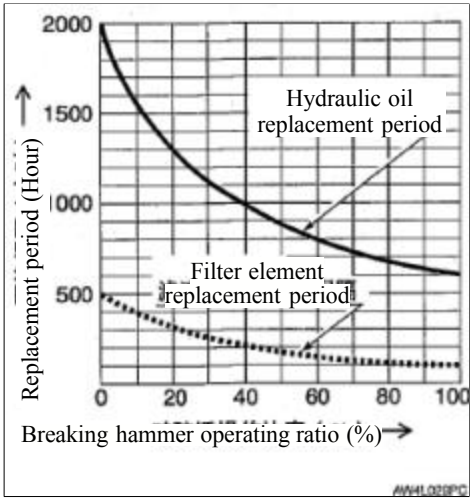

( ): For the use ofcommon anti-wear hydraulic oil.

Traveling Alarm

Warning

If a fuse is burnt again shortly after replacement, the electronic system is probably malfunctioned. The improper repair will probably cause fire danger. If the consultation is required, please contact your sales or service dealer.

1. Rotate the starter key to OFF to stop the engine.
2. Open the access panel.

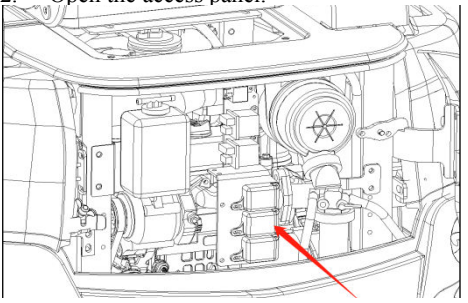

3. Open the fuse case cover
4. Checking of Fuses

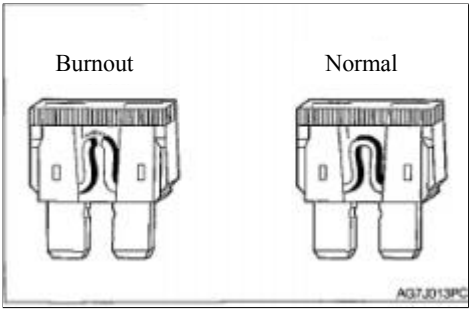

5. If a fuse is burnt, please replace with spare fuse of same specification.

Layout and protected circuits of fuses

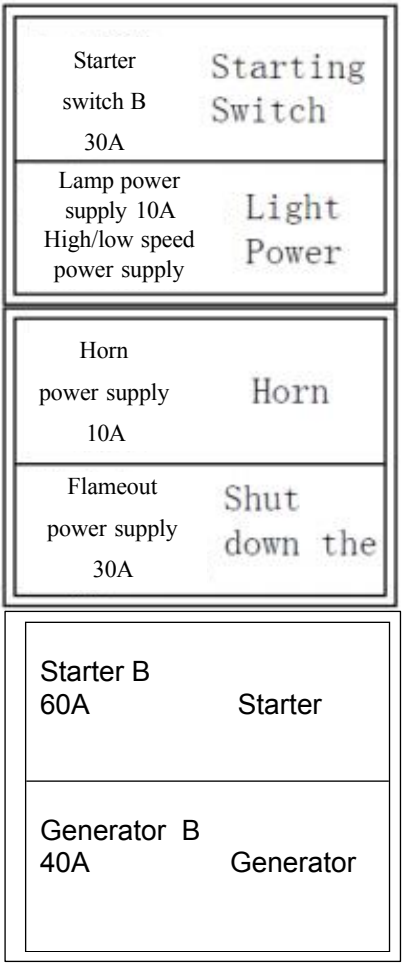

Option quality

Optional	weight (kg)
Fork	34.52
Rake (Type 500)	21.2
Rake (Type 800)	38.4
Rake (Type 1500)	84.5
Mechanical quick change	13..8
Flat hopper (Type 800)	40.8
Flat hopper (Type 1000)	49.2
Screen bucket (Type 600)	26.2
Screen bucket (Type 1000)	38.9
Grab	55.1
Tilting bucket (Type 800)	53
Tilting bucket (Type 1000)	59

*: Option quality is added to the quality of the standard machine.

*: This table only contains options with a mass of 10kg or heavier.

Operation Manual

RH18 Mini Excavator

Publication editors:
Zang Jipeng and Liu RongBin
May, 2024

The information contained in this operation manual is subject to changes without further notice.

1st Edition in May, 2024

Shandong Kenstone Heavy Machinery Co., Ltd.
Address: Dingyuanzhai Industrial Park, Guanxian County, Shandong, China
Service hotline: 0635-566 3333