AQUASNAP®
30RB060-390
Air-Cooled Liquid Chillers

Controls, Start-Up, Operation, Service and Troubleshooting

CONTENTS

Page

SAFETY CONSIDERATIONS 2
GENERAL 2-5
Conventions Used in This Manual 3
Basic Control Usage 3
- SCROLLING MARQUEE DISPLAY
- ACCESSORY NAVIGATOR™ DISPLAY MODULE

CONTROLS 5-43
General 5
Main Base Board (MBB) 5
Scroll Protection Module (SPM) 7
Electronic Expansion Valve (EXV) Board 8
Fan Boards 9
Reverse Rotation Board 14
- DIAL SETTINGS
- PHASE REVERSAL PROTECTION
- PHASE LOSS AND UNDER-VOLTAGE PROTECTION

Enable-Off-Remote Contact Switch 14
Emergency On/Off Switch 14
Energy Management Module (EMM) 14
Energy Management Module Heat Reclaim (EMM HR) 15
Local Equipment Network 16
Board Addresses 16
Control Module Communication 16
- RED LED
- GREEN LED
- YELLOW LED

Carrier Comfort Network® (CCN) Interface 16
Configuration Options 17
- MINIMUM LOAD CONTROL
- RAMP LOADING
- MINUTES OFF TIME

Dual Chiller Control 17
Capacity Control 20
- BRINE CHILLER OPERATION
- CAPACITY CONTROL OVERRIDES

Head Pressure Control 24
- LOW AMBIENT TEMPERATURE HEAD PRESSURE CONTROL OPTION
- LOW AMBIENT TEMPERATURE HEAD PRESSURE CONTROL OPERATING INSTRUCTIONS

Cooler Pump Control 31
Machine Control Methods 32
- SWITCH CONTROL
- TIME SCHEDULE
- CCN CONTROL
- UNIT RUN STATUS

Cooling Set Point Selection 33
- SET POINT 1
- SET POINT 2
- 4 TO 20 mA INPUT
- DUAL SWITCH
- SET POINT OCCUPANCY

Temperature Reset 33
Demand Limit 41
- 2-STEP SWITCH CONTROLLED
- EXTERNALLY POWERED (4 to 20 mA Controlled)
- CCN LOADSHED CONTROLLED

Remote Alarm and Alert Relays 41
PRE-START-UP 43,44
System Check 43
START-UP 44,45
Actual Start-Up 44
Operating Limitations 44
- TEMPERATURES
- VOLTAGE
- MINIMUM FLUID LOOP VOLUME
- FLOW RATE REQUIREMENTS

OPERATION 45-49
Sequence of Operation 45
Dual Chiller Sequence of Operation 45
Operating Modes 46
Optional Heat Reclaim Module 49
SERVICE 49-57
Electronic Expansion Valve (EXV) 49
- EXV TROUBLESHOOTING PROCEDURE

Cooler 51
- FREEZE PROTECTION
- LOW FLUID TEMPERATURE
- LOSS OF FLUID FLOW PROTECTION
- TUBE PLUGGING
- RETUBING
- TIGHTENING COOLER HEAD BOLTS
- CHILLED WATER FLOW SWITCH

RTPF Condenser Coil Maintenance and Cleaning Recommendations 53
- REMOVE SURFACE LOADED FIBERS
- PERIODIC CLEAN WATER RINSE
- ROUTINE CLEANING OF COIL SURFACES

MCHX Condenser Coil Maintenance and Cleaning Recommendations 55
Condenser Fans 55
Refrigerant Circuit 56
- LEAK TESTING
- REFRIGERANT CHARGE

Safety Devices 56
- COMPRESSOR PROTECTION
- CRANKCASE HEATERS

Relief Devices 56
- HIGH-SIDE PROTECTION
- LOW-SIDE PROTECTION

Compressors 56
- COMPRESSOR REPLACEMENT
- OIL CHARGE
- SYSTEM BURNOUT CLEANUP PROCEDURE

MAINTENANCE 57
Recommended Maintenance Schedule 57
TROUBLESHOOTING 57-81
Alarms and Alerts 57

Manufacturer reserves the right to discontinue, or change at any time, specifications or designs without notice and without incurring obligations.

Catalog No. 04-53300068-01 Printed in U.S.A. Form 30RB-4T Pg 1 2-11 Replaces: 30RB-3T

CONTENTS (cont)

Page

- DIAGNOSTIC ALARM CODES AND POSSIBLE CAUSES

Sensors 71
Thermistors 71
- COOLER LEAVING FLUID SENSOR
- COOLER ENTERING FLUID SENSOR
- DUAL CHILLER LWT
- COMPRESSOR RETURN GAS TEMPERATURE
- OUTDOOR AIR TEMPERATURE
- REMOTE SPACE TEMPERATURE

Service Test 74
APPENDIX A — LOCAL DISPLAY TABLES 82-93
APPENDIX B — CCN TABLES 94-107
APPENDIX C — CCN ALARM DESCRIPTION . . 108-111
APPENDIX D — R-410A PRESSURE VS. TEMPERATURE CHART 112
APPENDIX E — MAINTENANCE SUMMARY AND LOG SHEETS 113-116
APPENDIX F — OPTIONAL BACNET COMMUNICATONS WIRING 117-127
INDEX 128,129
START-UP CHECKLIST FOR 30RB LIQUID CHILLER . . . . . CL-1 to CL-9

SAFETY CONSIDERATIONS

Installing, starting up, and servicing this equipment can be hazardous due to system pressures, electrical components, and equipment location (roof, elevated structures, etc.). Only trained, qualified installers and service mechanics should install, start up, and service this equipment. When working on this equipment, observe precautions in the literature, and on tags, stickers, and labels attached to the equipment, and any other safety precautions that apply. Follow all safety codes. Wear safety glasses and work gloves. Use care in handling, rigging, and setting this equipment, and in handling all electrical components..

⚠ WARNING

Electrical shock can cause personal injury and death. Shut off all power to this equipment during installation. There may be more than one disconnect switch. Tag all disconnect locations to alert others not to restore power until work is completed.

⚠ WARNING

DO NOT VENT refrigerant relief valves within a building. Outlet from relief valves must be vented outdoors in accordance with the latest edition of ANSI/ASHRAE (American National Standards Institute/American Society of Heating, Refrigeration and Air Conditioning Engineers) 15 (Safety Code for Mechanical Refrigeration). The accumulation of refrigerant in an enclosed space can displace oxygen and cause asphyxiation. Provide adequate ventilation in enclosed or low overhead areas. Inhalation of high concentrations of vapor is harmful and may cause heart irregularities, unconsciousness or death. Misuse can be fatal. Vapor is heavier than air and reduces the amount of oxygen available for breathing. Product causes eye and skin irritation. Decomposition products are hazardous.

⚠ WARNING

DO NOT attempt to unbraze factory joints when servicing this equipment. Compressor oil is flammable and there is no way to detect how much oil may be in any of the refrigerant lines. Cut lines with a tubing cutter as required when performing service. Use a pan to catch any oil that may come out of the lines and as a gage for how much oil to add to system. DO NOT re-use compressor oil.

⚠ CAUTION

This unit uses a microprocessor-based electronic control system. Do not use jumpers or other tools to short out components, or to bypass or otherwise depart from recommended procedures. Any short-to-ground of the control board or accompanying wiring may destroy the electronic modules or electrical components.

⚠ CAUTION

To prevent potential damage to heat exchanger, always run fluid through heat exchanger when adding or removing refrigerant charge. Use appropriate brine solutions in cooler fluid loop to prevent the freezing of brazed plate heat exchanger, optional hydronic section and/or interconnecting piping when the equipment is exposed to temperatures below 32 F (0° C). Proof of flow switch and strainer are factory installed on all models. Do NOT remove power from this chiller during winter shutdown periods without taking precaution to remove all water from heat exchanger and optional hydronic system. Failure to properly protect the system from freezing may constitute abuse and may void warranty.

⚠ CAUTION

Compressors and optional hydronic system pumps require specific rotation. Test condenser fan(s) first to ensure proper phasing. Swap any two incoming power leads to correct condenser fan rotation before starting any other motors. Operating the unit without testing the condenser fan(s) for proper phasing could result in equipment damage.

⚠ CAUTION

Refrigerant charge must be removed slowly to prevent loss of compressor oil that could result in compressor failure.

⚠ CAUTION

Puron® refrigerant (R-410A) systems operate at higher pressures than standard R-22 systems. Do not use R-22 service equipment or components on Puron refrigerant equipment. If service equipment is not rated for Puron refrigerant, equipment damage or personal injury may result.

GENERAL

This publication contains Controls, Operation, Start-Up, Service and Troubleshooting information for the 30RB060-390 air-cooled liquid chillers with electronic controls. The 30RB

chillers are equipped with *Comfort*Link™ controls and electronic expansion valves.

NOTE: Unit sizes 315-390 are modular units that are shipped in separate sections as modules A or B as noted in position 8 of the unit model number. Installation directions specific to these units are noted in these instructions. For modules 315A, 315B, 330A, 330B, 345A, 345B, and 360B, follow all general instructions as noted for unit sizes 30RB160,170. For modules, 360A, 390A, and 390B follow instructions for 30RB190. See Table 1 for a listing of unit sizes and modular combinations.

NOTE: The nameplate for modular units contains only the first two digits in the model number. For example, 315A and 315B nameplates read 31A and 31B.

Table 1 — Modular Unit Combinations

UNIT SIZE	MODULE A	MODULE B
30RBA315	30RBA160	30RBA160
30RBA330	30RBA170	30RBA160
30RBA345	30RBA170	30RBA170
30RBA360	30RBA190	30RBA170
30RBA390	30RBA190	30RBA190

NOTE: An "A" in the model number indicates the design series.

Conventions Used in This Manual — The following conventions for discussing configuration points for the local display (scrolling marquee or Navigator™ accessory) will be used in this manual.

Point names will be written with the mode name first, then any sub-modes, then the point name, each separated by an arrow symbol (→). Names will also be shown in bold and italics. As an example, the Lead/Lag Circuit Select Point, which is located in the Configuration mode, Option sub-mode, would be written as ***Configuration →OPTN→LLCS***.

This path name will show the user how to navigate through the local display to reach the desired configuration. The user would scroll through the modes and sub-modes using the ▲ and ▼ keys. The arrow symbol in the path name represents pressing ENTER to move into the next level of the menu structure.

When a value is included as part of the path name, it will be shown at the end of the path name after an equals sign. If the value represents a configuration setting, an explanation will be shown in parenthesis after the value. As an example, ***Configuration→OPTN→LLCS* = 1** (Circuit A leads).

Pressing the ESCAPE and ENTER keys simultaneously will scroll an expanded text description of the point name or value across the display. The expanded description is shown in the local display tables but will not be shown with the path names in text.

The CCN (Carrier Comfort Network®) point names are also referenced in the local display tables for users configuring the unit with CCN software instead of the local display. The CCN tables are located in Appendix B of the manual.

Basic Control Usage

SCROLLING MARQUEE DISPLAY — The scrolling marquee display is the standard interface display to the *Comfort*Link Control System for 30RB units. The display has up and down arrow keys, an ENTER key, and an ESCAPE key. These keys are used to navigate through the different levels of the display structure. Press the ESCAPE key until the highest operating level is displayed to move through the top 11 mode levels indicated by LEDs (light-emitting diodes) on the left side of the display. See Fig. 1.

Once within a mode or sub-mode, pressing the ENTER and ESCAPE keys simultaneously will put the scrolling marquee display into expanded text mode where the full meaning of all sub-modes, items and their values can be displayed for the current selection. Press the ENTER and ESCAPE keys to return the scrolling marquee display to its default menu of rotating display items (those items in ***Run Status→VIEW***). In addition, the password will be disabled, requiring that it be entered again before changes can be made to password protected items. Press the ESCAPE key to exit out of the expanded text mode.

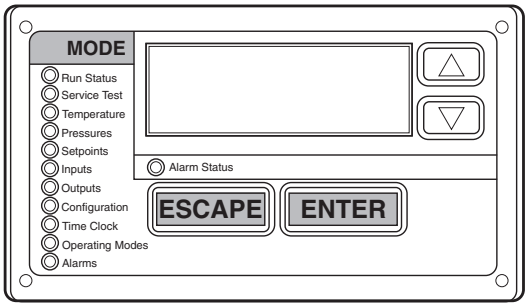

Fig. 1 — Scrolling Marquee Display

NOTE: When the Language Selection (***Configuration→ DISP→LANG***), variable is changed, all appropriate display expansions will immediately change to the new language. No power-off or control reset is required when reconfiguring languages.

When a specific item is located, the item name alternates with the value. Press the ENTER key at a changeable item and the value will be displayed. Press ENTER again and the value will begin to flash indicating that the value can be changed. Use the up and down arrow keys to change the value, and confirm the value by pressing the ENTER key.

Changing item values or testing outputs is accomplished in the same manner. Locate and display the desired item. Press ENTER so that the item value flashes. Use the arrow keys to change the value or state and press the ENTER key to accept it. Press the ESCAPE key to return to the next higher level of structure. Repeat the process as required for other items.

Items in the Configuration and Service Test modes are password protected. The words 'PASS' and 'WORD' will alternate on the display when required. The default password is 0111. Press ENTER and the 1111 password will be displayed. Press ENTER again and the first digit will begin to flash. Use the arrow keys to change the number and press ENTER to accept the digit. Continue with the remaining digits of the password. The password can only be changed through CCN operator interface software such as ComfortWORKS®, ComfortVIEW™ and Service Tool.

See Table 2 and Appendix A for further details.

ACCESSORY NAVIGATOR™ DISPLAY MODULE — The Navigator module provides a mobile user interface to the *Comfort*Link™ control system, which is only available as a field-installed accessory. The display has up and down arrow keys, an ENTER key, and an ESCAPE key. These keys are used to navigate through the different levels of the display structure. Press the ESCAPE key until 'Select a Menu Item'

is displayed to move through the top 11 mode levels indicated by LEDs on the left side of the display. See Fig. 2.

Once within a Mode or sub-mode, a ">" indicates the currently selected item on the display screen. Pressing the ENTER and ESCAPE keys simultaneously will put the Navigator module into expanded text mode where the full meaning of all sub-modes, items and their values can be displayed. Pressing the ENTER and ESCAPE keys when the display says 'Select Menu Item' (Mode LED level) will return the Navigator module to its default menu of rotating display items (those items in ***Run Status→VIEW***). In addition, the password will be disabled, requiring that it be entered again before changes can be made to password protected items. Press the ESCAPE key to exit out of the expanded text mode.

NOTE: When the Language Selection (***Configuration→DISP→LANG***), variable is changed, all appropriate display expansions will immediately change to the new language. No power-off or control reset is required when reconfiguring languages.

When a specific item is located, the item name appears on the left of the display, the value will appear near the middle of the display and the units (if any) will appear on the far right of the display. Press the ENTER key at a changeable item and the value will begin to flash. Use the up and down arrow keys to change the value, and confirm the value by pressing the ENTER key.

Changing item values or testing outputs is accomplished in the same manner. Locate and display the desired item. Press ENTER so that the item value flashes. Use the arrow keys to change the value or state and press the ENTER key to accept it. Press the ESCAPE key to return to the next higher level of structure. Repeat the process as required for other items.

Items in the Configuration and Service Test modes are password protected. The words **Enter Password** will be displayed when required, with 1111 also being displayed. The default password is 0111. Use the arrow keys to change the number and press ENTER to enter the digit. Continue with the remaining digits of the password. The password can only be changed through CCN operator interface software such as ComfortWORKS, ComfortVIEW and Service Tool.

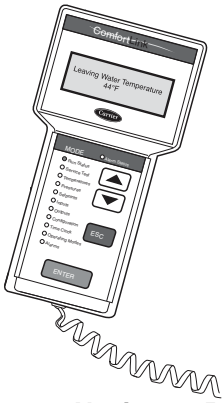

Fig. 2 — Accessory Navigator Display Module

Adjusting the Contrast — The contrast of the display can be adjusted to suit ambient conditions. To adjust the contrast of the Navigator module, press the ESCAPE key until the display reads, "Select a menu item." Using the arrow keys move to the Configuration mode. Press ENTER to obtain access to this mode. The display will read:

> TEST OFF
METR OFF
LANG ENGLISH

Pressing ENTER will cause the "OFF" to flash. Use the up or down arrow to change "OFF" to "ON". Pressing ENTER will illuminate all LEDs and display all pixels in the view screen. Pressing ENTER and ESCAPE simultaneously allows the user to adjust the display contrast. Use the up or down arrows to adjust the contrast. The screen's contrast will change with the adjustment. Press ENTER to accept the change. The Navigator module will keep this setting as long as it is plugged in to the LEN (local equipment network) bus.

Adjusting the Backlight Brightness — The backlight of the display can be adjusted to suit ambient conditions. The factory default is set to the highest level. To adjust the backlight of the Navigator module, press the ESCAPE key until the display reads, "Select a menu item." Using the arrow keys move to the Configuration mode. Press ENTER to obtain access to this mode. The display will read:

> TEST OFF
METR OFF
LANG ENGLISH

Pressing ENTER will cause the "OFF" to flash. Use the up or down arrow keys to change "OFF" to "ON". Pressing ENTER will illuminate all LEDs and display all pixels in the view screen. Pressing the up and down arrow keys simultaneously allows the user to adjust the display brightness. Use the up or down arrow keys to adjust screen brightness. Press ENTER to accept the change. The Navigator module will keep this setting as long as it is plugged in to the LEN bus.

Table 2 — *Comfort*Link™ Display Menu Structure

MODE										
RUN STATUS	**SERVICE TEST**	**TEMPERATURE**	**PRESSURE**	**SET POINTS**	**INPUTS**	**OUTPUTS**	**CONFIGURATION**	**TIME CLOCK**	**OPERATING MODES**	**ALARMS**
Auto Display (VIEW)	Manual Test Mode (TEST)	Unit Temperatures (UNIT)	Circuit A Pressures (PRC.A)	Cooling Setpoints (COOL)	General Inputs (GEN.I)	Circuit A Outputs (CIR.A)	Display Configuration (DISP)	Time of Day (TIME)	Operating Control Type (SLCT)	Reset Current Alarms (R.ALM)
Remote User Interface (R.CCN)	Quick Test Mode (QUIC)	Circuit A Temperatures (CIR.A)	Circuit B Pressures (PRC.B)	Heating Setpoints (HEAT)		Circuit B Outputs (CIR.B)	Unit Configuration (UNIT)	Day, Date (DATE)	Operating Modes (MODE)	Current Alarms (ALRM)
Machine Starts/ Hours (RUN)		Circuit B Temperatures (CIR.B)	Circuit C Pressures (PRC.C)	Misc. Setpoints (MISC)		Circuit C Outputs (CIR.C)	Service Configurations (SERV)	Schedule 1 (SCH1)		Alarm History (H.ALM)
Compressor Run Hours (HOUR)		Circuit C Temperatures (CIR.C)				General Outputs (GEN.O)	Options Configuration (OPTN)	Schedule 2 (SCH2)		
Compressor Starts (STRT)							Reset, Demand Limit, Master/Slave (RSET)	Holidays (HOLI)		
Fan Run Hours (FAN)								Service Maintenance Configuration (MCFG)		
Compressor Disable (CP.UN)										
Predictive Maintenance (MAIN)										
Software Versions (VERS)										

CONTROLS

General — The 30RB air-cooled liquid chillers contain the *Comfort*Link™ electronic control system that controls and monitors all operations of the chiller. The control system is composed of several components as listed in the following sections. All machines have at the very least a main base board (MBB), scrolling marquee display, electric expansion valve board (EXV), fan board, one scroll protection module (SPM) per compressor, Emergency On/Off switch, an Enable-Off- Remote Contact switch and a reverse rotation board.

Main Base Board (MBB) — The MBB is the heart of the *Comfort*Link control system, which contains the major portion of operating software and controls the operation of the machine. See Fig. 3. The MBB continuously monitors input/output channel information received from its inputs and from all other modules. The MBB receives inputs from status and feedback switches, pressure transducers and thermistors. The MBB also controls several outputs. Some inputs and outputs to control the machine are located on other boards, but are transmitted to or from the MBB via the internal communications bus. Information is transmitted between modules via a 3-wire communication bus or LEN (Local Equipment Network). The CCN (Carrier Comfort Network) bus is also supported. Connections to both LEN and CCN buses are made at TB3. For a complete description of main base board inputs and outputs and their channel identifications, see Table 3.

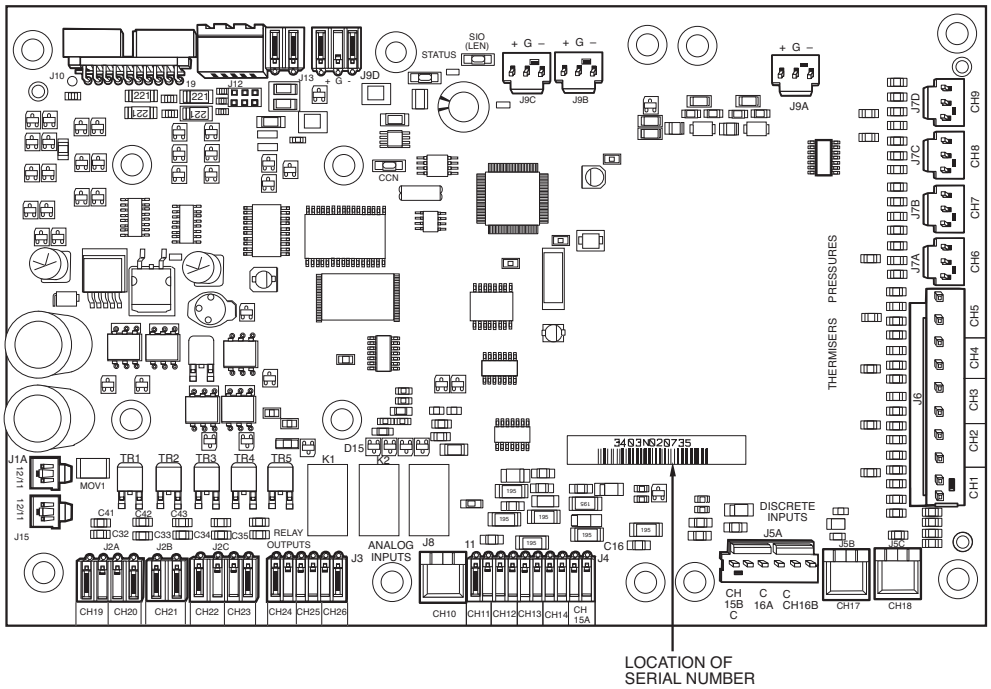

Fig. 3 — Main Base Board

Table 3 — Main Base Board Inputs and Outputs

DESCRIPTION	INPUT/OUTPUT	I/O TYPE	SCROLLING MARQUEE POINT NAME	CONNECTION POINT	
				Pin	Notation
Power (24 vac supply)	—	—	—	MBB-J1, MBB-J1A, MBB-J1B	
				11	24 vac
				12	Ground
Local Equipment Network	—	—	—	MBB-J9A, MBB-J9B, MBB-J9C, MBB-J9D	
				+	
				G	
				-	
Carrier Comfort Network® (CCN)	—	—	—	MBB-J12	
				+	
				G	
				-	
External Chilled Water Pump Interlock	PMPI	Switch	***INPUTS→GEN.I→LOCK***	MBB-J4-CH15A	
Chilled Water Flow Switch	CWFS	Switch	***INPUTS→GEN.I→LOCK***	MBB-J5A-CH15B	
				15B	
Demand Limit Switch #1	Demand Limit SW1	Switch	***INPUTS→GEN.I→DLS1***	MBB-J4-CH13	
Circuit A Discharge Pressure Transducer	DPTA	Pressure Transducer (0-5 VDC)	***PRESSURE→PRC.A→DP.A***	MBB-J7A-CH6	
				5V	5 vdc Ref.
				S	Signal
				R	Return
Circuit B Discharge Pressure Transducer	DPTB	Pressure Transducer (0-5 VDC)	***PRESSURE→PRC.B→DP.B***	MBB-J7C-CH8	
				5V	5 vdc Ref.
				S	Signal
				R	Return
Dual Chiller LWT Thermistor	DUAL	5k Thermistor	***TEMPERATURE→UNIT→CHWS***	MBB-J6-CH3	
Dual Set Point Input	Dual Set Point	Switch	***INPUTS→GEN.I→DUAL***	MBB-J4-CH12	
Entering Water Thermistor	EWT	5k Thermistor	***TEMPERATURE→UNIT→EWT***	MBB-J6-CH2	
Leaving Water Thermistor	LWT	5k Thermistor	***TEMPERATURE→UNIT→LWT***	MBB-J6-CH1	
Outdoor Air Thermistor	OAT	5k Thermistor	***TEMPERATURE→UNIT→OAT***	MBB-J6-CH4	
Pump #1 Interlock Pump #2 Interlock	PMP1 PMP2	Switch	***INPUTS→GEN.I→PUMP***	MBB-J5C-CH18	
				18	
				C	
Reverse Rotation Board	Reverse Rotation Board	Switch	***INPUTS→GEN.I→ELEC***	MBB-J5A-CH16B	
				16B	
Circuit A Suction Pressure Transducer	SPTA	Pressure Transducer (0-5 VDC)	***PRESSURE→PRC.A→SP.A***	MBB-J7B-CH7	
				5V	5 vdc Ref.
				S	Signal
				R	Return
Circuit B Suction Pressure Transducer	SPTB	Pressure Transducer (0-5 VDC)	***PRESSURE→PR.B→SP.B***	MBB-J7D-CH9	
				5V	5 vdc Ref.
				S	Signal
				R	Return
Unit Status	Remote Contact-Off-Enable	Switch	***INPUTS→GEN.I→ONOF***	MBB-J4-CH11	
Alarm Relay	ALM R	Relay	***OUTPUTS→GEN.O→ALRM***	MBB-J3-CH24	
Alert Relay	ALT R	Relay	***OUTPUTS→GEN.O→ALRT***	MBB-J3-CH25	
Cooler Heater	CL-HT	TRIAC	***OUTPUTS→GEN.O→CO.HT***	MBB-J2B-CH21	
Circuit A Minimum Load Control*	MLV-A	TRIAC	***OUTPUTS→CIR.A→HGB.A***	MBB-J2C-CH22	
Circuit B Minimum Load Control*	MLV-B	TRIAC	***OUTPUTS→CIR.B→HGB.B***	MBB-J2C-CH23	
Pump #1 Starter	PMP1	TRIAC	***OUTPUTS→GEN.O→PMP.1***	MBB-J2A-CH19	
Pump #2 Starter	PMP2	TRIAC	***OUTPUTS→GEN.O→PMP.2***	MBB-J2A-CH20	
Ready Relay	RDY R	Relay	***OUTPUTS→GEN.O→REDY***	MBB-J3-CH26	

* Controls discharge and liquid line isolation soleniods for 30RB120-190 brine units only.

Scroll Protection Module (SPM) — There is one SPM per compressor and it is responsible for controlling that compressor. See Fig. 4. The device controls the compressor contactor and the compressor crankcase heater. The SPM module also monitors the compressor motor temperature, and circuit high pressure switch. The SPM responds to commands from the MBB (main base board) and sends the MBB the results of the channels it monitors via the LEN (Local Equipment Network). See below for SPM board address information. See Table 4 for SPM inputs and outputs.

SPM-A1 DIP Switch	1	2	3	4	5	6	7	8
Address:	ON	OFF	OFF	OFF	ON	OFF	OFF	OFF

SPM-A2 DIP Switch	1	2	3	4	5	6	7	8
Address:	OFF	ON	OFF	OFF	ON	OFF	OFF	OFF

SPM-A3 DIP Switch	1	2	3	4	5	6	7	8
Address:	OFF	OFF	ON	OFF	ON	OFF	OFF	OFF

SPM-A4 DIP Switch	1	2	3	4	5	6	7	8
Address:	OFF	OFF	OFF	ON	ON	OFF	OFF	OFF

SPM-B1 DIP Switch	1	2	3	4	5	6	7	8
Address:	ON	OFF	OFF	OFF	OFF	ON	OFF	OFF

SPM-B2 DIP Switch	1	2	3	4	5	6	7	8
Address:	OFF	ON	OFF	OFF	OFF	ON	OFF	OFF

SPM-B3 DIP Switch	1	2	3	4	5	6	7	8
Address:	OFF	OFF	ON	OFF	OFF	ON	OFF	OFF

SPM-B4 DIP Switch	1	2	3	4	5	6	7	8
Address:	OFF	OFF	OFF	ON	OFF	ON	OFF	OFF

SPM-C1 DIP Switch	1	2	3	4	5	6	7	8
Address:	ON	OFF	OFF	OFF	OFF	OFF	ON	OFF

SPM-C2 DIP Switch	1	2	3	4	5	6	7	8
Address:	OFF	ON	OFF	OFF	OFF	OFF	ON	OFF

SPM-C3 DIP Switch	1	2	3	4	5	6	7	8
Address:	OFF	OFF	ON	OFF	OFF	OFF	ON	OFF

SPM-C4 DIP Switch	1	2	3	4	5	6	7	8
Address:	OFF	OFF	OFF	ON	OFF	OFF	ON	OFF

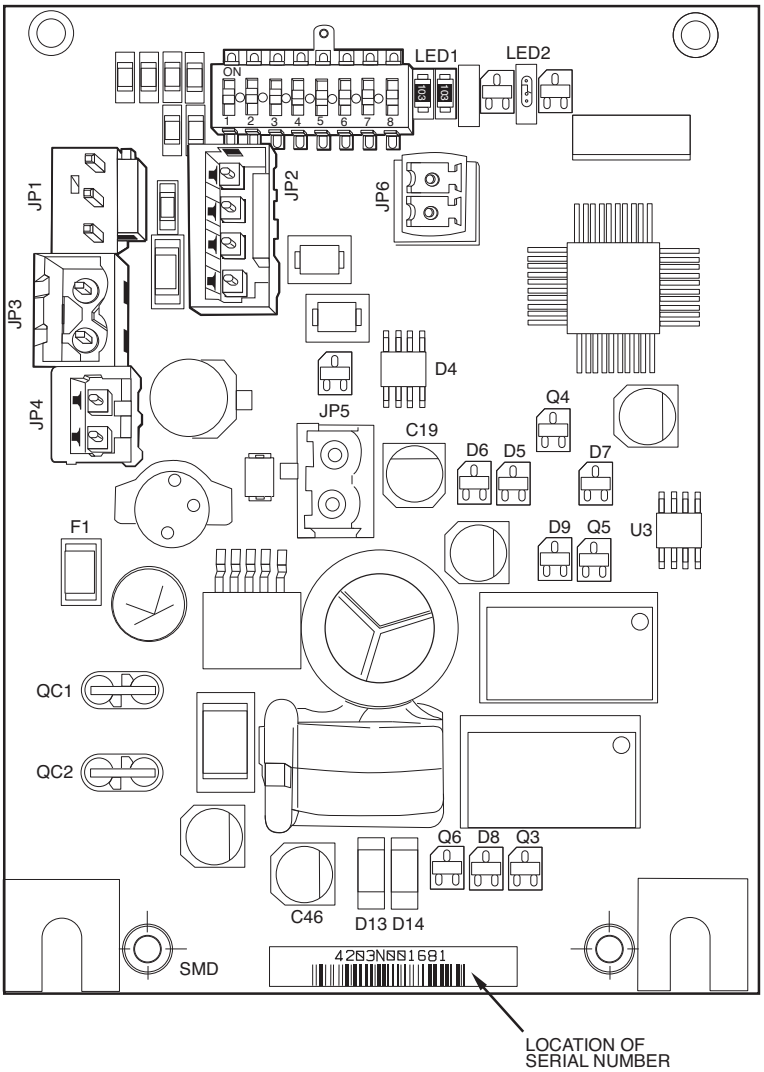

Fig. 4 — Scroll Protection Module

Electronic Expansion Valve (EXV) Board — At least one EXV board is used in all machines. There is one EXV board for 2 circuit machines. Three circuit machines have two EXV boards. See Fig. 5. The board is responsible for monitoring the return gas temperature thermistors. The board also signals the EXV motors to open or close. The electronic expansion valve board responds to commands from the MBB and sends the MBB the results of the channels it monitors via the LEN (local equipment network). See below for DIP switch information for EXV1 and EXV2. See Tables 5 and 6 for EXV inputs and outputs.

EXV1 DIP Switch	1	2	3	4	5	6	7	8
Address:	ON	ON	ON	ON	ON	ON	OFF	ON

EXV2 DIP Switch	1	2	3	4	5	6	7	8
Address:	OFF	ON	ON	ON	ON	ON	OFF	ON

Table 4 — Scroll Protection Module Inputs and Outputs*

DESCRIPTION	INPUT/OUTPUT	I/O TYPE	SCROLLING MARQUEE POINT NAME	CONNECTION POINT	
				Pin	Notation
Power (24 vac supply)	—	—	—	SPM-xn-J1	
				QC1	24 vac
				QC2	Ground
Local Equipment Network	—	—	—	SPM-xn-JP1	
				1	+
				2	G
				3	-
				SPM-xn-JP2	
				2	+
				3	G
				4	-
Circuit x High Pressure Switch	HPS-x	Switch	Not available	SPM-xn-JP3	
				1	
				2	
Compressor xn Motor Temperature	MTR-xn	PTC Thermistor	Not available	SPM-xn-JP4	
				1	
				2	
Compressor xn Contactor	Cxn	Relay	***OUTPUTS→CIR.x→CP.xn***	SPM-xn-JP5	
				1	
				2	
Crankcase Heater	CCH	Relay	***OUTPUTS→CIR.x→HT.xn***	SPM-xn-JP6	
				1	
				2	
Circuit x High Pressure Switch	HPS-x	Switch	Not available	SPM-xn-JP2	
				1	

* "x" denotes the circuit, A, B or C. "n" denotes the compressor number, 1, 2, 3, or 4.

Table 5 — EXV1 Board Inputs and Outputs

DESCRIPTION	INPUT/OUTPUT	I/O TYPE	SCROLLING MARQUEE POINT NAME	CONNECTION POINT	
				Pin	Notation
Power (24 vac supply)	—	—	—	EXV1-J1	
				11	24 vac
				12	Ground
Local Equipment Network	—	—	—	EXV1-J4	
				1	+
				2	G
				3	–
Circuit A Suction Gas Thermistor	SGTA	5k Thermistor	***TEMPERATURE→CIR.A→SGT.A***	EXV1-J3	
				THA	
Circuit B Suction Gas Thermistor	SGTB	5k Thermistor	***TEMPERATURE→CIR.B→SGT.B***	EXV1-J3	
				THB	
Circuit A EXV	EXV-A	Stepper Motor	***OUTPUTS→CIR.A→EXV.A***	EXV1-J2A	
				1	
				2	
				3	
				4	
Circuit B EXV	EXV-B	Stepper Motor	***OUTPUTS→CIR.B→EXV.B***	EXV1-J2B	
				1	
				2	
				3	
				4	

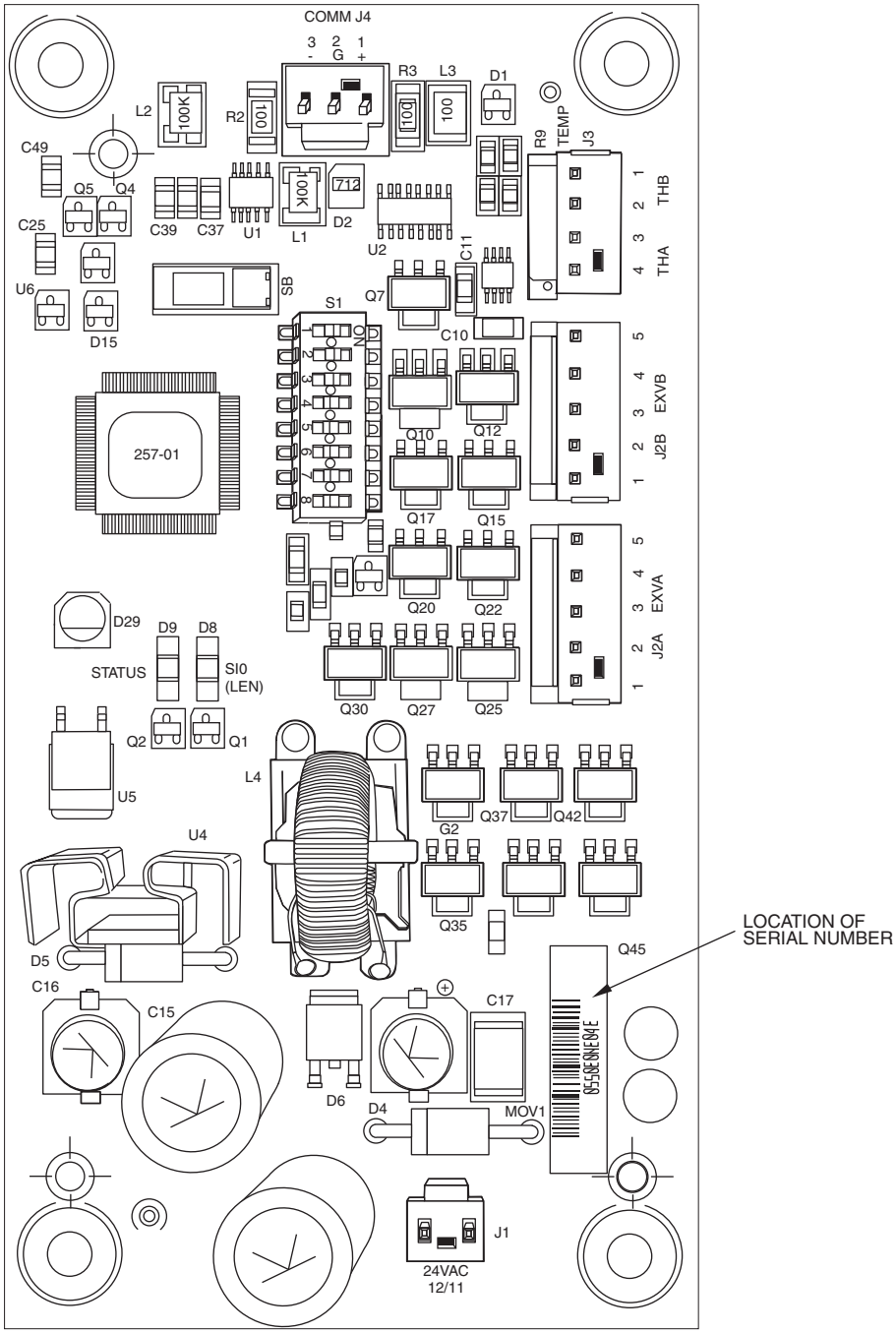

Fig. 5 — EXV Board

Fan Boards — At least one fan board is installed in each unit. See Fig. 6 and 7. There are two types of fan boards, with and without an analog output signal for the low ambient head pressure control fan speed controllers. If a unit does not have low ambient head pressure control installed, it will not have the analog connection terminals. The fan board responds to commands from the MBB and sends the MBB the results of the channels it monitors via the LEN. See below for fan board 1, 2 and 3 DIP switch addresses. See Tables 7-9 for inputs and outputs.

FAN BOARD 1 DIP Switch	1	2	3	4	5	6	7	8
Address:	OFF	ON	OFF	OFF	ON	OFF	ON	OFF

FAN BOARD 2 DIP Switch	1	2	3	4	5	6	7	8
Address:	ON	ON	OFF	OFF	ON	OFF	ON	OFF

FAN BOARD 3 DIP Switch	1	2	3	4	5	6	7	8
Address:	OFF	OFF	ON	OFF	ON	OFF	ON	OFF

Table 6 — EXV2 Inputs and Outputs

DESCRIPTION	INPUT/OUTPUT	I/O TYPE	SCROLLING MARQUEE POINT NAME	CONNECTION POINT	
				Pin	Notation
Power (24 vac supply)	—	—	—	EXV2-J1	
				11	24 vac
				12	Ground
Local Equipment Network	—	—	—	EXV2-J4	
				1	+
				2	G
				3	–
Circuit C Suction Gas Thermistor	SGTC	5k Thermistor	***TEMPERATURE→CIR.C→SGT.C***	EXV2J3	
				THA	
Circuit C EXV	EXV-C	Stepper Motor	***OUTPUTS→CIR.C→EXV.C***	EXV2-J2A	
				1	
				2	
				3	
				4	

NOTE: EXV2 inputs and outputs are only used on 30RB210-300.

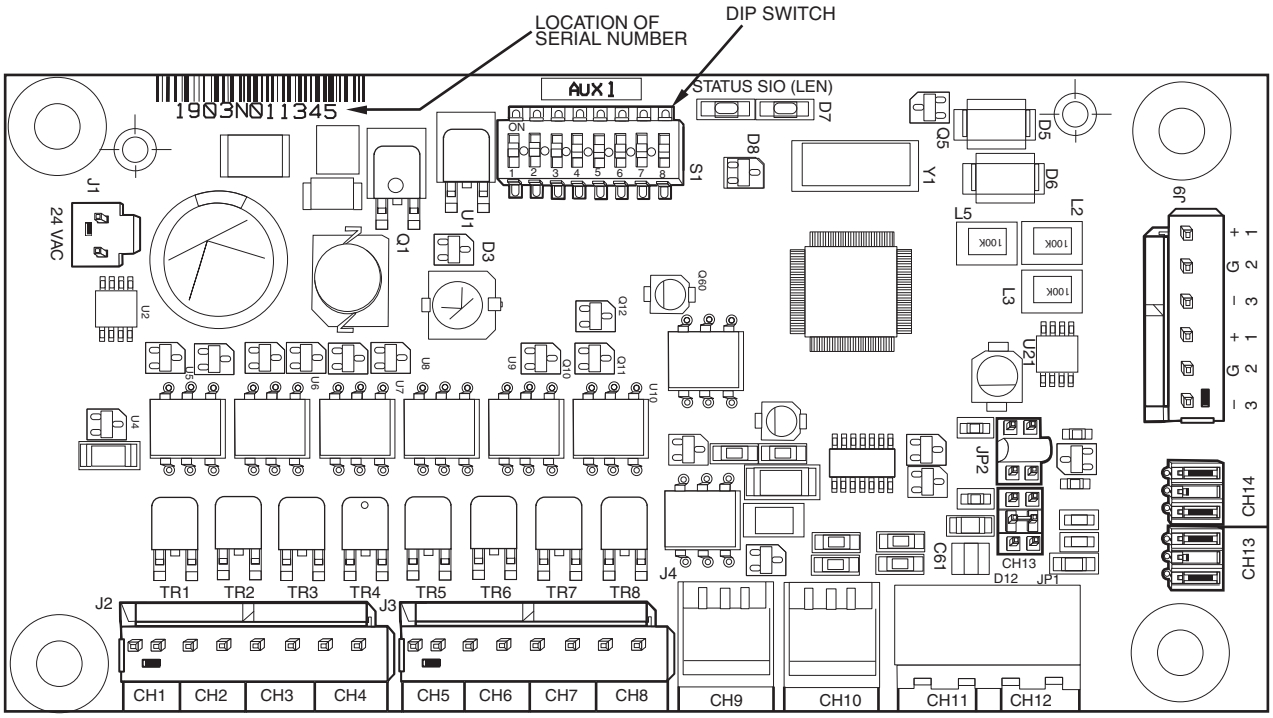

Fig. 6 — Fan Board (AUX 1) with Low Ambient Temperature Head Pressure Control

Table 7 — Fan Board 1 (AUX1, AUX2) Outputs*

DESCRIPTION	INPUT/OUTPUT	I/O TYPE	SCROLLING MARQUEE POINT NAME	CONNECTION POINT	
				Pin	Notation
Power (24 vac supply)	—	—	—	FB1-J1	
				11	24 vac
				12	Ground
Local Equipment Network	—	—	—	FB1-J9	
				+	
				G	
				-	
				+	
				G	
				-	
Circuit A Low Ambient Temperature Head Pressure Control Speed Signal	MM-A†	0-10 VDC	***OUTPUTS→CIR.A→SPD.A***	FB1-CH9	
				+	
				-	
Circuit B Low Ambient Temperature Head Pressure Control Speed Signal (sizes 060-150, 210-250)	MM-B†	0-10 VDC	***OUTPUTS→CIR.B→SPD.B***	FB1-CH10	
				+	
				-	
Outdoor Fan Motor 1	OFM1	TRIAC		FB1-J2-CH1 (sizes 060-110) FB1-J2-CH2 (sizes 120-150, 210-250) FB1-J2-CH3 (sizes 160-190, 275, 300, Duplex sizes 315-390)	
Outdoor Fan Motor 2	OFM2	TRIAC		FB1-J2-CH2 (sizes 060-110) FB1-J2-CH3 (sizes 120-150, 210-250) FB1-J2-CH4 (sizes 160-190, 275, 300, Duplex sizes 315-390)	
Outdoor Fan Motor 3	OFM3	TRIAC		FB1-J2-CH3 (sizes 060,070,090-110) FB1-J3-CH5 (size 080) FB1-J2-CH1 (sizes 120-150, 210-250) FB1-J2-CH2 (sizes 160-190, 275, 300, Duplex sizes 315-390)	
Outdoor Fan Motor 4	OFM4	TRIAC		FB1-J2-CH4 (sizes 060,070,130, 150,210-250) FB1-J3-CH6 (size 080) FB1-J3-CH7 (sizes 090-110) FB1-J3-CH5 (sizes 160-190, 275-300, Duplex sizes 315-390)	
Outdoor Fan Motor 5	OFM5	TRIAC		FB1-J3-CH5 (sizes 090-110) FB1-J3-CH6 (sizes 120-150, 210-250) FB1-J2-CH1 (sizes 160-190, 275-300, Duplex sizes 315-390)	
Outdoor Fan Motor 6	OFM6	TRIAC		FB1-J3-CH6 (sizes 090-110, 160-190, 275-300, Duplex sizes 315-390) FB1-J3-CH7 (sizes 120-150, 210-250)	
Outdoor Fan Motor 7	OFM7	TRIAC		FB1-J3-CH5 (sizes 120-150, 210-250)	
Outdoor Fan Motor 8	OFM8	TRIAC		FB1-J3-CH8 (sizes 120-150, 210-250)	

*Fan boards 1 and 2 will use the AUX1 board when the low ambient temperature head pressure control option is installed.
†Supplied on AUX1 board only

NOTE: Fan Board 1 is used on 30RB060-390.

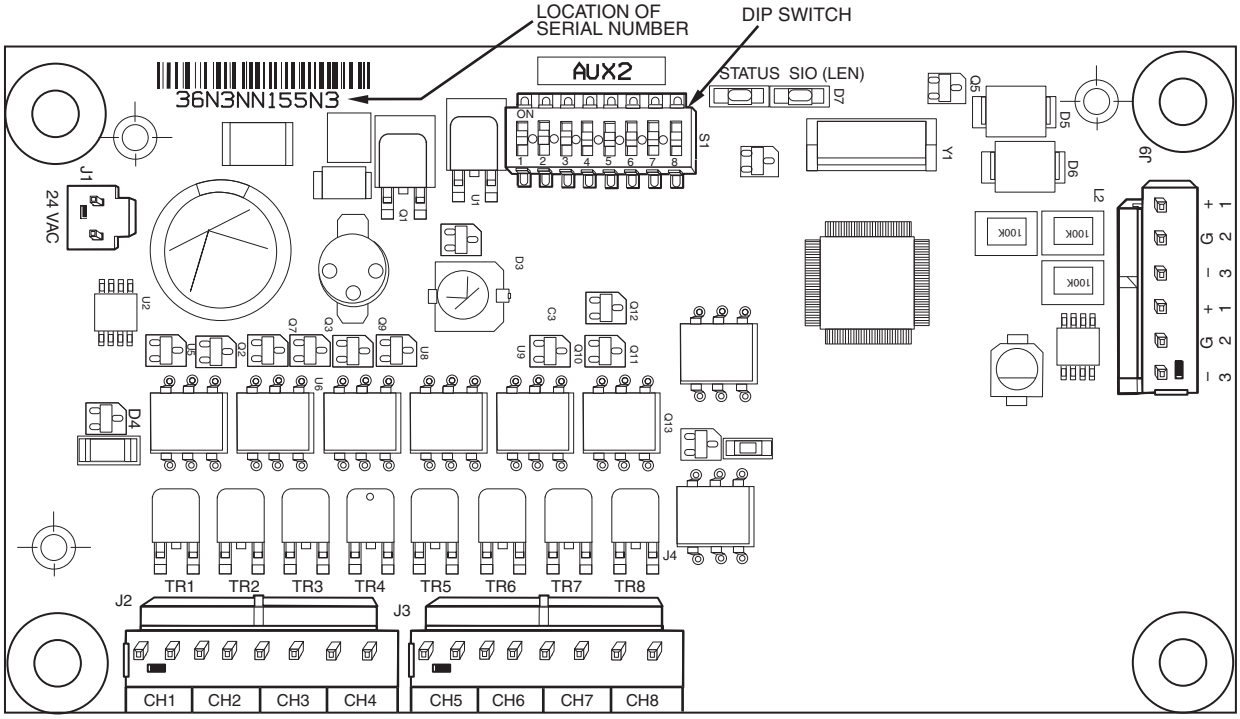

Fig. 7 — Fan Board (AUX 2) without Low Ambient Temperature Head Pressure Control

Table 8 — Fan Board 2 (AUX1, AUX2) Outputs*

DESCRIPTION	INPUT/OUTPUT	I/O TYPE	SCROLLING MARQUEE POINT NAME	CONNECTION POINT	
				Pin	Notation
Power (24 vac supply)	—	—	—	FB2-J1	
				11	24 vac
				12	Ground
Local Equipment Network	—	—	—	FB2-J9	
				+	
				G	
				-	
				+	
				G	
				-	
Circuit B Low Ambient Temperature Head Pressure Control Speed Signal (sizes 160-190, 275-300, 315-400)	MM-B†	0-10 VDC	***OUTPUTS→CIR.B→SPD.B***	FB2-CH9	
				+	
				-	
Outdoor Fan Motor 7	OFM7†	TRIAC		FB2-J2-CH2 (sizes 160, 170, 315-345, 360B) FB2-J2-CH3 (sizes 190, 275, 300, 360A, 390)	
Outdoor Fan Motor 8	OFM8	TRIAC		FB2-J2-CH3 (sizes 160, 170, 315-345, 360B) FB2-J2-CH4 (sizes 190, 275, 300, 360A, 390)	
Outdoor Fan Motor 9	OFM9	TRIAC		FB2-J2-CH1 (sizes 160, 170, 315-345, 360B) FB2-J2-CH2 (sizes 190, 275, 300, 360A, 390)	
Outdoor Fan Motor 10	OFM10	TRIAC		FB2-J2-CH4 (sizes 160, 170, 315-345, 360B) FB2-J3-CH5 (sizes 190, 275, 300, 360A, 390)	
Outdoor Fan Motor 11	OFM11	TRIAC		FB2-J2-CH1 (sizes 190, 275-300, 360A, 390)	
Outdoor Fan Motor 12	OFM12	TRIAC		FB2-J3-CH6 (sizes 190, 275-300, 360A, 390)	

*Fan boards 1 and 2 will use the AUX1 board when the low ambient temperature head pressure control option is installed.
†Output only on units with low ambient temperature head pressure control installed (AUX1).

NOTE: Fan Board 2 used on 30RB160-190, 275-300, 315-390.

Table 9 — Fan Board 3 (AUX1) Inputs and Outputs

DESCRIPTION	INPUT/OUTPUT	I/O TYPE	SCROLLING MARQUEE POINT NAME	CONNECTION POINT (Unit Size)	
				Pin	Notation
Power (24 vac supply)	—	—	—	FB3-J1	
				11	24 vac
				12	Ground
Local Equipment Network	—	—	—	FB3-J9	
				+	
				G	
				-	
				+	
				G	
				-	
Circuit C Discharge Pressure Transducer	DPTC	Pressure Transducer (0-5 VDC)	***PRESSURE→PRC.C→DP.C***	FB3-J7-CH13	
Circuit C Suction Pressure Transducer	SPTC	Pressure Transducer (0-5 VDC)	***PRESSURE→PRC.C→SP.C***	FB3-J8-CH14	
Minimum Load Value Circuit C	MLV-C*	TRIAC	***OUTPUTS→CIR.C→HGB.C***	FB3-J3-CH7 (sizes 210-300)	
Circuit C Low Ambient Temperature Head Pressure Control Speed Signal (sizes 210-300)	MM-C†	0-10 VDC	***OUTPUTS→CIR.C→SPD.C***	FB3-CH9	
				+	
				-	
Outdoor Fan Motor 9	OFM9	TRIAC		FB3-J2-CH2 (sizes 210, 225) FB3-J2-CH3 (size 250)	
Outdoor Fan Motor 10	OFM10	TRIAC		FB3-J2-CH3 (sizes 210, 225) FB3-J2-CH4 (size 250)	
Outdoor Fan Motor 11	OFM11	TRIAC		FB3-J2-CH1 (sizes 210, 225) FB3-J2-CH2 (size 250)	
Outdoor Fan Motor 12	OFM12	TRIAC		FB3-J2-CH3 (sizes 210, 225) FB3-J2-CH4 (size 250)	
Outdoor Fan Motor 13	OFM13	TRIAC		FB3-J2-CH1 (size 250) FB3-J2-CH2 (size 275) FB3-J2-CH3 (size 300)	
Outdoor Fan Motor 14	OFM14	TRIAC		FB3-J3-CH6 (size 250) FB3-J2-CH3 (size 275) FB3-J2-CH4 (size 300)	
Outdoor Fan Motor 15	OFM15	TRIAC		FB3-J2-CH1 (size 275) FB3-J2-CH2 (size 300)	
Outdoor Fan Motor 16	OFM16	TRIAC		FB3-J2-CH4 (size 275) FB3-J3-CH5 (size 300)	
Outdoor Fan Motor 17	OFM17	TRIAC		FB3-J2-CH1 (size 300)	
Outdoor Fan Motor 18	OFM18	TRIAC		FB3-J3-CH6 (size 300)	

*Controls discharge and liquid line isolation soleniods for 30RB210-300 brine units.
†Low ambient temperature head pressure control output is on AUX1 board only.

NOTE: Fan Board 3 used on 30RB210-300.

Reverse Rotation Board — The reverse rotation board monitors the three-phase electrical system to provide phase reversal, phase loss and under-voltage protection. See Fig. 8. The reverse rotation board has two LEDs (light-emitting diodes) and two adjustable dial settings. Under normal conditions, the upper LED will light up green. The lower LED is red and will flash (phase reversal) or turn on solid (phase loss and under-voltage) according to the conditions sensed.

DIAL SETTINGS — The reverse rotation board has two dials. See Fig. 8. The upper dial should be set to match the incoming three-phase voltage to the chiller with no compressors running. This dial must be adjusted for 208/230-v chillers operating on 208-v power supply. The dial should be adjusted to 200-v minimum setting for this case. The lower dial is used for trip delay and should be set fully counterclockwise to the minimum 0.1 second setting.

PHASE REVERSAL PROTECTION — The control monitors the three-phase power sequence supplied at terminals L1, L2, and L3. If the control senses an incorrect phase relationship, the relay contacts (11/14) on the board will open. The relay contacts will automatically reset when the correct phase sequence is applied.

PHASE LOSS AND UNDER-VOLTAGE PROTECTION — If the reverse rotation board senses that any one of the three phase inputs has no AC voltage or that any one phase has dropped more than 20% below the voltage dial setting, the relay contacts (11/14) on the board will open. Contacts will reset automatically when all three phases are present, in the correct sequence and are within the limits of the voltage dial setting.

LED STATUS	FUNCTION
Upper (green) LED on continuously	Relay contacts closed (normal operation)
Lower (red) LED blinking	Relay contacts open (phase reversal has occurred)
Lower (red) LED on continuously	Relay contacts open (phase loss or under-voltage has occurred)
Upper (green) LED off	Power not present at L1, L2, L3 (off)

NOTE: Normal operation of the reverse rotation board (for example, no faults are detected) results in a closed contact being applied to the MBB (plug J5A, channel 16B) through the closed 11/14 relay contact.

Enable-Off-Remote Contact Switch — This switch is installed in all units and provides the owner and service person with a local means of enabling or disabling the machine. It is a 3-position switch used to control the chiller. When switched to the Enable position the chiller is under its own control. Move the switch to the Off position to shut the chiller down. Move the switch to the Remote Contact position and a field-installed dry contact can be used to start the chiller. The contacts must be capable of handling a 24-vac, 20-mA load. In the Enable and Remote Contact (dry contacts closed) positions, the chiller is allowed to operate and respond to the scheduling configuration, CCN configuration and set point control.

Emergency On/Off Switch — This switch is installed in all units. The Emergency On/Off switch should only be used when it is required to shut the chiller off immediately. Power to the MBB, energy management module, and scrolling marquee display is interrupted when this switch is off and all outputs from these modules will be turned off.

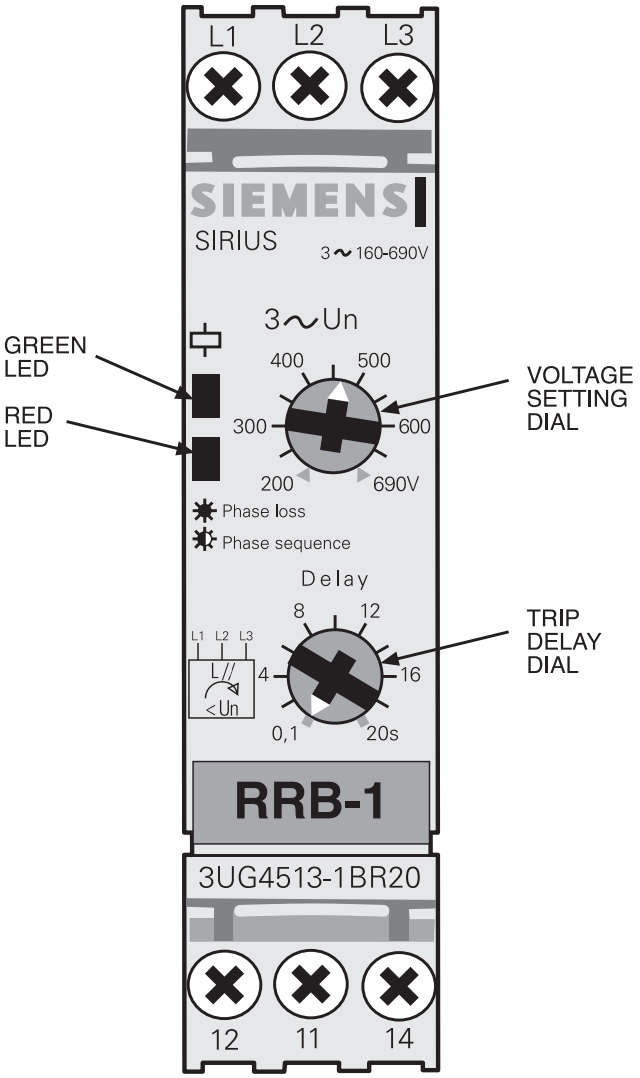

Fig. 8 — Reverse Rotation Board (RRB)

Energy Management Module (EMM) — The EMM is available as a factory-installed option or as a field-installed accessory. The EMM receives 4 to 20 mA inputs for the temperature reset, cooling set point reset and demand limit functions. The EMM also receives the switch inputs for the field-installed second stage 2-step demand limit, ice done, occupancy overrides, and remote lockout functions. The EMM communicates the status of all inputs with the MBB, and the MBB adjusts the control point, capacity limit, and other functions according to the inputs received. The EMM generates a 0 to 10 vdc output that directly corresponds to the unit percent total capacity. Contacts indicating unit run status and shutdown status are provided. See Table 10 and Fig. 9.

⚠ CAUTION

Care should be taken when interfacing with other manufacturer's control systems due to possible power supply differences, full wave bridge versus half wave rectification, which could lead to equipment damage. The two different power supplies cannot be mixed. *Comfort*Link™ controls use half wave rectification. A signal isolation device should be utilized if incorporating a full wave bridge rectifier signal generating device is used.

Energy Management Module Heat Reclaim (EMM HR) — The EMM HR is available as a factory-installed option. The EMM HR communicates the status of all of the inputs with the MBB. The MBB then determines the appropriate operating mode. Operating modes are: normal cooling, heat reclaim, and simultaneous one circuit cooling/one circuit heat reclaim. See Table 11 and Fig. 9.

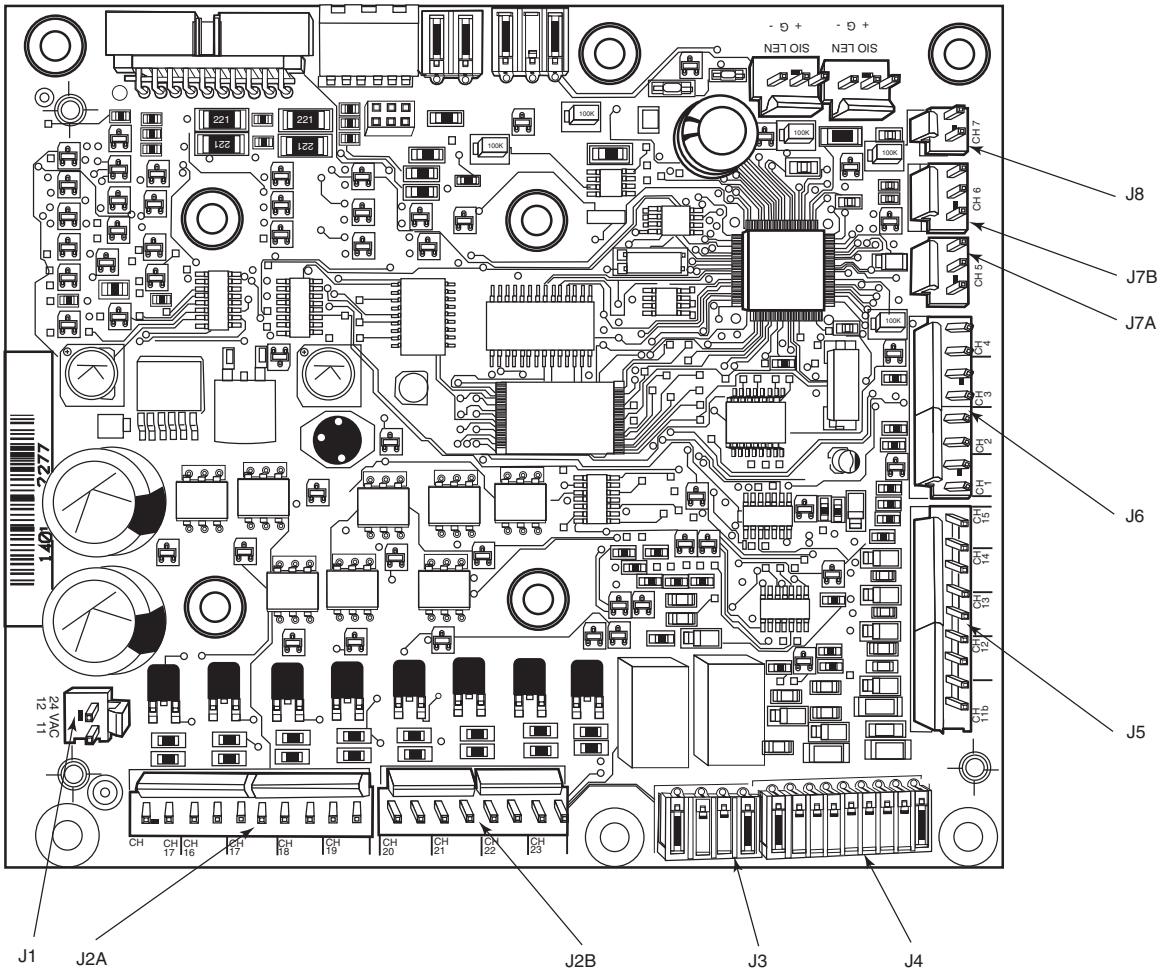

Fig. 9 — Energy Management Module and Energy Management Heat Reclaim Module

Table 10 — Energy Management Module (EMM) Inputs and Outputs

INPUT	DESCRIPTION	I/O TYPE	I/O POINT NAME	CONNECTION POINT
4-20 mA or 0-5 vdc Demand Limit	4-20 mA Demand Limit	0-5 vdc*	***INPUTS→GEN.I→DMND***	EMM-J7B-CH6
4-20 mA or 0-5 vdc Temperature Reset/Setpoint	4-20 mA Temperature Reset/ Set point	0-5 vdc*	***INPUTS→GEN.I→RSET***	EMM-J7A-CH5
Demand Limit SW2	Demand Limit Step 2	Switch Input	***INPUTS→GEN.I→DLS2***	EMM-J4-CH9
Ice Done	Ice Done Switch	Switch Input	***INPUTS→GEN.I→ICE.D***	EMM-J4-CH11A
Occupancy Override	Occupied Schedule Override	Switch Input	***INPUTS→GEN.I→OCCS***	EMM-J4-CH8
Remote Lockout Switch	Chiller Lockout	Switch Input	***INPUTS→GEN.I→RLOC***	EMM-J4-CH10
SPT	Space Temperature Thermistor	10k Thermistor	***TEMPERATURE→UNIT→SPT***	EMM-J6-CH2
OUTPUT	**DESCRIPTION**	**I/O TYPE**	**I/O POINT NAME**	**CONNECTION POINT**
% Total Capacity		0-10 vdc	***OUTPUTS→GEN.O→CATO***	EMM-J8-CH7
RUN R	Run Relay	Relay	***OUTPUTS→GEN.O→RUN***	EMM-J3-CH24
SHD R	Shutdown Relay	Relay	***OUTPUTS→GEN.O→SHUT***	EMM-J3-CH25

* 250 ohm, 1/2 watt resistor required for 4-20 mA input.

Table 11 — Energy Management Module Heat Reclaim (EMM HR) Inputs and Outputs

INPUT	DESCRIPTION	I/O TYPE	I/O POINT NAME	CONNECTION POINT
PD.B	Circuit B Pumpdown Pressure Transducer	Pressure Transducer	***PRESSURE→CIR.B→PD.B***	EMM-J8-CH6
PD.A	Circuit A Pumpdown Pressure Transducer	Pressure Transducer	***PRESSURE→CIR.A→PD.A***	EMM-J8-CH5
HRS.B	Circuit B Liquid Subcooling	—	***TEMPERATURE→CIR.B→HRS.B***	—
HRS.A	Circuit A Liquid Subcooling	—	***TEMPERATURE→CIR.A→HRS.A***	—
HRT.B	Circuit B Liquid Temperature	Temperature	***TEMPERATURE→CIR.B→HRT.B***	EMM-J5-CH4
HRT.A	Circuit A Liquid Temperature	Temperature	***TEMPERATURE→CIR.A→HRT.A***	EMM-J5-CH3
HEWT	Heat Reclaim Entering Fluid	Temperature	***TEMPERATURE→UNIT→HEWT***	EMM-J5-CH2
HLWT	Heat Reclaim Leaving Fluid	Temperature	***TEMPERATURE→UNIT→HLWT***	EMM-J5-CH1
C.FLO	Condenser Flow Switch Status	Switch	***INPUTS→GEN.I→C.FLO***	EMM-J5-CH15
—	Power (24 vac supply)	—	—	EMM-J1-CH11,12
—	Local Equipment Network	—	—	EMM-J9
OUTPUT	**DESCRIPTION**	**I/O TYPE**	**I/O POINT NAME**	**CONNECTION POINT**
	Condenser 0-10 VDC Water Valve Output	0-10 VDC	—	EMM-J8-CH7
CND.P	Heat Reclaim Condenser Pump Status	Contactor	***OUTPUTS→GEN.O→CND.P***	EMM-J2-CH16
CN.HT	Heat Reclaim Condenser Heater	Contactor	***OUTPUTS→GEN.O→CN.HT***	EMM-J2-CH17
HR2.A	Circuit A, Leaving Air-Cooled Cond Solenoid	Contactor	***OUTPUTS→CIR.A→HR2.A***	EMM-J2-CH18
HR2.B	Circuit B, Leaving Air-Cooled Cond Solenoid	Contactor	***OUTPUTS→CIR.B→HR2.B***	EMM-J2-CH19
HR3.A	Circuit A, Entering Water-Cooled Cond Solenoid	Contactor	***OUTPUTS→CIR.A→HR3.A***	EMM-J2-CH20
HR3.B	Circuit B, Entering Water-Cooled Cond Solenoid	Contactor	***OUTPUTS→CIR.B→HR3.B***	EMM-J2-CH21
HR4.A	Circuit A, Leaving Water-Cooled Cond Solenoid	Contactor	***OUTPUTS→CIR.A→HR4.A***	EMM-J2-CH22
HR4.B	Circuit B, Leaving Water-Cooled Cond Solenoid	Contactor	***OUTPUTS→CIR.B→HR4.B***	EMM-J2-CH23
HR1.A	Circuit A, Entering Air-Cooled Cond Solenoid	Contactor	***OUTPUTS→CIR.A→HR1.A***	EMM-J3-CH24
HR1.B	Circuit B, Entering Air-Cooled Cond Solenoid	Contactor	***OUTPUTS→CIR.B→HR1.B***	EMM-J3-CH25

Local Equipment Network — Information is transmitted between modules via a 3-wire communication bus or LEN (Local Equipment Network). External connection to the LEN bus is made at TB3.

Board Addresses — All boards (except the main base board and the energy management module) have 8-position DIP switches. Addresses for all boards are listed with the input/output tables for each board.

Control Module Communication

RED LED — Proper operation of the control boards can be visually checked by looking at the red status LEDs (light-emitting diodes). When operating correctly, the red status LEDs will blink in unison at a rate of once every 2 seconds. If the red LEDs are not blink in unison, verify that correct power is being supplied to all modules. Be sure that the main base board (MBB) is supplied with the current software. If necessary, reload current software. If the problem still persists, replace the MBB. A red LED that is lit continuously or blinking at a rate of once per second or faster indicates that the board should be replaced.

GREEN LED — All boards have a green LEN (SIO) LED which should be blinking whenever power is on. If the LEDs are not blinking as described check LEN connections for potential communication errors at the board connectors. See Input/Output Tables for LEN connector designations. A 3-wire bus accomplishes communication between modules. These 3 wires run in parallel from module to module. The J9A connector on the MBB provides communication directly to the scrolling marquee display or the Navigator™ display module.

YELLOW LED — The MBB has one yellow LED. The Carrier Comfort Network® (CCN) LED will blink during times of network communication.

Carrier Comfort Network (CCN) Interface — All 30RB units can be connected to the CCN, if desired. The communication bus wiring is a shielded, 3-conductor cable with drain wire and is field supplied and installed. The system elements are connected to the communication bus in a daisy chain arrangement. The positive pin of each system element communication connector must be wired to the positive pins of the system elements on either side of it, that is also required for the negative and signal ground pins of each system element. Wiring connections for CCN should be made at TB3. Consult the CCN Contractor's Manual for further information. See Fig. 10.

NOTE: Conductors and drain wire must be 20 AWG (American Wire Gage) minimum stranded, tinned copper. Individual conductors must be insulated with PVC, PVC/nylon, vinyl, Teflon, or polyethylene. An aluminum/polyester 100% foil shield and an outer jacket of PVC, PVC/nylon, chrome vinyl, or Teflon with a minimum operating temperature range of –20 C to 60 C is required. See Table 12 for recommended wire manufacturers and part numbers.

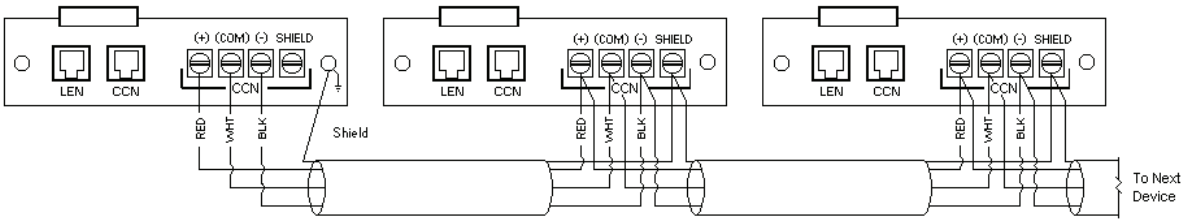

Fig. 10 — *Comfort*Link™ CCN Communication Wiring

Table 12 — CCN Communication Bus Wiring

MANUFACTURER	PART NUMBER	
	Regular Wiring	Plenum Wiring
Alpha	1895	—
American	A21451	A48301
Belden	8205	884421
Columbia	D6451	—
Manhattan	M13402	M64430
Quabik	6130	—

It is important when connecting to a CCN communication bus that a color-coding scheme be used for the entire network to simplify the installation. It is recommended that red be used for the signal positive, black for the signal negative, and white for the signal ground. Use a similar scheme for cables containing different colored wires.

At each system element, the shields of its communication bus cables must be tied together. If the communication bus is entirely within one building, the resulting continuous shield must be connected to a ground at one point only. If the communication bus cable exits from one building and enters another, the shields must be connected to grounds at the lightning suppressor in each building where the cable enters or exits the building (one point per building only). To connect the unit to the network:

1. Turn off power to the control box.
2. Cut the CCN wire and strip the ends of the red (+), white (ground), and black (–) conductors. (Substitute appropriate colors for different colored cables.)
3. Connect the red wire to (+) terminal on TB3 of the plug, the white wire to COM terminal, and the black wire to the (–) terminal.
4. The RJ14 CCN connector on TB3 can also be used, but is only intended for temporary connection (for example, a laptop computer running Service Tool).

IMPORTANT: A shorted CCN bus cable will prevent some routines from running and may prevent the unit from starting. If abnormal conditions occur, disconnect the CCN bus. If conditions return to normal, check the CCN connector and cable. Run new cable if necessary. A short in one section of the bus can cause problems with all system elements on the bus.

Configuration Options

MINIMUM LOAD CONTROL (***Configuration→UNIT →HGBP***) reduces the capacity of the 30RB chiller below the lowest standard capacity step by use of hot gas bypass. This capacity step reduction provides more precise control of the leaving water temperature. **The minimum load valve accessory cannot be used on units configured for brine as the cooler fluid type** (***Configuration→ SERV→FLUD***). Refer to Brine Chiller Operation for additional information.

Minimum Load Control can be configured in three different ways. If Minimum Load Control is not used, ***HGBP*** must be set to **0**. If ***HGBP*** is set to **1**, the control will activate the minimum load control valve when the machine is started only. This will be the first step of capacity. If ***HGBP*** is set to **2**, all stages of capacity can utilize the minimum load control valve. If ***HGBP*** is set to **3**, the minimum load control valve will be used only when the circuit has a high pressure override active. This will reduce the capacity of the circuit.

RAMP LOADING (***Configuration→OPTN→RL.S***) limits the rate of change of leaving fluid temperature. If the unit is in a Cooling mode and configured for Ramp Loading, the control makes 2 comparisons before deciding to change stages of capacity. The control calculates a temperature difference between the control point and leaving fluid temperature. If the difference is greater than 4° F (2.2° C) and the rate of change (°F or °C per minute) is more than the configured Cool Ramp Loading (***Setpoints→COOL→CRMP***), the control does not allow any changes to the current stage of capacity.

MINUTES OFF TIME (***Configuration→OPTN→ DELY***) is a time delay added to the start when the machine is commanded ON. This is a field configurable item from 1 to 15 minutes. The factory default is 1 minute. This feature is useful when multiple units are installed. Staggering the start will reduce the inrush potential.

Dual Chiller Control — The dual chiller routine is available for the control of two parallel units supplying chilled fluid on a common loop. This control is designed for a parallel fluid flow arrangement only. One chiller must be configured as the master chiller, the other as the slave chiller. An additional leaving fluid temperature thermistor (Dual Chiller LWT) must be installed in the common chilled water piping as described in the Installation Instructions for both the master and slave chillers. See the Field Wiring section in the 30RB Installation Instructions for dual chiller LWT sensor control wiring. A chilled water flow switch is factory-installed for each chiller.

Parallel chiller control with dedicated pumps is recommended. Chiller must start and stop its own water pump located on its own piping. If pumps are not dedicated for each chiller, chiller isolation valves are required: each chiller must open and close its own isolation valve through the control (valve shall be connected to the pump outputs). Pump Control is enabled as described in the Cooler Pump Control section on page 31. One additional parameter is set for the dual chiller control. Lag Unit Pump Select (***Configuration→RSET →LAGP***) allows the user to configure the control to energize the pump for the lag chiller once the unit enters an occupied time period or delay the control until the lag chiller is started. It is recommended that this parameter be set to **0**, OFF IF UNIT STOPPED.

The control of the slave chiller is directed through commands emitted by the master chiller. The slave chiller has no action in master/slave operations it shall only verify that CCN communication with its master is present. See the Dual Chiller Sequence of Operation section on page 45.

Use dual chiller control to designate a lead chiller between the master and slave chiller. Configure the Lead/Lag Balance Select (***Configuration→RSET→LLBL***) to **ENBL** to base the selection on the Lead/Lag Balance Delta (***Configuration →RSET→LLBD***) between the master and slave run hours. If the run hour difference between the master and the slave remains less than ***LLBD***, the chiller designated as the lead will remain the lead chiller. The Lead/Lag changeover between the master and the slave chiller due to hour balance will occur during chiller operating odd days, such as day 1, day 3, and day 5 of the month, at 12:00 a.m. If a lead chiller is not designated, the master chiller will always be designated the lead chiller.

The dual chiller control algorithm has the ability to delay the start of the lag chiller in two ways. The Lead Pulldown Time (***Configuration→RSET→LPUL***) provides a field configurable time delay of 0 to 60 minutes. This time delay gives the lead chiller a chance to remove the heat that the chilled water loop picked up while being inactive during an unoccupied period. The Lead Pulldown Time parameter is a one-time time delay initiated after starting the lead chiller, manually or by a schedule, before checking whether to start an additional chiller. This routine provides the lead chiller an opportunity to pull down the loop temperature before starting another chiller. The second time delay, Lead/Lag Delay (***Configuration →RSET→LLDY***) is a time delay imposed between the last stage of the lead chiller and the start of the lag chiller. This prevents enabling the lag chiller until the lead/lag delay timer has expired. See Tables 13 and 14.

Table 13 — Configuring the Master Chiller

MODE	KEYPAD ENTRY	DISPLAY	ITEM EXPANSION	COMMENT
CONFIGURATION	ENTER	**DISP**		
	↓	**UNIT**		
	↓	**SERV**		
	↓	**OPTN**		
	ENTER	CCNA	CCN Address	Confirm address of chiller. The master and slave chiller must have different addresses.
	ENTER	1		Factory default address is 1.
	ESCAPE	CCNA		
	↓	CCNB	CCN Bus Number	Confirm the bus number of the chiller. The master and slave chiller must be on the same bus.
	ENTER	0		Factory default is 0.
	ESCAPE	CCNB		
	ESCAPE	**OPTN**		
	↓	**RSET**	Reset Cool and Heat Tmp	
	ENTER	CRST	Cooling Reset Type	
	↓ x 5	MSSL	Master/Slave Select	
	ENTER	0	Disable	
	ENTER	0	Disable	Flashing to indicate Edit mode. May require Password.
	↑	1	Master	Use up arrows to change value to 1.
	ENTER	1		Accepts the change.
	ESCAPE	MSSL		
	↓	SLVA	Slave Address	
	ENTER	1		
	ENTER	1		Flashing to indicate Edit mode.
	↑	2		Use up arrows to change value to 2. This address must match the address of the slave chiller.
	ENTER	2		Accepts the change.
	ESCAPE	SLVA		
	↓	LLBL	Lead/Lag Balance Select	
	ENTER	ENBL		Factory Default is ENBL
	ESCAPE	LLBL		
	↓	LLBD	Lead/Lag Balance Delta	
	ENTER	168		Factory Default is 168.
	ESCAPE	LLBD		
	↓	LLDY	Lead/Lag Start Delay	
	ENTER	10		Factory Default is 10.
	ESCAPE	LLDY		
	↓	LAGP	Lag Unit Pump Select	
	ENTER	0	Off if U Stp	Factory Default is 0, Off if unit is stopped. Master and slave chiller must be configured to the same value.
	ESCAPE	LAGP		
	↓	LPUL	Lead Pulldown Time	
	ENTER	0		Factory Default is 0.
	ESCAPE			
	ESCAPE			At mode level.
OPERATING MODES	ENTER	**SLCT**		
	ENTER	**OPER**	Operating Control Type	
	ENTER	0	Switch Control	Master chiller should be configured for job requirements, Switch Control, Time Schedule, or CCN.
	ESCAPE			At mode level.

NOTE: **Bold** values indicate sub-mode level.

Table 14 — Configuring the Slave Chiller

MODE	KEYPAD ENTRY	DISPLAY	ITEM EXPANSION	COMMENT
CONFIGURATION	ENTER	**DISP**		
	↓	**UNIT**		
	↓	**SERV**		
	↓	**OPTN**		
	ENTER	CCNA	CCN Address	Confirm address of chiller. The master and slave chiller must have different addresses.
	ENTER	1		Factory default address is 1. The slave chiller address must match what was programmed in the Master Chiller SLVA item.
	ENTER	1		Flashing to indicate Edit Mode.
	↑	2		This item must match Master Chiller SLVA item.
	ENTER	2		Accepts the change.
	ESCAPE	CCNA		
	↓	CCNB	CCN Bus Number	Confirm the bus number of the chiller. The master and slave chiller must be on the same bus.
	ENTER	0		Factory default bus number is 0.
	ESCAPE	CCNB		
	ESCAPE	**OPTN**		
	↓	**RSET**	Reset Cool and Heat Tmp	
	ENTER	CRST	Cooling Reset Type	
	↓ x 5	MSSL	Master/Slave Select	
	ENTER	0	Disable	
	ENTER	0	Disable	Flashing to indicate Edit mode. May require Password
	↑	2	Slave	Use up arrows to change value to 2.
	ENTER	2		Accepts the change.
	ESCAPE	MSSL		
	↓	SLVA	Slave Address	Not required.
	↓	LLBL	Lead/Lag Balance Select	Not required.
	↓	LLBD	Lead/Lag Balance Delta	Not required.
	↓	LLDY	Lead/Lag Start Delay	Not required.
	↓	LAGP	Lag Unit Pump Select	Must be configured to the same value as the master chiller.
	↓	LPUL	Lead Pulldown Time	Not required.
	ESCAPE			
	ESCAPE			At mode level
OPERATING MODES	ENTER	**SLCT**		
	ENTER	**OPER**	Operating Control Type	
	ENTER	0	Switch Control	
	ENTER	0		Flashing to indicate Edit Mode.
	↑	2	CCN Control	Use up arrows to change value to 2. NOTE: Slave chiller must be configured for CCN.
	ENTER	2		Accepts the value.
	ESCAPE	**OPER**		
	ESCAPE			At mode level

NOTE: **Bold** values indicate sub-mode level.

The Lag Unit Pump Select configuration must be set consistently. If pump control is NOT being used, set ***Configuration→RSET→LAGP*** to **1**. If pump control IS being used, set ***Configuration→RSET→LAGP*** to **0**, which is the default value. This must be set in both the master and slave chillers, and it must be consistent in both.

Capacity Control — The control system cycles compressors and minimum load valve solenoids (if equipped) to maintain the user-configured leaving chilled fluid temperature set point. Entering fluid temperature is used by the main base board (MBB) to determine the temperature drop across the cooler and is used in determining the optimum time to add or subtract capacity stages. Entering fluid temperature, space temperature (requires additional sensor), or outdoor-air temperature reset features can automatically reset the leaving chilled fluid temperature set point. It can also be reset from an external 4 to 20-mA signal (requires energy management module).

The control has an automatic lead-lag feature built in for circuit and compressor starts. If enabled, the control will determine which circuit (***Configuration→OPTN→LLCS*=0**) and compressor to start to even the wear. The compressor wear factor (combination of starts and run hours) is used to determine which compressor starts.

Compressor Wear Factor = (Compressor Starts) + 0.1 *(Compressor Run Hours)*

In this case, the circuit with the lowest average compressor wear factor (the average of the wear factors of all available compressors in the circuit) is the circuit that starts first. The compressor within the circuit with the lowest wear factor is the first to start. If the automatic lead-lag function for the circuit is not enabled [***Configuration→OPTN→LLCS*=1** (Circuit A leads), **2** (Circuit B leads), or **3** (Circuit C leads)], then the selected circuit will be the first to start. Again, the compressor with the lowest wear factor within the circuit will be the first to start. If Minimum Load Control is enabled (***Configuration→UNIT→HGBP*=1**), the valve will be operational only during the first stage of cooling.

Once the lead compressor has been started, the lag compressors will be determined by the wear factor and loading sequence selected. If equal loading is selected, (***Configuration→OPTN→LOAD*=0**), the circuit with the lowest average wear factor for the available compressors will start next, with the compressor with the lowest wear factor starting. The control will attempt to keep all circuits at approximately the same number of compressors ON. For this option to function properly, all circuits must have the same number of compressors available. If a circuit compressor is not available due to an alarm condition or demand limit, the capacity staging will change to staged. If staged loading is selected, (***Configuration→OPTN→LOAD*=1**), the started circuit will continue to turn on compressors according to the lowest wear factor until all are on, then start the next circuit with the lowest average wear factor. If Minimum Load Control is enabled for close control (***Configuration→UNIT→HGBP*=2**), the valve will be available at all stages for better temperature control. If Minimum Load Control is enabled for high ambient control (***Configuration→UNIT→HGBP*=3**), the valve will be used only when a high pressure override is active for that circuit.

The electronic expansion valves provide a controlled start-up. During start-up, the low pressure logic in the lead circuit will be ignored for 5 minutes to allow for the transient changes during start-up. As additional stages of compression are required, the processor control will add them. The following example is based on a 30RB225 machine, which has three 25-ton compressors in each circuit. See Table 15.

Each example below has different configurations and is intended to illustrate the loading sequences possible for normal operation.

In Example 1 (Table 16), assume the following configurations are in place:

***Configuration→UNIT→HGBP*=1** . . Minimum Load Control installed and enabled for Start-Up Only

***Configuration→OPTN→LOAD*=0**. . . .Equal Circuit Loading

***Configuration→OPTN→LLCS*=0** . .Automatic Circuit Select

Since Circuit A has the lowest average wear factor, it will be the lead circuit. Within the circuit, compressor A3 has the lowest wear factor and will start first with Minimum Load Control ON. The next stage will turn OFF the minimum load control. Stage 3 will start another circuit because of the Equal Circuit Loading configuration. The next circuit with the lowest wear factor is Circuit B, and the compressor with the lowest wear factor is B2. The next stage will be a circuit C compressor. The process continues until all compressors are ON. See Table 16.

In Example 2 (Table 17), assume the compressor starts and run hours are the same as in the previous example and the following configurations are in place:

***Configuration→UNIT→HGBP*=1** . . Minimum Load Control installed and enabled for Start-Up Only

***Configuration→OPTN→LOAD*=1**. . . Staged Circuit Loading

***Configuration→OPTN→LLCS*=0** . .Automatic Circuit Select

Since Circuit A has the lowest average wear factor, it will be the lead circuit. Within the circuit, compressor A3 has the lowest wear factor and will start first with Minimum Load Control ON. The next stage will turn OFF the minimum load control. Stage 3 will start a compressor in the same circuit because of the Staged Circuit Loading configuration. Compressor A2 has the next lowest wear factor and will be started next. Compressor A3 will be next to start. Since all compressors in Circuit A are ON, the next stage will start another circuit. Of the remaining circuits, Circuit B has the lowest wear factor, and the compressor with the lowest wear factor is B2. All of the Circuit B compressors will be started in the same manner as Circuit A. Once all Circuit B compressors are ON, then Circuit C will be started. The process continues until all compressors are ON. See Table 17.

Table 15 — Compressor Starts and Run Hours

COMPRESSOR	STARTS	RUN HOURS	WEAR FACTOR	CIRCUIT AVERAGE WEAR FACTOR
A1	25	249	49.9	44.8
A2	22	237	45.7	
A3	26	128	38.8	
B1	41	453	86.3	67.6
B2	38	138	51.8	
B3	35	297	64.7	
C1	93	103	103.3	80.3
C2	57	98	66.8	
C3	61	99	70.9	

Table 16 — Compressor Stages and Circuit Cycling, Example 1

STAGE	TOTAL CAP.	CIRCUIT A					CIRCUIT B					CIRCUIT C				
		Cir. Cap.	MLC	A1	A2	A3	Cir. Cap.	MLC	B1	B2	B3	Cir. Cap.	MLC	C1	C2	C3
0	0	0					0					0				
1	8	24	X			X	0					0				
2	11	33				X	0					0				
3	22	33				X	33			X		0				
4	33	33				X	33			X		33			X	
5	44	66			X	X	33			X		33			X	
6	55	66			X	X	66			X	X	33			X	
7	66	66			X	X	66			X	X	66			X	X
8	77	100		X	X	X	66			X	X	66			X	X
9	88	100		X	X	X	100		X	X	X	66			X	X
10	100	100		X	X	X	100		X	X	X	100		X	X	X

LEGEND

MLC — Minimum Load Control

NOTES:
1. Total Cap. (Total Unit Capacity) and Cir. Cap. (Circuit Capacity) are approximate percentage values.
2. Example is to determine minimum load control, staged circuit loading, and automatic circuit select.

Table 17 — Compressor Stage and Circuit Cycling, Example 2

STAGE	TOTAL CAP.	CIRCUIT A					CIRCUIT B					CIRCUIT C				
		Cir. Cap.	MLC	A1	A2	A3	Cir. Cap.	MLC	B1	B2	B3	Cir. Cap.	MLC	C1	C2	C3
0	0	0					0					0				
1	8	24	X			X	0					0				
2	11	33				X	0					0				
3	22	66			X	X	0					0				
4	33	100		X	X	X	0					0				
5	44	100		X	X	X	33			X		0				
6	55	100		X	X	X	66			X	X	0				
7	66	100		X	X	X	100		X	X	X	0				
8	77	100		X	X	X	100		X	X	X	33				X
9	88	100		X	X	X	100		X	X	X	66			X	X
10	100	100		X	X	X	100		X	X	X	100		X	X	X

LEGEND

MLC — Minimum Load Control

NOTES:
1. Total Cap. (Total Unit Capacity) and Cir. Cap. (Circuit Capacity) are approximate percentage values.
2. Example is to determine minimum load control, staged circuit loading, and automatic circuit select.

In Example 3 (Table 18), assume the following configurations are in place:

***Configuration→UNIT→HGBP*=1** . . Minimum Load Control installed and enabled for Start-Up Only

***Configuration→OPTN→LOAD*=0** . . . Equal Circuit Loading

***Configuration→OPTN→LLCS*=2** . . . . . Circuit B Leads

Since Circuit B has been selected, it will be the lead circuit. Within the circuit, compressor B2 has the lowest wear factor and will start first with Minimum Load Control ON. The next stage will turn OFF the minimum load control. Stage 3 will start another circuit because of the Equal Circuit Loading configuration. Comparing Circuit A and C, the circuit with the lowest average wear factor is Circuit A, and the compressor with the lowest wear factor is A3. The next stage will be a circuit C compressor. The process continues until all compressors are ON. See Table 18.

In Example 4 (Table 19), assume the compressor starts and run hours are the same as in the first example and the following configurations are in place:

***Configuration→UNIT→HGBP*=1** . . Minimum Load Control installed and enabled for Start-Up Only

***Configuration→OPTN→LOAD*=1** . . Staged Circuit Loading

***Configuration→OPTN→LLCS*=3** . . . . . Circuit C Leads

Since Circuit C has been selected, it will be the lead circuit. Within the circuit, compressor C2 has the lowest wear factor and will start first with Minimum Load Control ON. The next stage will turn OFF the minimum load control. Stage 3 will start a compressor in the same circuit because of the Staged Circuit Loading configuration. Compressor C3 has the next lowest wear factor and will be started next. Compressor C1 will be next to start. Since all compressors in Circuit C are ON, the next stage will start another circuit. Of the remaining circuits, Circuit A has the lowest wear factor, and the compressor with the lowest wear factor is A3. All of the Circuit A compressors will be started in the same manner as Circuit C. Once all Circuit A compressors are ON, then Circuit B will be started. The process continues until all compressors are ON. See Table 19.

If the circuit capacity is to be reduced, the compressor with the highest wear factor will be shut off first (in most cases). With Equal Circuit Loading, stages will be removed from each circuit, following the same criteria used in the loading sequence, but in the opposite order. Shown in Table 19 based on the current wear factor in the opposite to the loading sequence shown above, the compressor with the highest wear factor will be removed first. When Staged Circuit Loading is selected, the capacity from the last lag circuit will be removed first.

Table 18 — Compressor Stage and Circuit Cycling, Example 3

STAGE	TOTAL CAP.	CIRCUIT A					CIRCUIT B					CIRCUIT C				
		Cir. Cap.	MLC	A1	A2	A3	Cir. Cap.	MLC	B1	B2	B3	Cir. Cap.	MLC	C1	C2	C3
0	0	0					0					0				
1	8	0	X				24	X		X		0				
2	11	0					33			X		0				
3	22	33				X	33			X		0				
4	33	33				X	33			X		33			X	
5	44	33				X	66			X	X	33			X	
6	55	66			X	X	66			X	X	33			X	
7	66	66			X	X	66			X	X	66			X	X
8	77	66			X	X	100		X	X	X	66			X	X
9	88	100		X	X	X	100		X	X	X	66			X	X
10	100	100		X	X	X	100		X	X	X	100		X	X	X

LEGEND
MLC — Minimum Load Control

NOTES:
1. Total Cap. (Total Unit Capacity) and Cir. Cap. (Circuit Capacity) are approximate percentage values.
2. Example is to determine minimum load control, staged circuit loading, and automatic circuit select.

Table 19 — Compressor Stage and Circuit Cycling, Example 4

STAGE	TOTAL CAP.	CIRCUIT A					CIRCUIT B					CIRCUIT C				
		Cir. Cap.	MLC	A1	A2	A3	Cir. Cap.	MLC	B1	B2	B3	Cir. Cap.	MLC	C1	C2	C3
0	0	0					0					0				
1	8	0					0					24	X			X
2	11	0					0					33				X
3	22	0					0					66			X	X
4	33	0					0					100		X	X	X
5	44	33				X	0					100		X	X	X
6	55	66			X	X	0					100		X	X	X
7	66	100		X	X	X	0					100		X	X	X
8	77	100		X	X	X	33			X		100		X	X	X
9	88	100		X	X	X	66			X	X	100		X	X	X
10	100	100		X	X	X	100		X	X	X	100		X	X	X

LEGEND
MLC — Minimum Load Control

NOTES:
1. Total Cap. (Total Unit Capacity) and Cir. Cap. (Circuit Capacity) are approximate percentage values.
2. Example is to determine minimum load control, staged circuit loading, and automatic circuit select.

The capacity control algorithm runs every 30 seconds. The algorithm attempts to maintain the Control Point at the desired set point. Each time it runs, the control reads the entering and leaving fluid temperatures. The control determines the rate at which conditions are changing and calculates 2 variables based on these conditions. Next, a capacity ratio (SM2) is calculated using the 2 variables to determine whether or not to make any changes to the current stages of capacity. This ratio value ranges from –100 to +100%. If the next stage of capacity is a compressor, the control starts (stops) a compressor when the ratio reaches +100% (–100%). If the next stage of capacity is the Minimum Load Control, the control energizes (deenergizes) the Minimum Load Control when the ratio reaches +60% (–60%). If installed, the minimum load valve solenoid will be energized with the first stage of capacity. The control will also use the minimum load valve solenoid as the last stage of capacity before turning off the last compressor. If the close control feature (***Configuration→UNIT→HGBP*=2**) is enabled the control will use the minimum load valve solenoid whenever possible to fine tune leaving fluid temperature control. A delay of 90 seconds occurs after each capacity step change with Minimum Load Control. A delay of 3 minutes occurs after each compressor capacity step change.

BRINE CHILLER OPERATION — For chiller sizes 120 to 390 with the factory-installed brine option, discharge and liquid line solenoids are added to all circuits (Circuit B only for size 120). The control system must be correctly configured for proper operation. The minimum load valve option must be enabled (***Configuration→UNIT→HGBP*=1**) and the fluid type must be set to medium temperature brine (***Configuration →SERV→FLUD*=2**). The Minimum Load Valve output is used to control the discharge and liquid line solenoid valves. As a result, Minimum Load Control (Hot Gas Bypass) cannot be utilized on brine duty chillers. The discharge and liquid line solenoid valves are wired in parallel so they will both open and close at the same time. The main function of the solenoid valves is to isolate a portion of the condenser section when only a single compressor is running to allow for proper oil return to the compressors. A chart showing solenoid operation is shown below:

CIRCUIT CAPACITY	DISCHARGE/LIQUID SOLENOID VALVE OPERATION
All compressors off	Solenoids energized
One compressor starting	Solenoids deenergized after 30-second delay
Two or more compressors running	Solenoids energized
Reduction from two to one compressor running	Solenoids deenergized with no delay

NOTE: Minimum load valve (HGBP) cannot be utilized if fluid type is set to medium temperature brine (***Configuration →SERV→FLUD*=2**).

CAPACITY CONTROL OVERRIDES — The following capacity control overrides (***Run Status→VIEW→CAP.S***) will modify the normal operation routine. If any of the following override conditions listed below is satisfied, it will determine the capacity change instead of the normal control.

Override #1: Cooler Freeze Protection — This override attempts to avoid the freeze protection alarm. If the Leaving Water Temperature is less than Brine Freeze Set Point (***Configuration→SERV→LOSP***) + 2.0° F (1.1º C) then remove a stage of capacity.

NOTE: The freeze set point is 34 F (1.1 C) for fresh water systems (***Configuration→SERV→FLUD*=1**). The freeze set point is Brine Freeze Set Point (***Configuration→SERV →LOSP***), for Medium Temperature Brine systems (***Configuration→SERV→FLUD*=2**).

Override #2: Circuit A Low Saturated Suction Temperature in Cooling
Override #3: Circuit B Low Saturated Suction Temperature in Cooling
Override #4: Circuit C Low Saturated Suction Temperature in Cooling — These overrides attempt to avoid the low suction temperature alarms. This override is active only when more than one compressor in a circuit is ON. If the Saturated Suction Temperature is less than Brine Freeze Set Point (***Configuration→SERV→LOSP***) –18.0 F (–10 C) for 90 seconds, or the Saturated Suction Temperature is less than –4 F (–20 C), a compressor in the affected circuit will be turned off.

Override #5: Low Temperature Cooling — This override removes one stage of capacity when the difference between the Control Point (***Run Status→VIEW→CTPT***) and the Leaving Water Temperature (***Run Status→VIEW→LWT***) reaches a predetermined limit and the rate of change of the water is 0 or still decreasing.

Override #6: Low Temperature Cooling — This override removes two stages of capacity when the Entering Water Temperature (***Run Status→VIEW→EWT***) is less than the Control Point (***Run Status→VIEW→CTPT***.)

Override #7: Ramp Loading — If the unit is configured for ramp loading (***Configuration→OPTN→RL.S*=ENBL**) and if the difference between the Leaving Water Temperature and the Control Point is greater than 4º F (2.2º C) and the rate of change of the leaving water is greater than Cool Ramp Loading Rate (***Setpoints→COOL→CRMP***) then no capacity stage increase will be made. Operating mode 5 (MD05) will be in effect.

Override #8: Service Manual Test Override — The manual test consists in adding a stage of capacity every 30 seconds, until the control enables all of the requested compressors and Minimum Load Control selected in the *Comfort*Link™ display Service Test menu. All safeties and higher priority overrides are monitored and acted upon.

Override # 9: Demand Limit — This override mode is active when a command to limit the capacity is received. If the current unit capacity is greater than the active capacity limit value, a stage is removed. If the current capacity is lower than the capacity limit value, the control will not add a stage that will result in the new capacity being greater then the capacity limit value. Operating mode 4 (MD04) will be in effect.

Override #10: Cooler Interlock Override — This override prohibits compressor operation until the Cooler Interlock (***Inputs→GEN.I→LOCK***) is closed.

Override #11: High Temperature Cooling — This override algorithm runs once when the unit is switched to ON. If the difference between the Leaving Water Temperature (***Run Status →VIEW→LWT***) and the Control Point (***Run Status →VIEW→CTPT***) exceeds a calculated value and the rate of change of the water temperature is greater than –0.1º F/min, a stage will be added.

Override #12: High Temperature Cooling — This override runs only when Minimum Load Control is Enabled (***Configuration→UNIT→HGBP* = 1**, **2** or **3**). This override will add a stage of capacity if the next stage is Minimum Load Control, when the difference between the Leaving Water Temperature (***Run Status→VIEW→LWT***) and the Control Point (***Run Status→VIEW→CTPT***) exceeds a calculated value and the rate of change of the water temperature is greater than a fixed value.

Override #13: Minimum On/Off and Off/On Time Delay — Whenever a capacity step change has been made, either with Minimum Load Control or a compressor, the control will remain at this capacity stage for the next 90 seconds. During this time, no capacity control algorithm calculations will be made. If the capacity step is a compressor, an additional 90-second delay is added to the previous hold time (see Override #22). This override allows the system to stabilize before another capacity stage is added or removed. If a condition of a higher priority override occurs, the higher priority override will take precedence.

Override #14: Slow Change Override — This override prevents compressor stage changes when the leaving temperature is close to the control point and slowly moving towards the control point.

Override #15: System Manager Capacity Control — If a Chillervisor module is controlling the unit and the Chillervisor module is controlling multiple chillers, the unit will add a stage to attempt to load to the demand limited value.

Override #16: Circuit A High Pressure Override
Override #17: Circuit B High Pressure Override
Override #18: Circuit C High Pressure Override — This override attempts to avoid a high pressure failure. The algorithm is run every 4 seconds. At least one compressor must be on in the circuit. If the Saturated Condensing Temperature for the circuit is above the High Pressure Threshold (***Configuration→ SERV→HP.TH***) then a compressor for that circuit will be removed. If Minimum Load Control was enabled for High Ambient (***Configuration→UNIT→HGBP*=3**), then the Minimum Control Valve will be energized.

Override #19: Standby Mode — This override algorithm will not allow a compressor to run if the unit is in Standby mode, (***Run Status→VIEW→HC.ST*=2**).

Override #22: Minimum On Time Delay — In addition to Override #13 Minimum On/Off and Off/On Time Delay, for compressor capacity changes, an *additional* 90-second delay will be added to Override #13 delay. No compressor will be deenergized until 3 minutes have elapsed since the last compressor has been turned ON. When this override is active, the capacity control algorithm calculations will be performed, but no capacity reduction will be made until the timer has expired. A control with higher precedence will override the Minimum On Time Delay.

Override #23: Circuit A Low Saturated Suction Temperature in Cooling
Override #24: Circuit B Low Saturated Suction Temperature in Cooling
Override #25: Circuit C Low Saturated Suction Temperature in Cooling — If the circuit is operating in an area close to the operational limit of the compressor, the circuit capacity will remain at the same point or unload to raise the saturated suction temperature. This algorithm will be active if at least one compressor in the circuit is on and one of the following conditions is true:

1. Saturated Suction Temperature is less than Brine Freeze (***Configuration→SERV→LOSP***) – 6º F (3.3º C).
2. Saturated Suction Temperature is less than Brine Freeze (***Configuration→SERV→LOSP***) and the circuit approach (Leaving Water Temperature – Saturated Suction Temperature) is greater than 15º F (8.3º C) and the Circuit

Superheat (Return Gas Temperature – Saturated Suction Temperature) is greater than 15º F (8.3º C).

NOTE: The freeze set point is 34 F (1.1 C) for fresh water systems (***Configuration→SERV→FLUD*=1**). The freeze set point is Brine Freeze Set Point (***Configuration →SERV→LOSP***), for Medium Temperature Brine systems (***Configuration→SERV→FLUD*=2**).

If any of these conditions are met, the appropriate operating mode, 21 (Circuit A), 22 (Circuit B) or 23 (Circuit C) will be in effect.

Override #26: Circuit A Operation Outside Compressor Operating Envelope
Override #27: Circuit B Operation Outside Compressor operating envelope
Override #28: Circuit C Operation Outside Compressor Operating Envelope — This override prevents compressor operation outside of its operating envelope.

1. If the mean saturated discharge temperature (SDT) is greater than 7° F over the limit, the circuit is unloaded immediately.
2. If the mean SDT is over the limit (but not greater than 7° F over the limit) for 90 seconds, then the circuit is unloaded.
3. If the mean SDT is more than the limit minus 2° F, the circuit is prevented from loading. This override shall remain active until the mean pressure goes below the limit minus 3° F.

Override #34: Circuit A Low Refrigerant Charge
Override #35: Circuit B Low Refrigerant Charge
Override #36: Circuit C Low Refrigerant Charge — The capacity override attempts to protect the compressor from starting with no refrigerant in the circuit. This algorithm runs only when the circuit is not operational, (no compressors ON). There are several criteria that will enable this override:

1. The Saturated Suction Temperature or Saturated Discharge Temperature is less than –13 F (–10.6 C).
2. All of these conditions must be true:
   a. The Saturated Suction Temperature or Saturated Discharge Temperature is less than Leaving Water Temperature by more than 5.4º F (3.0º C).
   b. Saturated Suction Temperature or Saturated Discharge Temperature is less than 41 F (5 C).
   c. Outdoor Air Temperature is less than 32 F (0º C).
   d. Saturated Suction Temperature or Saturated Discharge Temperature is less than the Outdoor Air Temperature by more than 5.4º F (3.0º C).
3. All of these conditions must be true:
   a. The Saturated Suction Temperature or Saturated Discharge Temperature is less than Leaving Water Temperature by more than 5.4º F (3.0º C).
   b. Saturated Suction Temperature or Saturated Discharge Temperature is less than 41 F (5 C).
   c. Saturated Suction Temperature or Saturated Discharge Temperature is less than the Brine Freeze Point (***Configuration→SERV→LOSP***) by more than 6º F (3.3º C).

   NOTE: The freeze set point is 34 F (1.1 C) for fresh water systems (***Configuration→ SERV→FLUD*=1**). The freeze set point is Brine Freeze Set Point (***Configuration→SERV→ LOSP***), for Medium Temperature Brine systems (***Configuration→SERV→FLUD*=2**).
4. All of these conditions must be true:
   a. The Saturated Suction Temperature or Saturated Discharge Temperature is less than Leaving Water Temperature by more than 5.4º F (3.0º C).
   b. Saturated Suction Temperature or Saturated Discharge Temperature is less than 41 F (5 C).
   c. Saturated Suction Temperature or Saturated Discharge Temperature is less than the Outdoor Air Temperature by more than 9º F (5º C).

If any of these conditions 1, 2, 3 or 4 are met, the appropriate operating mode, 21 (Circuit A), 22 (Circuit B) or 23 (Circuit C) will be in effect.

Override #37: Circuit A Low Superheat
Override #38: Circuit B Low Superheat
Override #39: Circuit C Low Superheat — This override attempts to avoid liquid slugging for the running compressors. It also protects against operation with excessively high superheat. No capacity steps will be added to the affected circuit until there is a superheat greater than 5º F (2.8º C) and less than 45º F (25º C). If the capacity of the machine must be increased, the control will look to another circuit for additional capacity.

Head Pressure Control — The main base board (MBB) controls the condenser fans to maintain the lowest condensing temperature possible, and thus the highest unit efficiency. The MBB uses the saturated condensing temperature input from the discharge pressure transducer to control the fans. Head pressure control is maintained through a calculated set point which is automatically adjusted based on actual saturated condensing and saturated suction temperatures so that the compressor(s) is (are) always operating within the manufacturer's specified envelope (see Fig. 11). Each time a fan is added the calculated head pressure set point will be raised 25° F (13.9° C) for 35 seconds to allow the system to stabilize. The control will automatically reduce the unit capacity as the saturated condensing temperature approaches an upper limit. See capacity overrides 16-18. The control will indicate through an operating mode that high ambient unloading is in effect. If the saturated condensing temperature in a circuit exceeds the calculated maximum, the circuit will be stopped. For these reasons, there are no head pressure control methods or set points to enter. The control will turn off a fan stage when the condensing temperature is below the minimum head pressure requirement for the compressor. Fan sequences are shown in Fig. 12.

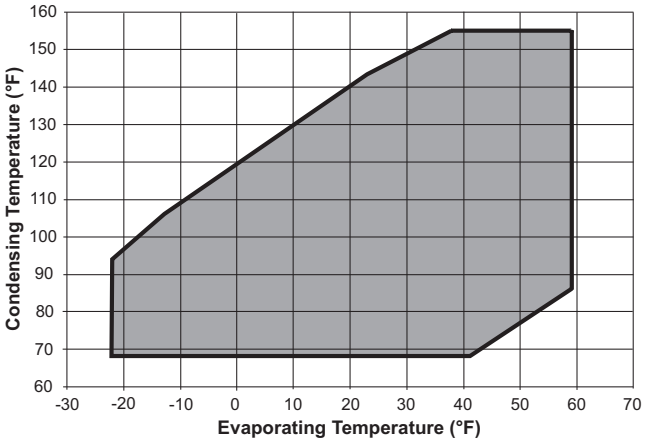

Fig. 11 — Compressor Operating Envelope

LOW AMBIENT TEMPERATURE HEAD PRESSURE CONTROL OPTION — For low-ambient operation, the lead fan on a circuit can be equipped with low ambient temperature head pressure control option or accessory. The controller adjusts fan speed to maintain the calculated head pressure set point.

	MODEL	CIRCUIT	LOCATION	FAN STAGE					
				1	2	3	4	5	6
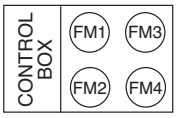 30RB060,070,080	060,070	A	Fan Number	FM1	FM2	FM3	—	—	—
			Fan Board/Channel	FB1/CH1	FB1/CH2	FB1/CH3	—	—	—
		B	Fan Number	FM4	—	—	—	—	—
			Fan Board/Channel	FB1/CH5	—	—	—	—	—
	080	A	Fan Number	FM1	FM2	—	—	—	—
			Fan Board/Channel	FB1/CH1	FB1/CH2	—	—	—	—
		B	Fan Number	FM3	FM4	—	—	—	—
			Fan Board/Channel	FB1/CH5	FB1/CH6	—	—	—	—
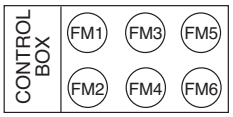 30RB090,100,110	090,100, 110	A	Fan Number	FM1	FM2	FM3	—	—	—
			Fan Board/Channel	FB1/CH1	FB1/CH2	FB1/CH3	—	—	—
		B	Fan Number	FM5	FM6	FM4	—	—	—
			Fan Board/Channel	FB1/CH5	FB1/CH6	FB1/CH7	—	—	—
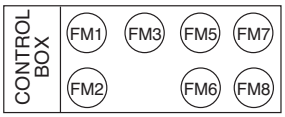 30RB120	120	A	Fan Number	FM3	FM1	FM2	—	—	—
			Fan Board/Channel	FB1/CH1	FB1/CH2	FB1/CH3	—	—	—
		B	Fan Number	FM7	FM5	FM6	FM8	—	—
			Fan Board/Channel	FB1/CH5	FB1/CH6	FB1/CH7	FB1/CH8	—	—
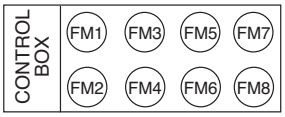 30RB130,150	130,150	A	Fan Number	FM3	FM1	FM2	FM4	—	—
			Fan Board/Channel	FB1/CH1	FB1/CH2	FB1/CH3	FB1/CH4	—	—
		B	Fan Number	FM7	FM5	FM6	FM8	—	—
			Fan Board/Channel	FB1/CH5	FB1/CH6	FB1/CH7	FB1/CH8	—	—
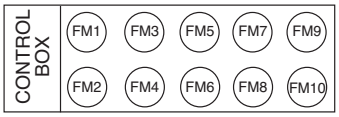 30RB160,170	160,170	A	Fan Number	FM5	FM3	FM1	FM2	FM4	FM6
			Fan Board/Channel	FB1/CH1	FB1/CH2	FB1/CH3	FB1/CH4	FB1/CH5	FB1/CH6
		B	Fan Number	FM9	FM7	FM8	FM10	—	—
			Fan Board/Channel	FB2/CH1	FB2/CH2	FB2/CH3	FB2/CH4	—	—
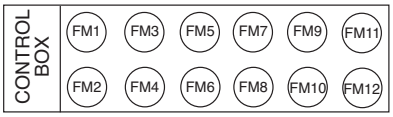 30RB190,210,225	190	A	Fan Number	FM5	FM3	FM1	FM2	FM4	FM6
			Fan Board/Channel	FB1/CH1	FB1/CH2	FB1/CH3	FB1/CH4	FB1/CH5	FB1/CH6
		B	Fan Number	FM11	FM9	FM7	FM8	FM10	FM12
			Fan Board/Channel	FB2/CH1	FB2/CH2	FB2/CH3	FB2/CH4	FB2/CH5	FB2/CH6
	210,225	A	Fan Number	FM3	FM1	FM2	FM4	—	—
			Fan Board/Channel	FB1/CH1	FB1/CH2	FB1/CH3	FB1/CH4	—	—
		B	Fan Number	FM7	FM5	FM6	FM8	—	—
			Fan Board/Channel	FB1/CH5	FB1/CH6	FB1/CH7	FB1/CH8	—	—
		C	Fan Number	FM11	FM9	FM10	FM12	—	—
			Fan Board/Channel	FB3/CH1	FB3/CH2	FB3/CH3	FB3/CH4	—	—
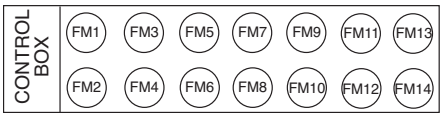 30RB250	250	A	Fan Number	FM3	FM1	FM2	FM4	—	—
			Fan Board/Channel	FB1/CH1	FB1/CH2	FB1/CH3	FB1/CH4	—	—
		B	Fan Number	FM7	FM5	FM6	FM8	—	—
			Fan Board/Channel	FB1/CH5	FB1/CH6	FB1/CH7	FB1/CH8	—	—
		C	Fan Number	FM13	FM11	FM9	FM10	FM12	FM14
			Fan Board/Channel	FB3/CH1	FB3/CH2	FB3/CH3	FB3/CH4	FB3/CH5	FB3/CH6
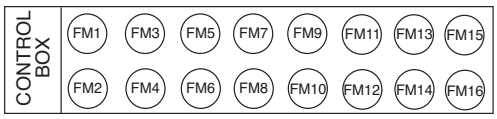 30RB275	275	A	Fan Number	FM5	FM3	FM1	FM2	FM4	FM6
			Fan Board/Channel	FB1/CH1	FB1/CH2	FB1/CH3	FB1/CH4	FB1/CH5	FB1/CH6
		B	Fan Number	FM11	FM9	FM7	FM8	FM10	FM12
			Fan Board/Channel	FB2/CH1	FB2/CH2	FB2/CH3	FB2/CH4	FB2/CH5	FB2/CH6
		C	Fan Number	FM15	FM13	FM14	FM16	—	—
			Fan Board/Channel	FB3/CH1	FB3/CH2	FB3/CH3	FB3/CH4	—	—
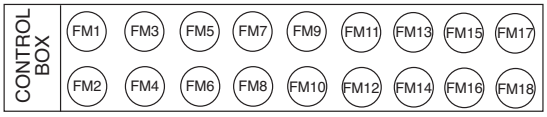 30RB300	300	A	Fan Number	FM5	FM3	FM1	FM2	FM4	FM6
			Fan Board/Channel	FB1/CH1	FB1/CH2	FB1/CH3	FB1/CH4	FB1/CH5	FB1/CH6
		B	Fan Number	FM11	FM9	FM7	FM8	FM10	FM12
			Fan Board/Channel	FB2/CH1	FB2/CH2	FB2/CH3	FB2/CH4	FB2/CH5	FB2/CH6
		C	Fan Number	FM17	FM15	FM13	FM14	FM16	FM18
			Fan Board/Channel	FB3/CH1	FB3/CH2	FB3/CH3	FB3/CH4	FB3/CH5	FB3/CH6

Fig. 12 — Condenser Fan Staging

LOW AMBIENT TEMPERATURE HEAD PRESSURE CONTROL OPERATING INSTRUCTIONS — The 30RB low ambient control is a variable speed drive (VFD) that varies the speed of the lead condenser fan in each circuit to maintain the calculated head pressure control set point. The fan speed varies in proportion to the 0 to 10 vdc analog signal produced by the AUX1 fan board. The display indicates motor speed in Hz by default. There are two different VFDs used for these units, a Siemens Micromaster 420/440 and a Schneider Altivar 21. The Schneider Altivar VFD performs the same functions as Siemens drive. However, there are different control wiring connections and parameter programming.

Siemens VFD Operation — The low ambient temperature head pressure controller is pre-configured to operate from a 0 to 10 vdc analog input signal present on terminals 3 (AIN+) and 4 (AIN–). Jumpers between terminals 2 and 4 and terminals 5 and 8 are required for proper operation. The drive is enabled based on an increase in the analog input signal above 0 vdc. Output is varied from 0 Hz to 60 Hz as the analog signal increases from 0 vdc to 10 vdc. When the signal is at 0 vdc the drive holds the fan at 0 rpm. The head pressure control set point is not adjustable. The MBB determines the control set point as required.

Siemens VFD Replacement — If the controller is replaced the parameters in Table 20 must be configured. See Fig. 13 and 14.

Table 20 — Siemens VFD Head Pressure Control Parameters

PARAMETER*	VALUE	DESCRIPTION
P0010	1	Enter Quick Commissioning
P0311	1140	Rated Motor Speed
P3900	1	End of Quick Commissioning
P0003	3	User Access Level
P0757	0.50	Control Signal Scaling Offset
P0761	0.50	Control Signal Scaling Offset
P1210	6	Automatic Restart Setting
P1310	10	Continuous Boost Parameter

*Remove jumper from terminals 5 and 8 (or terminals 5 and 9 for 575-v units) before configuring parameter. Reinstall jumper after configuration is complete.

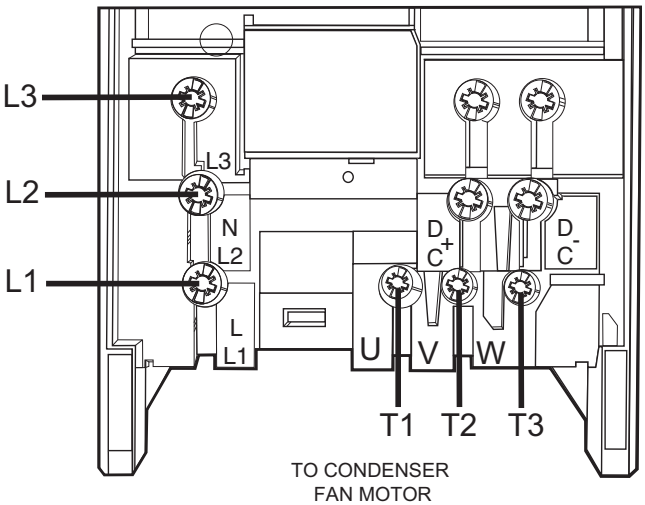

Fig. 13 — Low Ambient Temperature Control Power Wiring

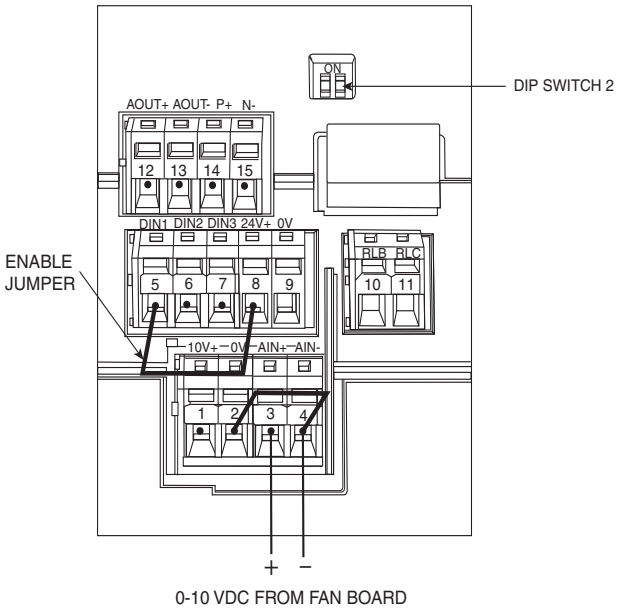

NOTE: For 575-v units, jumper terminals are 5 and 9.

Fig. 14 — Low Ambient Temperature Control Signal Wiring

DIP switch settings:

DIP switch 1 is not used.

DIP switch 2 is the motor frequency. (OFF = 50 Hz, ON = 60 Hz)

Siemens VFD Programming — Parameter values can be altered via the operator panel. The operator panel features a five-digit, seven-segment display for displaying parameter numbers and values, alarm and fault messages, set points, and actual values. See Fig. 15. See Table 21 for additional information on the operator panel.

NOTE: The operator panel motor control functions are disabled by default. To control the motor via the operator panel, parameter P0700 should be set to 1 and P1000 set to 1. The operator panel can be fitted to and removed from the drive while power is applied. If the operator panel has been set as the I/O control (P0700 = 1), the drive will stop if the operator panel is removed.

Fig. 15 — Siemens VFD Low Ambient Temperature Controller

Changing Single Digits in Parameter Values with the Siemens VFD Operator Panel — For changing the parameters value rapidly, the single digits of the display can be changed by performing the following actions:

Ensure the operator panel is in the parameter value changing level as described in the Changing Parameters with the Operator Panel section.

1. Press Fn (function button), which causes the farthest right digit to blink.

2. Change the value of this digit by pressing ▲ or ▼ .
3. Pressing Fn (function button) again to cause the next digit to blink.
4. Perform steps 2 to 4 until the required value is displayed.
5. Press P (parameter button) to exit the parameter value changing level.

NOTE: The function button may also be used to acknowledge a fault condition.

Quick Commissioning with the Siemens VFD Operator Panel (P0010=1) — It is **important** that parameter P0010 is used for commissioning and P0003 is used to select the number of parameters to be accessed. The P0010 parameter allows a group of parameters to be selected that will enable quick commissioning. Parameters such as motor settings and ramp settings are included. At the end of the quick commissioning sequences, P3900 should be selected, which, when set to 1, will carry out the necessary motor calculations and clear all other parameters (not included in P0010=1 to the default settings. This will only occur in Quick Commissioning mode. See Fig. 16.

Reset the Siemens VFD to Factory Default — To reset all parameters to the factory default settings; the following parameters should be set as follows:

1. Set P0010=30.
2. Set P0970 =1.

NOTE: The reset process can take up to 3 minutes to complete.

Troubleshooting the Siemens VFD with the Operating Panel — Warnings and faults are displayed on the operating panel with Axxx and Fxxx. The individual messages are shown in Table 22.

If the motor fails to start, check the following:

- Power is present on T1, T2 and T3.
- Configuration jumpers are in place.
- Control signal between 1 vdc and 10 vdc is present on terminals 3 and 4.
- P0010 = 0.
- P0700 = 2.

Siemens VFD Fault Messages (Tables 22 and 23) — In the event of a failure, the drive switches off and a fault code appears on the display.

NOTE: To reset the fault code, one of the following methods can be used:

1. Cycle the power to the drive.
2. Press the Fn button on the operator panel.

Table 21 — Siemens VFD Low Ambient Temperature Controller Operator Panel

PANEL/BUTTON	FUNCTION	DESCRIPTION
r0000	Indicates Status	The LCD displays the settings currently used by the converter.
I	Start Converter	The Start Converter button is disabled by default. To enable this button set P0700 = 1.
0	Stop Converter	Press the Stop Converter button to cause the motor to come to a standstill at the selected ramp down rate. Disabled by default, to enable set P0700 = 1. Press the Stop Converter button twice (or hold) to cause the motor to coast to a standstill. This function is always enabled.
↻	Change Direction	Press the Change Direction button to change the direction of rotation of the motor. Reverse is indicated by a minus (–) sign or a flashing decimal point. Disabled by default, to enable set P0700 = 1.
jog	Jog Motor	Press the Jog Motor button while the inverter has no output to cause the motor to start and run at the preset jog frequency. The motor stops when the button is released. The Jog Motor button is not enabled when the motor is running.
Fn	Functions	The Functions button can be used to view additional information. Press and hold the button to display the following information starting from any parameter during operation: 1. DC link voltage (indicated by d – units V). 2. Output current. (A) 3. Output frequency (Hz) 4. Output voltage (indicated by o – units V). 5. The value selected in P0005 (If P0005 is set to show any of the above [3, 4, or 5] then this will not be shown when toggling through the menu). Press the Functions button repeatedly to toggle through displayed values. **Jump Function** Press of the Fn button from any parameter (rXXXX or PXXXX) to immediately jump to R0000, when another parameter can be changed, if required. Return to R0000 and press the Functions again to return.
P	Access Parameters	Allows access to the parameters.
▲	Increase Value	Press the Increase Value button to increase the displayed value. To change the Frequency Setpoint using the operator panel set P1000 = 1.
▼	Decrease Value	Press the Decrease Value button to decrease the displayed value. To change the Frequency Setpoint using the operating panel set P1000 = 1.

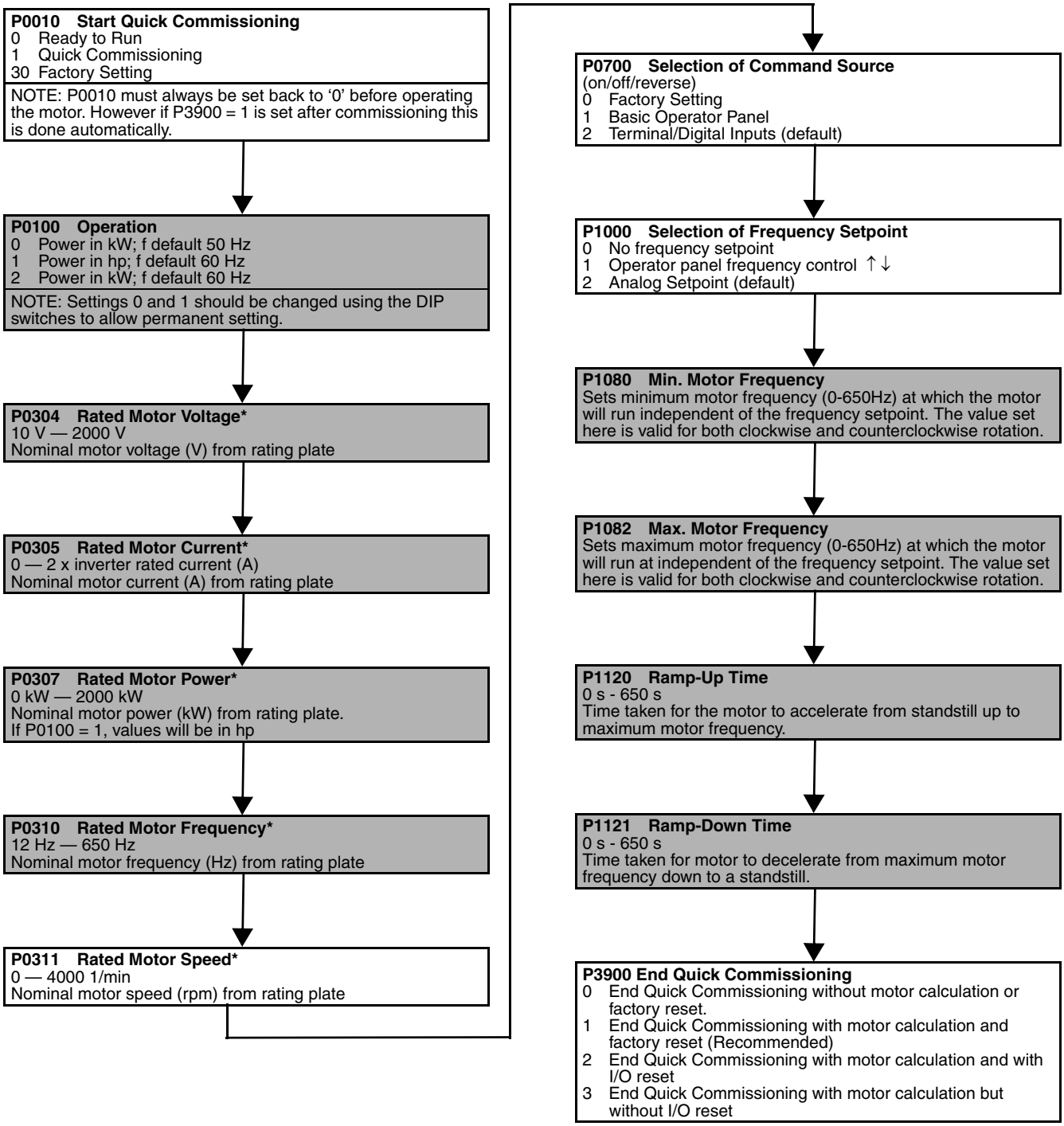

*Motor-specific parameters — see motor rating plate.

NOTE: Shaded boxes are for reference only.

Fig. 16 — Siemens VFD Low Ambient Temperature Controller Flow Chart Quick Commissioning

Table 22 — Siemens VFD Low Ambient Temperature Controller Fault Messages

FAULT	POSSIBLE CAUSES	TROUBLESHOOTING
F0001 Overcurrent	• Motor power does not correspond to the inverter power • Motor lead short circuit • Ground fault	Check the following: 1. Motor power (P0307) must correspond to inverter power (P0206) 2. Motor cable and motor must have no short-circuits or ground faults 3. Motor parameters must match the motor in use 4. Motor must not be obstructed or overloaded After Steps 1-4 have been checked, increase the ramp time (P1120) and reduce the boost level (P1310, P1311, P1312).
F0002 Overvoltage	• DC-link voltage (r0026) exceeds trip level (P2172) • Overvoltage can be caused either by too high main supply voltage or if motor is in regenerative mode • Regenerative mode can be caused by fast ramp downs or if the motor is driven from an active load	Check the following: 1. Supply voltage (P0210) must lie within limits indicated on rating plate 2. DC-link voltage controller must be enabled (P1240) and have parameters set correctly 3. Ramp-down time (P1121) must match inertia of load
F0003 Undervoltage	• Main supply failed • Shock load outside specified limits	Check the following: 1. Supply voltage (P0210) must lie within limits indicated on rating plate 2. Supply must not be susceptible to temporary failures or voltage reductions
F0004 Drive Overtemperature	• Ambient temperature outside of limits • Fan failure	Check the following: 1. Fan must turn when inverter is running 2. Pulse frequency must be set to default value 3. Air inlet and outlet points are not obstructed 4. Ambient temperature could be higher than specified for the drive.
F0005 Drive I^2t	• Drive overloaded • Duty cycle too demanding • Motor power (P0307) exceeds drive power capability (P0206)	Check the following: 1. Load duty cycle must lie within specified limits 2. Motor power (P0307) must match drive power (P0206)
F0011 Motor Overtemperature I^2t	• Motor overloaded • Motor data incorrect • Long time period operating at low speeds	1. Check motor data 2. Check loading on motor 3. Boost settings too high (P1310, P1311, P1312) 4. Check parameter for motor thermal time constant 5. Check parameter for motor I^2t warning level
F0041 Stator Resistance Measurement Failure	Stator resistance measurement failure	1. Check if the motor is connected to the drive 2. Check that the motor data has been entered correctly
F0051 Parameter EEPROM Fault	Reading or writing of the non-volatile parameter storage has failed	1. Factory reset and new parameters set 2. Replace drive
F0052 Powerstack Fault	Reading of the powerstack information has failed or the data is invalid	Replace drive
F0060 Asic Timeout	Internal communications failure	1. Acknowledge fault 2. Replace drive if repeated
F0070 Communications Board Setpoint Error	No setpoint received from communications board during telegram off time	1. Check connections to the communications board 2. Check the master
F0071 No Data for USS (RS232 Link) During Telegram Off Time	No response during telegram off time via USS (BOP link)	1. Check connections to the communications board 2. Check the master
F0072 No Data from USS (RS485 Link) During Telegram Off Time	No response during telegram off time via USS (COM link)	1. Check connections to the communications board 2. Check the master
F0080 Analog Input - Lost Input Signal	• Broken wire • Signal out of limits	Check connection to analog input
F0085 External Fault	External fault is triggered via terminal inputs	Disable terminal input for fault trigger
F0101 Stack Overflow	Software error or processor failure	1. Run self test routines 2. Replace drive
F0221 PI Feedback Below Minimum Value	PID Feedback below minimum value P2268	1. Change value of P2268 2. Adjust feedback gain
F0222 PI Feedback Above Maximum Value	PID Feedback above maximum value P2267	1. Change value of P2267 2. Adjust feedback gain
F0450 (Service Mode Only) BIST Tests Failure	Fault value 1 Some of the power section tests have failed 2 Some of the control board tests have failed 4 Some of the functional tests have failed 8 Some of the IO module tests have failed 16 The Internal RAM has failed its check on power-up	1. Inverter may run but certain actions will not function correctly 2. Replace drive

LEGEND

I^2t — Current Squared Time

Table 23 — Siemens VFD Alarm Messages

FAULT	POSSIBLE CAUSES	TROUBLESHOOTING
A0501 Current Limit	• Motor power does not correspond to the drive power • Motor leads are too short • Ground fault	1. Check whether the motor power corresponds to the drive power 2. Check that the cable length limits have not been exceeded 3. Check motor cable and motor for short-circuits and ground faults 4. Check whether the motor parameters correspond with the motor being used 5. Check the stator resistance 6. Increase the ramp-up-time 7. Reduce the boost 8. Check whether the motor is obstructed or overloaded
A0502 Overvoltage Limit	• Mains supply too high • Load regenerative • Ramp-down time too short	1. Check that mains supply voltage is within allowable range 2. Increase ramp down times NOTE: If the vdc-max controller is active, ramp-down times will be automatically increased
A0503 Undervoltage Limit	• Mains supply too low • Short mains interruption	Check main supply voltage (P0210)
A0504 Drive Overtemperature	Warning level of inverter heat-sink temperature (P0614) is exceeded, resulting in pulse frequency reduction and/or output frequency reduction depending on parameters set (P0610)	1. Check if ambient temperature is within specified limits 2. Check load conditions and duty cycle 3. Check if fan is turning when drive is running
A0505 Drive I^2t	Warning level is exceeded; current will be reduced if parameters set (P0610 = 1)	Check if duty cycle is within specified limits
A0506 Drive Duty Cycle	Heatsink temperature and thermal junction model are outside of allowable range	Check if duty cycle is within specified limits
A0511 Motor Overtemperature I^2t	Motor overloaded	Check the following: 1. P0611 (motor I^2t time constant) should be set to appropriate value 2. P0614 (Motor I^2t overload warning level) should be set to suitable level 3. Are long periods of operation at low speed occurring 4. Check that boost settings are not too high
A0541 Motor Data Identification Active	Motor data identification (P1910) selected or running	Wait until motor identification is finished
A0600 RTOS Overrun Warning	Software error	—

LEGEND

I^2t — Current Squared Time

Schneider Altivar VFD Operation — The low ambient temperature head pressure controller is pre-configured to operate from a 0 to 10 vdc analog input signal present on terminals AI1 and COM. A jumper between terminals 24V and LI1 is required for proper operation. The drive is enabled based on an increase in the analog input signal above 0 vdc. Output is varied from 0 Hz to 60 Hz as the analog signal increases from 0 vdc to 10 vdc. When the signal is at 0 vdc the drive holds the fan at 0 rpm. The head pressure control set point is not adjustable. The MBB determines the control set point as required. The operating panel is shown in Fig. 17. Refer to the Quick Start Guide for how to access the programming mode, or the documentation on CD-ROM (shipped with each VFD) for a complete set of VFD parameters, fault codes and troubleshooting information.

Schneider Altivar VFD Replacement — For Altivar 21 VFDs, if the controller is replaced the parameters in Table 24 must be configured. It is recommended that the configuration of the VFD is verified per Table 24 prior to proceeding. Also, the following must be wired:

1. A jumper must be in place from terminal P24 to F.
2. Connect the red and black wires from fan board 0-10 VDC output to terminal VIA and CC respectively.
3. Connect the motor power wires T1, T2 and T3 respectively to terminal U/T1, V/T2 and W/T3 of the drive.
4. Connect the line power wires L1, L2 and L3 from control box respectively to terminal R/L1, S/L2 and T/L3 of the drive.

Table 24 — Schnieder Altivar 21 VFD Operating Parameters

PARAMETER	NAME	VALUE
uLu	Rated Motor Voltage	Nominal motor voltage(V) from rating plate
F201	VIA Speed Reference Level 1	5
F202	VIA Output Frequency Level 1	0
F203	VIA Speed Reference Level 2	100
F204	VIA Output Frequency Level 2	60
F401	Slip compensation	60%
F415	Rated Motor Current	Nominal motor current(A) from rating plate
F417	Rated Motor Speed	Nominal motor speed(RPM) from rating plate
F701	Keypad display: % or A/V	1
tHr	Motor Rated Current Overload Setting	Nominal motor current(A) from rating plate
uL	Rated Motor Frequency	60 Hz
FH	Maximum Frequency	60 Hz
LL	Low Speed	0 Hz
UL	High Speed	60 Hz
ACC	Ramp-up Time	10 Sec
dEC	Ramp-down Time	10 Sec
cnod	Remote Mode Start/Stop Control	0 (Control terminal logic inputs)
fnod	Remote Mode Primary Speed reference Source	1 (VIA)

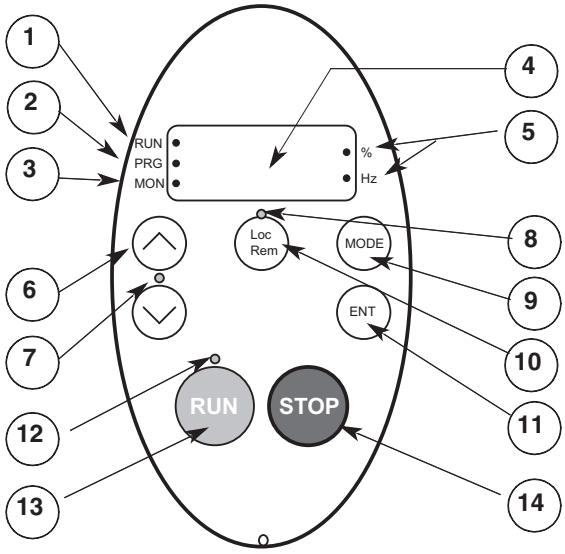

CALL OUT	LED/KEY	DESCRIPTION
1	Display RUN LED	Illuminates when a run command is applied to the drive controller. Flashes when a speed reference is present with the run command.
2	Display PRG LED	Illuminates when Programming mode is active. Flashes when -GrU menus are active.
3	Display MON LED	Illuminates when Monitoring mode is active. Flashes in fault record display mode.
4	Display Unit	4 digits, 7 segments
5	Display Unit LED	The % LED illuminates when a displayed numeric value is a percentage. The Hz LED illuminates when a displayed numeric value is in hertz.
6	Up/Down arrows	Depending on the mode, use the arrows to: navigate between the menus, change a value, or change the speed reference when Up/Down LED (7) is lit.
7	Up/Down LED	Illuminates when the Up/Down arrows are controlling the speed reference.
8	Loc/Rem LED	Illuminates when Local mode is selected.

CALL OUT	LED/KEY	DESCRIPTION
9	MODE	Press to select the Keypad mode. Modes are: Run mode (default on power-up), Programming mode, and Monitoring mode. Can also be used to go back to the previous menu.
10	Loc/Rem	Switches between Local and Remote modes.
11	ENT	Press to display a parameter's value or to save a changed value.
12	RUN LED	Illuminates when the Run key is enabled.
13	RUN	Pressing this key when the RUN LED is illuminated starts the drive controller.
14	STOP	Stop/reset key. In Local mode, pressing the STOP key causes the drive controller to stop based on the setting of parameter F721. In Remote mode, pressing the STOP key causes the drive controller to stop based on the setting of parameter F603. The display will indicate a flashing "E". If F735 is set to 0 (default setting), pressing the stop key twice will reset all resettable faults if the fault condition has been resolved.

Fig. 17 — Schnieder Altivar 21 VFD Display Panel

Cooler Pump Control (*Configuration→OPTN→PUMP*) — The 30RB units can be configured for cooler pump control. Cooler Pumps Sequence is the variable that must be confirmed in the field. Proper configuration of the cooler pump control is required to provide reliable chiller operation. The factory default setting for Cooler Pumps Sequence is ***PUMP*=0** (No Pump), for units without the factory-installed hydronic package. For units with the hydronic package, the factory default setting for Cooler Pumps Sequence is ***PUMP*=1** (1 pump only) for single pump units, or ***PUMP*=2** (2 pumps auto) for dual pump units. For dual pump hydronic option units, three control options exist. If the Cooler Pumps Sequence (***PUMP***) is set to 2, the control will start the pumps and automatically alternate the operation of the pumps to even the wear of the pumps. If a flow failure is detected, the other pump will attempt to start. Two manual control options also exist. When the Cooler Pumps Sequence is set to ***PUMP*=3** Cooler Pump 1 will always operate. When the Cooler Pumps Sequence is set to ***PUMP*=4** Cooler Pump 2 will always operate.

It is recommended for all chillers that the cooler pump control be utilized unless the chilled water pump runs continuously or the chilled water system contains a suitable concentration of antifreeze solution. When the Cooler Pumps Sequence is configured, the cooler pump output will be energized when the chiller enters an "ON" mode. The cooler pump output is also energized when certain alarms are generated. The cooler pump output should be used as an override to the external pump control if cooler pump control is not utilized. The cooler pump output is energized if a P.01 Water Exchanger Freeze Protection alarm is generated, which provides additional freeze protection if the system is not protected with a suitable antifreeze solution.

For all Cooler Pumps Sequence (***PUMP***) settings (including 0), closure of both the chilled water flow switch (CWFS) and the chilled water pump interlock contact (connected across TB-5 terminals 1 and 2) are required. In addition, for Cooler Pumps Sequence settings of ***PUMP* = 1, 2, 3, 4,** normally open auxiliary contacts for Pump 1 and Pump 2 (wired in parallel) must be connected to the violet and pink wires located in the harness from the MBB-J5C-CH18 connector. The wires in the harness are marked "PMP1-13" and "PMP1-14." See the field wiring diagram in the 30RB Installation Instructions.

Regardless of the cooler pump control option selected, if the chilled water flow switch/interlock does not close within the **MINUTES OFF TIME** (***Configuration→OPTN→DELY***) period after the unit is enabled and in an **ON** mode, alarm P.14 will be generated. Other conditions which will trigger this alarm include:

- Cooler pump interlock is open for at least 30 seconds during chiller operation.
- Lag chiller in Master/Slave Control pump interlock does not close after 1 minute of the pump start command.

- Cooler pump control is enabled and the chilled water flow switch/interlock is closed for more than 2 minutes following a command to shut down the pump.

The last alarm criterion can be disabled. If Flow Checked if Pmp Off (***Configuration→OPTN→P.LOC***) is set to **NO**, the control will ignore the pump interlock input if the cooler pump output is **OFF**.

The *Comfort*Link™ controls is the ability to periodically start the pumps to maintain the bearing lubrication and seal integrity. If Periodic Pump Start (***Configuration→OPTN→PM.PS***) is set to **YES**, and if the unit is off at 2:00 PM, a pump will be started once each day for 2 seconds. If the unit has 2 pumps, Pump 1 will be started on even days (such as day 2, 4, or 6 of the month); Pump 2 will be started on odd days. The default for this option is ***PM.PS*=NO**.

The pump will continue to run for 60 seconds after an off command is issued.

Machine Control Methods — Three variables control how the machine operates. One variable controls the machine On-Off function. The second controls the set point operation. The third variable controls the Heat-Cool operation which is always set to cool. Table 25 illustrates how the control method and cooling set point select variables direct the operation of the chiller and the set point to which it controls. Table 25 also provides the On/Off state of the machine for the given combinations.

Machine On/Off control is determined by the configuration of the Operating Type Control (***Operating Modes→SLCT →OPER***). Options to control the machine locally via a switch, on a local Time Schedule, or via a Carrier Comfort Network® command are offered.

SWITCH CONTROL — In this Operating Type Control, the Enable/Off/Remote Contact switch controls the machine locally. All models are factory configured with ***OPER*=0** (Switch Control). With the ***OPER*** set to 0, simply switching the Enable/Off/Remote Contact switch to the Enable or Remote Contact position (external contacts closed) will put the chiller in an occupied state. The unit Occupied Status (***Run Status→VIEW→OCC***) will change from **NO** to **YES**. The Status Unit Control Type (***Run Status→VIEW→CTRL***) will change from **0** (Local Off) when the switch is Off to **1** (Local On) when in the Enable position or Remote Contact position with external contacts closed.

TIME SCHEDULE — In this Operating Type Control, the machine operates under a local schedule programmed by the user as long as the Enable/Off/Remote Contact switch is in the Enable or Remote Contact position (external contacts closed). To operate under this Operating Type Control, ***Operating Modes→SLCT*** must be set to ***OPER*=1**. Two Internal Time Schedules are available. Time Schedule 1 (***Time Clock→SCH1***) is used for single set point On-Off control. Time Schedule 2 (***Time Clock→SCH2***) is used for dual set point On-Off and Occupied-Unoccupied set point control. The control will use the operating schedules as defined under the Time Clock mode in the scrolling marquee display.

CCN Global Time Schedule — A CCN Global Schedule can be utilized. The schedule number can be set anywhere from 65 to 99 for operation under a CCN global schedule. The 30RB chillers can be configured to follow a CCN Global Time Schedule broadcast by another system element. The ComfortVIEW™ Network Manager's Configure and Modify commands or the Service Tool's Modify/Names function must be used to change the number of the Occupancy Equipment Part Table Name (OCC1P01E) to the Global Schedule Number. The Schedule Number can be set from 65 to 99 (OCC1P65E).

The Occupancy Supervisory Part table name (OCC1P01S) number must be changed to configure the unit to broadcast a Global Time Schedule. The Schedule Number can be set from 65 to 99 (OCC1P65S). When OCC1PxxS is set to a value greater than 64, an occupancy flag is broadcast over the CCN every time it transitions from occupied to unoccupied or vice-versa. By configuring their appropriate Time Schedule decisions to the same number, other devices on the network can follow this same schedule. The Enable/Off/Remote Contact must be in the Enable position or Remote Contact position with the contacts closed for the unit to operate. The Status Unit Control Type (***Run Status→VIEW→STAT***) will be **0** (Local Off) when the switch is Off. The Status Unit Control Type will be **2** (CCN) when the Enable/Off/Remote Contact switch input is On.

Table 25 — Control Methods and Cooling Set Points

PARAMETER							ACTIVE SET POINT
Control Method (*OPER*)	**Heat Cool Select (*HC.SE*)**	**Setpoint Select (*SP.SE*)**	**Ice Mode Enable (*ICE.M*)**	**Ice Done (*ICE.D*)**	**Dual Setpoint Switch (*DUAL*)**	**Setpoint Occupied (*SP.OC*)**	
0 (Switch Ctrl)	0 (Cool)	1 (Setpoint1)	—	—	—	—	***CSP.1***
			Enable	Open	Closed	—	***CSP.3***
		2 (Setpoint2)	—	—	—	—	***CSP.2***
			Enable	Open	Closed	—	***CSP.3***
		3 (4-20mA Setp)	—	—	—	—	4-20 mA
		—	Enable	Open	Open	—	***CSP.1***
					Closed	—	***CSP.3***
				Closed	Closed	—	***CSP.2***
		4 (Dual Setp Sw)	—	—	Open	—	***CSP.1***
					Closed	—	***CSP.2***
			Enabled	Open	Closed	—	***CSP.3***
				Closed	Closed	—	***CSP.2***
1 (Time Sched)	0 (Cool)	0 (Setpoint Occ)	—	—	—	Occupied	***CSP.1***
						Unoccupied	***CSP.2***
			Enable	Open	—	Unoccupied	***CSP.3***
				Closed	—		***CSP.2***
2 (CCN)	0 (Cool)	—	—	—	—	Occupied	***CSP.1***
					—	Unoccupied	***CSP.2***
			Enable	Open	—	Unoccupied	***CSP.3***

— = No Effect

CCN CONTROL — An external CCN device such as Chillervisor controls the On/Off state of the machine. This CCN device forces the variable CHIL_S_S between Start/Stop to control the chiller. The Status Unit Control Type (***Run Status→VIEW→STAT***) will be **0** (Local Off) when the Enable/Off/Remote Contact switch is Off. The Status Unit Control Type will be **2** (CCN) when the Enable/Off/Remote Contact switch is in the enable or remote contact position with external contacts closed and the CHIL_S_S variable is Stop or Start.

UNIT RUN STATUS (***Run Status→VIEW→STAT***) — As the unit transitions from off to on and back to off, the Unit Run Status will change based on the unit's operational status. The variables are: **0** (Off), **1** (Running), **2** (Stopping), and **3** (Delay).

- 0 indicates the unit is Off due to the Enable/Off/Remote Contact Switch, a time schedule or CCN command.
- 1 indicates the unit is operational.
- 2 indicates the unit is shutting down due to the command to shut down from the Enable/Off/Remote Contact Switch, a time schedule or CCN command.
- 3 indicates the unit has received a command to start from Enable/Off/Remote Contact Switch, a time schedule or CCN command, and is waiting for the start-up timer (***Configuration→OPTN→DELY***) to expire.

Cooling Set Point Selection (*Operating Modes →SLCT→SP.SE*) — Several options for controlling the Leaving Chilled Water Set Point are offered and are configured by the Cooling Set Point Select variables. In addition to the Cooling Set Point Select, Ice Mode Enable (***Configuration→OPTN→ICE.M***), and Heat Cool Select (***Operating Modes→ SLCT→HC.SE***) variables also have a role in determining the set point of the machine. All units are shipped from the factory with the Heat Cool Select variable set to ***HC.SE*=0** (Cooling). All set points are based on Leaving Water Control, (***Configuration→SERV→EWTO*=NO**).

In all cases, there are limits on what values are allowed for each set point. These values depend on the Cooler Fluid Type (***Configuration→SERV→FLUD***) and the Brine Freeze Set point (***Configuration→SERV→LOSP***). See Table 26.

Table 26 — Configuration Set Point Limits

SET POINT LIMIT	COOLER FLUID TYPE, FLUD	
	1 = Water	2 = Medium Brine
Minimum*	38 F (3.3 C)	14 F (–10.0 C)
Maximum	60 F (15.5 C)	

*The minimum set point for Medium Temperature Brine applications is related to the Brine Freeze Point. The set point is limited to be no less than the Brine Freeze Point +5° F (2.8° C).

SET POINT 1 (***Operating Modes→SLCT→SP.SE*=1**) — When Set Point Select is configured to 1, the unit's active set point is based on Cooling Set Point 1 (***Set Point→COOL→CSP.1***).

SET POINT 2 (***Operating Modes→SLCT→SP.SE*=2**) — When Set Point Select is configured to 2, the unit's active set point is based on Cooling Set Point 2 (***Set Point→COOL→CSP.2***).

4 TO 20 mA INPUT (***Operating Modes→SLCT →SP.SE*=3**) — When Set Point Select is configured to 3, the unit's active set point is based on an external 4 to 20 mA signal input to the Energy Management Module (EMM).

See Table 25 for Control Methods and Cooling Set Points. The following equation is used to control the set point. See Fig. 18.

$$\text{Set Point} = 10 + 70(\text{mA} - 4)/16 \text{ (deg F)}$$
$$\text{Set Point} = -12.2 + 38.9(\text{mA} - 4)/16 \text{ (deg C)}$$

DUAL SWITCH (***Operating Modes→SLCT→SP.SE*=4**) — When Set Point Select is configured to 4, the unit's active set point is based on Cooling Set Point 1 (***Set Point→COOL→CSP.1***) when the Dual Set Point switch contacts are open and Cooling Set Point 2 (***Set Point→COOL→CSP.2***) when they are closed.

Ice Mode — Operation of the machine to make and store ice can be accomplished many ways. The Energy Management Module and an Ice Done Switch is required for operation in the Ice Mode. In this configuration, the machine can operate with up to three cooling set points: Cooling Set Point 1 (Occupied) (***Set Point→COOL→CSP.1***), Cooling Set Point 2 (Unoccupied) (***Set Point→COOL→CSP.2***), and Ice Set Point (***Set Point→COOL→CSP.3***).

SET POINT OCCUPANCY (***Operating Modes→ SLCT→SP.SE*=0**) — When Set point Select is configured to 0, the unit's active set point is based on Cooling Set Point 1 (***Set Point→COOL→CSP.1***) during the occupied period while operating under ***Time Clock→SCH1***. If the ***Time Clock →SCH2*** is in use, the unit's active set point is based on Cooling Set Point 1 (***Set Point→COOL→CSP.1***) during the occupied period and Cooling Set Point 2 (***Set Point →COOL→CSP.2***) during the unoccupied period.

Temperature Reset — Temperature reset is a value added to the basic leaving fluid temperature set point. The sum of these values is the control point. When a non-zero temperature reset is applied, the chiller controls to the control point, not the set point. The control system is capable of handling leaving-fluid temperature reset based on cooler fluid temperature difference. Because the change in temperature through the cooler is a measure of the building load, the temperature difference reset is in effect an average building load reset method. The control system is also capable of temperature reset based on outdoor-air temperature (OAT), space temperature (SPT), or from an externally powered 4 to 20 mA signal. An accessory sensor must be used for SPT reset (33ZCT55SPT). The energy management module (EMM) is required for temperature reset using space temperature or a 4 to 20 mA signal.

Under normal operation, the chiller will maintain a constant leaving fluid temperature approximately equal to the chilled fluid set point. As the cooler load varies, the cooler fluid temperature difference will change in proportion to the load as shown in Fig. 19. Usually the chiller size and leaving-fluid temperature set point are selected based on a full-load condition. At part load, the fluid temperature set point may be lower than required. If the leaving fluid temperature were allowed to increase at part load, the efficiency of the machine would increase.

Temperature difference reset allows for the leaving temperature set point to be reset upward as a function of the fluid temperature difference or, in effect, the building load.

To use Water Temperature Difference Reset, four variables must be configured. They are: Cooling Reset Type (***Configuration→RSET→CRST***), Delta T No Reset Temp (***Setpoints→COOL→CRT1***), Delta T Full Reset Temp (***Setpoints→COOL→CRT2***) and Degrees Cool Reset (***Setpoints→COOL→DGRC***). In the following example using Water Temperature Difference Reset, the chilled water temperature will be reset by 5.0° F (2.8° C) when the ΔT is 2° F (1.1° C) and 0° F (0° C) reset when the ΔT is 10° F. The variable ***CRT1*** should be set to the cooler temperature difference (ΔT) where no chilled water temperature reset should occur. The variable ***CRT2*** should be set to the cooler temperature difference where the maximum chilled water temperature reset should occur. The variable ***DGRC*** should be set to the maximum amount of reset desired. To verify that reset is functioning correctly proceed to ***Run Status→VIEW***, and subtract the active set point (***SETP***) from the control point (***CTPT***) to determine the degrees reset. See Fig. 19 and Table 27.

Other, indirect means of estimating building load and controlling temperatures reset are also available and are discussed below. See Fig. 20.

To use Outdoor Air Temperature Reset, four variables must be configured. They are: Cooling Reset Type (***Configuration →RSET→CRST***), OAT No Reset Temp (***Setpoints→ COOL→CRO1***), OAT Full Reset Temp (***Setpoints→ COOL→CRO2***) and Degrees Cool Reset (***Setpoints→ COOL→DGRC***). In the following example, the outdoor air temperature reset example provides 0° F (0° C) chilled water set point reset at 85.0 F (29.4 C) outdoor-air temperature and 15.0° F (8.3° C) reset at 55.0 F (12.8 C) outdoor-air temperature. See Fig. 21 and Table 28.

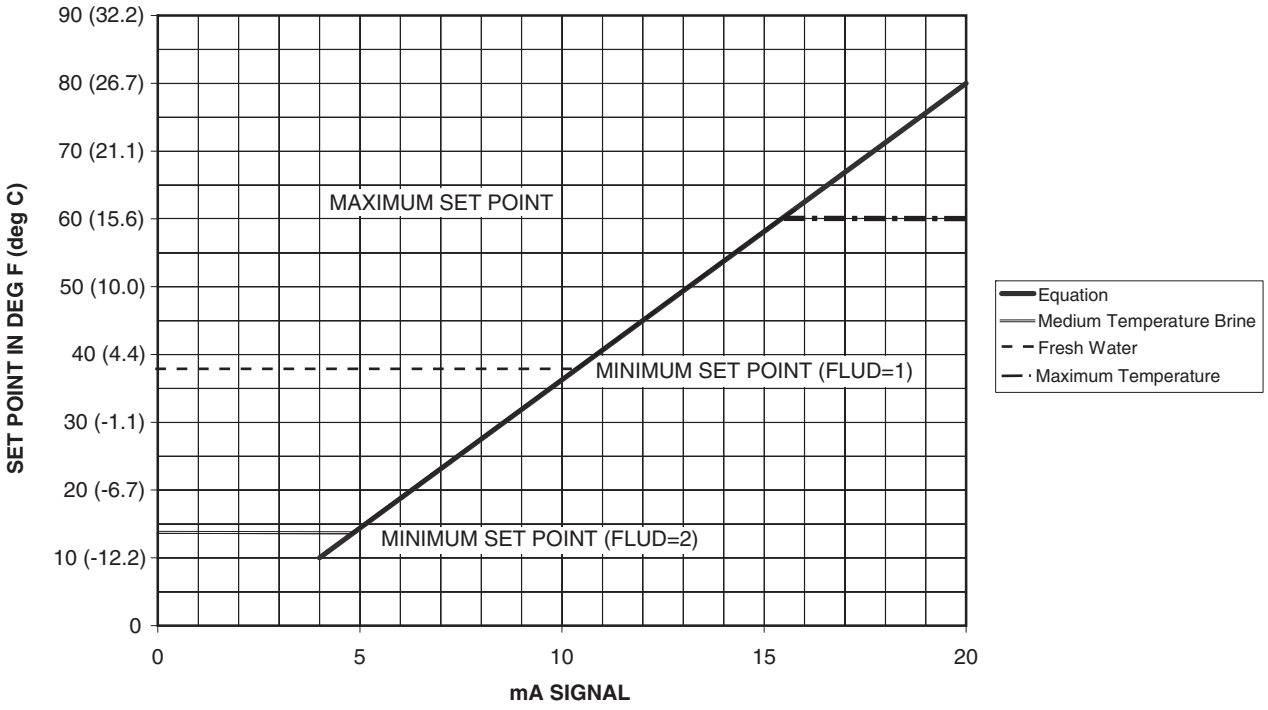

Fig. 18 — 4 to 20 mA Set Point Control

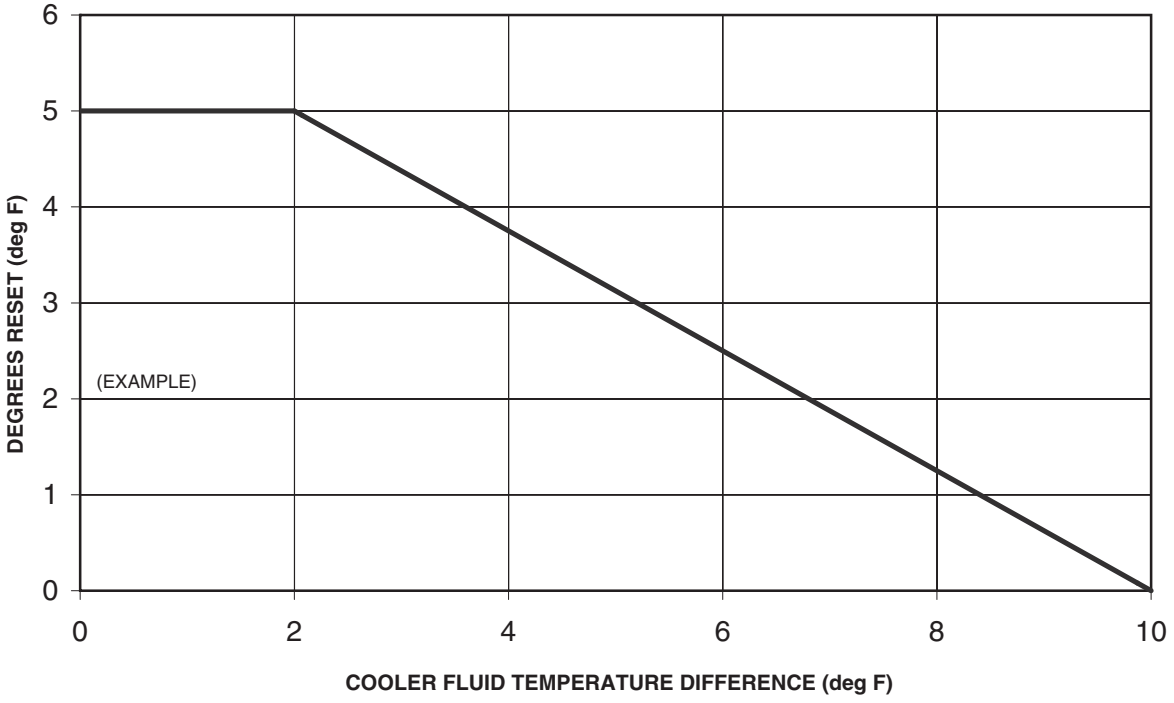

Fig. 19 — Water Temperature Difference Reset

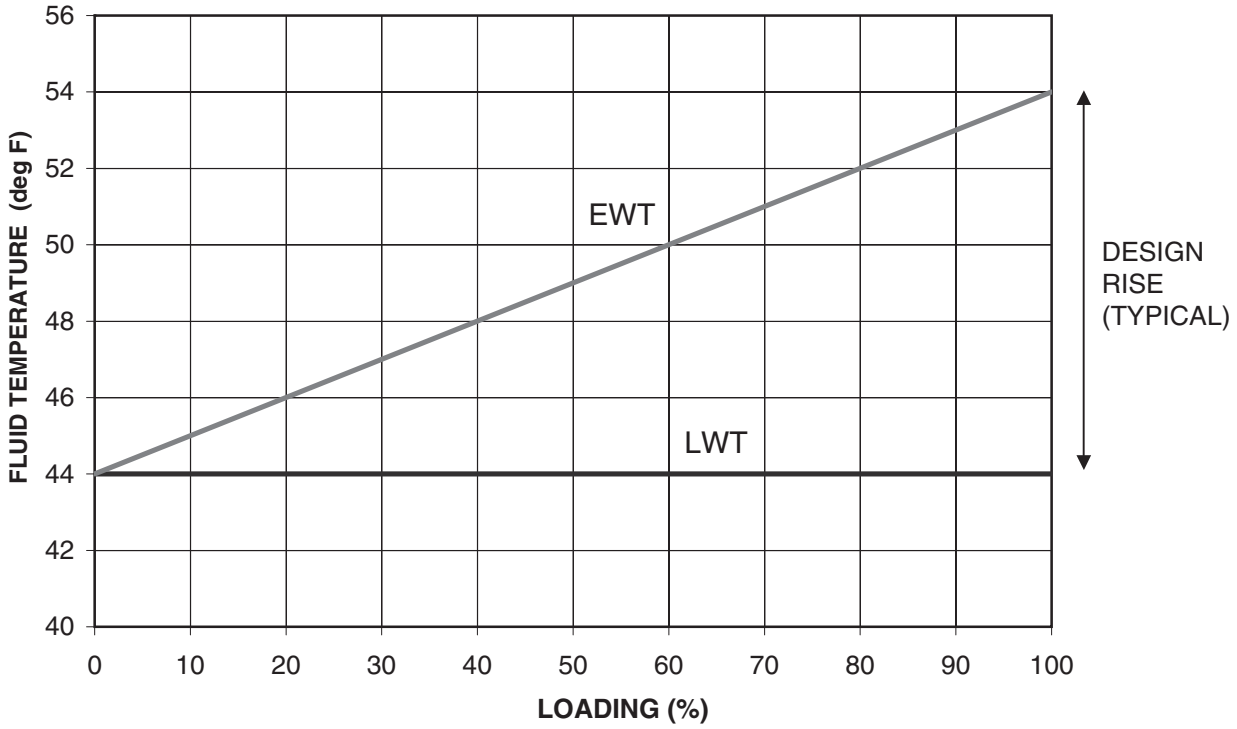

LEGEND
EWT — Entering Water Temperature
LWT — Leaving Water Temperature

Fig. 20 — Chilled Water Temperature Control

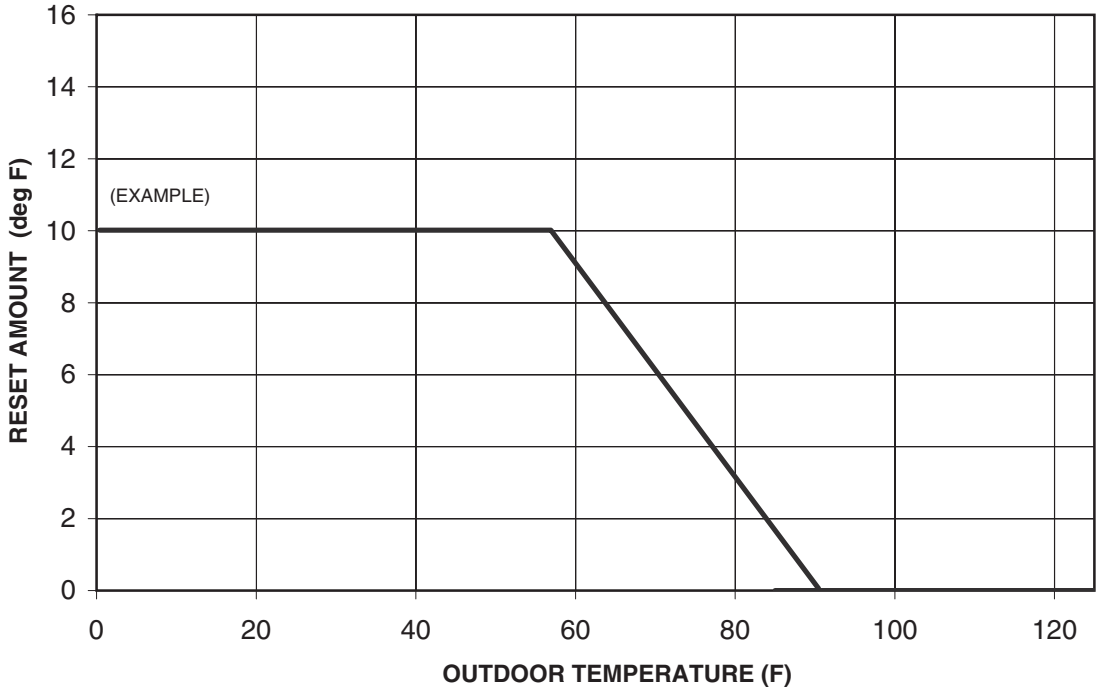

Fig. 21 — Outdoor Air Temperature Reset

Table 27 — Water Temperature Difference Reset Configuration

MODE	KEYPAD ENTRY	DISPLAY	ITEM EXPANSION	COMMENT
CONFIGURATION	ENTER	**DISP**		
	↓	**UNIT**		
	↓	**SERV**		
	↓	**OPTN**		
	↓	**RSET**	Reset Cool and Heat Tmp	
	ENTER	CRST	Cooling Reset Type	
	ENTER	0	No Reset	
	ENTER	0	No Reset	Flashing to indicate Edit mode. May require Password
	↓ / ↑	2	Delta T Temp	Use up or down arrows to change value to 2.
	ENTER	2		Accepts the change.
	ESCAPE	CRST		
	ESCAPE			At mode level
SETPOINTS	↓ / ↑			Change to Setpoints Mode
	ENTER	**COOL**	Cooling Setpoints	
	ENTER	CSP.1	Cooling Setpoint 1	
	↓ x 4	CRV.2		
	↓	CRT1	Delta T No Reset Temp	Cooler Temperature difference where no temperature reset is required.
	ENTER	0		Value of CRT1
	ENTER	0		Flashing to indicate Edit mode
	↑	10.0		Value of No Temperature Reset, 10 from the example.
	ENTER	10.0		Accepts the change.
	ESCAPE	CRT1		
	↓	CRT2	Delta T Full Reset Temp	Cooler Temperature difference where full temperature reset, DGRC is required.
	ENTER	0		Value of CRT2.
	ENTER	0		Flashing to indicate Edit mode
	↑	2.0		Value of full Temperature Reset, 2 from the example.
	ENTER	2.0		Accepts the change.
	ESCAPE	CRT2		
	↓ x 4	CRS2		
	↓	DGRC	Degrees Cool Reset	Amount of temperature reset required.
	ENTER	0		Value of DGRC
	ENTER	0		Flashing to indicate Edit mode
	↑	5.0		Amount of Temperature Reset required, 5 from the example.
	ENTER	5.0		Accepts the change.
	ESCAPE	DGRC		

NOTE: **Bold** values indicate sub-mode level.

Table 28 — OAT Reset Configuration

MODE	KEYPAD ENTRY	DISPLAY	ITEM EXPANSION	COMMENT
CONFIGURATION	ENTER	**DISP**		
	↓	**UNIT**		
	↓	**SERV**		
	↓	**OPTN**		
	↓	**RSET**	Reset Cool and Heat Tmp	
	ENTER	CRST	Cooling Reset Type	
	ENTER	0	No Reset	
	ENTER	0	No Reset	Flashing to indicate Edit mode. May require Password
	↓ / ↑	1	Out Air Temp	Use up or down arrows to change value to 1.
	ENTER	1		Accepts the change.
	ESCAPE	CRST		
	ESCAPE			At mode level
SETPOINTS	↓ / ↑			Change to Setpoints Mode
	ENTER	**COOL**	Cooling Setpoints	
	ENTER	CSP.1	Cooling Setpoint 1	
	↓ x 6	CRT.2		
	↓	CRO1	OAT No Reset Temp	Outdoor Temperature where no temperature reset is required.
	ENTER	0		Value of CRO1
	ENTER	0		Flashing to indicate Edit mode
	↑	85.0		Value of No Temperature Reset, 85 from the example.
	ENTER	85.0		Accepts the change.
	ESCAPE	CRO1		
	↓	CRO2	OAT Full Reset Temp	Outdoor Temperature where full temperature reset, DGRC is required.
	ENTER	0		Value of CRO2.
	ENTER	0		Flashing to indicate Edit mode
	↑	55.0		Value of full Temperature Reset, 55 from the example.
	ENTER	55.0		Accepts the change.
	ESCAPE	CRO2		
	↓	CRS1		
	↓	CRS2		
	↓	DGRC	Degrees Cool Reset	Amount of temperature reset required.
	ENTER	0		Value of DGRC
	ENTER	0		Flashing to indicate Edit mode
	↑	15.0		Amount of Temperature Reset required, 15 from the example.
	ENTER	15.0		Accepts the change.
	ESCAPE	DGRC		

NOTE: **Bold** values indicate sub-mode level.

To use Space Temperature Reset in addition to the energy management module, four variables must be configured. They are: Cooling Reset Type (***Configuration→RSET→CRST***), Space T No Reset Temp (***Setpoints→COOL→CRS1***), Space T Full Reset Temp (***Setpoints→COOL→CRS2***) and Degrees Cool Reset (***Setpoints→COOL→DGRC***). In the following space temperature reset example, 0° F (0° C) chilled water set point reset at 72.0 F (22.2 C) space temperature and 6.0° F (3.3° C) reset at 68.0 F (20.0 C) space temperature. See Fig. 22 and Table 29.

To use 4-20 mA Temperature Reset in addition to the energy management module, four variables must be configured. They are: Cooling Reset Type (***Configuration→RSET →CRST***), Current No Reset Val (***Setpoints→COOL→CRV1***), Current Full Reset Val (***Setpoints→COOL→CRV2***) and Degrees Cool Reset (***Setpoints→COOL→DGRC***). In the following example, at 4 mA no reset takes place. At 20 mA, 5° F (2.8° C) chilled water set point reset is required. See Fig. 23 and Table 30.

⚠ CAUTION

Care should be taken when interfacing with other control systems due to possible power supply differences such as a full wave bridge versus a half wave rectification. Connection of control devices with different power supplies may result in permanent damage. *Comfort*Link™ controls incorporate power supplies with half wave rectification. A signal isolation device should be utilized if the signal generator incorporates a full wave bridge rectifier.

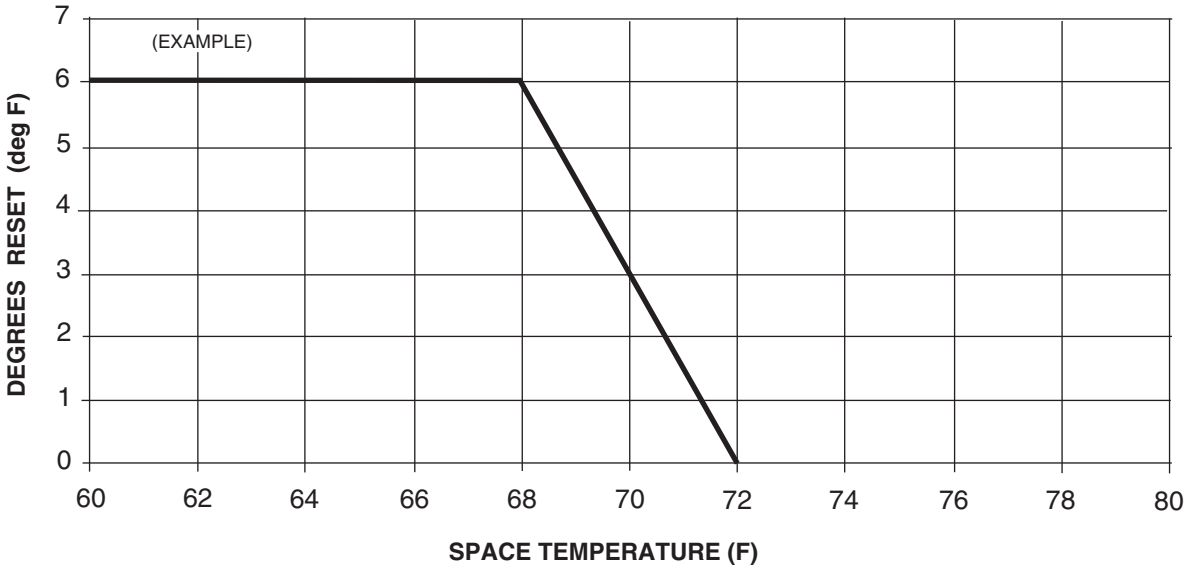

Fig. 22 — Space Temperature Reset

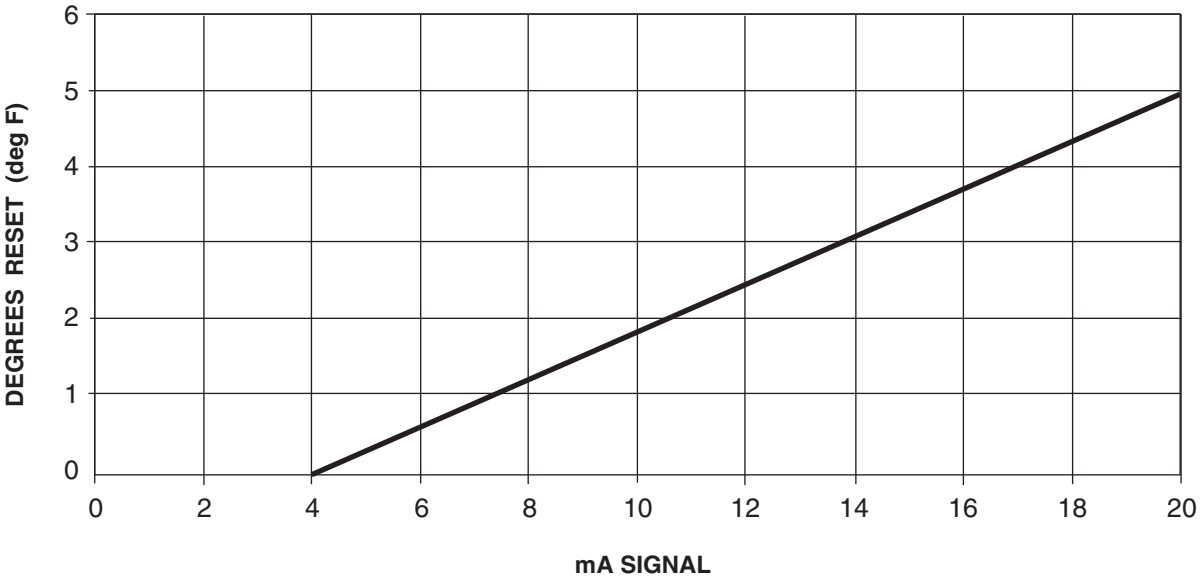

Fig. 23 — 4 to 20 mA Temperature Reset

Table 29 — Space Temperature Reset Configuration

MODE	KEYPAD ENTRY	DISPLAY	ITEM EXPANSION	COMMENT
CONFIGURATION	ENTER	**DISP**		
	↓	**UNIT**		
	↓	**SERV**		
	↓	**OPTN**		
	↓	**RSET**	Reset Cool and Heat Tmp	
	ENTER	CRST	Cooling Reset Type	
	ENTER	0	No Reset	
	ENTER	0	No Reset	Flashing to indicate Edit mode. May require Password
	↓ / ↑	4	Space Temp	Use up or down arrows to change value to 4.
	ENTER	4		Accepts the change.
	ESCAPE	CRST		
	ESCAPE			At mode level
SETPOINTS	↓ / ↑			Change to Setpoints Mode
	ENTER	**COOL**	Cooling Setpoints	
	ENTER	CSP.1	Cooling Setpoint 1	
	↓ x 8	CRO2		
	↓	CRS1	Space T No Reset Temp	Space Temperature where no temperature reset is required.
	ENTER	0		Value of CRS1
	ENTER	0		Flashing to indicate Edit mode
	↑	72.0		Value of No Temperature Reset, 72 from the example.
	ENTER	72.0		Accepts the change.
	ESCAPE	CRS1		
	↓	CRS2	Space T Full Reset Temp	Space Temperature where full temperature reset, DGRC is required.
	ENTER	0		Value of CRS2.
	ENTER	0		Flashing to indicate Edit mode
	↑	68.0		Value of full Temperature Reset, 68 from the example.
	ENTER	68.0		Accepts the change.
	ESCAPE	CRS2		
	↓	DGRC	Degrees Cool Reset	Amount of temperature reset required.
	ENTER	0		Value of DGRC
	ENTER	0		Flashing to indicate Edit mode
	↑	6.0		Amount of Temperature Reset required, 6 from the example.
	ENTER	6.0		Accepts the change.
	ESCAPE	DGRC		

NOTE: **Bold** values indicate sub-mode level.

Table 30 — 4 to 20 mA Temperature Reset Configuration

MODE	KEYPAD ENTRY	DISPLAY	ITEM EXPANSION	COMMENT
CONFIGURATION	ENTER	**DISP**		
	↓	**UNIT**		
	↓	**SERV**		
	↓	**OPTN**		
	↓	**RSET**	Reset Cool and Heat Tmp	
	ENTER	CRST	Cooling Reset Type	
	ENTER	0	No Reset	
	ENTER	0	No Reset	Flashing to indicate Edit mode. May require Password
	↓ / ↑	3	4-20 mA Input	Use up or down arrows to change value to 3.
	ENTER	3		Accepts the change.
	ESCAPE	CRST		
	ESCAPE			At mode level
SETPOINTS	↓ / ↑			Change to Setpoints Mode
	ENTER	**COOL**	Cooling Setpoints	
	ENTER	CSP.1	Cooling Setpoint 1	
	↓ x 2	CSP.3	Cooling Setpoint 3	
	↓	CRV1	Current No Reset Val	Outdoor Temperature where no temperature reset is required.
	ENTER	0		Value of CRV1
	ENTER	0		Flashing to indicate Edit mode
	↑	4.0		Value of No Temperature Reset, 4 from the example.
	ENTER	4.0		Accepts the change.
	ESCAPE	CRV1		
	↓	CRV2	Current Full Reset Val	Current value where full temperature reset, DGRC is required.
	ENTER	0		Value of CRV2.
	ENTER	0		Flashing to indicate Edit mode
	↑	20.0		Value of full Temperature Reset, 20 from the example.
	ENTER	20.0		Accepts the change.
	ESCAPE	CRV2		
	↓ x 6	CRS2		
	↓	DGRC	Degrees Cool Reset	Amount of temperature reset required.
	ENTER	0		Value of DGRC
	ENTER	0		Flashing to indicate Edit mode
	↑	5.0		Amount of Temperature Reset required, 5 from the example.
	ENTER	5.0		Accepts the change.
	ESCAPE	DGRC		

NOTE: **Bold** values indicate sub-mode level.

Demand Limit — Demand limit is a feature that allows the unit capacity to be limited during periods of peak energy usage. There are three types of demand limiting that can be configured. The first type is through 2-step switch control, which will reduce the maximum capacity to 2 user-configurable percentages. The second type is by 4 to 20 mA signal input which will reduce the maximum capacity linearly between 100% at a 4 mA input signal (no reduction) down to the user-configurable level at a 20 mA input signal. The third type uses the CCN Loadshed module and has the ability to limit the current operating capacity to maximum and further reduce the capacity if required.

NOTE: One-step Demand Limit is standard.

The 2-step switch control and 4 to 20-mA input signal types of demand limiting require the energy management module (EMM).

To use demand limit, select the type of demand limiting to use. Then configure the demand limit set points based on the type selected.

2-STEP SWITCH CONTROLLED — If using 2-step demand limit control, an energy management module must be installed. One-step demand limit control does not require the energy management module. To configure demand limit for 2-step switch control, three parameters must be configured: Demand Limit Select (***Configuration→RSET→DMDC***), Switch Limit Setpoint 1 (***Setpoints→MISC→DLS1***) and Switch Limit Setpoint 2 (***Setpoints→MISC→DLS2***). In the following example, Demand Limit Switch 1 is 60% and demand limit Switch 2 is 40%. Demand limit steps are controlled by two relay switch inputs field wired to TB5 for Switch 1 and TB6 for Switch 2. See Table 31.

For demand limit by 2-stage switch control, closing the first stage demand limit contact will put the unit on the first demand limit level. The unit will not exceed the percentage of capacity entered as Demand Limit Switch 1 set point. Closing contacts on the second demand limit switch prevents the unit from exceeding the capacity entered as Demand Limit Switch 2 set point. The demand limit stage that is set to the lowest demand takes priority if both demand limit inputs are closed. If the demand limit percentage does not match unit staging, the unit will limit capacity to the closest capacity stage without exceeding the value. To disable demand limit configure ***DMDC*** to **0**.

EXTERNALLY POWERED (4 to 20 mA Controlled) — The energy management module is required for 4 to 20 mA demand limit control. To configure demand limit for 4 to 20 mA control three parameters must be configured. They are: Demand Limit Select (***Configuration→RSET→DMDC***), mA for 100% Demand Limit (***Configuration→RSET→DMMX***) and mA for 0% Demand Limit (***Configuration→RSET→DMZE***). In the following example, a 4 mA signal is Demand Limit 100% and a 20 mA Demand Limit signal is 0%. The 4 to 20 mA signal is connected to TB6-1 and TB6-2. The demand limit is a linear interpolation between the two values entered. See Table 32 and Fig. 24.

⚠ CAUTION

Care should be taken when interfacing with other control systems due to possible power supply differences such as a full wave bridge versus a half wave rectification. Connection of control devices with different power supplies may result in permanent damage. *Comfort*Link™ controls incorporate power supplies with half wave rectification. A signal isolation device should be utilized if the signal generator incorporates a full wave bridge rectifier.

In Fig. 24, if the machine receives a 12 mA signal, the machine controls will limit the capacity to 50%.

CCN LOADSHED CONTROLLED — To configure demand limit for CCN Loadshed control, the unit Operating Type Control must be in CCN control, (***Operating Modes→SLCT→SP.SE*=2**) and be controlled by a Chillervisor module. The Chillervisor module can force the demand limit variable and directly control the capacity of the machine. Additionally, the unit's set point will be artificially lowered to force the chiller to load to the demand limit value.

Remote Alarm and Alert Relays — The 30RB chiller can be equipped with a remote alert and remote alarm annunciator contacts. Both relays connected to these contacts must be rated for a maximum power draw of 10 va sealed, 25 va inrush at 24 volts. The alarm relay, indicating that the complete unit has been shut down can be connected to TB5-12 and TB5-13. For an alert relay, indicating that at least 1 circuit was off due to the alert, a field-supplied and installed relay must be connected between MBB-J3-CH25-3 and TB5-13.

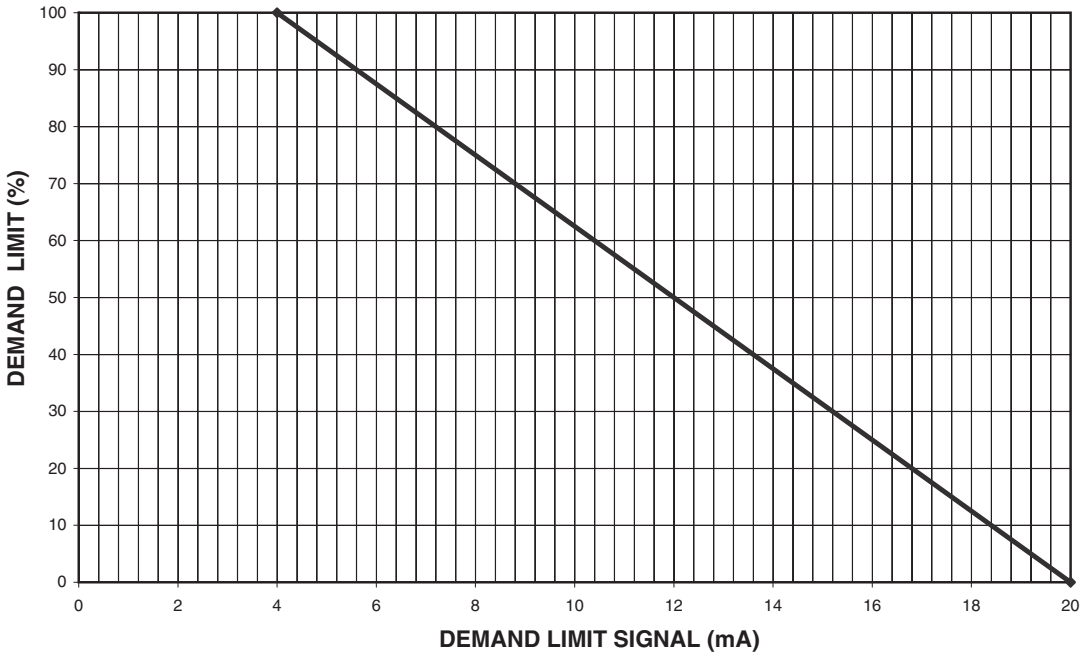

Fig. 24 — Demand Limit

Table 31 — 2-Step Demand Limit Configuration

MODE	KEYPAD ENTRY	DISPLAY	ITEM EXPANSION	COMMENT
CONFIGURATION	ENTER	**DISP**		
	↓	**UNIT**		
	↓	**SERV**		
	↓	**OPTN**		
	↓	**RSET**	Reset Cool and Heat Tmp	
	ENTER	CRST		
	↓	HRST		
	↓	DMDC	Demand Limit Select	
	ENTER	0	None	
	ENTER	0	None	Flashing to indicate Edit mode. May require Password
	↓ / ↑	1	Switch	Use up or down arrows to change value to 1.
	ENTER	1		Accepts the change.
	ESCAPE	DMDC		
	ESCAPE			At mode level
SETPOINTS	↓ / ↑			Change to Setpoints Mode
	ENTER	**COOL**	Cooling Setpoints	
	↓	HEAT		
	↓	MISC	Miscellaneous Setpoints	
	ENTER	DLS1	Switch Limit Setpoint 1	
	ENTER	0	None	Current value for DLS1.
	ENTER	0	None	Flashing to indicate Edit mode. May require Password
	↑	60	Switch	Use arrows to change value to 60 from the example.
	ENTER	60		Accepts the change.
	ESCAPE	DLS1		
	↓	DLS2	Switch Limit Setpoint 2	
	ENTER	0		Current value of DLS2
	ENTER	0		Flashing to indicate Edit mode
	↑	40		Use arrows to change the value for DLS2 to 40 from the example.
	ENTER	40		Accepts the change.
	ESCAPE	DLS2		
	ESCAPE x 2	DGRC	SETPOINTS	

NOTE: **Bold** values indicate sub-mode level.

Table 32 — Externally Powered Demand Limit Configuration

MODE	KEYPAD ENTRY	DISPLAY	ITEM EXPANSION	COMMENT
CONFIGURATION	ENTER	**DISP**		
	↓	**UNIT**		
	↓	**SERV**		
	↓	**OPTN**		
	↓	**RSET**	Reset Cool and Heat Tmp	
	ENTER	CRST		
	↓	HRST		
	↓	DMDC	Demand Limit Select	
	ENTER	0	None	
	ENTER	0	None	Flashing to indicate Edit mode. May require Password
	↑	2	4-20 mA Input	Use up arrows to change value to 2.
	ENTER	2		Accepts the change.
	ESCAPE	DMDC		
	↓	DMMX	mA for 100% Demand Limit	
	ENTER	0		
	ENTER	0		Flashing to indicate Edit mode
	↑	4.0		Use up arrows to change the value to 4.
	ESCAPE	DMMX		
	↓	DMZE	mA for 0% Demand Limit	
	ENTER	0		
	ENTER	0		Flashing to indicate Edit mode
	↑	20.0		Use up arrows to change value to 20.
	ESCAPE	DMZE		

NOTE: **Bold** values indicate sub-mode level.

PRE-START-UP

> IMPORTANT: Complete the Start-Up Checklist for 30RB Liquid Chillers at the end of this publication.
>
> The checklist assures proper start-up of a unit, and provides a record of unit condition, application requirements, system information, and operation at initial start-up.

Do not attempt to start the chiller until the following checks have been completed.

System Check

1. Check auxiliary components, such as the chilled fluid circulating pump, air-handling equipment, or other equipment to which the chiller supplies liquid are operational. Consult manufacturer's instructions. If the unit has field-installed accessories, be sure all are properly installed and wired correctly. Refer to unit wiring diagrams.
2. Open compressor suction (if equipped) and discharge shutoff valves.
3. Open liquid line shut off valves.
4. Fill the chiller fluid circuit with clean water (with recommended inhibitor added) or other non-corrosive fluid to be cooled. Bleed all air out of high points of system. An air vent is included with the cooler. If outdoor temperatures are expected to be below 32 F (0° C), sufficient inhibited propylene glycol or other suitable corrosion inhibited antifreeze should be added to the chiller water circuit to prevent possible freeze-up.

   The chilled water loop must be cleaned before the unit is connected. Units supplied with the accessory hydronic package include a run in screen. If the run-in screen is left in the suction guide/strainer, it is recommended that the Service Maintenance be set to alert the operator within 24 hours of start-up to be sure that the run-in screen in the suction guide/strainer is removed. To set the time for the parameter, go to ***Time Clock→MCFG→ W.FIL***. Values for this item are counted as days. Refer to the hydronic pump package literature if unit is equipped with the optional hydronic pump package.
5. Check tightness of all electrical connections.
6. Oil should be visible in the compressor sight glass. An acceptable oil level in the compressor is from $^{3}/_{4}$ to $^{7}/_{8}$ full sight glass. Adjust the oil level as required. No oil should be removed unless the crankcase heater has been energized for at least 24 hours. See Oil Charge section for Carrier-approved oils.
7. Electrical power source must agree with unit nameplate.

8. Crankcase heaters must be firmly seated under compressor, and must be energized for 24 hours prior to start-up.
9. Verify power supply phase sequence. Fan motors are 3 phase. Check rotation of non-VFD controlled fans by using the quick test. Fan rotation is counterclockwise as viewed from top of unit. If fan is not turning counterclockwise, reverse 2 of the power wires at the main terminal block.
10. Check compressor mounting sled. Shipping bolts must be removed.

START-UP

⚠ CAUTION

Do not manually operate contactors. Serious damage to the machine may result.

Actual Start-Up — *Actual start-up should be done only under supervision of a qualified refrigeration technician.*

1. Be sure all shut off valves are open. Units are shipped from factory with suction valves (if equipped) open. Discharge and liquid line shut off valves are closed.
2. Using the scrolling marquee display, set leaving-fluid set point (***Setpoints→COOL→CSP.1***). No cooling range adjustment is necessary.
3. If optional control functions or accessories are being used, the unit must be properly configured. Refer to Configuration Options section for details.
4. Start chilled fluid pump, if unit is not configured for pump control, (***Configuration→OPTN→PUMP*= 0**).
5. Complete the Start-Up Checklist to verify all components are operating properly.
6. Turn ENABLE/OFF/REMOTE CONTACT switch to ENABLE position.
7. Allow unit to operate and confirm that everything is functioning properly. Check to see that leaving fluid temperature agrees with leaving set point Control Point (***Run Status→VIEW→CTPT***).

Operating Limitations

TEMPERATURES — Unit operating temperature limits are listed in Table 33.

Table 33 — Temperature Limits for Standard Units

TEMPERATURE	F	C
Maximum Ambient Temperature	125	52
Minimum Ambient Temperature	32	0
Maximum Cooler EWT*	95	35
Maximum Cooler LWT	60	15
Minimum Cooler LWT†	40	4.4

LEGEND

EWT — Entering Fluid (Water) Temperature
LWT — Leaving Fluid (Water) Temperature

*For sustained operation, EWT should not exceed 85 F (29.4 C).
†Unit requires brine modification for operation below this temperature.

Low Ambient Operation — If unit operating temperatures below 32 F (0° C) are expected, refer to separate unit installation instructions for low ambient temperature operation using accessory low ambient temperature head pressure control, if not equipped. Contact a Carrier representative for details.

NOTE: Wind baffles and brackets must be field-fabricated and installed for all units using accessory low ambient head pressure control to ensure proper cooling cycle operation at low-ambient temperatures. See the 30RB Installation Instructions or the low ambient temperature head pressure control accessory installation instructions for more information.

⚠ CAUTION

Brine duty application (below 40 F [4.4 C] leaving chilled water temperature) for chiller normally requires factory modification. Contact a Carrier representative for details regarding specific applications. Operation below 40 F (4.4 C) leaving chilled water temperature without modification can result in compressor failure.

VOLTAGE

Main Power Supply — Minimum and maximum acceptable supply voltages are listed in the Installation Instructions.

Unbalanced 3-Phase Supply Voltage — Never operate a motor where a phase imbalance between phases is greater than 2%.

To determine percent voltage imbalance:

$$\% \text{ Voltage Imbalance} = 100 \times \frac{\text{max voltage deviation from avg voltage}}{\text{average voltage}}$$

The maximum voltage deviation is the largest difference between a voltage measurement across 2 legs and the average across all 3 legs.

Example: Supply voltage is 240-3-60.

AB = 243v
BC = 236v
AC = 238v

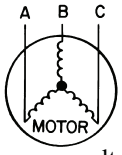

1. Determine average voltage:

$$\text{Average voltage} = \frac{243+236+238}{3} = \frac{717}{3} = 239$$

2. Determine maximum deviation from average voltage:
   (AB) 243 – 239 = 4 v
   (BC) 239 – 236 = 3 v
   (AC) 239 – 238 = 1 v
   Maximum deviation is 4 v.
3. Determine percent voltage imbalance:

$$\% \text{ Voltage Imbalance} = 100 \times \frac{4}{239} = 1.7\%$$

This voltage imbalance is satisfactory as it is below the maximum allowable of 2%.

IMPORTANT: If the supply voltage phase imbalance is more than 2%, contact the local electric utility company immediately. Do not operate unit until imbalance condition is corrected.

MINIMUM FLUID LOOP VOLUME — To obtain proper temperature control, loop fluid volume must be at least 3 gallons per ton (3.25 L per kW) of chiller nominal capacity for air conditioning and at least 6 gallons per ton (6.5 L per kW) for process applications or systems that must operate at low ambient temperatures (below 32 F [0° C]). Refer to application information in Product Data literature for details.

FLOW RATE REQUIREMENTS — Standard chillers should be applied with nominal flow rates within those listed in the Minimum and Maximum Cooler Flow Rates table. Higher or lower flow rates are permissible to obtain lower or higher temperature rises. Minimum flow rates must be exceeded to assure turbulent flow and proper heat transfer in the cooler. See Table 34.

⚠ CAUTION

Operation below minimum flow rate could subject tubes to frost pinching in the tube sheet, resulting in failure of the cooler.

Consult application data section in the Product Data literature and job design requirements to determine flow rate requirements for a particular installation.

OPERATION

Sequence of Operation — With a command to start the chiller, the cooler pump will start. After verifying water flow, the control will monitor the entering and leaving water temperature. At any time that a compressor is not operating, its crankcase heater is active. If the need for mechanical cooling is determined, the control decides which circuit and compressor to start. The compressor will deenergize the crankcase heater as it starts. Compressors will be staged with minimum load control (if equipped and configured) to maintain LWT set point.

Shutdown of each circuit under normal conditions occurs in increments, starting with the minimum load control (if equipped) and finishing with the last running compressor. Once minimum load control is disabled, one compressor is shut down. Eight seconds later the next compressor will shut down. The process will continue until all of the compressors are shut down. The EXV will close completely, 1 minute after the last compressor has shut down. There are several abnormal conditions that, if detected, will shut down the circuit immediately. In this case, minimum load control and all compressors are turned off *without* an 8-second interval between them. The cooler pump will remain ON for 20 seconds after the last compressor has been turned OFF.

Dual Chiller Sequence of Operation — With a command to start the chiller, the master chiller determines which chiller will become the lead chiller based on ***Configuration→RSET→LLBL*** and ***Configuration→ RSET→LLBD***. The lead chiller is always started first and the lag chiller is held at zero percent capacity by the master chiller forcing the lag demand limit value to 0%. The lead chiller's water pump will be started. The lag chiller's water pump shall be maintained off if ***Configuration→RSET→LAGP*=0**. The internal algorithm of lead chiller will control capacity of the lead chiller.

If Lead Pulldown Time (***Configuration→ RSET→LPUL***) has been configured, the lead chiller will continue to operate alone for that specified time. After the Lead Pulldown Time timer has elapsed, if the lead chiller is fully loaded and either all available compression is on or at the master demand limit value, then the lag start timer (***Configuration→RSET→ LLDY***) is initiated. When the pulldown timer and lag start timer have elapsed and the Combined Leaving Chilled Water Temperature is more than 3° F (1.7° C) above the set point, then the lag chiller is started.

Table 34 — Minimum and Maximum Cooler Flow Rates

SIZES 060-300

30RB SIZE	MINIMUM COOLER FLOW RATE (gpm)	MAXIMUM FLOW RATE (gpm)	MINIMUM LOOP VOLUME (gal.)	MINIMUM COOLER FLOW RATE (l/s)	MAXIMUM COOLER FLOW RATE (l/s)	MINIMUM LOOP VOLUME (liters)
060	72	288	180	5	18	681
070	84	336	210	5	21	795
080	96	384	240	6	24	908
090	108	432	270	7	27	1022
100	120	480	300	8	30	1136
110	132	528	330	8	33	1249
120	144	576	360	9	36	1363
130	156	624	390	10	39	1476
150	180	720	450	11	45	1703
160	192	768	480	12	48	1817
170	204	816	510	13	51	1931
190	228	912	570	14	58	2158
210	252	1008	630	16	64	2385
225	270	1080	675	17	68	2555
250	300	1200	750	19	76	2839
275	330	1320	825	21	83	3123
300	360	1440	900	23	91	3407

SIZES 315-390

30RB SIZE	MINIMUM COOLER FLOW RATE (gpm)		MAXIMUM COOLER FLOW RATE (gpm)		MIN LOOP VOLUME (gal.)	MINIMUM COOLER FLOW RATE (l/s)		MAXIMUM COOLER FLOW RATE (l/s)		MIN LOOP VOLUME (liters)
	Module A	Module B	Module A	Module B		Module A	Module B	Module A	Module B	
315	192	192	768	768	945	12	12	48	48	3577
330	192	204	768	816	990	12	13	48	51	3748
345	204	204	816	816	1035	13	13	51	51	3918
360	204	228	816	912	1080	13	14	51	58	4088
390	228	228	912	912	1170	14	14	58	58	4429

If the lag chiller's water pump was not started when the machines went into occupied mode, then the lag chiller water pump will be started. The lag chiller will start when the master chiller forcing the lag chiller demand limit value (LAG_LIM) to the master's demand limit value. If lead/lag capacity balance is selected, once the lag chiller has started, the master chiller will try to keep the difference in capacity between lead and lag to less than 20%. The master chiller will then be responsible for water loop capacity calculation, and will determine which chiller, the lead or lag, will increase or decrease capacity. When the load reduces, the lag chiller will unload first. To accomplish this, the lead chiller set point is decreased by 4° F (–2.2° C) until the lag chiller unloads.

To configure the two chillers for dual chiller operation, the master chiller must have the Control Method variable (***Operating Mode→ SLCT→OPER***) set to meet the job requirements. The slave chiller must be set to Control Method variable (***Operating Mode→ SLCT→OPER***) = **2** (CCN Control) and the remote-off-enable switch must be in the enable position. The master chiller and the slave chiller CCN addresses (***Configuration→ OPTN→CCNA***) must be configured. The master and slave chillers can be addressed from 1 to 239. Each device connected to the network must have its own unique address. Both chillers must have the same CCN Bus Number (***Configuration→OPTN→CCNB***). Lead/Lag Chiller Enable must be set for both chillers by configuring Master/Slave Select (***Configuration→RSET→ MSSL***) to **1** (Master) for the master chiller. The slave chiller Master/Slave Select must be set to **2** (Slave). The master chiller can be configured to use Lead/Lag Balance (***Configuration→ RSET→LLBL***) to rotate the lead and lag chillers after a configured number of hours of operation. The Lag Start Delay (***Configuration→RSET→LLBD***) can be configured. This prevents the Lag chiller from starting until the lead chiller is fully loaded and the delay has elapsed.

Operating Modes

MODE 1 (***Operating Mode→MODE→MD01***) — Startup Delay in Effect

Criteria for Mode — Tested when the unit is started. This mode is active when the Minutes Off Time (***Configuration→ OPTN→DELY***) timer is active.

Action Taken — The unit will not start until the timer has expired.

Termination — The mode will terminate when the timer expires.

Possible Causes — This mode is in effect only due to the Minutes Off Time timer.

MODE 2 (***Operating Mode→MODE→MD02***) — Second Setpoint in Use

Criteria for Mode — Tested when the unit is ON. This mode is active when Cooling Setpoint 2 (***Setpoints→COOL→ CSP.2***) or Ice Setpoint (***Setpoints→COOL→CSP.3***) is in use. While in this mode, the Active Setpoint (***Run Status →VIEW→SETP***) will show the ***CSP.2*** or ***CSP.3*** value.

Action Taken — The unit will operate to the Cooling Setpoint 2 (***CSP.2***) or Ice Setpoint (***CSP.3***).

Termination — This mode will terminate when the Cooling Setpoint 2 (***CSP.2***) or Ice Setpoint (***CSP.3***) is no longer in use.

Possible Causes — This mode is in effect only due to programming options.

MODE 3 (***Operating Mode→MODE→MD03***) — Reset in Effect

Criteria for Mode — Tested when the unit is ON. This mode is active when Temperature Reset (***Configuration→RSET→ CRST***) is enabled either by ***CRST*=1** (Outside Air Temperature), ***CRST*=2** (Return Water), ***CRST*=3** (4-20 mA Input), or ***CRST*=4** (Space Temperature) and is active.

Action Taken — The Active Setpoint (***Run Status→VIEW →SETP***) will be modified according to the programmed information and will be displayed as the Control Point (***Run Status→VIEW→CTPT***).

Termination — This mode will terminate when the Temperature Reset is not modifying the active leaving water set point, so ***SETP*** is the same as ***CTPT***.

Possible Causes — This mode is in effect only due to programming options.

MODE 4 (***Operating Mode→MODE→MD04***) — Demand Limit Active

Criteria for Mode — Tested when the unit is ON. This mode is active when Demand Limit (***Configuration→RSET→ DMDC***) is enabled either by ***DMDC*=1** (Switch), ***DMDC*=2** (4-20 mA Input) or the Night Time Low Sound Capacity Limit (***Configuration→OPTN →LS.LT***).

Action Taken — The Active Demand Limit Value (***Run Status→VIEW→LIM***) will display the current demand limit according to the programmed information and the unit's capacity will be reduced to the amount shown or lower.

Termination — This mode will terminate when the Demand Limit command has been removed.

Possible Causes — This mode is in effect when capacity is being limited by the demand limit function.

MODE 5 (***Operating Mode→MODE→MD05***) — Ramp Loading Active

Criteria for Mode — Tested when the unit is ON. This mode is active when Ramp Loading (***Configuration→OPTN →RL.S***) is enabled and the following conditions are met:

1. The leaving water temperature is more than 4° F (2.2° C) from the Control Point (***Run Status→VIEW→CTPT***), and
2. The rate of change of the leaving water temperature is greater than the Cool Ramp Loading (***Set Points→COOL→CRMP***).

Action Taken — The control will limit the capacity step increase until one of the two conditions in Mode 5 is no longer true.

Termination — This mode will terminate once both conditions in Mode 5 are no longer true.

Possible Causes — This mode is in effect only when capacity is being limited by the ramp loading function.

MODE 6 (***Operating Mode→MODE→MD06***) — Cooler Heater Active

Criteria for Mode — Tested when unit is ON or OFF. This mode is active when the cooler heater is energized, if the Outdoor Air Temperature (***Temperature→UNIT→OAT***) is less than the calculated value (Freeze Setpoint + Cooler Heater Delta T Setpoint [***Configuration→SERV→HTR***] default – 2° F [1.1° C]), and either the Leaving Water Temperature (***Temperature→UNIT→LWT***) or the Entering Water Temperature (***Temperature→UNIT→EWT***) are less than or equal to the Freeze Setpoint + Cooler Heater Delta T Setpoint (***HTR***).

The Freeze Setpoint is 34 F (1.1 C) for fresh water systems (***Configuration→SERV→FLUD*=1**). The Freeze Setpoint is the Brine Freeze Setpoint (***Configuration→SERV→LOSP***) for Medium Temperature Brine systems (***Configuration →SERV→FLUD*=2**).

Action Taken — The cooler heater will be energized.

Termination — The cooler heater will be deenergized when both the Entering Water Temperature (***EWT***) and Leaving Water Temperature (***LWT***) are above the Freeze Setpoint + Cooler Heater Delta T Setpoint (***HTR***).

Possible Causes — This mode will be enabled for freeze protection. If the temperatures are not as described above, check

the accuracy of the outside air, entering and leaving water thermistors.

MODE 7 (***Operating Mode→MODE→MD07***) — Water Pump Rotation

Criteria for Mode — Tested when the unit is ON or OFF. This mode is active when the Cooler Pump Sequence (***Configuration→OPTN→ PUMP)* =2** (2 Pumps Automatic Changeover) and the Pump Rotation Delta Timer (***Configuration→OPTN →ROT.P***) has expired.

Action Taken — The control will switch the operation of the pumps. The lead pump will be operating normally. The lag pump will be started, becoming the lead, and then the original lead pump will be shut down.

Termination — This mode will terminate when the pump operation has been completed.

Possible Causes — This mode is in effect only due to programming options.

MODE 8 (***Operating Mode→MODE→MD08***) — Pump Periodic Start

Criteria for Mode — This mode is active when the cooler pump is started for the Periodic Pump Start configuration (***Configuration→ OPTN→PM.PS*=YES**).

Action Taken — If the pump has not run that day, a pump will be started and will run for 2 seconds at 2:00 PM. If the machine is equipped with dual pumps, Pump no. 1 will run on even days (such as day 2, 4, 6 of the month). Pump no. 2 will run on odd days (such as day 1, 3, 5 of the month).

Termination — This mode will terminate when the pump shuts down.

Possible Causes — This mode is in effect only due to programming options.

MODE 9 (***Operating Mode→MODE→MD09***) — Night Low Noise Active

Criteria for Mode — This mode is active when the Night Time Low Noise Option has been configured and the time is within the configured time. Programming a Night Low Noise Start Time (***Configuration→OPTN→LS.ST***) and a Night Low Noise End Time (***Configuration→OPTN→LS.ND***) configures the option.

Action Taken — The control will raise the head pressure set point to reduce the number of condenser fans on, thereby reducing the sound of the machine. Additionally, if the Night Time Low Sound Capacity Limit (***Configuration→OPTN →LS.LT***) has been configured, the units capacity will be limited to the programmed level.

Termination — This mode will terminate once the Night Low Noise End Time (***LS.ND***) has been reached.

Possible Causes — This mode is in effect only due to programming options.

MODE 10 (***Operating Mode→MODE→MD10***) — System Manager Active

Criteria for Mode — Tested when the unit is ON or OFF. This mode is active if a System Manager such as Building Supervisor, Chillervisor System Manager, or another CCN device is controlling the machine.

Action Taken — The machine will respond to the specific command received from the System Manager.

Termination — The mode will be terminated if the System Manager control is released.

Possible Causes — This mode is in effect only due to programming options.

MODE 11 (***Operating Mode→MODE→MD11***) — Mast Slave Ctrl Active

Criteria for Mode — Tested if the machine is ON. This mode is active if the Master Slave Control has been enabled. Having 2 machines programmed, one as the master (***Configuration →RSET→MSSL=1*** [Master]) and the other as a slave (***Configuration→RSET→MSSL=2*** [Slave]).

Action Taken — Both the master and slave machine will respond to the capacity control commands issued by the master controller. This may include control point changes and demand limit commands.

Termination — This mode will terminate when the Master Slave Control has been disabled.

Possible Causes — This mode is in effect only due to programming options.

MODE 12 (***Operating Mode→MODE→MD12***) — Auto Changeover Active

Criteria for Mode — This mode is not supported for Cooling Only units.

Action Taken — None.

Termination — None.

Possible Causes — This mode is in effect only due to programming options.

MODE 13 (***Operating Mode→MODE→MD13***) — Free Cooling Active

Criteria for Mode — This mode is not supported for Cooling Only units.

Action Taken — None.

Termination — None.

Possible Causes — This mode is in effect only due to programming options.

MODE 14 (***Operating Mode→MODE→MD14***) — Reclaim Active

Criteria for Mode — This mode is not supported for Cooling Only units.

Action Taken — None.

Termination — None.

Possible Causes — This mode is in effect only due to programming options.

MODE 15 (***Operating Mode→MODE→MD15***) — Electric Heat Active

Criteria for Mode — This mode is not supported for Cooling Only units.

Action Taken — None.

Termination — None.

Possible Causes — This mode is in effect only due to programming options.

MODE 16 (***Operating Mode→MODE→MD16***) — Heating Low EWT Lockout

Criteria for Mode — This mode is not supported for Cooling Only units.

Action Taken — None.

Termination — None.

Possible Causes — This mode is in effect only due to programming options.

MODE 17 (***Operating Mode→MODE→MD17***) — Boiler Active

Criteria for Mode — This mode is not supported for Cooling Only units.

Action Taken — None.

Termination — None.

Possible Causes — This mode is in effect only due to programming options.

MODE 18 (***Operating Mode→MODE→MD18***) — Ice Mode in Effect

Criteria for Mode — Tested when the unit is ON. This mode is active when Ice Setpoint (***Setpoints→COOL→CSP.3***) is in use. While in this mode, the Active Setpoint (***Run Status →VIEW→SETP***) will show the ***CSP.3*** value.

Action Taken — The unit will operate to the Ice Setpoint (***CSP.3***).

Termination — This mode will terminate when the Ice Setpoint (***CSP.3***) is no longer in use.

Possible Causes — This mode is in effect only due to programming options.

MODE 19 ***Operating Mode→MODE→MD19***) — Defrost Active on Cir A

MODE 20 (***Operating Mode→MODE→MD20***) — Defrost Active on Cir B

Criteria for Mode — This mode is not supported for Cooling Only units.

Action Taken — None.

Termination — None.

Possible Causes — This mode is in effect only due to programming options.

MODE 21 (***Operating Mode→MODE→MD21***) — Low Suction Circuit A

MODE 22 (***Operating Mode→MODE→MD22***) — Low Suction Circuit B

MODE 23 (***Operating Mode→MODE→MD23***) — Low Suction Circuit C

Criteria for Mode — The criteria are tested when the circuit is ON. The appropriate circuit mode will be active if one of the following conditions is true:

1. If the circuit's Saturated Suction Temperature (SST) is more than 6° F (3.3° C) less than the freeze point and both the cooler approach (Leaving Water Temperature-SST) and superheat (Suction Gas Temperature – SST) are greater than 15° F (8.3° C).
2. If there is more than 1 compressor ON in the circuit and the circuit's SST is greater than 18° F (10.0° C) below the freeze point for more than 90 seconds.
3. If there is more than 1 compressor ON in the circuit and the circuit's SST is greater than –4° F (–20.0° C) and the SST 30 seconds ago was 18° F (10.0° C) below the freeze point.
4. If the circuit's saturated suction temperature is greater than 6° F (3.3° C) below the freeze point for more than 3 minutes.

For a fresh water system (***Configuration→SERV→FLUD*** **=1**), the freeze point is 34° F (1.1° C). For medium temperature brine systems, (***Configuration→SERV→FLUD*****=2**), the freeze point is Brine Freeze Set Point (***Configuration→SERV→ LOSP***).

Action Taken — For criterion 1, no additional stages will be added. For criteria 2, 3 and 4, one stage of capacity will be removed.

Termination — The mode will terminate when the circuit's Saturated Suction Temperature is greater than the freeze point minus 6° F (3.3° C) or the circuit has alarmed.

Possible Causes — If this condition is encountered, see Possible Causes for Alarms P.05, P.06, and P.07 on page 67.

MODE 24 (***Operating Mode→MODE→MD24***) — High DGT Circuit A

MODE 25 (***Operating Mode→MODE→MD25***) — High DGT Circuit B

MODE 26 (***Operating Mode→MODE→MD26***) — High DGT Circuit C

Criteria for Mode — This mode is tested for when any circuit is running. The circuit saturated condensing and suction temperatures are monitored to ensure that the compressors always operate withing their allowed "map." Operation at conditions at or outside the "map" boundaries will cause this mode to be in effect. Operation at extremely low suction pressures and high condensing temperatures will cause the mode to be generated.

Action Taken — The circuit will not be allowed to increase capacity and may be automatically unloaded or stopped.

Termination — This mode will terminate when or if the circuit refrigerant conditions return to within the compressor "map."

Possible Causes — This mode could be in effect due to a low fluid flow rate, overcharge of oil in a circuit, dirty condenser coils, refrigerant overcharge, or excessive brine concentration.

MODE 27 (***Operating Mode→MODE→MD27***) — High Pres Override Cir A

MODE 28 (***Operating Mode→MODE→MD28***) — High Pres Override Cir B

MODE 29 (***Operating Mode→MODE→MD29***) — High Pres Override Cir C

Criteria for Mode — Tested when the circuit is ON. The appropriate circuit mode will be active if the discharge pressure for the circuit, Discharge Pressure Circuit A (***Pressure →PRC.A→DP.A***), Discharge Pressure Circuit B (***Pressure→PRC.B→DP.B***), or Discharge Pressure Circuit C (***Pressure→PRC.C→DP.C***) is greater than the High Pressure Threshold (***Configuration→SERV→HP.TH***).

Action Taken — The capacity of the affected circuit will be reduced. If the unit is equipped with Minimum Load Control and has been configured for High Ambient (***Configuration →UNIT→HGBP*****=3**), the minimum load control valve will be energized. Two minutes following the capacity reduction, the circuit's saturated condensing temperature (SCT) is calculated and stored. The affected circuit will not be allowed to add capacity for at least 5 minutes following the capacity reduction. If after 5 minutes, the circuit's saturated condensing temperature is less than SCT – 3° F (1.7° C), if required, another stage of capacity will be added.

If additional steps of capacity are required, the control will look for other circuits to add capacity.

Termination — This mode will terminate once the circuit's saturated condensing temperature is less than SCT – 3° F (1.7° C).

Possible Causes — If this condition is encountered, see Possible Causes for Alarm A1.03. on page 64.

MODE 30 (***Operating Mode→MODE→MD30***) — Low Superheat Circuit A

MODE 31 (***Operating Mode→MODE→MD31***) — Low Superheat Circuit B

MODE 32 (***Operating Mode→MODE→MD32***) — Low Superheat Circuit C

Criteria for Mode — Tested when the circuit is ON with at least 1 compressor ON. The appropriate circuit mode will be active is the circuit's superheat is less than 5° F (2.8° C).

Action Taken — No additional stages of circuit capacity will be added until the circuit's superheat is greater than 5° F (2.8° C).

The control will look for other circuits to add capacity if additional steps of capacity are required.

Termination — This mode will terminate once the affected circuit's superheat is greater than 5° F (2.8° C).

Possible Causes — If this condition is encountered, see Possible Causes for Alarms P.11, P.12 and P.13 on page 67.

Optional Heat Reclaim Module — For chillers with the heat reclaim option, ***Configuration→UNIT→RECL*** should be set to YES from the factory.

This option requires the installation of an additional board. This is the same board as used for energy management module (EMM).

This board allows control of:

- a heat reclaim condenser pump
- a heat reclaim condenser heater
- solenoid valves to shut off the normal cooling coil (one, two or three for each circuit, depending on the unit size)
- two solenoid drain valves for the heat reclaim coil (one for each circuit)
- two solenoid valves to shut off the water condenser (one for each circuit)
- two solenoid drain valves for the water condenser (one for each circuit).

For more control details, refer to the unit low voltage control schematic.

Selecting the heat reclaim mode can be done with either the local interface or remotely with the (***RECL_SW***) contact or by CCN. For remote connection, Position 14 and 15 on terminal block 7 should be used to switch to air cooled (open) or heat reclaim mode (closed). The ***RECL_SW*** contact can be accessed through (***Input→GEN.I→RECL***).

In local mode, the reclaim select must be set to "Switch Control" (***Operating mode→RL.SE*** = **Switch Ctrl**).

In CCN mode, the reclaim select must be set to YES (***Operating mode→RL.SE*** = **YES**).

The heat reclaim function becomes active when the heat reclaim entering water temperature is lower than the heat reclaim setpoint (***Setpoints→MISC→RSP***), minus half or quarter of the heat reclaim dead band (***Setpoints→MISC→RDB***). The default heat reclaim dead band is 8° F and the recommended dead band range is 5 to 20° F.

The difference between the reclaim entering water temperature and reclaim set point will determine if one or two circuits are required to provide heat reclaim capacity. See Table 35 for details.

Table 35 — Heat Reclaim Circuits

HEAT RECLAIM ENTERING WATER TEMPERATURE	NO. OF CIRCUITS IN RECLAIM		
	START UP	hr_ewt>rsp+hr_deadb/4	hr_ewt>rsp+hr_deadb/2
hr_ewt < *rsp-hr_deadb*/2	Two	One	Zero
rsp-hr_deadb/2<*hr_ewt* < *rsp-hr_deadb*/4	One	One	Zero

The heat reclaim function is not active when the heat reclaim entering water temperature is higher than the heat reclaim set point, plus half of the heat reclaim dead band.

Heat reclaim active mode is indicated by ***MODE_14*** = 1. Mode_14 can be accessed through CCN.

The following is the changeover procedure from cooling mode to heat reclaim mode. First is the start-up of the condenser pump. Then, verification of the condenser flow switch control contact. If this remains open after one minute of condenser pump operation, the circuit remains in cooling mode and an alarm will be activated. The control will then wait until the difference between saturated condensing temperature and saturated suction temperature is higher than 10° F. When this occurs, the pumpdown sequence is activated.

During pumpdown, the control will open the water condenser inlet valve and close the air condenser air valves 3 seconds later. After one minute or when the subcooling value is above 13.2° F, the heat reclaim operation is effective.

Heat reclaim entering water temperature (***HEWT***), leaving water temperature (***HLWT***), heat reclaim pump hours (***HR.CD***), refrigerant sub-cooling (***hr_subcx***) can be can be accessed through following paths:

Temperature→HEWT

Temperature→HLWT

Run Status→RUN→HR.CD

Temperature→CIR.A→HRS.A

Temperature→CIR.B→HRS.B

RECLAIM CONDENSER WATER VALVE OUTPUT — This output (0 to 10 Vdc) is used to control heat reclaim condenser 3-way water valve position through a variable speed device.

The 3-way valve should be installed to facilitate the cold water start-up (below 59 F) and maintain a stable head pressure control during heat reclaim operation. The minimum position of the water valve should be set at 20% and maximum position should be set at 100%.

When the entering water temperature is below 68 F, the water valve should remain at 20% position to allow a maximum re-circulating of the warm water between the 3-way water valve and heat reclaim condenser.

When the entering water temperature is above 104 F, the water valve will remain fully open, allowing no recirculation of the warm water.

When the entering water temperature is between 68 F and 104 F, the water valve will be adjusted between 20% and 100% position in linear proportion to the value of the entering water temperature.

SERVICE

Electronic Expansion Valve (EXV) — See Fig. 25 for a cutaway view of the EXV. High-pressure liquid refrigerant enters valve through the top. As refrigerant passes through the orifice, pressure drops and refrigerant changes to a 2-phase condition (liquid and vapor). The electronic expansion valve operates through an electronically controlled activation of a stepper motor. The stepper motor stays in position, unless power pulses initiate the two discrete sets of motor stator windings for rotation in either direction. The direction depends on the phase relationship of the power pulses.

The motor directly operates the spindle, which has rotating movements that are transformed into linear motion by the transmission in the cage assembly. The valve cone is a V-port type which includes a positive shut-off when closed.

There are two different EXVs. For circuits with 1 or 2 compressors, the total number of steps is 2785. For circuits with 3 or 4 compressors, the total number of steps is 3690. The EXV motor moves at 150 steps per second. Commanding the valve to either 0% or 100% will add extra 160 steps to the move, to ensure the value is open or closed completely.

The EXV board controls the valve. Each circuit has a thermistor located in a well in the suction manifold before the compressor. Suction pressure as measured by the suction pressure transducer is converted to a saturated suction temperature. The thermistor measures the temperature of the superheated gas entering the compressor and the pressure transducer determines the saturated temperature of suction gas. The difference between the temperature of the superheated gas and the saturated suction temperature is the superheat. The EXV board controls the position of the electronic expansion valve stepper motor to maintain superheat set point.

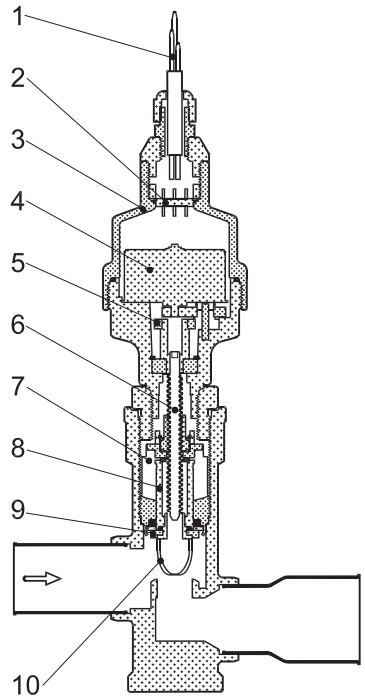

1. Cable
2. Glass Seal
3. Motor Housing
4. Stepper Motor
5. Bearing
6. Lead Screw
7. Insert
8. Valve Piston
9. Valve Seat
10. Valve Port

Fig. 25 — Cutaway View of the Electronic Expansion Valve

The MBB controls the superheat leaving cooler to approximately 9.0° F (5.0° C). Because EXV status is communicated to the main base board (MBB) and is controlled by the EXV boards, it is possible to track the valve position. The unit is then protected against loss of charge and a faulty valve. During initial start-up, the EXV is fully closed. After initialization period, valve position is tracked by the EXV board by constantly monitoring the amount of valve movement.

The EXV is also used to limit cooler saturated suction temperature to 50 F (10 C). This makes it possible for the chiller to start at higher cooler fluid temperatures without overloading the compressor. This is commonly referred to as MOP (maximum operating pressure).

If it appears that the EXV module is not properly controlling circuit operation to maintain correct superheat, there are a number of checks that can be made using test functions and initialization features built into the microprocessor control. See the EXV Troubleshooting Procedure section to test EXVs.

EXV TROUBLESHOOTING PROCEDURE — Follow the steps below to diagnose and correct EXV problems. Check EXV motor operation first. Switch the Enable/Off/Remote (EOR) Contact switch to the Off position. Press ESCAPE on the scrolling marquee until the highest operating level is displayed. Use the arrow keys to select the Service Test mode and press ENTER . The display will be **TEST**. Use the arrow keys until display shows **QUIC**. Press ENTER (password entry may be required) and use ▲ or ▼ to change **OFF** to **ON**. The Quick Test sub-mode is now enabled. Move the arrow down to the appropriate circuit EXV, Circuit A EXV % Open (***Service Test Mode→QUIC→EXV.A***), Circuit B EXV % Open (***Service Test Mode→QUIC→EXV.B***), or Circuit C EXV % Open (***Service Test Mode→QUIC→ EXV.C***), and press ENTER. The current value of **0** will be displayed.

Press ENTER and the value will be flashing. Using the ▲ increase the EXV position to select 100% valve position (hold ▲ for quick movement) and press ENTER. The actuator should be felt moving through the EXV. Press ENTER again twice if necessary to confirm this has occurred. This will attempt to force the EXV to 100% again. To close the valve, press ENTER, select 0% with ▼ and press ENTER. The actuator should knock when it reaches the bottom of its stroke. If it is believed that the valve is not working properly, continue with the following test procedure:

Check the 8-position DIP switch on the board for the proper address. Check the EXV output signals at appropriate terminals on the EXV module. Connect positive test lead to EXV-J2A terminal 5 for sizes 060-190 or EXV1-J2A terminal 5 for sizes 210-300 for Circuit A. Connect lead to EXV-J2B terminal 5 for sizes 060-190 or EXV1-J2B terminal 5 for sizes 210-300 for Circuit B. Connect lead to EXV2-J2A terminal 5 for sizes 210-300 for Circuit C. Set meter to approximately 20 vdc. Using the Service Test procedure above, move the valve output under test to 100%. DO NOT short meter leads together or pin 5 to any other pin, as board damage will occur. During the next several seconds, carefully connect the negative test lead to pins 1,2,3 and 4 in succession. Digital voltmeters will average this signal and display approximately 6 vdc. If the output remains at a constant voltage other than 6 vdc or shows 0 volts, remove the connector to the valve and recheck.

Press ENTER and select 0% to close the valve. If a problem still exists, replace the EXV board. If the reading is correct, the expansion valve and EXV wiring should be checked. Check the EXV connector and interconnecting wiring.

1. Check color-coding and wire connections. Make sure they are connected to the correct terminals at the EXV board and EXV plug and that the cables are not crossed.
2. Check for continuity and tight connection at all pin terminals.

Check the resistance of the EXV motor windings. Remove the EXV module plug. Module plug is labeled EXV-J2A on sizes 060-190 or EXV1-J2A on sizes 210-300 for Circuit A, EXV-J2B for sizes 060-190 or EXV1-J2B for sizes 210-300 for Circuit B, or EXV2-J2A on sizes 210-300 for Circuit C.

Check the resistance of the two windings between pins 1 and 3 for one winding and pins 2 and 4 for the other winding. The resistance should be 52 ohms (± 5.2 ohms).

Inspecting/Opening Electronic Expansion Valves

> IMPORTANT: Obtain replacement gaskets before opening EXV. Do not re-use gaskets.

To check the physical operation of an EXV, the following steps must be performed.

1. Close the liquid line shut off valve of the circuit to be checked. Put the Enable/Off/Remote Contact switch in the Off position. Using the scrolling marquee, enter the Service Test mode and change ***Service Test→TEST →T.REQ*** from **OFF** to **ON**. A password may be required. Switch the EOR switch to the Enable position. Under the COMP sub-mode, enable the one of the compressors (***Service Test→TEST→CP.xn***) for the circuit. Let compressor run until gage on suction pressure port reads 10 psig. Press ENTER, ▼ and ENTER to turn the compressor off. The compressor will turn off. Immediately after the compressor shuts off, close the discharge valve.
2. Remove any remaining refrigerant from the system low side using proper reclaiming techniques. Turn off the line voltage power supply to the compressors.
3. The expansion valve motor is hermetically sealed inside the top portion of the valve. See Fig. 26. Carefully unscrew the $1^1/_{16}$ in. (27 mm) retaining nut securing the motor portion to the body of the valve making sure the EXV plug is still connected. The EXV operator will come out with the motor portion of the device.
4. Enter the appropriate EXV test step under the (***Service Test→QUIC***) sub-mode in the Service Test mode. Locate the desired item ***Service Test→QUIC→EXV.A***, ***Service Test→QUIC→EXV.B***, or ***Service Test→QUIC →EXV.C***. Press ENTER twice to make the valve position of 0% flash. Press and hold ▲ until 100% is displayed and press ENTER. Observe the operation of the lead screw. See Fig. 25. The motor should be turning, raising the operator closer to the motor. Motor actuator movement should be smooth and uniform from fully closed to fully open position. Press ENTER twice, use ▼ to select 0% and press ENTER again to check open to closed operation. If the valve is properly connected to the processor and receiving correct signals, yet does not operate as described above, the sealed motor portion of the valve should be replaced.

Installing EXV Motor

> IMPORTANT: Obtain replacement gasket before opening EXV. Do not re-use gaskets.

If re-installing the motor, be sure to use a new gasket in the assembly. See Fig. 26. It is easier to install the motor assembly with the lead screw in the fully closed position. Using the steps outlined above, move the EXV position to 0. Insert the motor into the body of the EXV. Tighten the motor to the body to 36 ft-lb (50 N-m) and then tighten the valve another 30 degrees.

Moisture Liquid Indicator — Clear flow of liquid refrigerant indicates sufficient charge in system. Bubbles in the sight glass indicate undercharged system or presence of noncondensables. Moisture in system measured in parts per million (ppm), changes color of indicator. See Table 36. Change filter drier at first sign of moisture in system.

Table 36 — Moisture Liquid Indicator

REFRIGERANT R-410A	AT 75 F (24 C) (ppm)	AT 125 F (52 C) (ppm)
Green — Dry	<20	<60
Yellow-green — Caution	20 to 165	60 to 500
Yellow — Wet	>165	>500

> IMPORTANT: Unit must be in operation at least 12 hours before moisture indicator can give an accurate reading.
>
> With unit running, indicating element must be in contact with liquid refrigerant to give true reading.

Filter Drier — Whenever moisture-liquid indicator shows presence of moisture, replace filter drier(s). There is one filter drier on each circuit. Refer to Carrier Standard Service Techniques Manual, Chapter 1, Refrigerants, for details on servicing filter driers.

Liquid Line Service Valve — This valve is located immediately ahead of filter drier, and has a $^1/_4$-in. Schrader connection for field charging. In combination with compressor discharge service valve, each circuit can be pumped down into the high side for servicing except on units equipped with MCHX condenser coils.

Cooler

FREEZE PROTECTION — Coolers can be ordered with heaters installed in the factory. If equipped, the main base board based on the outdoor-air temperature and the entering and leaving water thermistors controls the cooler heaters. The Heater Set Point is the sum of the freeze point and Cooler Heater DT Setp (***Configuration→SERV→HTR***).

If the entering or leaving water temperature is less than the Heater Set Point and the outdoor air temperature is less than the Heater Set Point – 2° F (1.1° C), then the heater will be turned on.

If the Entering or Leaving Water Temperature is less than the Brine Freeze Setpoint (***Configuration→SERV→LOSP***) + 1.0° F (0.5° C), then the heater will be turned on along with the pump.

Entire cooler is covered with closed-cell insulation applied over the heater. Heater plus insulation protect cooler against low ambient temperature freeze-up to –20 F (–28 C).

> IMPORTANT: If unit is installed in an area where ambient temperatures fall below 32 F (0° C), it is recommended that a suitable corrosion-inhibited anti-freeze solution be used in chilled water circuit.

LOW FLUID TEMPERATURE — Main base board is programmed to shut chiller down if leaving fluid temperature drops below 34 F (1.1 C) for water or below Brine Freeze Setpoint (***Configuration→SERV→LOSP***) for brine units. The unit will shut down without a pumpout. When fluid temperature rises to 6° F (3.3° C) above the leaving fluid set point, safety resets and chiller restarts. Reset is automatic as long as this is the first occurrence.

LOSS OF FLUID FLOW PROTECTION — All 30RB machines include an integral flow switch that protects the chiller against loss of cooler flow.

TUBE PLUGGING — A leaky tube can be plugged until retubing can be done. The number of tubes plugged determines how soon the cooler *must* be retubed. If several tubes require

plugging, check with a local Carrier representative to find out how the number and location of tubes can affect unit capacity. Fig. 27 shows an Elliott tube plug and a cross-sectional view of a plug in place. See Tables 37 and 38 for plug components.

⚠ CAUTION

Use extreme care when installing plugs to prevent damage to the tube sheet section between the holes.

Table 37 — Plug Component Part Numbers

COMPONENTS FOR PLUGGING	PART NUMBER
For Tubes	
Brass Pin	853103-312*
Brass Ring	853002-322*
For Holes without tubes	
Brass Pin	853103-375
Brass Ring	853002-377
Loctite	No. 675 †
Locquic	"N" †

*Order directly from Elliot Tube Company, Dayton, OH or RCD.
†Can be obtained locally.

Table 38 — Plug Component Dimensions

PLUG COMPONENT	SIZE	
	in.	mm
Tube sheet hole diameter	0.377-0.382	9.58-9.70
Tube OD	0.373-0.377	9.47-9.58
Tube ID after rolling (includes expansion due to clearance.)	0.328	8.33

NOTE: Tubes next to gasket webs must be flush with tube sheet (both ends).

For the 30RB150-390 coolers, the pass partition has a perforated distribution plate in the inlet pass to more uniformly distribute the refrigerant as it enters the first pass tubes of the cooler. The perforated distribution plate is on the tubesheet side of the pass partition. A tube plug in a first pass tube will interfere with the installation of pass partition. The tube plug must be flush with the tube sheet to prevent this interference. The pass partition is symmetrical, meaning the partition plate can be rotated 180 degrees, however, the performance of the machine will be affected if the pass partition is installed incorrectly.

RETUBING — When retubing is required, obtain service of qualified personnel experienced in boiler maintenance and repair. Most standard procedures can be followed when retubing the coolers. An 8% crush is recommended when rolling replacement tubes into the tubesheet.

The following Elliott Co. tube rolling tools are required:
- Expander Assembly
- Cage
- Mandrel
- Rolls

Place one drop of Loctite No. 675 or equivalent on top of tube prior to rolling. This material is intended to "wick" into the area of the tube that is not rolled into the tube sheet, and prevent fluid from accumulating between the tube and the tube sheet.

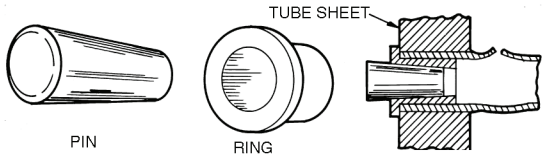

Fig. 27 — Elliott Tube Plug

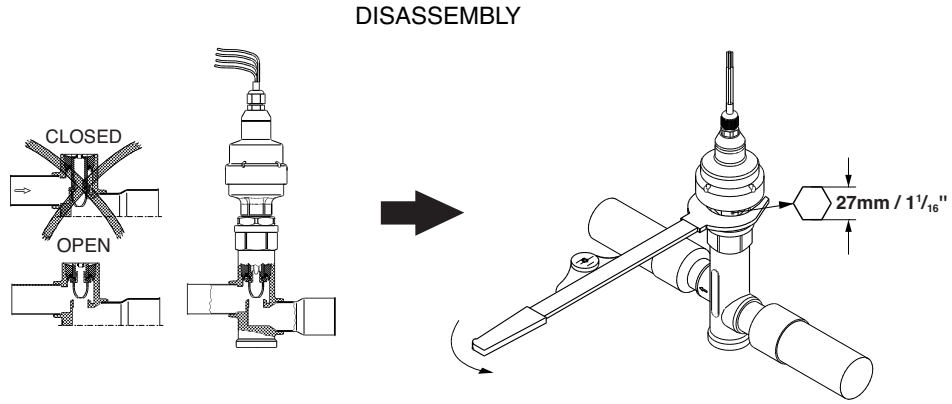

NOTE: Open valve in Quick Test sub-mode before disassembling.

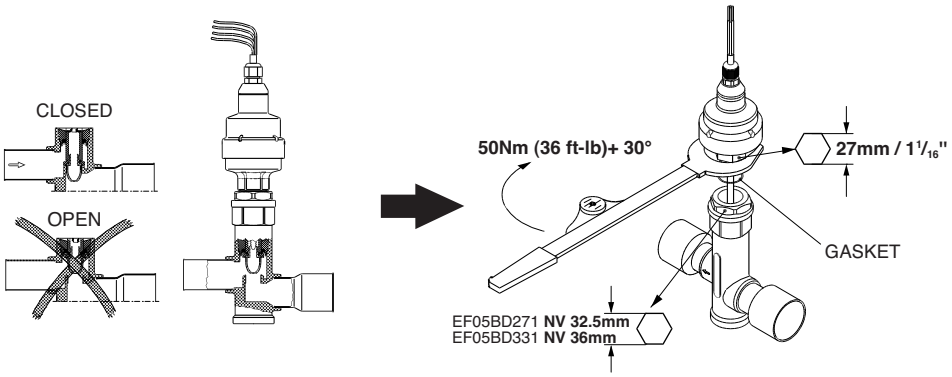

NOTES:
1. Push down on valve piston to close valve before assembling.
2. After valve is assembled close valve in Quick Test sub-mode or cycle power before opening service valve.

Fig. 26 — Disassembly and Assembly of EXV Motor

TIGHTENING COOLER HEAD BOLTS (Fig. 28-32)

Gasket Preparation — When reassembling cooler heads, always use new gaskets. Gaskets are neoprene-based and are brushed with a light film of compressor oil. *Do not soak gasket or gasket deterioration will result*. Use new gaskets within 30 minutes to prevent deterioration. Reassemble cooler nozzle end or plain end cover of the cooler with the gaskets. Torque all cooler bolts to the following specification and sequence:

$^5/_8$-in. Diameter Perimeter Bolts (Grade 5). . . . 150 to 170 ft-lb (201 to 228 N-m)

$^1/_2$-in. Diameter Flange Bolts (Grade 5) . . . . . 70 to 90 ft-lb (94 to 121 N-m)

$^1/_2$-in. Diameter Center Stud (Grade 5). . . . . 70 to 90 ft-lb (94 to 121 N-m)

1. Install all bolts finger tight, except for the suction flange bolts. Installing these flanges will interfere with tightening the center stud nuts.
2. Bolt tightening sequence is outlined in Fig. 27-31. Follow the numbering or lettering sequence so that pressure is evenly applied to gasket.
3. Apply torque in one-third steps until required torque is reached. Load *all* bolts to each one-third step before proceeding to next one-third step.
4. No less than one hour later, retighten all bolts to required torque values.
5. After refrigerant is restored to system, check for refrigerant leaks using recommended industry practices.
6. Replace cooler insulation.

CHILLED WATER FLOW SWITCH — A factory-installed flow switch is installed in the cooler nozzle for all machines. This is a thermal-dispersion flow switch with no field adjustments. The switch is set for approximately 0.5 ft/sec flow. See Table 39 for unit flow rate information.

Table 39 — Unit Flow Rates

UNIT SIZE 30RB	COOLER CONNECTION SIZE (in.)	MINIMUM FLOW - WATER (GPM)	MINIMUM FLOW - 40% EG (GPM)
060-100	4	20	53
110-300	6	44	117
315-390	6	44 (per module)	117 (per module)

The sensor tip houses two thermistors and a heater element. One thermistor is located in the sensor tip, closest to the flowing fluid. This thermistor is used to detect changes in the flow velocity of the liquid. The second thermistor is bonded to the cylindrical wall and is affected only by changes in the temperature of the liquid. The thermistors are positioned to be in close contact with the wall of the sensor probe and, at the same time, to be kept separated from each other within the confines of the probe.

In order to sense flow, it is necessary to heat one of the thermistors in the probe. When power is applied, the tip of the probe is heated. As the fluid starts to flow, heat will be carried away from the sensor tip. Cooling of the first thermistor is a function of how fast heat is conducted away by the flowing liquid. The difference in temperature between the two thermistors provides a measurement of fluid velocity past the sensor probe. When fluid velocity is high, more heat will be carried away from the heated thermistor and the temperature differential will be small. As fluid velocity decreases, less heat will be taken from the heated thermistor and there will be an increase in temperature differential.

When unit flow rate is above the minimum flow rate, then the output is switched on, sending 24 vac through a 560 ohm dropping resistor. This provides 12 vac to the MBB to prove flow has been established.

For recommended maintenance, check the sensor tip for build-up every 6 months. Clean the tip with a soft cloth. If necessary, build-up (e.g., lime) can be removed with a common vinegar cleansing agent.

RTPF (Round Tube Plate Fin) Condenser Coil Maintenance and Cleaning Recommendations — Routine cleaning of coil surfaces is essential to maintain proper operation of the unit. Elimination of contamination and removal of harmful residues will greatly increase the life of the coil and extend the life of the unit. The following maintenance and cleaning procedures are recommended as part of the routine maintenance activities to extend the life of the coil.

REMOVE SURFACE LOADED FIBERS — Surface loaded fibers or dirt should be removed with a vacuum cleaner. If a vacuum cleaner is not available, a soft non-metallic bristle brush may be used. In either case, the tool should be applied in the direction of the fins. Coil surfaces can be easily damaged (fin edges can be easily bent over and damage to the coating of a protected coil) if the tool is applied across the fins.

NOTE: Use of a water stream, such as a garden hose, against a surface loaded coil will drive the fibers and dirt into the coil. This will make cleaning efforts more difficult. Surface loaded fibers must be completely removed prior to using low velocity clean water rinse.

PERIODIC CLEAN WATER RINSE — A periodic clean water rinse is very beneficial for coils that are applied in coastal or industrial environments. However, it is very important that the water rinse is made with very low velocity water stream to avoid damaging the fin edges. Monthly cleaning as described below is recommended.

ROUTINE CLEANING OF COIL SURFACES — Monthly cleaning with Totaline® environmentally sound coil cleaner is essential to extend the life of coils. This cleaner is available from Carrier Replacement parts division as part number P902-0301 for a one gallon container, and part number P902-0305 for a 5 gallon container. It is recommended that all coils, including the standard copper tube aluminum fin, precoated fin, copper fin, or E-coated coils be cleaned with the Totaline environmentally sound coil cleaner as described below. Coil cleaning should be part of the unit's regularly scheduled maintenance procedures to ensure long life of the coil. Failure to clean the coils may result in reduced durability in the environment.

Avoid the use of:
- coil brighteners
- acid cleaning prior to painting
- high pressure washers
- poor quality water for cleaning

Totaline environmentally sound coil cleaner is non-flammable, hypoallergenic, nonbacterial, and a USDA accepted biodegradable agent that will not harm the coil or surrounding components such as electrical wiring, painted metal surfaces, or insulation. Use of non-recommended coil cleaners is strongly discouraged since coil and unit durability could be affected.

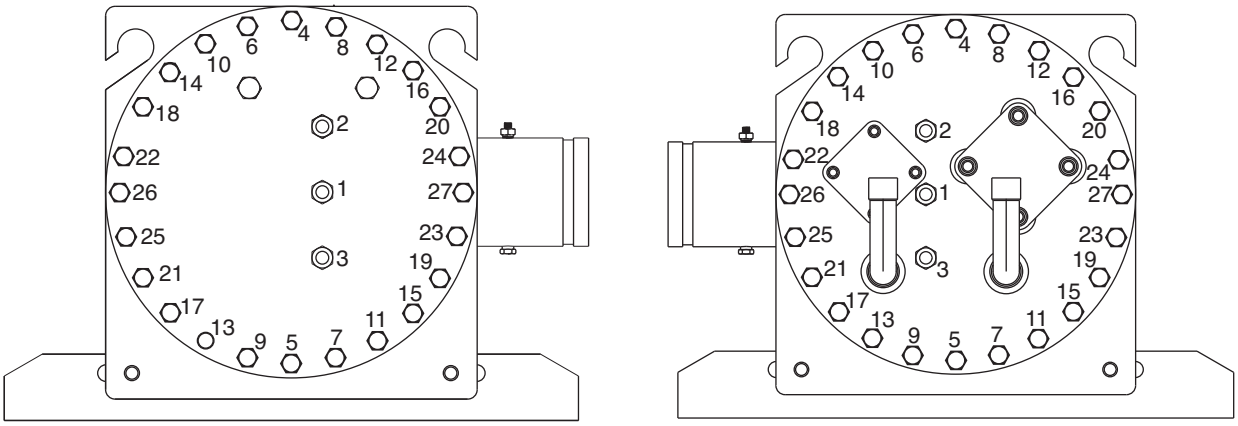

Fig. 28 — Bolt Tightening Sequence, 30RB060,070

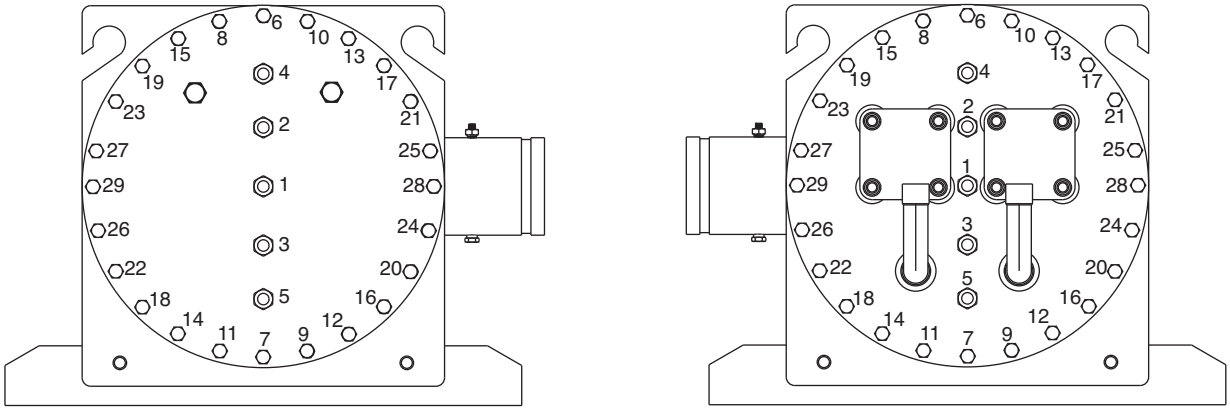

Fig. 29 — Bolt Tightening Sequence, 30RB080-100

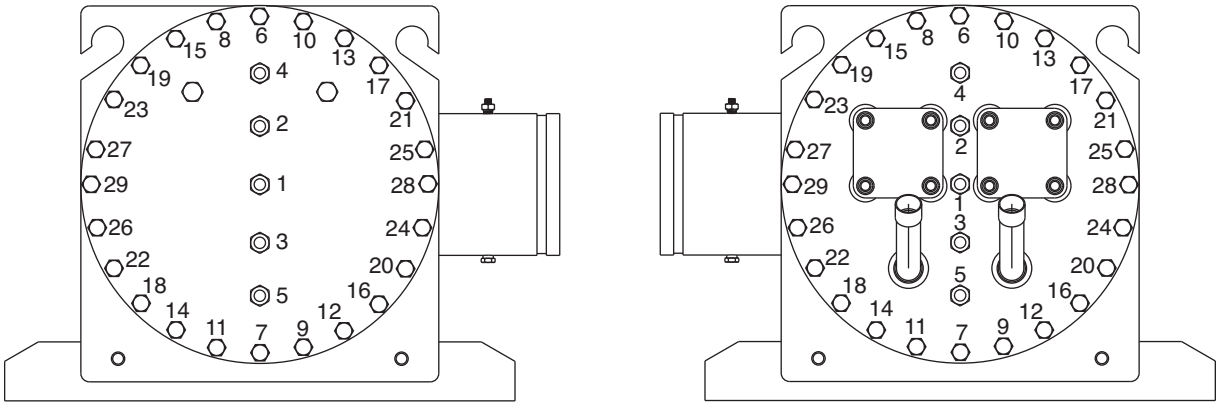

Fig. 30 — Bolt Tightening Sequence, 30RB110-130

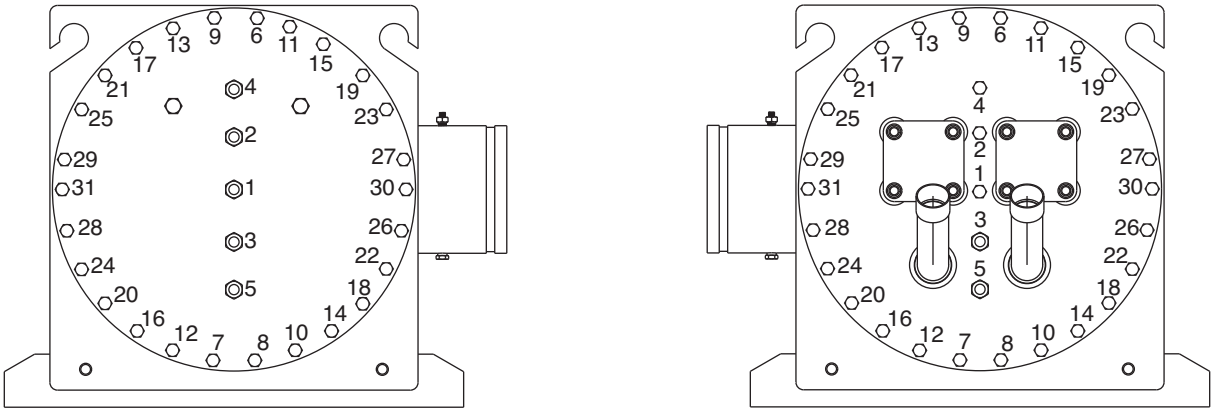

Fig. 31 — Bolt Tightening Sequence, 30RB150-190, 315A/B, 345A/B, 360A/B, 390A/B

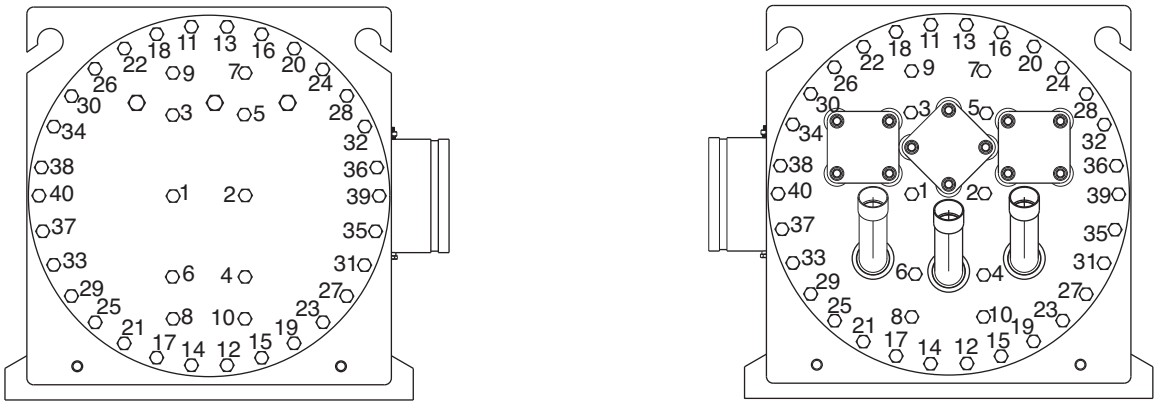

Fig. 32 — Bolt Tightening Sequence, 30RB210-300

Totaline Environmentally Sound Coil Cleaner Application Equipment

- $2^1/_2$ gallon garden sprayer
- water rinse with low velocity spray nozzle.

⚠ CAUTION

Harsh chemicals, household bleach or acid or basic cleaners should not be used to clean outdoor or indoor coils of any kind. These cleaners can be very difficult to rinse out of the coil and can accelerate corrosion at the fin/tube interface where dissimilar materials are in contact. If there is dirt below the surface of the coil, use the Totaline® environmentally sound coil cleaner as described on page 53.

⚠ CAUTION

High velocity water from a pressure washer, garden hose, or compressed air should never be used to clean a coil. The force of the water or air jet will bend the fin edges and increase airside pressure drop. Reduced unit performance or nuisance unit shutdown may occur.

Totaline Environmentally Sound Coil Cleaner Application Instructions

1. Remove any foreign objects or debris attached to the coil face or trapped within the mounting frame or brackets.
2. Put on personal protective equipment including safety glasses and/or face shield, waterproof clothing and gloves. It is recommended to use full coverage clothing.
3. Remove all surface loaded fibers and dirt with a vacuum cleaner as described above.
4. Thoroughly wet finned surfaces with clean water and a low velocity garden hose, being careful not to bend fins.
5. Mix Totaline environmentally sound coil cleaner in a $2^1/_2$ gallon garden sprayer according to the instructions included with the cleaner. The optimum solution temperature is 100 F.

NOTE: Do NOT USE water in excess of 130 F, as the enzymatic activity will be destroyed.

6. Thoroughly apply Totaline environmentally sound coil cleaner solution to all coil surfaces including finned area, tube sheets and coil headers.
7. Hold garden sprayer nozzle close to finned areas and apply cleaner with a vertical, up-and-down motion. Avoid spraying in horizontal pattern to minimize potential for fin damage.
8. Ensure cleaner thoroughly penetrates deep into finned areas.
9. Interior and exterior finned areas must be thoroughly cleaned.
10. Finned surfaces should remain wet with cleaning solution for 10 minutes.
11. Ensure surfaces are not allowed to dry before rinsing. Reapplying cleaner as needed to ensure 10-minute saturation is achieved.
12. Thoroughly rinse all surfaces with low velocity clean water using downward rinsing motion of water spray nozzle. Protect fins from damage from the spray nozzle.

MCHX (Microchannel Heat Exchanger) Condenser Coil Maintenance and Cleaning Recommendations — Routine cleaning of coil surfaces is essential to maintain proper operation of the unit. Elimination of contamination and removal of harmful residues will greatly increase the life of the coil and extend the life of the unit. The following steps should be taken to clean MCHX condenser coils:

⚠ CAUTION

Do not apply any chemical cleaners to MCHX condenser coils. These cleaners can accelerate corrosion and damage the coil.

1. Remove any foreign objects or debris attached to the coil face or trapped within the mounting frame and brackets.
2. Put on personal protective equipment including safety glasses and/or face shield, waterproof clothing and gloves. It is recommended to use full coverage clothing.
3. Start high pressure water sprayer and purge any soap or industrial cleaners from sprayer before cleaning condenser coils. Only clean potable water is authorized for cleaning condenser coils.
4. Clean condenser face by spraying the coil steady and uniformly from top to bottom while directing the spray straight toward the coil. Do not exceed 900 psig or 30 degree angle. The nozzle must be at least 12 in. from the coil face. Reduce pressure and use caution to prevent damage to air centers.

⚠ CAUTION

Excessive water pressure will fracture the braze between air centers and refrigerant tubes.

Condenser Fans — A formed metal mount bolted to the fan deck supports each fan and motor assembly. A shroud and a wire guard provide protection from the rotating fan. The exposed end of fan motor shaft is protected from weather by

grease. If fan motor must be removed for service or replacement, be sure to regrease fan shaft and reinstall fan guard. The fan motor has a step in the motor shaft. For proper performance, fan should be positioned such that it is securely seated on this step. Tighten the bolt to 12 to 15 ft-lb (16 to 20 N-m).

> IMPORTANT: Check for proper fan rotation (counterclockwise viewed from above). If necessary, switch any 2 power leads to reverse fan rotation.

Refrigerant Circuit

LEAK TESTING — Units are shipped with complete operating charge of refrigerant R-410A (see Physical Data tables supplied in the 30RB Installation Instructions) and should be under sufficient pressure to conduct a leak test. If there is no pressure in the system, introduce enough nitrogen to search for the leak. Repair the leak using good refrigeration practices. After leaks are repaired, system must be evacuated and dehydrated.

REFRIGERANT CHARGE — Refer to Physical Data tables supplied in the 30RB Installation Instructions). Immediately ahead of filter drier in each circuit is a factory-installed liquid line service valve. Each filter drier has a $^1/_4$-in. Schrader connection for charging liquid refrigerant.

Charging with Unit Off and Evacuated — Close liquid line service valve before charging. Weigh in charge shown on unit nameplate. Open liquid line service valve; start unit and allow it to run several minutes fully loaded. Check for a clear sight glass. Be sure clear condition is liquid and not vapor.

Charging with Unit Running — If charge is to be added while unit is operating, all condenser fans and compressors must be operating. It may be necessary to block condenser coils at low ambient temperatures to raise condensing pressure to approximately 450 psig (3102 kPa) to turn all condenser fans on. Do not totally block a coil to do this. Partially block all coils in uniform pattern. Charge each circuit until sight glass shows clear liquid, and has a liquid line temperature of 103 F (39 C).

> IMPORTANT: When adjusting refrigerant charge, circulate fluid through cooler continuously to prevent freezing and possible damage to the cooler. Do not overcharge, and never charge liquid into the low-pressure side of system.

Safety Devices — Chillers contain many safety devices and protection logic built into electronic control. Following is a brief summary of major safeties.

COMPRESSOR PROTECTION

Circuit Breaker — Each compressor is equipped with one molded case circuit breaker to provide short circuit protection. Do not bypass or increase size of a breaker to correct problems. Determine cause for trouble and correct before resetting breaker. Circuit breaker current rating is listed on individual circuit breakers.

A high-pressure switch with a trip pressure of 641 psig (4419 kPa) is mounted on the discharge line of each circuit. Switch is wired in series with the SPM modules of all compressors in the circuit. If switch opens, the SPM opens all compressor contactors in the circuit and all compressors are locked off. See the table below for high pressure switch protection.

DEVICE	CUT-OUT	CUT-IN
High Pressure Switch	641 ± 10 psi (4420 ± 70 kPa)	493 ± 29 psi (3400 ± 200 kPa)

CRANKCASE HEATERS — Each compressor has a 56-w crankcase heater to prevent absorption of liquid refrigerant by oil in crankcase when compressor is not running. Heater power source is control power transformer.

> IMPORTANT: Never open any switch or disconnect that deenergizes crankcase heaters unless unit is being serviced or is to be shut down for a prolonged period. After a prolonged shutdown or service, energize crankcase heaters for 24 hours before starting unit.

Relief Devices — Fusible plugs are located in each circuit to protect against damage from excessive pressures.

HIGH-SIDE PROTECTION — One device is located between condenser and filter drier; a second is on filter drier.

These are both designed to relieve pressure on a temperature rise to approximately 210 F (99 C).

LOW-SIDE PROTECTION — A device is located on suction line and is designed to relieve pressure on a temperature rise to approximately 170 F (77 C).

Some local building codes require that relieved gases be removed. This connection will allow conformance to this requirement.

Compressors

> **⚠ WARNING**
>
> Do not supply power to unit with compressor cover removed. Failure to follow this warning can cause a fire resulting in personal injury or death.

> **⚠ WARNING**
>
> Exercise extreme caution when reading compressor currents when high-voltage power is on. Correct any of the problems described below before installing and running a replacement compressor. Wear safety glasses and gloves when handling refrigerants. Failure to follow this warning can cause a fire, resulting personal injury or death.

> **⚠ CAUTION**
>
> Do not manually operate contactors. Serious damage to the machine may result.

COMPRESSOR REPLACEMENT — To change out a faulty compressor, refer to the compressor replacement procedure included with the new compressor.

OIL CHARGE — All units are factory charged with polyol ester (POE) oil to $^7/_8$ sight glass. Acceptable oil level for each compressor is $^3/_4$ to $^7/_8$ full in the sight glass.

> **⚠ CAUTION**
>
> The compressor in a Puron® system uses a polyol ester (POE) oil. This oil is extremely hygroscopic, meaning it absorbs water readily. POE oils can absorb 15 times as much water as other oils designed for HCFC and CFC refrigerants. Take all necessary precautions to avoid exposure of the oil to the atmosphere.

When additional oil or a complete charge is required it must meet the following specifications:

- Manufacturer . . . . . .ICI Emkarate RL 32H
- Oil Type. . . . . Inhibited polyol ester-based synthetic compressor lubricant.
- ISO Viscosity Grade 32

Do not reuse drained oil or any oil that has been exposed to the atmosphere.

SYSTEM BURNOUT CLEANUP PROCEDURE — Some compressor electrical failures can cause the motor to burn. When this occurs, byproducts such as sludge, carbon, and acids contaminate the system. There are 2 classifications of motor burnouts, mild and severe. Test the oil for acidity using a POE oil acid test kit to determine the severity of the burnout.

In a mild burnout, there is little or no detectable odor. Compressor oil is clear or slightly discolored. An acid test of the oil will be negative. This type of failure is treated the same as a mechanical failure. The liquid line filter drier or core should be replaced.

In a severe burnout, there is a strong, pungent, rotten egg odor. Compressor oil is very dark. Evidence of burning may be present in the tubing connected to the compressor. An acid test of the oil will be positive. The following steps should be taken before restarting any compressors in the circuit.

1. Isolate compressors and recover refrigerant from compressor section.
2. Remove oil from all compressors in the circuit. An oil drain plug is provided on each compressor. Pressurize the low side of the compressor circuit with nitrogen. Less than 10 psig (68.9 kPa) should be adequate. This will help in the removal of the oil from the compressor sump. Dispose of contaminated oil as per local codes and regulations.
3. Replace failed compressor as outlined under compressor replacement procedure.
4. Recharge the circuit with fresh oil. The circuit oil charge information is supplied in the 30RB Installation Instructions. Oil level should be approximately $^{7}/_{8}$ sight glass.
5. Install activated carbon (burnout) filter drier/core.
6. Leak check, evacuate and recharge refrigerant circuit.
7. Operate compressors. Check filter drier pressure drop periodically. Replace cores if pressure drop exceeds 4 psig (27.6 kPa).

Perform additional acid test after 24 hours of operation. Change liquid line filter drier/core if necessary. Replace with standard filter drier/core once circuit is clean. Use the Carrier Standard Service Techniques Manual as a reference source.

MAINTENANCE

Recommended Maintenance Schedule — The following are only recommended guidelines. Jobsite conditions may dictate that maintenance schedule is performed more often than recommended.

Routine:

For machines with e-coat condenser coils:
- Periodic clean water rinse, especially in coastal and industrial applications.

Every month:
- Check condenser coils for debris, clean as necessary following recommended guidelines.
- Check moisture indicating sight glass for possible refrigerant loss and presence of moisture.

Every 3 months (for all machines):
- Check refrigerant charge.
- Check all refrigerant joints and valves for refrigerant leaks, repair as necessary.
- Check chilled water flow switch operation.
- Check condenser coils for debris, clean as necessary following recommended guidelines.
- Check sight glass moisture indicator for moisture.
- Check all condenser fans for proper operation.
- Check compressor oil level.
- Check crankcase heater operation.
- Inspect pump seal, if equipped with a hydronic pump package.

Every 12 months (for all machines):
- Check all electrical connections, tighten as necessary.
- Inspect all contactors and relays, replace as necessary.
- Check accuracy of thermistors, replace if greater than ±2° F (1.2° C) variance from calibrated thermometer.
- Check accuracy of transducers, replace if greater than ±5 psi (34.47 kPa) variance.
- Check to be sure that the proper concentration of antifreeze is present in the chilled water loop, if applicable.
- Verify that the chilled water loop is properly treated.
- Check refrigerant filter driers for excessive pressure drop, replace as necessary.
- Check chilled water strainers, clean as necessary.
- Check cooler heater operation, if equipped.
- Check pump heater operation, if equipped.
- Check condition of condenser fan blades and that they are securely fastened to the motor shaft.
- Perform Service Test to confirm operation of all components.

Check for excessive cooler approach (Leaving Chilled Water Temperature – Saturated Suction Temperature) which may indicate fouling. Clean cooler vessel if necessary.

TROUBLESHOOTING

See Table 40 for an abbreviated list of symptoms, possible causes and possible remedies.

Alarms and Alerts — The integral control system constantly monitors the unit and generates warnings when abnormal or fault conditions occur. Alarms may cause either a circuit (Alert) or the whole machine (Alarm) to shutdown. Alarms and Alerts are assigned codes as described in Fig. 33. The alarm/alert indicator LED on the scrolling marquee or Navigator™ module is illuminated when any alarm or alert condition is present. If an Alert is active, the Alarm Indicator LED will blink. If an Alarm is active, the Alarm Indicator LED will remain on. Currently active Alerts and Alarms can be found in ***Alarms→ALRM→ALM1*** to ***ALM5***.

The controller generates two types of alarms. Automatic reset alarms will reset without any intervention if the condition that caused the alarm corrects itself. Manual reset alarms require the service technician to check for the alarm cause and reset the alarm. The following method must be followed to reset manual alarms:

Before resetting any alarm, first determine the cause of the alarm and correct it. Enter the Alarms mode indicated by the LED on the side of the scrolling marquee display. Press ENTER and sub-mode ***Alarm→R.ALM*** (Reset All Current Alarms) is displayed. Press ENTER . The control will prompt the user for a password, by displaying PASS and WORD. Press ENTER to display 1111. Press ENTER for each character. The default password is 0111. Use the arrow keys to change each individual character. Use the up or down arrow keys to toggle the display to **YES** and press ENTER . The alarms will be reset. Indicator light will be turned off when switched correctly. Do not reset the chiller at random without first investigating and correcting the cause(s) of the failure.

Each alarm is described by a three or four-digit code. The first one or two digits indicate the alarm source and are listed below. The last two digits pinpoint the problem. See Table 41.

Table 40 — Troubleshooting

SYMPTOM	POSSIBLE CAUSE	POSSIBLE REMEDY
Unit Does Not Run	Check for power to unit	• Check overcurrent protection device. • Check non-fused disconnect (if equipped). • Restore power to unit.
	Low refrigerant charge	Check for leak and add refrigerant.
	Wrong or incorrect unit configuration	Check unit configuration.
	Active alarm	Check Alarm status. See separate Alarm and follow troubleshooting instructions.
	Active operating mode	Check for Operating Modes. See Operating Modes and follow trouble-shooting instructions. Check capacity control overrides.
Unit Operates too Long or Continuously	Low refrigerant charge	Check for leak and add refrigerant.
	Compressor or control contacts welded	Replace contactor or relay.
	Air in chilled water loop	Purge water loop.
	Non-condensables in refrigerant circuit.	Remove refrigerant and recharge.
	Inoperative EXV	• Check EXV, clean or replace. • Check EXV cable, replace if necessary. • Check EXV board for output signal.
Circuit Does Not Run	Active alarm	Check Alarm status. See separate Alarm and follow troubleshooting instructions.
	Active operating mode	Check for Operating Modes. See Operating Modes and follow trouble-shooting instructions.
Circuit Does Not Load	Active alarm	Check Alarm status. See separate Alarm and follow troubleshooting instructions.
	Active operating mode	Check for Operating Modes. See Operating Modes and follow trouble-shooting instructions.
	Low saturated suction temperature	See Operating Modes 21, 22 and 23.
	High circuit suction superheat	The circuit capacity is not allowed increase if circuit superheat is greater than 36 F (20 C). See Alarms P.08, P.09 and P.10 for potential causes.
	Low suction superheat	The circuit capacity is not allowed to increase if the circuit superheat is less than 5 F (2.8 C). See Alarms P.11, P.12 and P.13 for potential causes.
Compressor Does Not Run	Active alarm	Check Alarm status. See separate Alarm and follow troubleshooting instructions.
	Active operating mode	Check for Operating Modes. See Operating Modes and follow trouble-shooting instructions.
	Inoperative compressor contactor	• Check control wiring. • Check scroll protection module. • Check contactor operation, replace if necessary.
Chilled Water Pump is ON, but the Machine is OFF	Cooler freeze protection	Chilled water loop temperature too low. Check cooler heater.

Table 41 — Alarm Codes

PREFIX CODE	SUFFIX CODE	DESCRIPTION	REASON FOR ALARM	ACTION TAKEN BY CONTROL	RESET TYPE	PROBABLE CAUSE
A1 A2 A3 A4 B1 B2 B3 B4 C1 C2 C3 C4	**.01**	Compressor nn Motor Temperature Too High	Compressor Motor Sensor PTC resistance is greater than 4.5k Ω.	Circuit shut down or not allowed to start	Manual	Compressor failure, wiring error, operation outside of limits, improper refrigerant charge
	.02	Compressor nn Crankcase Heater Failure	Crankcase heater current not detected when required or detected when not required.	Circuit shut down or not allowed to start	Manual	Wiring error, failed crankcase heater, failed SPM.
	.03	Compressor nn High Pressure Switch	High Pressure Switch open.	Circuit shut down or not allowed to start	Manual	Wiring error, closed/ restricted discharge valve, improper refrigerant charge, dirty condenser coils, failed outdoor fan motor, discharge pressure transducer inaccuracy
	.04	Compressor nn Motor Sensor PTC Out of Range	Compressor Motor Sensor PTC resistance is less than 50 Ω or greater than 17k Ω.	Circuit shut down or not allowed to start	Manual	Wiring error, operation outside of limits, com-pressor failure, improper refrigerant charge
	.05	Compressor nn Power Reset	24-VAC power lost to SPM board.	Compressor shut down or not allowed to start	Automatic	Low voltage from main power supply.
	.06	Compressor nn Low Control Voltage Alert	24-VAC power to SPM board too low.	Compressor shut down or not allowed to start	Automatic	Low voltage from main power supply.

See legend on page 59.

Table 41 — Alarm Codes (cont)

PREFIX CODE	SUFFIX CODE	DESCRIPTION	REASON FOR ALARM	ACTION TAKEN BY CONTROL	RESET TYPE	PROBABLE CAUSE
Co	.A1	Loss of Communication with Compressor Board A1	No communication with SPM	Affected compressor is shut down	Automatic	Wrong SPM address, wrong unit configuration, wiring error, power loss to SPM.
	.A2	Loss of Communication with Compressor Board A2				
	.A3	Loss of Communication with Compressor Board A3				
	.A4	Loss of Communication with Compressor Board A4				
	.B1	Loss of Communication with Compressor Board B1				
	.B2	Loss of Communication with Compressor Board B2				
	.B3	Loss of Communication with Compressor Board B3				
	.B4	Loss of Communication with Compressor Board B4				
	.C1	Loss of Communication with Compressor Board C1				
	.C2	Loss of Communication with Compressor Board C2				
	.C3	Loss of Communication with Compressor Board C3				
	.C4	Loss of Communication with Compressor Board C4				
	.E1	Loss of Communication with EXV Board Number 1	No communication with EXV1	Circuit A & B shut down or not allowed to start	Automatic	Wrong module address, wrong unit configuration, wiring error, power loss to module
	.E2	Loss of Communication with EXV Board Number 2	No communication with EXV2	Circuit C shut down or not allowed to start		
	.F1	Loss of Communication with Fan Board Number 1	No communication with Fan Board 1	Circuit A & B shut down or not allowed to start (060-150, 210-250) Circuit A shut down or not allowed to start (160-190, 275-300)	Automatic	Wrong module address, wrong unit configuration, wiring error, power loss to module
	.F2	Loss of Communication with Fan Board Number 2	No communication with Fan Board 2	Circuit B shut down or not allowed to start (160-190, 275-300)		
	.F3	Loss of Communication with Fan Board Number 3	No communication with Fan Board 3	Circuit C shut down or not allowed to start (210-300)		
	.O1	Loss of Communication with Free Cooling Board	No communication with Free Cooling Board	None	Automatic	Configuration error.
	.O2	Loss of Communication with Electrical Heaters Board	No communication with Electrical Heaters Board			
	.O3	Loss of Communication with Energy Management Board	No communication with Energy Management Board	Disable or not allow EMM Functions (3-Step and 4-20 mA Demand Limit, 4-20 mA and Space Temperature Reset, Occupancy Override, and Ice Build)	Automatic	Wrong module address, wrong unit configuration, wiring error, power loss to module
	.O4	Loss of Communication with Heat Reclaim Board	No communication with Heat Reclaim Board	Unit shall return to the standard air cooled mode	Automatic	Wrong module address, wrong unit configuration, wiring error, power loss to module

LEGEND

EMM — Energy Management Module
EWT — Entering Water Temperature
EXV — Electronic Expansion Valve
HR — Heat Reclaim
LWT — Leaving Water Temperature
MOP — Maximum Operating Pressure
OAT — Outdoor Air Temperature
PTC — Positive Temperature Coefficient
SCT — Saturated Condensing Temperature
SPM — Scroll Protection Module
SST — Saturated Suction Temperature

Table 41 — Alarm Codes (cont)

PREFIX CODE	SUFFIX CODE	DESCRIPTION	REASON FOR ALARM	ACTION TAKEN BY CONTROL	RESET TYPE	PROBABLE CAUSE
Ct	.01	Circuit A Welded Contactor Failure	Controls determine compressor is still running when circuit should be off	EXV, fan control, and pump operate as normal to save compressor until high pressure, freeze, or flow failure condiions occur	Manual	One or more circuit compressor contactors welded closed.
	.02	Circuit B Welded Contactor Failure	Controls determine compressor is still running when circuit should be off	EXV, fan control, and pump operate as normal to save compressor until high pressure, freeze, or flow failure condiions occur	Manual	One or more circuit compressor contactors welded closed.
	.03	Circuit C Welded Contactor Failure	Controls determine compressor is still running when circuit should be off	EXV, fan control, and pump operate as normal to save compressor until high pressure, freeze, or flow failure condiions occur	Manual	One or more circuit compressor contactors welded closed.
FC	.n0	Initial Factory Configuration Required	No configuration	Unit not allowed to start	Automatic	Configuration error. Password may default to 0113.
	.nn	Illegal Configuration	Wrong or incompatible configuration data	Unit not allowed to start	Automatic	Configuration error.
MC	.nn	Master Chiller Configuration Error	Wrong or incompatible configuration data	Unit not allowed to start in Master-Slave Control	Automatic	Configuration error. Refer to Table 43.
P	.01	Water Exchanger Freeze Protection	Entering or Leaving Thermistor sensed a temperature at or below freeze point.	Unit shut down or not allowed to start. Chilled Water Pump will be started	Automatic, first occurrence in 24 hours, Manual, if multiple alarms within 24 hours	Faulty thermistor, faulty wiring, low water flow rate, low loop volume, or freeze conditions.
	.05	Circuit A Low Suction Temperature	Low Saturated Suction Temperatures sensed for a period of time.	Circuit shut down	Automatic, first occurrence in 24 hours, Manual, if multiple alarms within 24 hours	Faulty transducer, faulty wiring, low water flow rate, low loop volume, fouled cooler, or freeze conditions.
	.06	Circuit B Low Suction Temperature				
	.07	Circuit C Low Suction Temperature				
	.08	Circuit A High Superheat	EXV>98%, Suction Superheat >54 F (30.0 C) and SST<MOP for more than 5 minutes	Circuit shut down	Manual	Faulty transducer, faulty thermistor, faulty wiring, faulty EXV, low refrigerant charge, plugged or restricted liquid line.
	.09	Circuit B High Superheat				
	.10	Circuit C High Superheat				
	.11	Circuit A Low Superheat	EXV ≤5% and Suction Superheat is less than the superheat setting by at least 5 F (2.8 C) or SST>Maximum Operating Pressure for more than 5 minutes	Circuit shut down	Automatic, first occurrence in 24 hours, Manual, if multiple alarms within 24 hours	Faulty transducer, faulty thermistor, faulty wiring, faulty EXV, or incorrect configuration.
	.12	Circuit B Low Superheat				
	.13	Circuit C Low Superheat				
	.14	Cooler Interlock Failure	Cooler Pump Interlock circuit opens (consists of chilled water flow system and chilled water pump interlock)	Unit shut down or not allowed to start	Automatic if stage=0, Manual if stage>0.	Low Water Flow, faulty wiring or contacts, faulty water flow switch, or chilled water pump problem. Remote lockout if unit is equipped with an EMM.

LEGEND

EMM — Energy Management Module
EWT — Entering Water Temperature
EXV — Electronic Expansion Valve
HR — Heat Reclaim
LWT — Leaving Water Temperature
MOP — Maximum Operating Pressure
OAT — Outdoor Air Temperature
PTC — Positive Temperature Coefficient
SCT — Saturated Condensing Temperature
SPM — Scroll Protection Module
SST — Saturated Suction Temperature

Table 41 — Alarm Codes (cont)

PREFIX CODE	SUFFIX CODE	DESCRIPTION	REASON FOR ALARM	ACTION TAKEN BY CONTROL	RESET TYPE	PROBABLE CAUSE
P	.15	Condenser Flow Switch Failure	—	None	Manual	Configuration error.
	.16	Compressor A1 Not Started or Pressure not Established	Compressor differential (Discharge-Suction) did not increase by 10 psig (69 kPa) in 2 minutes	Circuit shut down	Manual	No power to the compressor, faulty compressor contactor, low control voltage, faulty discharge or suction pressure transducers, wiring error, improper electrical phasing.
	.17	Compressor A2 Not Started or Pressure not Established				
	.18	Compressor A3 Not Started or Pressure not Established				
	.19	Compressor A4 Not Started or Pressure not Established				
	.20	Compressor B1 Not Started or Pressure not Established				
	.21	Compressor B2 Not Started or Pressure not Established				
	.22	Compressor B3 Not Started or Pressure not Established				
	.23	Compressor B4 Not Started or Pressure not Established				
	.24	Compressor C1 Not Started or Pressure not Established				
	.25	Compressor C2 Not Started or Pressure not Established				
	.26	Compressor C3 Not Started or Pressure not Established				
	.27	Compressor C4 Not Started or Pressure not Established				
	.28	Electrical Box Thermostat Failure	Improper phasing detected by the reverse rotation board	Unit not allowed to start	Automatic	Check power phasing, improper wiring, or faulty detection board.
	.29	Loss of Communication with System Manager	Loss of communication with an external control device for more than 2 minutes	Unit changes to stand alone operation	Automatic	Faulty communication wiring, no power supply to the external controller.
	.30	Master/Slave Communication Failure	Communication between the master and slave machines has been lost.	Units operate as stand alone machines	Automatic	Faulty communication wiring, no power or control power to the main base board to either module.
	.31	Unit is in Emergency Stop	Emergency Stop command has been received.	Unit shuts down or not allowed to start.	Automatic	Carrier Comfort Network® Emergency Stop Command received.
	.32	Cooler Pump 1 Fault	Pump Interlock status does not match pump status.	Unit shuts down. If available, another pump will start.	Manual	Faulty contacts, wiring error, or low control voltage.
	.33	Cooler Pump 2 Fault				
	.34	Circuit A Reclaim Operation Failure	Circuit A Reclaim Operation Failure	Reclaim operation failure due to high SCT	The affected circuit shall return to air cooled mode	Manual
	.35	Circuit B Reclaim Operation Failure	Circuit B Reclaim Operation Failure			
	.37	Circuit A Repeated High Discharge Gas Overrides	Multiple capacity overrides due to high saturated discharge temperatures	Circuit shut down	Automatic	Condenser air recirculation, dirty or plugged condenser coils, inaccurate discharge transducer, faulty condenser fan,
	.38	Circuit B Repeated High Discharge Gas Overrides				
	.39	Circuit C Repeated High Discharge Gas Overrides				
	.40	Circuit A Repeated Low Suction Temperature Overrides	Multiple capacity overrides due to low saturated suction temperatures	Circuit shut down	Manual	Low water flow, low loop volume, fouled cooler, low refrigerant charge, unit not configured for brine with glycol in cooler.
	.41	Circuit B Repeated Low Suction Temperature Overrides				
	.42	Circuit C Repeated Low Suction Temperature Overrides				
	.97	Water Exchanger Temperature Sensors Swapped	Control detects EWT below LWT for 1 minute	Unit shuts down	Manual	Wiring error. EWT and LWT sensors swapped.

LEGEND

EMM — Energy Management Module
EWT — Entering Water Temperature
EXV — Electronic Expansion Valve
HR — Heat Reclaim
LWT — Leaving Water Temperature
MOP — Maximum Operating Pressure
OAT — Outdoor Air Temperature
PTC — Positive Temperature Coefficient
SCT — Saturated Condensing Temperature
SPM — Scroll Protection Module
SST — Saturated Suction Temperature

Table 41 — Alarm Codes (cont)

PREFIX CODE	SUFFIX CODE	DESCRIPTION	REASON FOR ALARM	ACTION TAKEN BY CONTROL	RESET TYPE	PROBABLE CAUSE
Pr	.01	Circuit A Discharge Transducer	Measured voltage is 0 vdc	Circuit shut down or not allowed to start.	Automatic	Faulty transducer, wiring error, failed Main Base Board or Fan Board 3. Compressor circuit breaker tripped.
	.02	Circuit B Discharge Transducer				
	.03	Circuit C Discharge Transducer				
	.04	Circuit A Suction Transducer				
	.05	Circuit B Suction Transducer				
	.06	Circuit C Suction Transducer				
	.07	Circuit A Reclaim Pumpdown Pressure Transducer		The affected circuit shall return to air cooled mode	Automatic	Faulty transducer, wiring error, failed EMM HR board.
	.08	Circuit B Reclaim Pumpdown Pressure Transducer				
Sr	.nn	Service Maintenance Alert	Field programmed elapsed time has expired for maintenance item	None	Manual	Maintenance required (see Table 44).
th	.01	Water Exchanger Entering Fluid Thermistor Failure	Temperature measured by the controller is less than -40 F (-40 C) or greater than 240 F (115.6 C)	Unit will be shut down or not allowed to start.	Automatic	Faulty thermistor, wiring error, failed Main Base Board.
	.02	Water Exchanger Leaving Fluid Thermistor Failure				
	.03	Circuit A Defrost Thermistor Failure		None	Automatic	Configuration error.
	.04	Circuit B Defrost Thermistor Failure				
	.08	Reclaim Condenser Entering Thermistor		Unit shall return to the standard air cooled mode.	Automatic	Faulty thermistor, wiring error, failed EMM HR board.
	.09	Reclaim Condenser Leaving Thermistor		None		
	.10	OAT Thermistor Failure		Unit is shut down or not allowed to start. Cooler/ Pump heaters are energized	Automatic	Faulty thermistor, wiring error, failed Main Base Board.
	.11	Master/Slave Common Fluid Thermistor		Dual Chiller deactivated. Master and Slave machines operate in stand alone mode		
	.12	Circuit A Suction Gas Thermistor	Temperature measured by the controller is less than -40 F (-40 C) or greater than 240 F (115.6 C)	Circuit shut down	Automatic	Faulty thermistor, wiring error, failed Main Base Board or EXV Board
	.13	Circuit B Suction Gas Thermistor		Circuit shut down		
	.14	Circuit C Suction Gas Thermistor		Circuit shut down		
	.18	Circuit A Condenser Subcooling Liquid Thermistor		Unit shall return to the standard air cooled mode.	Automatic	Faulty thermistor, wiring error, failed EMM HR board.
	.19	Circuit B Condenser Subcooling Liquid Thermistor				
	.21	Space Temperature Sensor Failure		Temperature Reset based on Space Temperature disabled		Faulty thermistor, wiring error, failed Main Base Board.

LEGEND

EMM — Energy Management Module
EWT — Entering Water Temperature
EXV — Electronic Expansion Valve
HR — Heat Reclaim
LWT — Leaving Water Temperature
MOP — Maximum Operating Pressure
OAT — Outdoor Air Temperature
PTC — Positive Temperature Coefficient
SCT — Saturated Condensing Temperature
SPM — Scroll Protection Module
SST — Saturated Suction Temperature

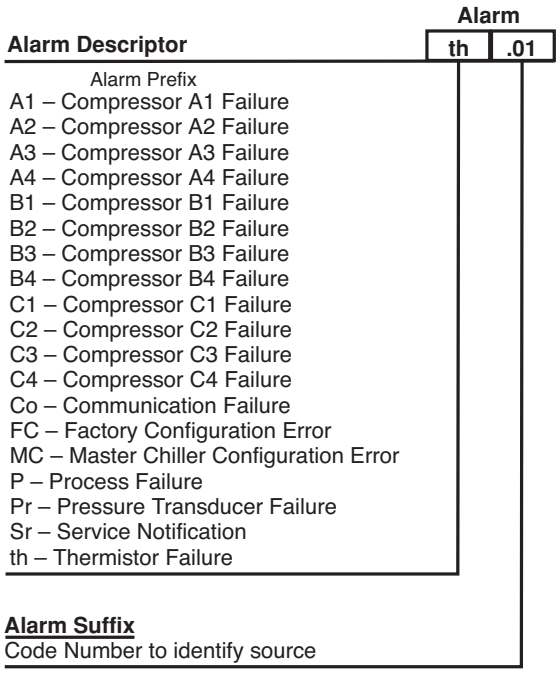

Fig. 33 — Alarm Description

DIAGNOSTIC ALARM CODES AND POSSIBLE CAUSES

Motor Temperature Too High

A1.01 — Compressor A1
A2.01 — Compressor A2
A3.01 — Compressor A3
A4.01 — Compressor A4
B1.01 — Compressor B1
B2.01 — Compressor B2
B3.01 — Compressor B3
B4.01 — Compressor B4
C1.01 — Compressor C1
C2.01 — Compressor C2
C3.01 — Compressor C3
C4.01 — Compressor C4

Criteria for Trip — The alarm criterion is checked whether the compressor is ON or OFF. This alarm will be generated if the scroll protection module (SPM) detects a compressor motor PTC (positive temperature coefficient) resistance greater than 4.5 kΩ, indicating that the motor temperature is too high.

Action to be Taken — The circuit shuts down immediately or is not allowed to start.

Reset Method — Manual. PTC resistance must be less than 2.5 kΩ.

Possible Causes — If this condition is encountered, check the following items:
- Check for a PTC thermistor failure.
- Check for a compressor motor failure.
- Check for a wiring error.
- Check wiring terminations for corrosion.
- Check for operation outside of the limits.
- Check for condenser air recirculation.
- Check the circuit for proper charge.
- Check the EXV for proper operation.
- Check the EXV input devices, pressure transducer and temperature for accuracy.
- Check the liquid line filter drier for a restriction.

Crankcase Heater Failure

A1.02 — Compressor A1
A2.02 — Compressor A2
A3.02 — Compressor A3
A4.02 — Compressor A4
B1.02 — Compressor B1
B2.02 — Compressor B2
B3.02 — Compressor B3
B4.02 — Compressor B4
C1.02 — Compressor C1
C2.02 — Compressor C2
C3.02 — Compressor C3
C4.02 — Compressor C4

Criteria for Trip — The alarm criteria are checked whether the compressor is ON or OFF. The scroll protection module (SPM) monitors crankcase heater current draw. This family of alarms is generated if one of the following criteria is detected:

1. The SPM fails to detect a crankcase current draw of at least 0.5 amps while the crankcase heater is ON.
2. The SPM detects a crankcase current draw of at least 0.5 amps while the crankcase heater is OFF. The current is sensed internally on the SPM.

Action to be Taken — If a fault is detected, the affected compressor will be shut down or not allowed to start.

Reset Method — Manual

Possible Causes — If this condition is encountered, check the following items:
- Check the wiring to the crankcase heater.
- Check the crankcase heater for operation.
- Check the SPM crankcase heater output operation.
- Confirm unit configuration.

High Pressure Switch

A1.03 — Compressor A1
A2.03 — Compressor A2
A3.03 — Compressor A3
A4.03 — Compressor A4
B1.03 — Compressor B1
B2.03 — Compressor B2
B3.03 — Compressor B3
B4.03 — Compressor B4
C1.03 — Compressor C1
C2.03 — Compressor C2
C3.03 — Compressor C3
C4.03 — Compressor C4

Criteria for Trip — The alarm criterion is checked whether the circuit is ON or OFF. This alarm will be generated if the circuit high pressure switch (HPS) opens. The scroll protection module (SPM) monitors the HPS. The 30RB units employ one HPS for each circuit. The HPS signal is connected to all of the SPM modules of the circuit.

Action to be Taken — The circuit shuts down immediately or is not allowed to start.

Reset Method — Manual

Possible Causes — If this condition is encountered, check the following items:
- Check the wiring of the high pressure switch circuit. Be sure the HPS is connected to all of the SPM boards in the circuit.
- Check the maximum condensing temperature (MCT) for the proper setting.
- Check for noncondensables in the refrigerant circuit.
- Check for condenser air re-circulation.
- Check for the proper refrigerant charge (overcharged).
- Check for operation beyond the limit of the machine.
- Check the condenser coils for debris or restriction.
- Check the condenser fans and motors for proper rotation and operation.
- Check the discharge service valve to be sure that it is open. A closed or restricted valve is a potential high pressure trip.
- Check the discharge pressure transducer for accuracy.
- Confirm unit configuration.

Motor Sensor PTC Out of Range

A1.04 — Compressor A1
A2.04 — Compressor A2
A3.04 — Compressor A3
A4.04 — Compressor A4
B1.04 — Compressor B1
B2.04 — Compressor B2
B3.04 — Compressor B3
B4.04 — Compressor B4
C1.04 — Compressor C1
C2.04 — Compressor C2
C3.04 — Compressor C3
C4.04 — Compressor C4

Criteria for Trip — The alarm criterion is checked whether the circuit is ON or OFF. The scroll protection module (SPM) monitors the compressor motor temperature. This alarm will be generated if the motor sensor PTC in the compressor resistance is less than 50 Ω or greater than 17 kΩ.

Action to be Taken — The circuit shuts down immediately or not allowed to start.

Reset Method — Manual

Possible Causes — If this condition is encountered, check the following items:

- Check the sensor wiring to the scroll compressor protection module (SPM).
- Check for a faulty SPM.
- Check for a compressor failure.
- Check for noncondensables in the refrigerant circuit.
- Check for condenser air re-circulation.
- Check for the proper refrigerant charge (overcharged).
- Check for operation beyond the limit of the machine.
- Check the condenser coils for debris or restriction.
- Check the condenser fans and motors for proper rotation and operation.
- Check the discharge service valve to be sure that it is open.
- Check the discharge pressure transducer for accuracy.
- Confirm unit configuration.

SPM Board Power Reset

A1.05 – Compressor A1
A2.05 – Compressor A2
A3.05 – Compressor A3
A4.05 – Compressor A4
B1.05 – Compressor B1
B2.05 – Compressor B2
B3.05 – Compressor B3
B4.05 – Compressor B4
C1.05 – Compressor C1
C2.05 – Compressor C2
C3.05 – Compressor C3
C4.05 – Compressor C4

Criteria for Trip — The alarm criterion is checked whether the compressor is ON or OFF. The scroll protection module (SPM) monitors the 24 vac at the compressor through the high pressure switch input channel. This alarm will be generated if the main base board receives a signal from the SPM board indicating that the compressor went through a power cycle.

Action to be Taken — The compressor is shut down immediately or not allowed to start.

Reset Method — Automatic

Possible Causes — If this condition is encountered, check the following items:

- Check the voltage from the main three phase power supply
- Check the 24 vac wiring connections to the scroll compressor protection module (SPM)
- Check for a faulty SPM.

SPM Board Low Control Voltage Alert

A1.06 – Compressor A1
A2.06 – Compressor A2
A3.06 – Compressor A3
A4.06 – Compressor A4
B1.06 – Compressor B1
B2.06 – Compressor B2
B3.06 – Compressor B3
B4.06 – Compressor B4
C1.06 – Compressor C1
C2.06 – Compressor C2
C3.06 – Compressor C3
C4.06 – Compressor C4

Criteria for Trip — The alarm criterion is checked whether the compressor is ON or OFF. The scroll protection module (SPM) monitors the 24 vac at the compressor through the high pressure switch input channel. This alarm will be generated if the main base board receives a signal from the SPM board indicating that the 24 vac level was lower than the allowed minimum threshold.

Action to be Taken — The compressor is shut down immediately or not allowed to start as to prevent any contactor chattering/welding from occurring.

Reset Method — Automatic

Possible Causes — If this condition is encountered, check the following items:

- Check the voltage from the main three phase power supply.
- Check the 24 vac wiring connections to the scroll compressor protection module (SPM).
- Check for a faulty SPM.

Loss of Communication with Compressor

Co.A1 — Board A1
Co.A2 — Board A2
Co.A3 — Board A3
Co.A4 — Board A4
Co.B1 — Board B1
Co.B2 — Board B2
Co.B3 — Board B3
Co.B4 — Board B4
Co.C1 — Board C1
Co.C2 — Board C2
Co.C3 — Board C3
Co.C4 — Board C4

Criteria for Trip — The alarm criterion is tested whether the unit is ON or OFF. If communication with the scroll compressor protection module (SPM) is lost for a period of 10 seconds, the alarm will be generated.

Action to be Taken — The affected compressor will be shut down.

Reset Method — Automatic, if communication is established, the compressor, if called for will start normally.

Possible Causes — If this condition is encountered, check the following items:

- Check the power supply to the affected SPM.
- Check the address of the SPM to be sure that it is correct.
- Check the Local Equipment Network (LEN) wiring to be sure that it is connected properly.
- Confirm unit configuration.

Co.E1— Loss of Communication with EXV Board Number 1

Criteria for Trip — The alarm criterion is tested whether the unit is ON or OFF. If communication with EXV1 is lost for a period of 10 seconds, the alarm will be triggered.

Action to be Taken — If running, Circuit A and B will shut down normally. If Circuit A or Circuit B is not operating, it will not be allowed to start.

Reset Method — Automatic, if communication is established, the unit will start normally.

Possible Causes — If this condition is encountered, check the following items:
- Check the power supply to EXV1.
- Check the address of the EXV1 to be sure that it is correct.
- Check the Local Equipment Network (LEN) wiring to be sure that it is connected properly.
- Confirm unit configuration.

Co.E2 — Loss of Communication with EXV Board Number 2

Criteria for Trip — The alarm criterion is tested whether the unit is ON or OFF, on 30RB210-300 units only.

Action to be Taken — If communication with EXV Board 2 is lost for a period of 10 seconds, the alarm will be triggered. If running, Circuit C will shut down normally. If Circuit C is not running, it will not be allowed to start.

Reset Method — Automatic, if communication is established, the unit will start normally.

Possible Causes — If this condition is encountered, check the following items:
- Check the power supply to EXV Board 2.
- Check the address of the EXV Board 2 to be sure that it is correct.
- Check the Local Equipment Network (LEN) wiring to be sure that it is connected properly.
- Confirm unit configuration.

Co.F1 — Loss of Communication with Fan Board Number 1

Criteria for Trip — The criterion is tested whether the unit is ON or OFF. If communication with Fan Board 1 is lost for a period of 10 seconds, the alarm will be triggered.

Action to be Taken — For 30RB060-150 and 30RB210-250, Circuit A and B will shut down normally if they are running. For 30RB160-190 and 30RB275-300, Circuit A will shut down normally if it is running. If the circuit or circuits controlled by the board are not running, then they will not be allowed to start.

Reset Method — Automatic, if communication is established, the unit will start normally.

Possible Causes — If this condition is encountered, check the following items:
- Check the power supply to Fan Board 1.
- Check the address of the Fan Board 1 to be sure that it is correct.
- Check the Local Equipment Network (LEN) wiring to be sure that it is connected properly.
- Confirm unit configuration.

Co.F2 — Loss of Communication with Fan Board Number 2

Criteria for Trip — The criterion is tested whether the unit is ON or OFF and on 30RB160-190, 275, and 300 only.

Action to be Taken — If communication with Fan Board 2 is lost for a period of 10 seconds, the alarm will be triggered. If running, Circuit B will shut down normally for 30RB160-190, 275 and 300. If Circuit B is not running for 30RB160-190, 275 and 300, then it will not be allowed to start.

Reset Method — Automatic, if communication is established, the unit will start normally.

Possible Causes — If this condition is encountered, check the following items:
- Check the power supply to Fan Board 2.
- Check the address of the Fan Board 2 to be sure that it is correct.
- Check the Local Equipment Network (LEN) wiring to be sure that it is connected properly.
- Confirm unit configuration.

Co.F3 — Loss of Communication with Fan Board Number 3

Criteria for Trip — The criterion is tested whether the unit is ON or OFF, and on 30RB210-300 machines only. If communication with Fan Board 3 is lost for a period of 10 seconds, the alarm will be triggered.

Action to be Taken — If running, Circuit C will shut down normally for 30RB210-300. If the circuit is not running for 30RB210-300, then it will not be allowed to start.

Reset Method — Automatic, if communication is established, the unit will start normally.

Possible Causes — If this condition is encountered, check the following items:
- Check the power supply to Fan Board 3.
- Check the address of the Fan Board 3 to be sure that it is correct.
- Check the Local Equipment Network (LEN) wiring to be sure that it is connected properly.
- Confirm unit configuration.

Co.O1 — Loss of Communication with Free Cooling Board

Criteria for Trip — This alarm is for a free cooling machine only. This feature is not supported for a cooling only machine.

Action to be Taken — None

Reset Method — Automatic

Possible Causes — If this condition is encountered, confirm unit configuration.

Co.O2 — Loss of Communication with Electrical Heaters Board

Criteria for Trip — This alarm is for a heat pump machines only. This feature is not supported for a cooling only machine.

Action to be Taken — None

Reset Method — Automatic

Possible Causes — If this condition is encountered, confirm unit configuration.

Co.O3 — Loss of Communication with Energy Management Board

Criteria for Trip — The criterion is tested whether the unit is ON or OFF and when a function that requires the energy management module (EMM) is configured. If communication with the EMM is lost for a period of 10 seconds, the alarm will be triggered.

Action to be Taken — If any function controlled by the EMM (3-Step and 4-20 mA Demand Limit, 4-20 mA and Space Temperature Reset, Occupancy Override, and Ice Build) is active, that function will be terminated. If an EMM function is programmed, and communication is lost, the function will not be allowed to start.

Reset Method — Automatic, if communication is established, the functions will be enabled.

Possible Causes — If this condition is encountered, check the following items:
- Check configuration to see if the EMM is installed, (***Configuration→UNIT→EMM***). If (***EMM=YES***), check for a control option that requires the EMM that may be enabled. Correct configuration if not correct.
- Check the power supply to EMM.
- Check the address of the EMM to be sure that it is correct.
- Check the Local Equipment Network (LEN) wiring to be sure that it is connected properly.
- Check unit configuration to be sure that no options that require the EMM are enabled.

Co.O4 — Loss of Communication with Heat Reclaim Board

Criteria for Trip — This alarm is tested whether the unit is ON or OFF and when the unit is configured for Heat Reclaim. If communication with the heat reclaim board is lost for a period of 10 seconds, the alarm will be triggered.

Action to be Taken — The unit will return to the air cooled mode.

Reset Method — Automatic, when communication is established, the functions will be enabled.

Possible Causes — If this condition is encountered, check the following items:
- Check the power supply to heat reclaim board.
- Check the Local Equipment Network (LEN) wiring to be sure that it is connected properly.
- Check unit configuration to be sure that Heat Reclaim is enabled and unit does NOT contain the Heat Reclaim option.

Welded Contactor Failure

Ct.01 – Circuit A
Ct.02 – Circuit B
Ct.03 – Circuit C

Criteria For Trip — This alarm is tested for when the circuit is off (all compressors switched to off). The algorithm will evaluate saturated suction and saturated condensing temperatures to determine if the compressor is still running even though it has been commanded off.

Action to be Taken

1. Unit capacity will go to and remain at 0%. The EXV, fan control, and cooler pump will continue their normal operation.
2. If a high pressure, cooler flow, or cooler freeze failure occurs, then circuit operation is disabled. The critical alarm relay will be energized in order to shut off the main power supply.

Reset Method — Reset is manual.

FC.n0 — Initial Factory Configuration Required

Criteria for Trip — The criterion is tested whether the unit is ON or OFF. The alarm will be generated if the ***Configuration →UNIT→TONS*=0**.

Action to be Taken — The unit is not allowed to start.

Reset Method — Automatic after factory configuration is complete. The configuration must be manually completed. The password may default to 0113.

Possible Causes — If this condition is encountered, confirm the unit configuration.

FC.nn — Illegal Configuration

Criteria for Trip — The criterion is tested whether the unit is ON or OFF. The alarm will be generated if the one of the following configuration errors is detected by the control. The "nn" refers to the error code listed in Table 42.

Table 42 — Illegal Configuration Alarm Code

FC ERROR CODE	DESCRIPTION
01	Unit size is unknown.
02	Reclaim option selected for Heat Pump machine.
03	Hot Gas Bypass configured for a Heat Pump machine.
04	Number of Fans controlled by Motormaster® control is greater than expected.

Action to be Taken — The unit is not allowed to start.

Reset Method — Automatic after factory reconfiguration is completed. A power cycle may be required.

Possible Causes — If this condition is encountered, confirm the unit configuration.

MC.nn — Master Chiller Configuration Error

Criteria for Trip — The criterion is tested whether the unit is ON or OFF. The units must be configured as a Master and Slave machine (***Configuration→RSET→MSSL*=1** and ***Configuration→RSET→MSSL*=2**), and one of the following configuration errors has been found. The "nn" refers to the error code listed in Table 43.

Action to be Taken — Unit not allowed to start in Master Slave control.

Reset Method — Automatic

Possible Causes — If this condition is encountered, confirm proper configuration.

P.01 — Water Exchanger Freeze Protection

Criteria for Trip — The alarm criteria are checked whether the unit is ON or OFF. If the entering or leaving water thermistor senses a temperature at the freeze point or less, the alarm will be generated. For a fresh water system (***Configuration →SERV→FLUD*=1**), the freeze point is 34 F (1.1 C). For medium temperature brine systems (***Configuration →SERV→FLUD*=2**), the freeze point is Brine Freeze Set Point (***Configuration→SERV→LOSP***).

Action to be Taken — Unit shut down or not allowed to start. Chilled water pump will be started.

Reset Method — Automatic, first occurrence in 24 hours if LWT rises to 6° F (3° C) above set point. Manual, if more than one occurrence in 24 hours.

Possible Causes — If this condition is encountered, check the following items:
- Check the entering and leaving fluid thermistors for accuracy.
- Check the water flow rate.
- Check loop volume. Low loop volume at nominal flow rates can in extreme cases bypass cold water to the cooler.
- Check for freezing conditions.
- Check heater tape and other freeze protection items for proper operation.
- Check glycol concentration and adjust ***LOSP*** accordingly.
- If the Leaving Water Set Point is above 40 F (4.4 C) and there is glycol in the loop, consider using the Medium Temperature Brine option (***Configuration →SERV→FLUD*=2**) to utilize the brine freeze point instead of 34 F (1.1 C).

Low Suction Temperature

P.05 — Circuit A
P.06 — Circuit B
P.07 — Circuit C

Criteria for Trip — The criteria are tested whether the circuit is ON. This alarm is generated if one of the following criteria is met:
- If the circuit Saturated Suction Temperature is below –13 F (–25 C) for more than 30 seconds.
- If the circuit Saturated Suction Temperature is below –22 F (–30 C) for more than 8 seconds.
- If the circuit Saturated Suction Temperature is below –40 F (–40 C) for more than 3 seconds.

Action to be Taken — The circuit is shut down immediately.

Prior to the alarm trip, the control will take action to avoid the alarm. See Operating Modes 21, 22 and 23 on page 48.

- *Reset Method* — Automatic, first occurrence in 24 hours. Manual, if more than one occurrence in 24 hours.

Table 43 — Master/Slave Alarm Code

MC ERROR CODE	MASTER	SLAVE	DESCRIPTION
01	X	X	The master or slave water pump is not configured while the control of the lag unit pump is required (***lag_pump = 1***)
02	X		Master and slave units have the same network address.
03	X		There is no slave configured at the slave address
04	X		Slave ***pump_seq*** incorrect configuration
05	X		There is a conflict between the master and the slave LWT option: the master is configured for EWT control while the slave is configured for LWT control.
06	X		There is a conflict between the master and the slave LWT option: the master is configured for LWT control while the slave is configured for EWT control.
07	X		There is a conflict between the master and the slave pump option: the master is configured for lag pump control while the slave is not configured for lag pump control.
08	X		There is a conflict between the master and the slave pump option: the master is not configured for lag pump control while the slave is configured for lag pump control.
09	X	X	The slave chiller is in local or remote control (***chilstat = 3***)
10	X	X	The slave chiller is down due to fault (***chilstat = 5***)
11	X		The master chiller operating type is not Master: ***master_oper_typ*** and ***master_status = off***
12	X	X	No communication with slave.
13	X		Master and slave heat/cool status are not the same.

LEGEND
EWT — Entering Water Temperature
LWT — Leaving Water Temperature

Possible Causes — If this condition is encountered, check the following items:
- Check the sensor wiring to Main Base Board (P.05 and P.06) or Fan Board 3 (P.07).
- Check the board for a faulty channel.
- Check for a faulty transducer.
- Check cooler water flow.
- Check loop volume.
- Check EXV operation.
- Check for a liquid line refrigerant restriction, filter drier, service valve, etc.
- Check the refrigerant charge.
- If the Leaving Water Set Point is above 40 F (4.4 C) and there is glycol in the loop, consider using the Medium Temperature Brine option (***Configuration→SERV→FLUD=2***) to utilize the brine freeze point instead of 34 F (1.1 C).

High Superheat

P.08 — Circuit A
P.09 — Circuit B
P.10 — Circuit C

Criteria for Trip — The criteria are tested whether the circuit is ON. This alarm is generated if all of the following criteria are met:

1. The EXV position is equal to or greater than 98%.
2. The circuit's Suction Superheat (Suction Gas Temperature – Saturated Suction Temperature) is greater than 54 F (30.0 C).
3. The circuit's Saturated Suction Temperature is less than Maximum Operating Pressure (MOP) set point (***Configuration→SERV→MOP***) for more than 5 minutes.

Action to be Taken — The circuit is shut down normally.

Reset Method — Manual.

Possible Causes — If this condition is encountered, check the following items:
- Check the suction pressure transducer wiring to Main Base Board (P.08 and P.09) or Fan Board 3 (P.10).
- Check the board for a faulty channel.
- Check for a faulty transducer.
- Check the suction gas thermistor wiring to EXV Board 1 (P.08 and P.09) or to EXV Board 2 (P.10)
- Check the suction gas thermistor sensor for accuracy.
- Check for EXV Board 1 (P.08 and P.09) or EXV Board 2 (P.10) faulty channel.
- Check EXV operation.
- Check for a liquid line refrigerant restriction, filter drier, service valve, etc.
- Check the refrigerant charge.

Low Superheat

P.11 — Circuit A
P.12 — Circuit B
P.13 — Circuit C

Criteria for Trip — The criteria are tested whether the circuit is ON. This alarm is generated if the following criterion is met:

The EXV position is equal to or less than 5% and the circuit's Suction Superheat (Suction Gas Temperature – Saturated Suction Temperature) is less than the Suction Superheat Set Point (***Configuration→SERV→SHP.A***, ***Configuration→SERV→SHP.B***, or ***Configuration→SERV→SHP.C***) by at least 5° F (2.8° C) or the circuit Saturated Suction Temperature is greater than Maximum Operating Pressure (MOP) set point (***Configuration→SERV→MOP***) for more than 5 minutes.

Action to be Taken — The circuit is shut down normally.

Reset Method — Automatic, first occurrence in 24 hours. Manual, if more than one occurrence in 24 hours.

Possible Causes — If this condition is encountered, check the following items:
- Check the suction pressure transducer wiring to Main Base Board (P.11 and P.12) or Fan Board 3 (P.13).
- Check the board for a faulty channel.
- Check for a faulty transducer.
- Check the suction gas thermistor wiring to EXV Board 1 (P.08 and P.09) or to EXV Board 2 (P.10)
- Check the suction gas thermistor sensor for accuracy.
- Check for EXV Board 1 (P.11 and P.12) or EXV Board 2 (P.13) faulty channel.
- Check EXV operation.
- Confirm Maximum Operating Pressure Set Point.
- Check the refrigerant charge.

P.14 — Cooler Interlock Failure

Criteria for Trip — The criteria are tested whether the unit is ON or OFF. This algorithm monitors the cooler flow switch circuit, which may include field-installed cooler pump interlock (PMPI) contacts. The pump interlock and flow switch are wired in series, therefore either device can cause a

cooler interlock failure. This alarm is generated if one of the following criteria is met:

1. The circuit (flow switch and optional pump interlock installed at TB5-1 and 2) fails to close within the OFF to ON delay (***Configuration→OPTN→DELY***).
2. If the unit is the lag chiller under Master/Slave Control and the circuit fails to close within 1 minute after its pump is commanded ON.
3. The circuit opens while the machine is ON.
4. If the remote interlock switch is CLOSED while the machine is ON (units with EMM only).
5. If the machine is configured for Cooler Pump Control and the circuit does not open within 2 minutes.
6. The circuit fails to close within the OFF to ON delay when the cooler pump has been commanded ON for freeze protection.

Action to be Taken — The unit is shut down immediately, or not allowed to start.

Reset Method — Automatic, if the alarm occurs while the machine is at Stage 0 (no compressors ON). Manual reset if machine was at Stage 1 or greater.

Possible Causes — If this condition is encountered, check the following items:

- Check the chilled water flow switch operation.
- Check for water flow. Be sure all water isolation valves are open. Check the water strainer for a restriction.
- Check the interlock wiring circuit.
- Check for a power supply to the pump.
- Check for a control signal to the pump controller.
- Check the chilled water pump operation.
- Check the cooler pump contactor for proper operation.

P.15 — Condenser Flow Switch Failure

Criteria for Trip — Condenser flow switch has not closed within 1 minute after condenser pump output has energized or opens during normal operation. This alarm is for units with the heat reclaim option only.

Action to be Taken — The unit will return to the air cooled mode.

Reset Method — Manual.

Possible Causes — If this condition is encountered, check the following items:

- Check the condenser water flow switch operation.
- Check for low water flow. Be sure all water isolation valves are open.
- Check for plugged water strainer.
- Check the interlock wiring circuit.
- Check the power supply to the pump.
- Check for a control signal to the pump starter.
- Check the condenser water pump operation.
- Check the condenser pump contactor for proper operation.

Compressor Not Started or Pressure Not Established

P.16 — Compressor A1
P.17 — Compressor A2
P.18 — Compressor A3
P.19 — Compressor A4
P.20 — Compressor B1
P.21 — Compressor B2
P.22 — Compressor B3
P.23 — Compressor B4
P.24 — Compressor C1
P.25 — Compressor C2
P.26 — Compressor C3
P.27 — Compressor C4

Criteria for Trip — The criteria are tested whether the unit is ON or in Service Test. This algorithm monitors the pressure differential across the compressor to prove proper rotation of the compressor.

During normal operation with the start of a compressor, the discharge pressure for the circuit or the compressor differential (Discharge Pressure – Suction Pressure) must increase 10 psig (69 kPa) after 2 minutes. If this criterion is not met, the alarm is generated.

Action to be Taken — The circuit is shut down immediately.

Reset Method — Manual

Possible Causes — If this condition is encountered, check the following items:

- Check for power to the compressor.
- Check control voltage to the compressor contactor. On 208-volt systems, be sure the proper tap on TRAN1 is utilized.
- Check for proper electrical phasing of the unit power supply.
- Check the compressor contactor operation.
- Check the discharge and suction pressure transducers for accuracy.
- Check the wiring and location of the discharge and suction pressure transducers.

P.28 — Electrical Box Thermostat Failure/Reverse Rotation

Criteria for Trip — The criterion is tested whether the unit is ON. This alarm is generated if the signal is open.

Action to be Taken — The unit is not allowed to start.

Reset Method — Automatic, once the phasing is corrected.

Possible Causes — If this condition is encountered, check the following items:

- Check the power wiring for proper phasing.
- Check the sensor wiring to reverse rotation protection board.

P.29 — Loss of Communication with System Manager

Criteria for Trip — The criterion is tested whether the unit is ON or OFF. This alarm is generated if the System Manager had established communications with the machine and is lost for more than 2 minutes.

Action to be Taken — The action to be taken by the control depends on the configuration. If Auto Start when SM lost is enabled, (***Configuration→SERV→AU.SM***=**YES**), then the unit will force the CCN Chiller Start Stop (***Run Status →R.CCN→CH.SS***) to **ENBL** and clear all forced points from the System Manager. The unit will revert to stand-alone operation.

Reset Method — Automatic, once communication is re-established.

Possible Causes — If this condition is encountered, check the following items:

- Check communication wiring.
- Check the power supply to the System Manager and unit controls.

P.30 — Master/Slave Communication Failure

Criteria for Trip — The criterion is tested whether the units are ON or OFF and a Master and Slave machine has been configured, (***Configuration→RSET→MSSL***=**1** and ***Configuration →RSET→MSSL***=**2**). If communication is lost for more than 3 minutes, this alarm is generated.

Action to be Taken — Dual chiller control will be disabled and each unit will operate in Stand-Alone mode.

Reset Method — Automatic, once communication is re-established.

Possible Causes — If this condition is encountered, check the following items:

- Check the CCN wiring.
- Check for control power to each Main Base Board, Master and Slave.

- Confirm correct configuration.

P.31 — Unit is in Emergency Stop

Criteria for Trip — The criterion is tested whether the units are ON or OFF and the machine receives a Carrier Comfort Network® (CCN) command for an Emergency Stop.

Action to be Taken — Unit will stop, or not allowed to start.

Reset Method — Automatic, once a return to normal command is received.

Possible Causes — If this condition is encountered, check for CCN Emergency Stop command.

Cooler Pump Fault

P.32 — Pump 1 Fault
P.33 — Pump 2 Fault

Criteria for Trip — The criterion is tested whether the units are ON or OFF. This alarm will be generated if the cooler pump interlock opens. When starting the pump, the control must read an open circuit for 3 consecutive reads. If the pump is operating and the circuit opens, the alarm will be generated immediately.

Action to be Taken — The pump and machine will be shut down. If there is another pump available, the control will start that pump, restart the machine and clear the alarm. If no other pump is available, the unit will remain OFF.

Reset Method — Manual.

Possible Causes — If this condition is encountered, check the following items:

- Check the interlock wiring circuit.
- Check for a control signal to the pump controller.
- Check the cooler pump contactor for proper operation.
- Check control voltage for proper voltage. On 208-volt systems, be sure the proper tap on TRAN1 is utilized.

Reclaim Operation Failure

P.34 — Circuit A
P.35 — Circuit B

Criteria for Trip — Reclaim operation failure due to high SCT. This alarm is for units with the heat reclaim option only.

Action to be Taken — The affected circuit will return to air cooled mode.

Reset Method — Manual.

Possible Causes — If this condition is encountered, check the following items:

- Check for low water flow. Be sure all water isolation valves are open.
- Check for plugged water strainer.
- Check for fouled tubes in reclaim condenser.

Repeated High Discharge Gas Overrides

P.37 — Circuit A
P.38 — Circuit B
P.39 — Circuit C

Criteria for Trip — The criterion is tested when the circuit is ON. This alarm will be tripped if the circuit capacity is reduced more than 8 times in 30 minutes due to high discharge gas temperatures. If no override occurs in a 30-minute period, the counter is reset.

Action to be Taken — The affected circuit will be shut down.

Reset Method — Automatic, after 30 minutes. If the alarm is cleared via the Manual method, the counter will be reset to zero.

Possible Causes — If this condition is encountered, check the following items:

- Check the maximum condensing temperature (MCT) for the proper setting.
- Check for noncondensables in the refrigerant circuit.
- Check for condenser air re-circulation.
- Check for the proper refrigerant charge (overcharged).
- Check for operation beyond the limit of the machine.
- Check the condenser coils for debris or restriction.
- Check the condenser fans and motors for proper rotation and operation.
- Check the discharge service valve to be sure that it is open. Check the discharge pressure transducer for accuracy.
- Confirm unit configuration.

Repeated Low Suction Temperature Overrides

P.40 – Circuit A
P.41 – Circuit B
P.42 – Circuit C

Criteria for Trip — This alarm was added in software version 1.09. The criterion is active when circuit is ON. If the circuit's capacity is reduced more than 6 times by the Capacity Override 23 (Circuit A), 24 (Circuit B), or 25 (Circuit C) for the respective circuit, without at least 30 minutes elapsing between the capacity reductions, the alarm is triggered. If at least 30 minutes elapses without a reduction in capacity, the counter is reset to zero.

Action to be Taken — Circuit shut down.

Reset Method — Manual.

Possible Causes — If this condition is encountered, check the following items:

- Confirm unit configuration.
- Check EXV operation.
- Check for a liquid line refrigerant restriction, service valve partially closed, filter drier with excessive pressure drop.
- Check the refrigerant charge.
- Check suction pressure transducer accuracy.
- Check return gas thermistor accuracy.
- Check Circuit Superheat Set Point (***Configuration →SERV→SHP.A, SHP.B, or SHP.C***).
- Check if system contains antifreeze (***Configuration →SERV→FLUD*=2**).
- Check Brine Freeze Set Point (***Configuration →SERV→LOSP***) if an antifreeze solution is used.
- Check fluid flow rate.
- Check strainer for a restriction, clean if necessary.
- Check for cooler fouling.
- Check compressor oil level. If oil level is above the top of the sightglass, then oil may be logging in the cooler. Adjust oil level in compressor(s).

P.97 — Water Exchanger Temperature Sensors Swapped

Criteria for Trip — The alarm criterion is checked when the chiller is ON and one or more compressors is running. This alarm will be tripped if the entering water temperature is less than the leaving water temperature for more than 1 minute.

Action to be Taken — The chiller is shut down immediately.

Reset Method — Manual

Possible Causes — If this condition is encountered, check the following items:

- Check LWT and EWT wiring at main base board (connector J6, channels 1,2) .
- Check for a faulty entering or leaving water temperature sensor.
- Check cooler nozzles for proper water temperature sensor locations.

Discharge Transducer Failure

Pr.01 — Circuit A
Pr.02 — Circuit B
Pr.03 — Circuit C

Criteria for Trip — The criterion is tested whether the circuit is ON or OFF. This alarm is generated if the voltage as sensed by the MBB or FB3 is 0 vdc.

Action to be Taken — The circuit is shut down normally, or not allowed to start.

Reset Method — Automatic, once the transducer voltage is greater than 0 vdc.

Possible Causes — If this condition is encountered, check the following items:

- Check the sensor wiring to main base board (Pr.01 and Pr.02).
- Check the sensor wiring to Fan Board 3 (Pr.03).
- Check the board for a faulty channel.
- Check for a faulty transducer.
- Confirm unit configuration.

Suction Transducer Failure

Pr.04 — Circuit A
Pr.05 — Circuit B
Pr.06 — Circuit C

Criteria for Trip — The criteria are tested whether the circuit is ON or OFF. The alarm is generated if one of the following criteria is met:

1. This alarm is generated if the voltage as sensed by the MBB or FB3 is 0 vdc.
2. The circuit is ON in cooling mode and the saturated suction temperature for the circuit is greater than the referenced cooler leaving temperature (RCLT) for more than 60 seconds.

   RCLT = EWT – (EWT – LWT) * circuit running tons / total tons

Action to be Taken — The circuit is shut down immediately, or not allowed to start.

Reset Method — Automatic when the suction pressure reading is within the range except if it was tripped by criteria 2.

The reset will be manual if the alarm trips 3 times within a 24-hour period or if it has been tripped by criterea 2.

Possible Causes — If this condition is encountered, check the following items:

- Check for power to the compressor (i.e., circuit breaker, contactor operation).
- Check the sensor wiring to main base board (Pr.04 and Pr.05).
- Check the sensor wiring to Fan Board 3 (Pr.06).
- Check the board for a faulty channel.
- Check for a faulty transducer.
- Check for a faulty leaving water temperature sensor.
- Confirm unit configuration.
- Check EWT sensor.

Reclaim Pumpdown Pressure Transducer

Pr.07 — Circuit A
Pr.08 — Circuit B

Criteria for Trip — Tested when the unit is On or Off. This alarm is generated if the voltage as sensed by the heat reclaim board is 0 vdc. This alarm is for units with the heat reclaim option only.

Action to be Taken — The circuit will initiate a reclaim to air cooled changeover and stay in air cooled mode if it had been operating in reclaim mode.

Reset Method — Automatic when the transducer reading returns to normal.

Possible Causes — If this condition is encountered, check the following items:

- Check the sensor wiring to heat reclaim board.
- Check for a faulty transducer.
- Check the board for a faulty channel.
- Confirm unit configuration.

Sr.nn — Service Maintenance Alert

Criteria for Trip — This alert is tested whether the unit is ON or OFF and the Servicing Alert decisions listed under ***Time Clock→MCFG*** have been enabled. The alarm will be generated if the one of the following configuration errors is detected by the control. The "nn" refers to the error code listed in Table 44.

Action to be Taken — None.

Reset Method — Manual, after the service has been completed and ***Time Clock→MCFG→ RS.SV*** is reset for the alert.

Possible Causes — If this condition is encountered, confirm the machine's configuration.

Table 44 — Service Maintenance Alert Codes

CODE	DESCRIPTION
01	Circuit A Loss of Refrigerant Charge
02	Circuit B Loss of Refrigerant Charge
03	Circuit C Loss of Refrigerant Charge
04	Water Loop Size Warning
05	Air Exchanger Cleanliness Warning
06	Pump 1 Servicing Required
07	Pump 2 Servicing Required
08	Reclaim Pump Servicing Required
09	Water Filter Servicing Required

Water Exchanger Fluid Thermistor Failure

th.01 — Entering
th.02 — Leaving

Criteria for Trip — If the temperature as measured by the thermistor is outside of the range –40 F (–40 C) to 240 F (115.6 C).

Action to be Taken — The unit shuts down normally, or is not allowed to start.

Reset Method — Automatic, the alarm will reset once the thermistor reading is within the expected range.

Possible Causes — If this condition is encountered, check the following items:

- Check the sensor wiring to the main base board.
- Check the sensor for accuracy.

For thermistor descriptions, identifiers and connections, see Thermistors on page 71.

th.03 — Circuit A Defrost Thermistor Failure
th.04 — Circuit B Defrost Thermistor Failure

Criteria for Trip — This alarm is for a heat pump machine only. This feature is not supported for a cooling only machine.

Action to be Taken — None

Reset Method — Automatic

Possible Causes — If this condition is encountered, confirm the machine's configuration.

th.08 — Entering Condenser Reclaim Thermistor

Criteria for Trip — Tested when the unit is On or Off. This alarm is generated if the temperature measured by the sensor is outside the range of –40 F (–40 C) to 240 F (115.6 C). This alarm is for units with the heat reclaim option only.

Action to be Taken — The unit will return to the air cooled mode.

Reset Method — Automatic, the alarm will reset once the thermistor reading is within the expected range.

Possible Causes — If this condition is encountered, check the following items:

- Check the sensor wiring to the heat reclaim board.
- Check for a faulty thermistor.
- Check the board for a faulty channel.
- Confirm unit configuration.

th.09 — Leaving Condenser Reclaim Thermistor

Criteria for Trip — Tested when the unit is On or Off. This alarm is generated if the temperature measured by the sensor is outside the range of –40 F (–40 C) to 240 F (115.6 C). This alarm is for units with the heat reclaim option only.

Action to be Taken — None

Reset Method — Automatic, the alarm will reset once the thermistor reading is within the expected range.

Possible Causes — If this condition is encountered, check the following items:
- Check the sensor wiring to the heat reclaim board.
- Check for a faulty thermistor.
- Check the board for a faulty channel.
- Confirm unit configuration.

th.10 — OAT Thermistor Failure

Criteria for Trip — If the outdoor air temperature as measured by the thermistor is outside of the range –40 F (–40 C) to 240 F (115.6 C).

Action to be Taken — Unit shuts down under normal conditions or is not allowed to start. Temperature reset based on outdoor air temperature will be disabled.

The OAT sensor controls the cooler heaters. If this sensor fails, the cooler heaters will be energized when the machine stages to 0.

Reset Method — Automatic, the alarm will reset once the thermistor reading is within the expected range and Temperature reset based on outdoor-air temperature will be enabled.

Possible Causes — If this condition is encountered, check the following items:
- Check the sensor wiring to the main base board.
- Check for a faulty thermistor.

For thermistor descriptions, identifiers and connections, see Thermistors on this page.

th.11 — Master/Slave Common Fluid Thermistor

Criteria for Trip — This alarm criterion is checked whether the unit is ON or OFF and has been configured for Dual Chiller Control. The alarm will be triggered if the Dual Chiller Common Fluid temperature as measured by the thermistor is outside of the range –40 F (–40 C) to 240 F (115.6 C).

Action to be Taken — Dual Chiller Control disabled. Units operate as a stand-alone machine.

Reset Method — Automatic, once the thermistor reading is within the expected range. The Dual Chiller algorithm will resume once the alarm is cleared.

Possible Causes — If this condition is encountered, check the following items:
- Check the sensor wiring to the main base board.
- Check for a faulty thermistor.

For thermistor descriptions, identifiers and connections, see Thermistors on this page.

Suction Gas Thermistor

th.12 — Circuit A
th.13 — Circuit B
th.14 — Circuit C

Criteria for Trip — This alarm criterion is checked whether the unit is ON or OFF. If the suction gas temperature as measured by the thermistor is outside of the range –40 F (–40 C) to 240 F (115.6 C), the alarm will be triggered.

Action to be Taken — The affected circuit shuts down normally.

Reset Method — Automatic, once the thermistor reading is within the expected range. The affected circuit will restart once the alarm has cleared.

Possible Causes — If this condition is encountered, check the following items:
- Check the sensor wiring to the EXV board.
- Check the board for a faulty channel.
- Check for a faulty thermistor.

For thermistor descriptions, identifiers and connections, see Thermistors on this page.

Condenser Subcooling Liquid Thermistor

th.18 — Circuit A
th.19 — Circuit B

Criteria for Trip — Tested when the unit is On or Off. If the temperature as measured by the sensor is outside of the range of –40 F (–40 C) to 240 F (115.6 C). This alarm is for units with the heat reclaim option only.

Action to be Taken — The unit will return to the air cooled mode.

Reset Method — Automatic, the alarm will reset once the reading is within the expected range.

Possible Causes — If this condition is encountered, check the following items:
- Check the sensor wiring to the EMM HR.
- Check for a faulty thermistor.
- Confirm unit configuration.

th.21 — Space Temperature Sensor Failure

Criteria for Trip — This alarm criterion is checked whether the unit is ON or OFF and if Space Temperature Reset has been enabled. If the outdoor-air temperature as measured by the thermistor is outside of the range –40 F (–40 C) to 240 F (115.6 C), the alarm will be triggered.

Action to be Taken — Unit operates under normal control. Temperature Reset based on Space Temperature is disabled.

Reset Method — Automatic, once the thermistor reading is within the expected range. The Space Temperature Reset will resume once the alarm has cleared.

Possible Causes — If this condition is encountered, check the following items:
- Check the sensor wiring to the energy management module.
- Check the board for a faulty channel.
- Check for a faulty thermistor.

For thermistor descriptions, identifiers and connections, see Thermistors below.

Sensors — The electronic control uses up to six thermistors to sense temperatures and up to six transducers to sense pressure for controlling chiller operation. These sensors are outlined below.

Thermistors (Tables 45-46B) — Thermistors that are monitoring the chiller's operation include: cooler entering water, cooler leaving water, dual chiller leaving water, compressor suction gas temperature, and outside air thermistors. These thermistors are 5 kΩ at 77 F (25 C) and are identical in temperature versus resistance. The space temperature thermistor is 10 kΩ at 77 F (25 C) and has a different temperature vs. resistance.

COOLER LEAVING FLUID SENSOR — On all sizes, this thermistor is installed in a friction fit well in the leaving water nozzle of the cooler. See Fig. 34 and 35.

COOLER ENTERING FLUID SENSOR — On all sizes, this thermistor is factory-installed in a friction fit well in the entering water nozzle of the cooler.

DUAL CHILLER LWT — On duplex chillers, 30RB315-390, a factory-supplied, field-installed friction fit well and thermistor are installed in the common supply water header of the two modules.

COMPRESSOR RETURN GAS TEMPERATURE — This thermistor is factory-installed in a friction fit well located in the

common suction line for the circuit. There is one thermistor for each circuit.

OUTDOOR AIR TEMPERATURE — This sensor is factory-installed and is attached to the bottom of the condenser mounting rail.

REMOTE SPACE TEMPERATURE — This sensor (part no. 33ZCT55SPT) is a field-installed accessory mounted in the indoor space and is used for water temperature reset. The sensor should be installed as a wall-mounted thermostat would be (in the conditioned space where it will not be subjected to either a cooling or heating source or direct exposure to sunlight, and 4 to 5 ft above the floor).

Space temperature sensor wires are to be connected to terminals in the unit main control box. See Fig. 36. The space temperature sensor includes a terminal block (SEN) and a RJ11 female connector. The RJ11 connector is used access into the Carrier Comfort Network (CCN) at the sensor.

To connect the space temperature sensor (see Fig. 36):

1. Using a 20 AWG twisted pair conductor cable rated for the application, connect one wire of the twisted pair to one SEN terminal and connect the other wire to the other SEN terminal located under the cover of the space temperature sensor.
2. Connect the other ends of the wires to terminals 7 and 8 on TB6 located in the unit control box.

Units on the CCN can be monitored from the space at the sensor through the RJ11 connector, if desired. To wire the RJ11 connector into the CCN:

1. Cut the CCN wire and strip ends of the red (+), white (ground), and black (–) conductors. (If another wire color scheme is used, strip ends of appropriate wires.)
2. Insert and secure the red (+) wire to terminal 5 of the space temperature sensor terminal block.
3. Insert and secure the white (ground) wire to terminal 4 of the space temperature sensor.
4. Insert and secure the black (–) wire to terminal 2 of the space temperature sensor.

IMPORTANT: The cable selected for the RJ11 connector wiring MUST be identical to the CCN communication bus wire used for the entire network. Refer to Table 12 for acceptable wiring.

5. Connect the other end of the communication bus cable to the remainder of the CCN communication bus.

NOTE: The energy management module (EMM) is required for this accessory.

Table 45 — Thermistor Identification

THERMISTOR ID	DESCRIPTION	RESISTANCE AT 77 F (25 C)	CONNECTION POINT
EWT	Entering Water Thermistor	5k Ω	MBB-J6-CH2
LWT	Leaving Water Thermistor	5k Ω	MBB-J6-CH1
OAT	Outdoor Air Thermistor	5k Ω	MBB-J6-CH4
SGTA	Circuit A Suction Gas Thermistor	5k Ω	EXV1-J3-A, THA
SGTB	Circuit B Suction Gas Thermistor	5k Ω	EXV1-J3-B, THB
SGTC	Circuit C Suction Gas Thermistor	5k Ω	EXV2-J3-A, THA
DUAL	Dual Chiller LWT Thermistor	5k Ω	MBB-J6-CH3
SPT	Space Temperature Thermistor	10k Ω	EMM-J6-CH2

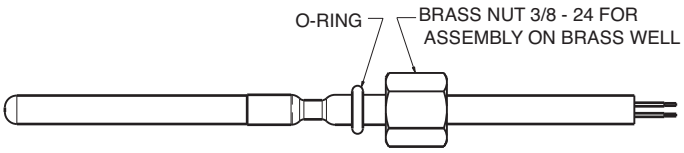

Fig. 34 — 5K Thermistor (P/N 30RB660036)

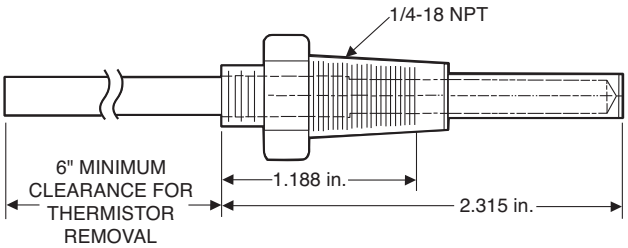

Fig. 35 — Entering and Leaving Dual Water Thermistor Well (P/N 00PPG000008000A)

Table 46A — 5K Thermistor Temperature (°F) vs Resistance

TEMP (F)	RESISTANCE (Ohms)
–25	98,010
–24	94,707
–23	91,522
–22	88,449
–21	85,486
–20	82,627
–19	79,871
–18	77,212
–17	74,648
–16	72,175
–15	69,790
–14	67,490
–13	65,272
–12	63,133
–11	61,070
–10	59,081
–9	57,162
–8	55,311
–7	53,526
–6	51,804
–5	50,143
–4	48,541
–3	46,996
–2	45,505
–1	44,066
0	42,679
1	41,339
2	40,047
3	38,800
4	37,596
5	36,435
6	35,313
7	34,231
8	33,185
9	32,176
10	31,202
11	30,260
12	29,351
13	28,473
14	27,624
15	26,804
16	26,011
17	25,245
18	24,505
19	23,789
20	23,096
21	22,427
22	21,779
23	21,153
24	20,547
25	19,960
26	19,393
27	18,843
28	18,311
29	17,796
30	17,297
31	16,814
32	16,346
33	15,892
34	15,453
35	15,027
36	14,614
37	14,214
38	13,826
39	13,449
40	13,084
41	12,730
42	12,387
43	12,053
44	11,730
45	11,416
46	11,112
47	10,816
48	10,529
49	10,250
50	9,979
51	9,717
52	9,461
53	9,213
54	8,973
55	8,739
56	8,511
57	8,291
58	8,076
59	7,686
60	7,665
61	7,468
62	7,277
63	7,091
64	6,911
65	6,735
66	6,564
67	6,399
68	6,238
69	6,081
70	5,929
71	5,781
72	5,637
73	5,497
74	5,361
75	5,229
76	5,101
77	4,976
78	4,855
79	4,737
80	4,622
81	4,511
82	4,403
83	4,298
84	4,196
85	4,096
86	4,000
87	3,906
88	3,814
89	3,726
90	3,640
91	3,556
92	3,474
93	3,395
94	3,318
95	3,243
96	3,170
97	3,099
98	3,031
99	2,964
100	2,898
101	2,835
102	2,773
103	2,713
104	2,655
105	2,597
106	2,542
107	2,488
108	2,436
109	2,385
110	2,335
111	2,286
112	2,239
113	2,192
114	2,147
115	2,103
116	2,060
117	2,018
118	1,977
119	1,937
120	1,898
121	1,860
122	1,822
123	1,786
124	1,750
125	1,715
126	1,680
127	1,647
128	1,614
129	1,582
130	1,550
131	1,519
132	1,489
133	1,459
134	1,430
135	1,401
136	1,373
137	1,345
138	1,318
139	1,291
140	1,265
141	1,240
142	1,214
143	1,190
144	1,165
145	1,141
146	1,118
147	1,095
148	1,072
149	1,050
150	1,029
151	1,007
152	986
153	965
154	945
155	925
156	906
157	887
158	868
159	850
160	832
161	815
162	798
163	782
164	765
165	750
166	734
167	719
168	705
169	690
170	677
171	663
172	650
173	638
174	626
175	614
176	602
177	591
178	581
179	570
180	561
181	551
182	542
183	533
184	524
185	516
186	508
187	501
188	494
189	487
190	480
191	473
192	467
193	461
194	456
195	450
196	445
197	439
198	434
199	429
200	424
201	419
202	415
203	410
204	405
205	401
206	396
207	391
208	386
209	382
210	377
211	372
212	367
213	361
214	356
215	350
216	344
217	338
218	332
219	325
220	318
221	311
222	304
223	297
224	289
225	282

Table 46B — 5K Thermistor Temperature (°C) vs Resistance/Voltage

TEMP (C)	RESISTANCE (Ohms)
–32	100,260
–31	94,165
–30	88,480
–29	83,170
–28	78,125
–27	73,580
–26	69,250
–25	65,205
–24	61,420
–23	57,875
–22	54,555
–21	51,450
–20	48,536
–19	45,807
–18	43,247
–17	40,845
–16	38,592
–15	38,476
–14	34,489
–13	32,621
–12	30,866
–11	29,216
–10	27,633
–9	26,202
–8	24,827
–7	23,532
–6	22,313
–5	21,163
–4	20,079
–3	19,058
–2	18,094
–1	17,184
0	16,325
1	15,515
2	14,749
3	14,026
4	13,342
5	12,696
6	12,085
7	11,506
8	10,959
9	10,441
10	9,949
11	9,485
12	9,044
13	8,627
14	8,231

TEMP (C)	RESISTANCE (Ohms)
15	7,855
16	7,499
17	7,161
18	6,840
19	6,536
20	6,246
21	5,971
22	5,710
23	5,461
24	5,225
25	5,000
26	4,786
27	4,583
28	4,389
29	4,204
30	4,028
31	3,861
32	3,701
33	3,549
34	3,404
35	3,266
36	3,134
37	3,008
38	2,888
39	2,773
40	2,663
41	2,559
42	2,459
43	2,363
44	2,272
45	2,184
46	2,101
47	2,021
48	1,944
49	1,871
50	1,801
51	1,734
52	1,670
53	1,609
54	1,550
55	1,493
56	1,439
57	1,387
58	1,337
59	1,290
60	1,244
61	1,200

TEMP (C)	RESISTANCE (Ohms)
62	1,158
63	1,118
64	1,079
65	1,041
66	1,006
67	971
68	938
69	906
70	876
71	836
72	805
73	775
74	747
75	719
76	693
77	669
78	645
79	623
80	602
81	583
82	564
83	547
84	531
85	516
86	502
87	489
88	477
89	466
90	456
91	446
92	436
93	427
94	419
95	410
96	402
97	393
98	385
99	376
100	367
101	357
102	346
103	335
104	324
105	312
106	299
107	285

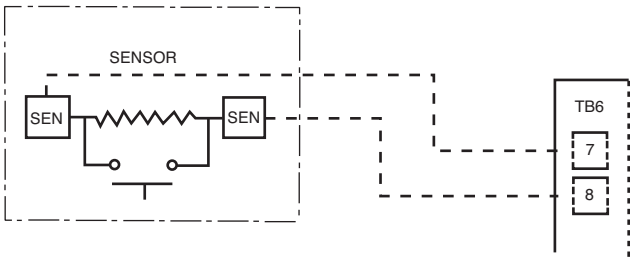

Fig. 36 — Typical Remote Space Temperature Sensor Wiring

Service Test — Main power and control circuit power must be on for Service Test.

The Service Test function is used to verify proper operation of various devices within the chiller, such as condenser fan(s), compressors, minimum load valve solenoid (if installed), cooler pump(s) and remote alarm relay. This is helpful during the start-up procedure to determine if devices are installed correctly. See Fig. 37-41 for 30RB wiring diagrams.

To use the Service Test mode, the Enable/Off/Remote Contact switch must be in the OFF position. Use the display keys to move to the Service Test mode. The items are described in the Service Test table. There are two sub-modes available. ***Service Test→T.REQ*** allows for manual control of the compressors and minimum load control. In this mode the compressors will operate only on command. The capacity control and head pressure control algorithms will be active. The condenser fans will operate along with the EXVs. There must be a load on the chiller of operate for an extended period of time. All circuit safeties will be honored during the test. ***Service Test→QUIC*** allows for test of EXVs, condenser fans, pumps, low ambient head pressure control speed control, crankcase and cooler heaters, and status points (alarm relays, running status and chiller capacity). This mode allows for the testing of non-refrigeration items. If there are no keys pressed for 5 minutes, the active test mode will be disabled.

To enter the Manual Control mode, the Enable/Off/Remote Contact switch must be in the OFF position. Move the LED to the Service Test mode. Press ENTER to access ***TEST***. Press ENTER to access ***T.REQ.*** Press ENTER and the display will show **OFF**. Press ENTER and **OFF** will flash. Enter the password if required. Use either arrow key to change the

T.REQ value to **ON** and press ENTER. Manual Control mode is now active. Press the arrow keys to move to the appropriate item. To activate an item locate the item, press ENTER and the display will show **OFF**. Press ENTER and **OFF** will flash. Use either arrow key to change the value to **ON** and press ENTER. The item should be active. To turn the item off, locate the item, press ENTER and the display will show **ON**. The chiller must be enabled by turning the Enable/Off/Remote Contact switch to Enable. Press ENTER and **ON** will flash. Use either arrow key to change the value to **OFF** and press ENTER. The item should be inactive.

To enter the Quick Test mode, the Enable/Off/Remote Contact switch must be in the OFF position. Move the LED to the Service Test mode. Press ENTER to access ***TEST***. Use the ▼ key until the display reads **QUIC**. Press ENTER to access ***Q.REQ***. Press ENTER and the display will show **OFF**. Press ENTER and **OFF** will flash. Enter the password if required. Use either arrow key to change the ***QUIC*** value to **ON** and press ENTER. Quick Test mode is now active. Follow the same instructions for the Manual Control mode to activate a component.

Example — Test the chilled water pump (see Table 47).

Power must be applied to the unit. Enable/Off/Remote Contact switch must be in the OFF position.

Table 47 — Testing the Chilled Water Pump

MODE (Red LED)	SUB-MODE	KEYPAD ENTRY	ITEM	DISPLAY EXPANSION	VALUE DESCRIPTION (Units)	COMMENT
SERVICE TEST		ENTER		Service Test Mode		
	TEST	↓		Manual Sequence		
	QUIC	ENTER	Q.REQ			
			PASS WORD			Password may be required
		ENTER			0111	
		ENTER ENTER ENTER ENTER				Each ENTER will lock in the next digit. If 0111 is not the password, use the arrow keys to change the password digit and press ENTER when correct.
		ENTER	Q.REQ			Returns to the original field
		ENTER			OFF	
		ENTER			OFF	OFF will flash
		↓			ON	The Enable/Off/Remote Contact switch must be in the OFF position.
		ESCAPE	Q.REQ			
		↓	EXV.A			
		↓	EXV.B			
		↓	PMP.1	Water Exchanger Pump 1		
		ENTER			OFF	
		ENTER			OFF	OFF will flash
		↓			ON	
		ENTER			ON	Pump 1 will turn on.
		ENTER			ON	ON will flash
		↓			OFF	
		ENTER			OFF	Pump 1 will turn off.

Test the condenser fans, cooler pump(s) and alarm relay by changing the item values from OFF to ON. These discrete outputs are then turned off if there is no keypad activity for 10 minutes. Test the compressor and minimum load valve solenoid (if installed) outputs in a similar manner. The minimum load valve solenoids will be turned off if there is no keypad activity for 10 minutes. Compressors will stay on until the operator turns them off. The Service Test mode will remain enabled for as long as there is one or more compressors running. All safeties are monitored during this test and will turn a compressor, circuit or the machine off if required. Any other mode or sub-mode can be accessed, viewed, or changed during the Manual Control mode only. The ***STAT*** item (***Run Status→VIEW***) will display "0" as long as the Service mode is enabled. The ***TEST*** sub-mode value must be changed back to OFF before the chiller can be switched to Enable or Remote contact for normal operation.

NOTE: There may be up to a one-minute delay before the selected item is energized.

LEGEND FOR FIG. 37-41

ALM R — Alarm Relay
ALT R — Alert Relay
CB — Circuit Breaker
CL-HT — Cooler Heater
CWFS — Chilled Water Flow Switch
DLSV — Discharge Line Soleniod Valve
DPT — Discharge Pressure Transducer
ECA — Entering Condenser
EMM — Energy Management Module
EXV — Electronic Expansion Valve
FIOP — Factory-Installed Option
FM — Fan Motor
HOA — Hand/Off/Auto
HOA-A — Hand/Off/Auto, Auto Setting
LCW — Leaving Condenser Water
LLSV — Liquid Line Soleniod Valve
LWT — Leaving Water Temperature
MLV — Minimum Load Valve
MM — Low Ambient Temperature Head Pressure Control
OAT — Outdoor Air Temperature
PDP — Pumpdown Pressure
PMP — Pump, Chilled Water
PMPI — Chilled Water Pump Interlock
RDY R — Ready Relay
RRB — Reverse Rotation Board
RUN R — Run Relay
SGT — Suction Gas Thermistor
SHD R — Shutdown Relay
SPM — Scroll Protection Module
SPT — Suction Pressure Transducer
TB — Terminal Block
TRAN — Transformer
UPC — Unitary Protocol Controller

Terminal Block Connection
Marked Terminal
Unmarked Terminal
Unmarked Splice
Factory Wiring
Optional Wiring
Indicates common potential.
Does not represent wiring.
FIOP or Accessory
Wire Tag

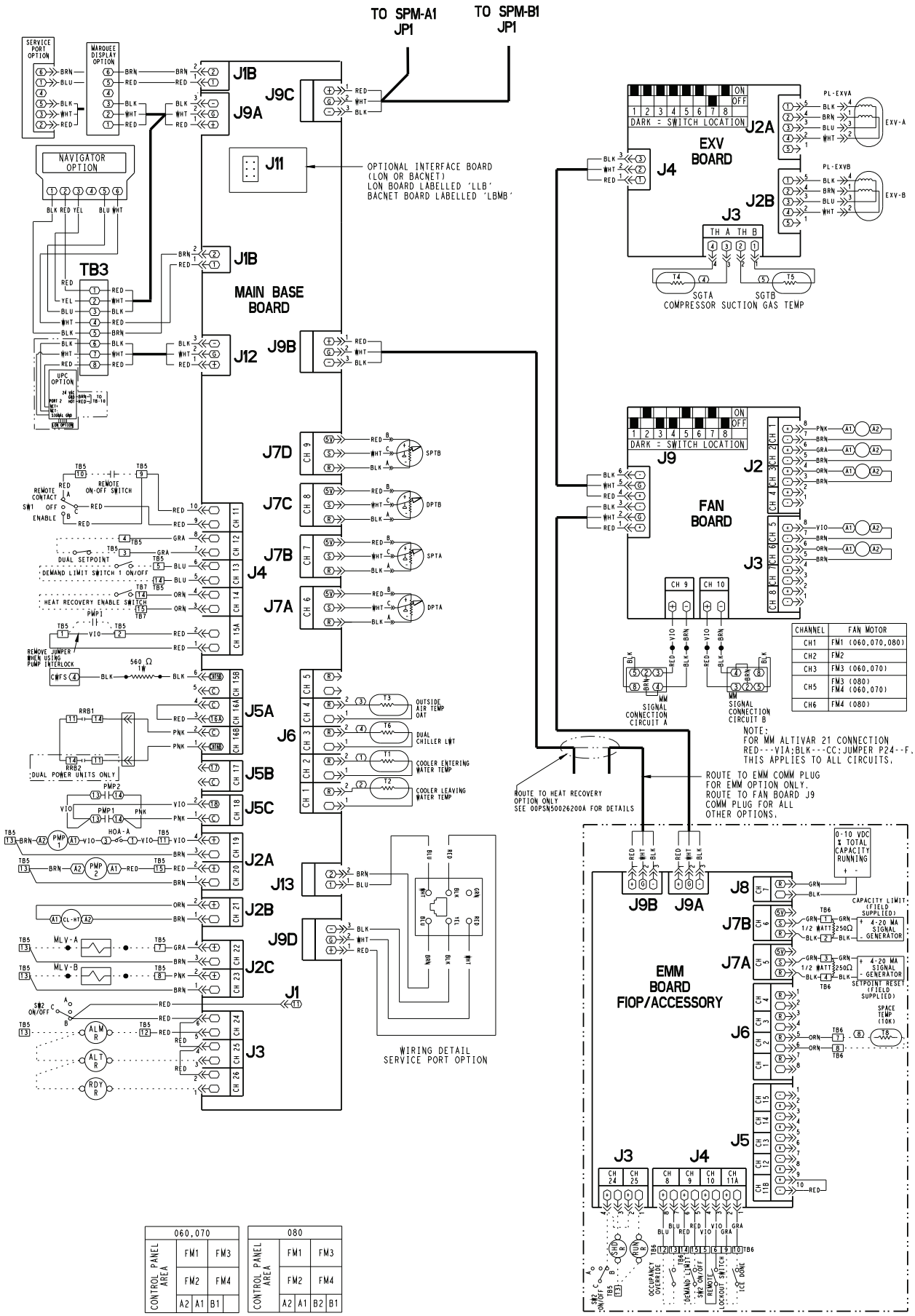

CHANNEL	FAN MOTOR
CH1	FM1 (060,070,080)
CH2	FM2
CH3	FM3 (060,070)
CH5	FM3 (080) FM4 (060,070)
CH6	FM4 (080)

Fig. 37 — Control Schematic, 30RB060-080

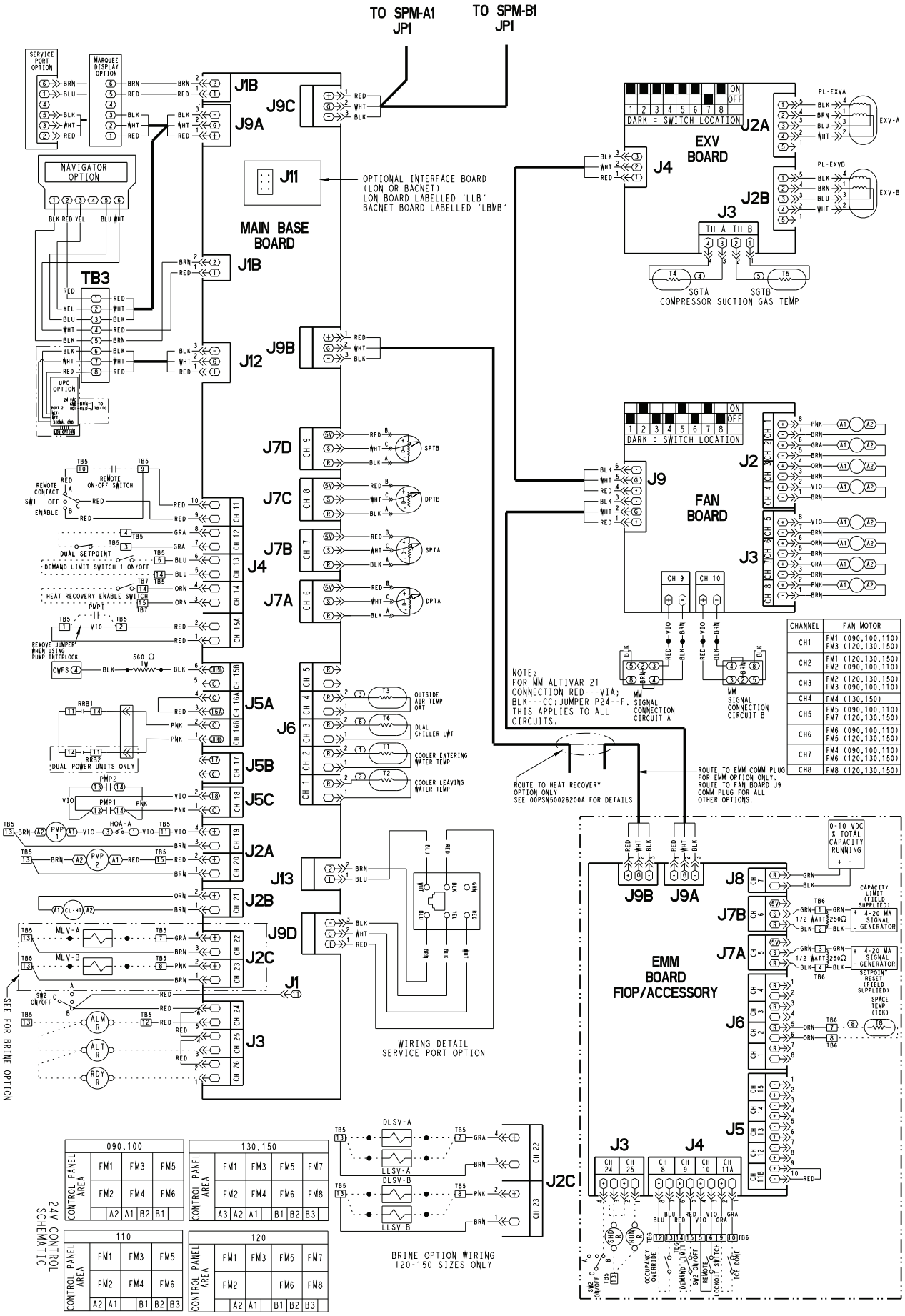

CHANNEL	FAN MOTOR
CH1	FM1 (090,100,110) FM3 (120,130,150)
CH2	FM1 (120,130,150) FM2 (090,100,110)
CH3	FM2 (120,130,150) FM3 (090,100,110)
CH4	FM4 (130,150)
CH5	FM5 (090,100,110) FM7 (120,130,150)
CH6	FM6 (090,100,110) FM5 (120,130,150)
CH7	FM4 (090,100,110) FM6 (120,130,150)
CH8	FM8 (120,130,150)

Fig. 38 — Control Schematic, 30RB090-150

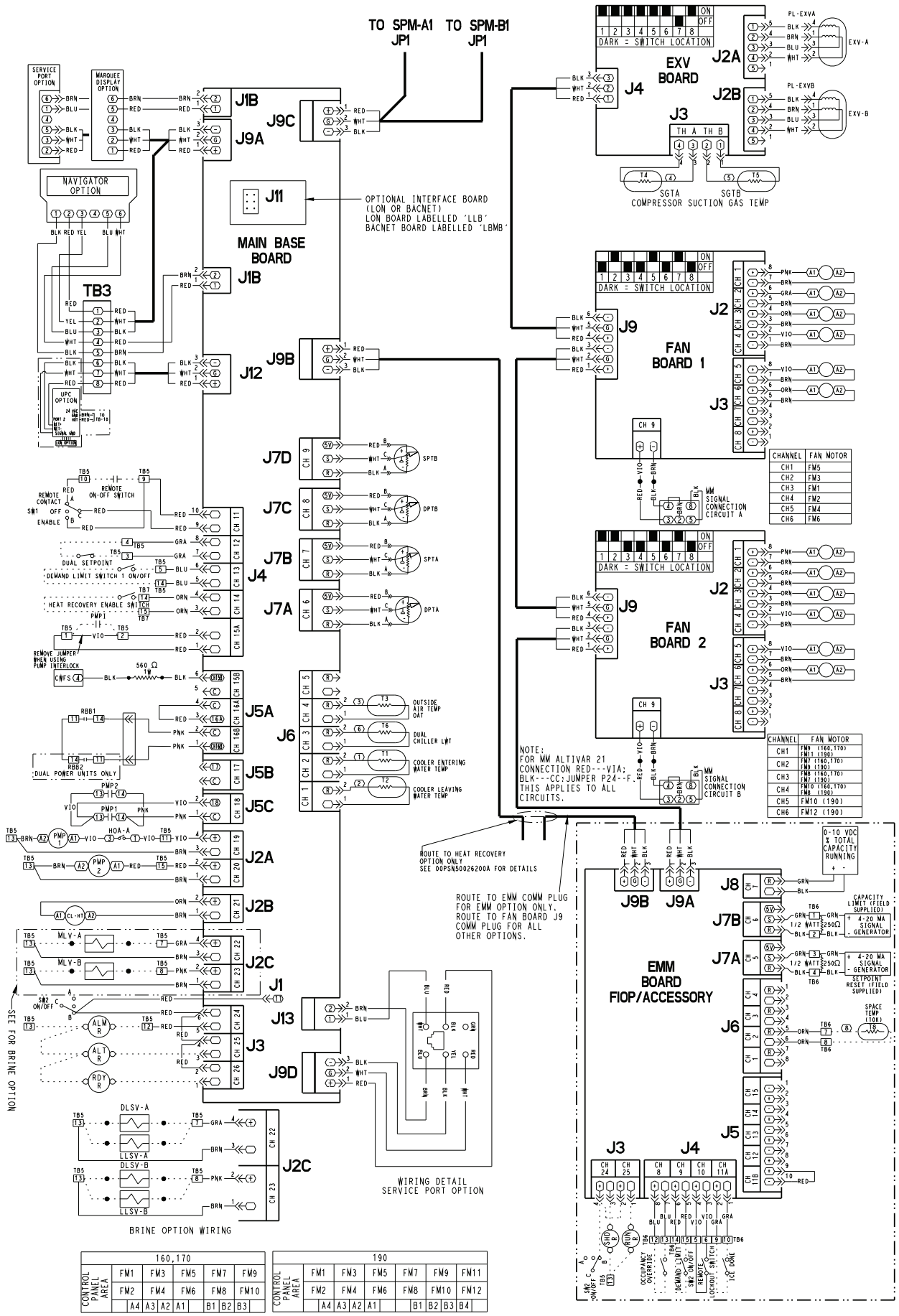

CHANNEL	FAN MOTOR
CH1	FM5
CH2	FM3
CH3	FM1
CH4	FM2
CH5	FM4
CH6	FM6

CHANNEL	FAN MOTOR
CH1	FM9 (160,170) FM11 (190)
CH2	FM7 (160,170) FM9 (190)
CH3	FM8 (160,170) FM7 (190)
CH4	FM10 (160,170) FM8 (190)
CH5	FM10 (190)
CH6	FM12 (190)

160,170									
CONTROL PANEL AREA	FM1	FM3	FM5	FM7	FM9				
	FM2	FM4	FM6	FM8	FM10				
	A4	A3	A2	A1		B1	B2	B3	

190									
CONTROL PANEL AREA	FM1	FM3	FM5	FM7	FM9	FM11			
	FM2	FM4	FM6	FM8	FM10	FM12			
	A4	A3	A2	A1		B1	B2	B3	B4

Fig. 39 — Control Schematic, 30RB160-190

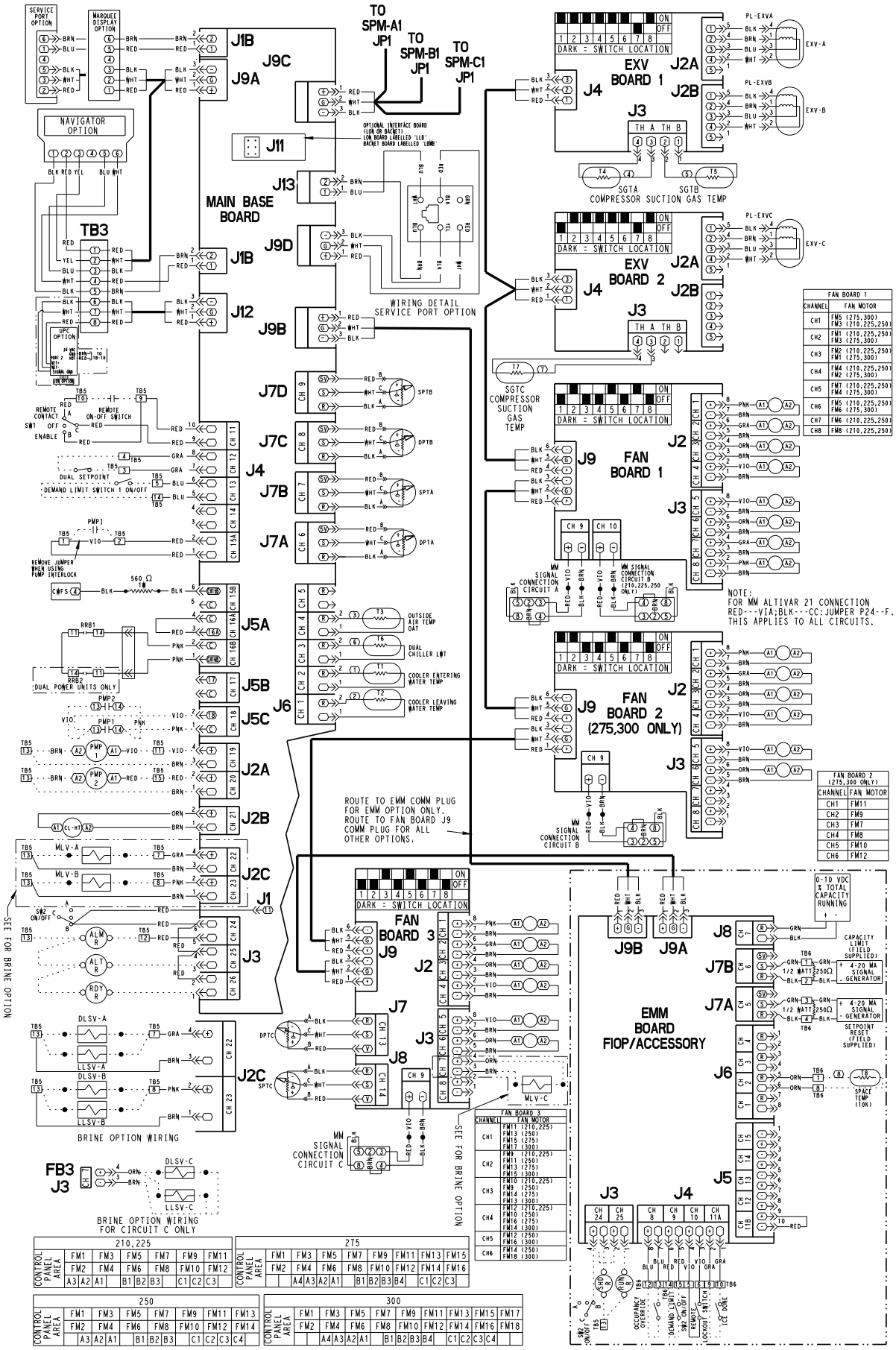

Fig. 40 — Control Schematic, 30RB210-300

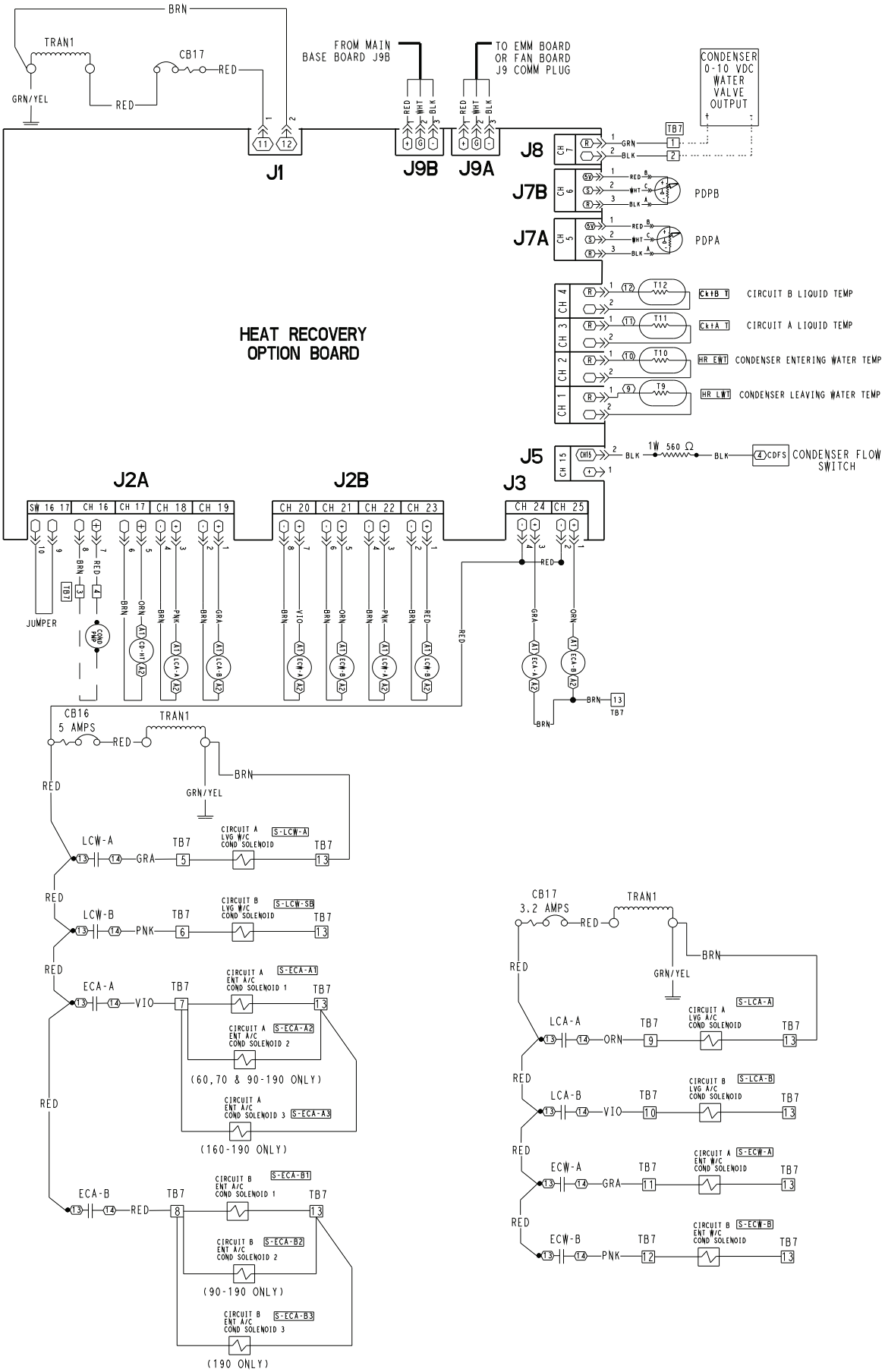

Fig. 41 — Heat Reclaim Control Schematic

APPENDIX A — LOCAL DISPLAY TABLES

MODE — RUN STATUS

ITEM	EXPANSION	UNITS	RANGE	COMMENT	WRITE STATUS	CCN TABLE	CCN POINT	PAGE NO.
VIEW	AUTO VIEW OF RUN STATUS							3,33, 75
→EWT	Entering Fluid Temp	XXXX.X (deg F/deg C)	0-100			STATEGEN	EWT	23
→LWT	Leaving Fluid Temp	XXX.X (deg F/deg C)	0-100			STATEGEN	LWT	23
→SETP	Active Setpoint	XXX.X (deg F/deg C)	0-100			GENUNIT	SP	
→CTPT	Control Point	XXX.X (deg F/deg C)	0-100			GENUNIT	CTRL_PNT	23,44
→STAT	Unit Run Status		0=Off 1=Running 2=Stopping 3=Delay			GENUNIT	STATUS	32,33, 76
→OCC	Occupied		NO/YES			GENUNIT	CHIL_OCC	32
→CTRL	Status Unit Control Typ		0=Local Off 1=Local On 2=CCN 3=Remote			GENUNIT	ctr_type	32
→CAP	Percent Total Capacity	XXX (%)	0-100			GENUNIT	CAP_T	
→CAP.S	Capacity Indicator	XX					over_cap	22
→LIM	Active Demand Limit Val	XXX (%)	0-100			GENUNIT	DEM-LIM	
→STGE	Current Stage	XX					cur_stag	
→ALRM	Alarm State		0=Normal 1=Partial 2=Shutdown			GENUNIT	ALM	
→HC.ST	Heat Cool Status		0=Cooling 1=Heating 2=Standby			GENUNIT	HEATCOOL	23
→RC.ST	Reclaim Select Status		NO/YES			GENUNIT	reclaim_sel	
→TIME	Time of Day	XX.XX	00.00-23.59			N/A	TIME	
→MNTH	Month of Year		1=January 2=February 3=March 4-April 5=May 6=June 7=July 8=August 9=September 10=October 11=November 12=December			N/A	moy	
→DATE	Day of Month	XX	1-31			N/A	dom	
→YEAR	Year of Century	XX	00-99			N/A	yoc	
R.CCN	CCN FOR PRODIALOG							
→CH.SS	CCN Chiller Start Stop		ENBL/DSBL		forcible	GENUNIT	CHIL_S_S	
→HC.SL	Heat Cool Select		0=Cool 1=Heat 2=Auto		forcible	GENUNIT	HC_SEL	68
→C.OCC	Chiller Occupied		NO/YES		forcible	GENUNIT	CHIL_OCC	
→RECL	Reclaim Select		NO/YES		forcible	GENUNIT	RECL_SEL	
→SP.OC	Setpoint Occupied		NO/YES		forcible	GENUNIT	SP_OCC	32
→D.LIM	Active Demand Limit Val	XXX (%)	0-100		forcible	GENUNIT	DEM_LIM	
→CTRL	Control Point	XXX.X (deg F/deg C)	0-100		forcible	GENUNIT	CTRL_PNT	
→EMGY	Emergency Stop		ENBL/DSBL		forcible	GENUNIT	EMSTOP	
RUN	UNIT RUN HOUR AND START							
→HRS.U	Machine Operating Hours	XXXX (hours)	0-999000*		forcible		hr_mach	
→STR.U	Machine Starts	XXXX	0-9999		forcible	STRTHOUR	st_mach	
→HR.P1	Water Pump 1 Run Hours	XXXX (hours)	0-999000*		forcible	FANHOURS	hr_cpum1	
→HR.P2	Water Pump 2 Run Hours	XXXX (hours)	0-999000*		forcible	FANHOURS	hr_cpum2	
→HR.CD	Heat Reclaim Pump Hours	XXXX (hours)			forcible	FANHOURS	hr_hpump	49
HOUR	COMPRESSOR RUN HOURS							
→HR.A1	Compressor A1 Run Hours	XXXX (hours)	0-999000*		forcible	STRTHOUR	hr_cp_a1	
→HR.A2	Compressor A2 Run Hours	XXXX (hours)	0-999000*		forcible	STRTHOUR	hr_cp_a2	
→HR.A3	Compressor A3 Run Hours	XXXX (hours)	0-999000*		forcible	STRTHOUR	hr_cp_a3	
→HR.A4	Compressor A4 Run Hours	XXXX (hours)	0-999000*		forcible	STRTHOUR	hr_cp_a4	
→HR.B1	Compressor B1 Run Hours	XXXX (hours)	0-999000*		forcible	STRTHOUR	hr_cp_b1	
→HR.B2	Compressor B2 Run Hours	XXXX (hours)	0-999000*		forcible	STRTHOUR	hr_cp_b2	
→HR.B3	Compressor B3 Run Hours	XXXX (hours)	0-999000*		forcible	STRTHOUR	hr_cp_b3	
→HR.B4	Compressor B4 Run Hours	XXXX (hours)	0-999000*		forcible	STRTHOUR	hr_cp_b4	
→HR.C1	Compressor C1 Run Hours	XXXX (hours)	0-999000*		forcible	STRTHOUR	hr_cp_c1	
→HR.C2	Compressor C2 Run Hours	XXXX (hours)	0-999000*		forcible	STRTHOUR	hr_cp_c2	
→HR.C3	Compressor C3 Run Hours	XXXX (hours)	0-999000*		forcible	STRTHOUR	hr_cp_c3	
→HR.C4	Compressor C4 Run Hours	XXXX (hours)	0-999000*		forcible	STRTHOUR	hr_cp_c4	
STRT	COMPRESSOR STARTS							
→ST.A1	Compressor A1 Starts	XXXX	0-999000*		forcible	STRTHOUR	st_cp_a1	
→ST.A2	Compressor A2 Starts	XXXX	0-999000*		forcible	STRTHOUR	st_cp_a2	
→ST.A3	Compressor A3 Starts	XXXX	0-999000*		forcible	STRTHOUR	st_cp_a3	
→ST.A4	Compressor A4 Starts	XXXX	0-999000*		forcible	STRTHOUR	st_cp_a4	
→ST.B1	Compressor B1 Starts	XXXX	0-999000*		forcible	STRTHOUR	st_cp_b1	
→ST.B2	Compressor B2 Starts	XXXX	0-999000*		forcible	STRTHOUR	st_cp_b2	
→ST.B3	Compressor B3 Starts	XXXX	0-999000*		forcible	STRTHOUR	st_cp_b3	
→ST.B4	Compressor B4 Starts	XXXX	0-999000*		forcible	STRTHOUR	st_cp_b4	
→ST.C1	Compressor C1 Starts	XXXX	0-999000*		forcible	STRTHOUR	st_cp_c1	
→ST.C2	Compressor C2 Starts	XXXX	0-999000*		forcible	STRTHOUR	st_cp_c2	
→ST.C3	Compressor C3 Starts	XXXX	0-999000*		forcible	STRTHOUR	st_cp_c3	
→ST.C4	Compressor C4 Starts	XXXX	0-999000*		forcible	STRTHOUR	st_cp_c4	

MODE — RUN STATUS (cont)

ITEM	EXPANSION	UNITS	RANGE	COMMENT	WRITE STATUS	CCN TABLE	CCN POINT	PAGE NO.
FAN	FAN RUN HOURS							
→FR.A1	Fan 1 Run Hours Cir A	XXXX (hours)	0-999000*		forcible	FANHOURS	hr_fana1	
→FR.A2	Fan 2 Run Hours Cir A	XXXX (hours)	0-999000*		forcible	FANHOURS	hr_fana2	
→FR.A3	Fan 3 Run Hours Cir A	XXXX (hours)	0-999000*		forcible	FANHOURS	hr_fana3	
→FR.A4	Fan 4 Run Hours Cir A	XXXX (hours)	0-999000*		forcible	FANHOURS	hr_fana4	
→FR.A5	Fan 5 Run Hours Cir A	XXXX (hours)	0-999000*		forcible	FANHOURS	hr_fana5	
→FR.A6	Fan 6 Run Hours Cir A	XXXX (hours)	0-999000*		forcible	FANHOURS	hr_fana6	
→FR.B1	Fan 1 Run Hours Cir B	XXXX (hours)	0-999000*		forcible	FANHOURS	hr_fanb1	
→FR.B2	Fan 2 Run Hours Cir B	XXXX (hours)	0-999000*		forcible	FANHOURS	hr_fanb2	
→FR.B3	Fan 3 Run Hours Cir B	XXXX (hours)	0-999000*		forcible	FANHOURS	hr_fanb3	
→FR.B4	Fan 4 Run Hours Cir B	XXXX (hours)	0-999000*		forcible	FANHOURS	hr_fanb4	
→FR.B5	Fan 5 Run Hours Cir B	XXXX (hours)	0-999000*		forcible	FANHOURS	hr_fanb5	
→FR.B6	Fan 6 Run Hours Cir B	XXXX (hours)	0-999000*		forcible	FANHOURS	hr_fanb6	
→FR.C1	Fan 1 Run Hours Cir C	XXXX (hours)	0-999000*		forcible	FANHOURS	hr_fanc1	
→FR.C2	Fan 2 Run Hours Cir C	XXXX (hours)	0-999000*		forcible	FANHOURS	hr_fanc2	
→FR.C3	Fan 3 Run Hours Cir C	XXXX (hours)	0-999000*		forcible	FANHOURS	hr_fanc3	
→FR.C4	Fan 4 Run Hours Cir C	XXXX (hours)	0-999000*		forcible	FANHOURS	hr_fanc4	
→FR.C5	Fan 5 Run Hours Cir C	XXXX (hours)	0-999000*		forcible	FANHOURS	hr_fanc5	
→FR.C6	Fan 6 Run Hours Cir C	XXXX (hours)	0-999000*		forcible	FANHOURS	hr_fanc6	
CP.UN	COMPRESSOR DISABLE							
→A1.UN	Compressor A1 Disable		NO/YES		forcible	CP_UNABL	un_cp_a1	
→A2.UN	Compressor A2 Disable		NO/YES		forcible	CP_UNABL	un_cp_a2	
→A3.UN	Compressor A3 Disable		NO/YES		forcible	CP_UNABL	un_cp_a3	
→A4.UN	Compressor A4 Disable		NO/YES		forcible	CP_UNABL	un_cp_a4	
→B1.UN	Compressor B1 Disable		NO/YES		forcible	CP_UNABL	un_cp_b1	
→B2.UN	Compressor B2 Disable		NO/YES		forcible	CP_UNABL	un_cp_b2	
→B3.UN	Compressor B3 Disable		NO/YES		forcible	CP_UNABL	un_cp_b3	
→B4.UN	Compressor B4 Disable		NO/YES		forcible	CP_UNABL	un_cp_b4	
→C1.UN	Compressor C1 Disable		NO/YES		forcible	CP_UNABL	un_cp_c1	
→C2.UN	Compressor C2 Disable		NO/YES		forcible	CP_UNABL	un_cp_c2	
→C3.UN	Compressor C3 Disable		NO/YES		forcible	CP_UNABL	un_cp_c3	
→C4.UN	Compressor C4 Disable		NO/YES		forcible	CP_UNABL	un_cp_c4	
MAIN	PREDICTIVE MAINTENANCE							
→CHRG	Refrigerant Charge		NO/YES			SERMAINT	charge_m	
→WATE	Water Loop Size		NO/YES			SERMAINT	wloop_m	
→PMP.1	Pump 1 (days)	(days)				SERMAINT	cpump1_m	
→PMP.2	Pump 2 (days)	(days)				SERMAINT	cpump2_m	
→PMP.C	Cond Pump (days)	(days)				SERMAINT	hpump_m	
→W.FIL	Water Filter (days)	(days)				SERMAINT	wfilte_m	
VERS	SOFTWARE VERSION NUMBER			Press ENTER and ESCAPE simultaneously to read version information				
→APPL	CSA-XX-XXXXXXXXX						PD5_APPL	
→MARQ	XXXXXX-XX-XX						STDU	
→NAVI	XXXXXX-XX-XX						Navigator	
→EXV1	XXXXXX-XX-XX						EXV_BRD1	
→EXV2	XXXXXX-XX-XX						EXV_BRD2	
→AUX1	XXXXXX-XX-XX						AUX_BRD1	
→AUX2	XXXXXX-XX-XX						AUX_BRD2	
→AUX3	XXXXXX-XX-XX						AUX_BRD3	
→AUX4	XXXXXX-XX-XX						AUX_BRD4	
→AUX5	XXXXXX-XX-XX						AUX_BRD5	
→CPA1	XXXXXX-XX-XX						SPM_CPA1	
→CPA2	XXXXXX-XX-XX						SPM_CPA2	
→CPA3	XXXXXX-XX-XX						SPM_CPA3	
→CPA4	XXXXXX-XX-XX						SPM_CPA4	
→CPB1	XXXXXX-XX-XX						SPM_CPB1	
→CPB2	XXXXXX-XX-XX						SPM_CPB2	
→CPB3	XXXXXX-XX-XX						SPM_CPB3	
→CPB4	XXXXXX-XX-XX						SPM_CPB4	
→CPC1	XXXXXX-XX-XX						SPM_CPC1	
→CPC2	XXXXXX-XX-XX						SPM_CPC2	
→CPC3	XXXXXX-XX-XX						SPM_CPC3	
→CPC4	XXXXXX-XX-XX						SPM_CPC4	
→EMM	XXXXXX-XX-XX						EMM_NRCP	

*As data in all of these categories can exceed 9999 the following display strategy is used:
From 0-9999 display as 4 digits.
From 9999-99900 display xx.xK
From 99900-999000 display as xxxK.

MODE — SERVICE TEST

ITEM	EXPANSION	UNITS	RANGE	COMMENT	WRITE STATUS	CCN TABLE	CCN POINT	PAGE NO.
TEST	COMPRESSORS					N/A		
→T.REQ	Manual Sequence		OFF/ON*		forcible	N/A	service_test	51,74
→CP.A1	Compressor A1 Output		OFF/ON		forcible	N/A	comp_serv_a_1	51
→CP.A2	Compressor A2 Output		OFF/ON		forcible	N/A	comp_serv_a_2	51
→CP.A3	Compressor A3 Output		OFF/ON		forcible	N/A	comp_serv_a_3	51
→CP.A4	Compressor A4 Output		OFF/ON		forcible	N/A	comp_serv_a_4	51
→HGB.A	Hot Gas Bypass A Output		OFF/ON		forcible	N/A	hgbp_serv_a	
→CP.B1	Compressor B1 Output		OFF/ON		forcible	N/A	comp_serv_b_1	51
→CP.B2	Compressor B2 Output		OFF/ON		forcible	N/A	comp_serv_b_2	51
→CP.B3	Compressor B3 Output		OFF/ON		forcible	N/A	comp_serv_b_3	51
→CP.B4	Compressor B4 Output		OFF/ON		forcible	N/A	comp_serv_b_4	51
→HGB.B	Hot Gas Bypass B Output		OFF/ON		forcible	N/A	hgbp_serv_b	
→CP.C1	Compressor C1 Output		OFF/ON		forcible	N/A	comp_serv_c_1	51
→CP.C2	Compressor C2 Output		OFF/ON		forcible	N/A	comp_serv_c_2	51
→CP.C3	Compressor C3 Output		OFF/ON		forcible	N/A	comp_serv_c_3	51
→CP.C4	Compressor C4 Output		OFF/ON		forcible	N/A	comp_serv_c_4	51
→HGB.C	Hot Gas Bypass C Output		OFF/ON		forcible	N/A	hgbp_serv_c	
QUIC	QUICK TEST MODE					N/A		51
→Q.REQ	Quick Test Mode		OFF/ON†		forcible	N/A	test_request	75
→EXV.A	Circuit A EXV % Open	XXX (%)	0-100		forcible	N/A	exv_qck_a	50,51
→EXV.B	Circuit B EXV % Open	XXX (%)	0-100		forcible	N/A	exv_qck_b	50,51
→EXV.C	Circuit C EXV % Open	XXX (%)	0-100		forcible	N/A	exv_qck_c	50,51
→FAN.A	Circuit A Fan Stages	X	0-6		forcible	N/A	fan_qck_a	
→FAN.B	Circuit B Fan Stages	X	0-6		forcible	N/A	fan_qck_b	
→FAN.C	Circuit C Fan Stages	X	0-6		forcible	N/A	fan_qck_c	
→SPD.A	Circ A Varifan position	XXX (%)	0-100		forcible	N/A	hd_qck_a	
→SPD.B	Circ B Varifan position	XXX (%)	0-100		forcible	N/A	hd_qck_b	
→SPD.C	Circ C Varifan position	XXX (%)	0-100		forcible	N/A	hd_qck_c	
→FRV.A	Free Cooling Valve A		OPEN/CLSE	Not supported.	forcible	N/A	fr_qck_1a	
→FRP.A	Refrigerant Pump Out A		OFF/ON	Not supported.	forcible	N/A	fr_qck_2a	
→FRV.B	Free Cooling Valve B		OPEN/CLSE	Not supported.	forcible	N/A	fr_qck_1b	
→FRP.B	Refrigerant Pump Out B		OFF/ON	Not supported.	forcible	N/A	fr_qck_2b	
→FRV.C	Free Cooling Valve C		OPEN/CLSE	Not supported.	forcible	N/A	fr_qck_1c	
→FRP.C	Refrigerant Pump Out C		OFF/ON	Not supported.	forcible	N/A	fr_qck_2c	
→RV.A	4 Way Valve Circuit A		OPEN/CLSE	Not supported.	forcible	N/A	rv_qck_a	
→RV.B	4 Way Valve Circuit B		OPEN/CLSE	Not supported.	forcible	N/A	rv_qck_b	
→BOIL	Boiler Command		OFF/ON	Not supported.	forcible	N/A	boiler_qck	
→HR1.A	Air Cond Enter Valve A		OPEN/CLSE		forcible	N/A	hr_ea_qck_a	
→HR2.A	Air Cond Leaving Valv A		OPEN/CLSE		forcible	N/A	hr_la_qck_a	
→HR3.A	Water Cond Enter Valv A		OPEN/CLSE		forcible	N/A	hr_ew_qck_a	
→HR4.A	Water Cond Leav Valve A		OPEN/CLSE		forcible	N/A	hr_lw_qck_a	
→HR1.B	Air Cond Enter Valve B		OPEN/CLSE		forcible	N/A	hr_ea_qck_b	
→HR2.B	Air Cond Leaving Valv B		OPEN/CLSE		forcible	N/A	hr_la_qck_b	
→HR3.B	Water Cond Enter Valv B		OPEN/CLSE		forcible	N/A	hr_ew_qck_b	
→HR4.B	Water Cond Leav Valve B		OPEN/CLSE		forcible	N/A	hr_lw_qck_b	
→PMP.1	Water Exchanger Pump 1		OFF/ON		forcible	N/A	cpump_qck1	
→PMP.2	Water Exchanger Pump 2		OFF/ON		forcible	N/A	cpump_qck2	
→CND.P	Reclaim Condenser Pump		OFF/ON		forcible	N/A	cond_pump_qck	
→CL.HT	Cooler Heater Output		OFF/ON		forcible	N/A	coo_heat_qck	
→CP.HT	Condenser Heater Output		OFF/ON		forcible	N/A	cond_htr_qck	
→CH.A1	Compressor A1 Heater		OFF/ON		forcible	N/A	cp_ht_qck_a1	
→CH.A2	Compressor A2 Heater		OFF/ON		forcible	N/A	cp_ht_qck_a2	
→CH.A3	Compressor A3 Heater		OFF/ON		forcible	N/A	cp_ht_qck_a3	
→CH.A4	Compressor A4 Heater		OFF/ON		forcible	N/A	cp_ht_qck_a4	
→CH.B1	Compressor B1 Heater		OFF/ON		forcible	N/A	cp_ht_qck_b1	
→CH.B2	Compressor B2 Heater		OFF/ON		forcible	N/A	cp_ht_qck_b2	
→CH.B3	Compressor B3 Heater		OFF/ON		forcible	N/A	cp_ht_qck_b3	
→CH.B4	Compressor B4 Heater		OFF/ON		forcible	N/A	cp_ht_qck_b4	
→CH.C1	Compressor C1 Heater		OFF/ON		forcible	N/A	cp_ht_qck_c1	
→CH.C2	Compressor C2 Heater		OFF/ON		forcible	N/A	cp_ht_qck_c2	
→CH.C3	Compressor C3 Heater		OFF/ON		forcible	N/A	cp_ht_qck_c3	
→CH.C4	Compressor C4 Heater		OFF/ON		forcible	N/A	cp_ht_qck_c4	
→HGB.A	Hot Gas Bypass A Output		OFF/ON		forcible	N/A		
→HGB.B	Hot Gas Bypass B Output		OFF/ON		forcible	N/A		
→HGB.C	Hot Gas Bypass C Output		OFF/ON		forcible	N/A		
→Q.RDY	Chiller Ready Status		OFF/ON		forcible	N/A	ready_qck	
→Q.RUN	Chiller Running Status		OFF/ON	EMM	forcible	N/A	running_qck	
→SHUT	Customer Shutdown Stat		OFF/ON	EMM	forcible	N/A	shutdown_qck	
→CATO	Chiller Capacity 0-10v	XX.X (vdc)	0-100	EMM	forcible	N/A	CAPT_010_qcK	
→ALRM	Alarm Relay		OFF/ON		forcible	N/A	alarm_qck	
→ALRT	Alert Relay		OFF/ON		forcible	N/A	alert_qck	
→C.ALM	Critical Alarm Relay		OFF/ON	Not supported.	forcible	N/A	critical_qck	

*Place the Enable/Off/Remote Contact switch to the Off position prior to configuring ***T.REQ*** to ON. Configure the desired item to ON, then place the Enable/Off/Remote Contact switch to the Enable position.

†Place the Enable/Off/Remote Contact switch to the Off position prior to configuring ***Q.REQ*** to ON. The switch should be in the Off position to perform Quick Test.

MODE — TEMPERATURE

ITEM	EXPANSION	UNITS	RANGE	COMMENT	WRITE STATUS	CCN TABLE	CCN POINT	PAGE NO.
UNIT	ENT AND LEAVE UNIT TEMP							
→EWT	Water Exchanger Enter	XXX.X (deg F/deg C)	–45-245 F (–43-118 C)			STATEGEN	EWT	6,46
→LWT	Water Exchanger Leaving	XXX.X (deg F/deg C)	–45-245 F (–43-118 C)			STATEGEN	LWT	6,46
→OAT	Outside Air Temperature	XXX.X (deg F/deg C)	–45-245 F (–43-118 C)			GENUNIT	OAT	6,46
→CHWS	Lead/Lag Leaving Fluid	XXX.X (deg F/deg C)	–45-245 F (–43-118 C)			STATEGEN	CHWS TEMP	6
→HEWT	Heat Reclaim Entering	XXX.X (deg F/deg C)				RECLAIM	HR_EWT	16,49
→HLWT	Heat Reclaim Leaving	XXX.X (deg F/deg C)				RECLAIM	HR_LWT	16,49
→SPT	Optional Space Temp	XXX.X (deg F/deg C)	–45-245 F (–43-118 C)			STATEGEN	SPACETMP	15
CIR.A	TEMPERATURES CIRCUIT A							
→SCT.A	Sat Cond Temp Circ A	XXX.X (deg F/deg C)	–45-245 F (–43-118 C)			CIRCA_AN	SCT_A	
→SST.A	Sat Suction Temp Circ A	XXX.X (deg F/deg C)	–45-245 F (–43-118 C)			CIRCA_AN	SST_A	
→SGT.A	Suction Gas Temp Circ A	XXX.X (deg F/deg C)	–45-245 F (–43-118 C)			CIRCA_AN	SUCT_T_A	8
→SUP.A	Superheat Temp Circ A	XXX.X (ΔF/ΔC)				CIRCA_AN	SH_A	
→HRT.A	Sub Condenser Gas Tmp A	XXX.X (deg F/deg C)	–45-245 F (–43-118 C)			RECLAIM	hr_subta	16
→HRS.A	Sub Cooling Temp A	XXX.X (ΔF/ΔC)				RECLAIM	hr_subca	16
CIR.B	TEMPERATURES CIRCUIT B							
→SCT.B	Sat Cond Temp Circ B	XXX.X (deg F/deg C)	–45-245 F (–43-118 C)			CIRCB_AN	SCT_B	
→SST.B	Sat Suction Temp Circ B	XXX.X (deg F/deg C)	–45-245 F (–43-118 C)			CIRCB_AN	SST_B	
→SGT.B	Suction Gas Temp Circ B	XXX.X (deg F/deg C)	–45-245 F (–43-118 C)			CIRCB_AN	SUCT_T_B	8
→SUP.B	Superheat Temp Circ B	XXX.X (ΔF/ΔC)				CIRCB_AN	SH_B	
→HRT.B	Sub Condenser Gas Tmp B	XXX.X (deg F/deg C)	–45-245 F (–43-118 C)			RECLAIM	hr_subtb	16
→HRS.B	Sub Cooling Temp B	XXX.X (ΔF/ΔC)				RECLAIM	hr_subcb	16
CIR.C	TEMPERATURES CIRCUIT C					CIRCC_AN		
→SCT.C	Sat Cond Temp Circ C	XXX.X (deg F/deg C)	–45-245 F (–43-118 C)			CIRCC_AN	SCT_C	
→SST.C	Sat Suction Temp Circ C	XXX.X (deg F/deg C)	–45-245 F (–43-118 C)			CIRCC_AN	SST_C	
→SGT.C	Suction Gas Temp Circ C	XXX.X (deg F/deg C)	–45-245 F (–43-118 C)			CIRCC_AN	SUCT_T_C	10
→SUP.C	Superheat Temp Circ C	XXX.X (ΔF/ΔC)				CIRCC_AN	SH_C	

MODE — PRESSURE

ITEM	EXPANSION	UNITS	RANGE	COMMENT	WRITE STATUS	CCN TABLE	CCN POINT	PAGE NO.
PRC.A	PRESSURE CIRCUIT A							
→DP.A	Discharge Pressure Cir A	XXX.X (psig/kPa)				CIRCA_AN	DP_A	6,48
→SP.A	Suction Pressure Circ A	XXX.X (psig/kPa)				CIRCA_AN	SP_A	6
→PD.A	Pumpdown Pressure Cir A	XXX.X (psig/kPa)				RECLAIM	PD_P_A	16
PRC.B	PRESSURE CIRCUIT B							
→DP.B	Discharge Pressure Cir B	XXX.X (psig/kPa)				CIRCB_AN	DP_B	6,48
→SP.B	Suction Pressure Circ B	XXX.X (psig/kPa)				CIRCB_AN	SP_B	6
→PD.B	Pumpdown Pressure Cir B	XXX.X (psig/kPa)				RECLAIM	PD_P_B	16
PRC.C	PRESSURE CIRCUIT C							
→DP.C	Discharge Pressure Cir C	XXX.X (psig/kPa)				CIRCC_AN	DP_C	14,48
→SP.C	Suction Pressure Circ C	XXX.X (psig/kPa)				CIRCC_AN	SP_C	14
→PD.C	Pumpdown Pressure Cir C	XXX.X (psig/kPa)				RECLAIM	PD_P_C	

MODE — SET POINTS

ITEM	EXPANSION	UNITS	RANGE	COMMENT	WRITE STATUS	CCN TABLE	CCN POINT	PAGE NO.
COOL	COOLING SETPOINTS							
→CSP.1	Cooling Setpoint 1	XXXX.X (deg F/deg C)	–20-70 F (–29-21 C), Default = 44.0		forcible	SETPOINT	csp1	32,33, 44
→CSP.2	Cooing Setpoint 2	XXXX.X (deg F/deg C)	–20-70 F (–29-21 C), Default = 44.0		forcible	SETPOINT	csp2	32,33
→CSP.3	Ice Setpoint	XXXX.X (deg F/deg C)	–20-70 F (–29-21 C), Default = 44.0		forcible	SETPOINT	ice_sp	32,33, 48
→CRV1	Current No Reset Val	XX.X (mA)	0-20, Default = 0		forcible	SETPOINT	v_cr_no	38
→CRV2	Current Full Reset Val	XX.X (mA)	0-20, Default = 0		forcible	SETPOINT	v_cr_fu	38
→CRT1	Delta T No Reset Temp	XXX.X (ΔF/ΔC)	0-125 F (0-69.4 C), Default = 0		forcible	SETPOINT	dt_cr_no	33
→CRT2	Delta T Full Reset Temp	XXX.X (ΔF/ΔC)	0-125 F (0-69.4 C), Default = 0		forcible	SETPOINT	dt_cr_fu	33
→CRO1	OAT No Reset Temp	XXX.X (deg F/deg C)	0-125 F (–18-52 C), Default = 14.0		forcible	SETPOINT	oatcr_no	34
→CRO2	OAT Full Reset Temp	XXX.X (deg F/deg C)	0-25 F (–18-52 C), Default = 14.0		forcible	SETPOINT	oatcr_fu	34
→CRS1	Space T No Reset Temp	XXX.X (deg F/deg C)	0-125 F (–18-52 C), Default = 14.0		forcible	SETPOINT	spacr_no	38
→CRS2	Space T Full Reset Temp	XXX.X (deg F/deg C)	0-125 F (–18-52 C), Default = 14.0		forcible	SETPOINT	spacr_fu	38
→DGRC	Degrees Cool Reset	XX.X (ΔF/ΔC)	–30-30 F (–16.7-16.7 C), Default = 0		forcible	SETPOINT	cr_deg	33,34, 38
→CAUT	Cool Changeover Setpt	XX.X (deg F/deg C)	Default = 75.0	Not supported.	forcible	SETPOINT	cauto_sp	
→CRMP	Cool Ramp Loading	X.X	0.2-2.0 F (0.1-1.1 C), Default = 1.0		forcible		cramp_sp	17,23, 46
HEAT	HEATING SETPOINTS							
→HSP.1	Heating Setpoint 1	XXX.X (deg F/deg C)	Default = 100	Not supported.	forcible	SETPOINT	HSP.1	
→HSP.2	Heating Setpoint 2	XXX.X (deg F/deg C)	Default = 100	Not supported.	forcible	SETPOINT	HSP.2	
→HRV1	Current No Reset Val	XX.X (mA)	Default = 0	Not supported.	forcible	SETPOINT	v_hr_no	
→HRV2	Current Full Reset Val	XX.X (mA)	Default = 0	Not supported.	forcible	SETPOINT	v_hr_fu	
→HRT1	Delta T No Reset Temp	XXX.X (ΔF/ΔC)	Default = 0	Not supported.	forcible	SETPOINT	dt_hr_no	
→HRT2	Delta T Full Reset Temp	XXX.X (ΔF/ΔC)	Default = 0	Not supported.	forcible	SETPOINT	dt_hr_fu	
→HRO1	OAT No Reset Temp	XXX.X (deg F/deg C)	Default = 14.0	Not supported.	forcible	SETPOINT	oathr_no	
→HRO2	OAT Full Reset Temp	XXX.X (deg F/deg C)	Default = 14.0	Not supported.	forcible	SETPOINT	oathr_fu	
→DGRH	Degrees Heat Reset	XX.X (ΔF/ΔC)	Default = 0	Not supported.	forcible	SETPOINT	DGRH	
→HAUT	Heat Changeover Setpt	XX.X (deg F/deg C)	Default = 64	Not supported.	forcible	SETPOINT	hauto_sp	
→HRMP	Heat Ramp Loading	X.X	Default = 1.0	Not supported.	forcible	SETPOINT	hramp_sp	
MISC	MISCELLANEOUS SETPOINTS							
→DLS1	Switch Limit Setpoint 1	XXX (%)	0-100, Default = 100		forcible	SETPOINT	lim_sp1	41
→DLS2	Switch Limit Setpoint 2	XXX (%)	0-100, Default = 100		forcible	SETPOINT	lim_sp2	41
→DLS3	Switch Limit Setpoint 3	XXX (%)	0-100, Default = 100		forcible	SETPOINT	lim_sp3	
→RSP	Heat Reclaim Setpoint	XXX.X (deg F/deg C)	Default = 122		forcible	SETPOINT	rsp	49
→RDB	Reclaim Deadband	XX.X (ΔF/ΔC)	Default = 9.0		forcible	SETPOINT	hr_deadb	49

MODE — INPUTS

ITEM	EXPANSION	UNITS	RANGE	COMMENT	WRITE STATUS	CCN TABLE	CCN POINT	PAGE NO.
GEN.I	GENERAL INPUTS							
→ONOF	On Off Switch		OPEN/CLSE			STATEGEN	ONOF	6
→LOCK	Cooler Interlock		OPEN/CLSE			STATEGEN	LOCK_1	6,23
→DLS1	Demand Limit Switch 1		OPEN/CLSE			STATEGEN	LIM_SW1	6
→DLS2	Demand Limit Switch 2		OPEN/CLSE			STATEGEN	LIM_SW2	15
→ICE.D	Ice Done		OFF/ON			STATEGEN	ICE_SW	15,32
→DUAL	Dual Setpoint Switch		OFF/ON			STATEGEN	SETP_SW	6
→ELEC	Electrical Box Safety		OPEN/CLSE			STATEGEN	ELEC_BOX	6
→PUMP	Pump Run Feedback		OFF/ON			STATEGEN	PUMP_DEF	6
→OCCS	Occupancy Override Swit		OFF/ON			STATEGEN	OCC_OVSW	15
→RECL	Heat Reclaim Switch		OFF/ON			STATEGEN	RECL_SW	49
→HC.SW	Heat Cool Switch Status		OFF/ON			STATEGEN	HC_SW	
→RLOC	Remote Interlock Switch		OPEN/CLSE			STATEGEN	REM-LOCK	15
→C.FLO	Reclaim Cond Flow		OPEN/CLSE			STATEGEN	CONDFLOW	16
→DMND	4-20 mA Demand Signal	XXX.X (mA)	4 to 20			STATEGEN	LIM_ANAL	15
→RSET	4-20 mA Reset/Setpoint	XXX.X (mA)	4 to 20			STATEGEN	SP_RESET	15

MODE — OUTPUTS

ITEM	EXPANSION	UNITS	RANGE	COMMENT	WRITE STATUS	CCN TABLE	CCN POINT	PAGE NO.
CIR.A	OUTPUTS CIRCUIT A							
→***CP.A1***	Compressor A1 Relay	OFF/ON				CIRCA_D	CP_A1	8
→***CP.A2***	Compressor A2 Relay	OFF/ON				CIRCA_D	CP_A2	8
→***CP.A3***	Compressor A3 Relay	OFF/ON				CIRCA_D	CP_A3	8
→***CP.A4***	Compressor A4 Relay	OFF/ON				CIRCA_D	CP_A4	8
→***HGB.A***	Hot Gas Bypass Circ A	OFF/ON				CIRCA_D	HGBP_A	6
→***HT.A1***	Comp A1 Heater Relay	OFF/ON				CIRCA_D	cp_a1_ht	8
→***HT.A2***	Comp A2 Heater Relay	OFF/ON				CIRCA_D	cp_a2_ht	8
→***HT.A3***	Comp A3 Heater Relay	OFF/ON				CIRCA_D	cp_a3_ht	8
→***HT.A4***	Comp A4 Heater Relay	OFF/ON				CIRCA_D	cp_a4_ht	8
→***FAN.A***	Circuit A Fan Stages	X	0-6			CIRCA_D	FAN_ST_A	
→***SPD.A***	Circ A Varifan Position	XXX (%)	0-100			CIRCA_AN	hd_pos_a	11
→***EXV.A***	Circuit A EXV % Open	XXX (%)	0-100			CIRCA_AN	EXV_A	8
→***FRP.A***	Refrigerant Pump Out A	OFF/ON		Not supported.		CIRCA_D	FR_PMP_A	
→***FRVA***	Free Cooling Valve A	OPEN/CLSE		Not supported.		CIRCA_D	FR_VLV_A	
→***HR1.A***	Air Cond Enter Valve A	OPEN/CLSE				RECLAIM	hr_ca_a	16
→***HR2.A***	Air Cond Leaving Valv A	OPEN/CLSE				RECLAIM	hr_la_a	16
→***HR3.A***	Water Cond Enter Valv A	OPEN/CLSE				RECLAIM	hr_en_a	16
→***HR4.A***	Water Cond Leav Valve A	OPEN/CLSE				RECLAIM	hr_lw_a	16
→***RV.A***	4 Way Valve Circuit A	OPEN/CLSE		Not supported.		CIRCA_D	RV_A	
CIR.B	OUTPUTS CIRCUIT B							
→***CP.B1***	Compressor B1 Relay	OFF/ON				CIRCB_D	CP_B1	8
→***CP.B2***	Compressor B2 Relay	OFF/ON				CIRCB_D	CP_B2	8
→***CP.B3***	Compressor B3 Relay	OFF/ON				CIRCB_D	CP_B3	8
→***CP.B4***	Compressor B4 Relay	OFF/ON				CIRCB_D	CP_B4	8
→***HGB.B***	Hot Gas Bypass Circ B	OFF/ON				CIRCB_D	HGBP_B	6
→***HT.B1***	Comp B1 Heater Relay	OFF/ON				CIRCB_D	CP_HT_B1	8
→***HT.B2***	Comp B2 Heater Relay	OFF/ON				CIRCB_D	CP_HT_B2	8
→***HT.B3***	Comp B3 Heater Relay	OFF/ON				CIRCB_D	CP_HT_B3	8
→***HT.B4***	Comp B4 Heater Relay	OFF/ON				CIRCB_D	CP_HT_B4	8
→***FAN.B***	Circuit B Fan Stages	X	0-6			CIRCB_D	FAN_ST_B	
→***SPD.B***	Circ B Varifan Position	XXX (%)	0-100			CIRCB_AN	hd_pos_b	11,12
→***EXV.B***	Circuit B EXV % Open	XXX (%)	0-100			CIRCB_AN	EXV_B	8
→***FRP.B***	Refrigerant Pump Out B	OFF/ON		Not supported.		CIRCB_D	FR_PMP_B	
→***FRVB***	Free Cooling Valve B	OPEN/CLSE		Not supported.		CIRCA_D	FR_VLV_B	
→***HR1.B***	Air Cond Enter Valve B	OPEN/CLSE				RECLAIM	hr_ca_b	16
→***HR2.B***	Air Cond Leaving Valv B	OPEN/CLSE				RECLAIM	hr_la_b	16
→***HR3.B***	Water Cond Enter Valv B	OPEN/CLSE				RECLAIM	hr_en_b	16
→***HR4.B***	Water Cond Leav Valve B	OPEN/CLSE				RECLAIM	hr_lw_b	16
→***RV.B***	4 Way Valve Circuit B	OPEN/CLSE		Not supported.		CIRCB_D	RV_B	
CIR.C	OUTPUTS CIRCUIT C							
→***CP.C1***	Compressor C1 Relay	OFF/ON				CIRCC_D	CP_C1	8
→***CP.C2***	Compressor C2 Relay	OFF/ON				CIRCC_D	CP_C2	8
→***CP.C3***	Compressor C3 Relay	OFF/ON				CIRCC_D	CP_C3	8
→***CP.C4***	Compressor C4 Relay	OFF/ON				CIRCC_D	CP_C4	8
→***HGB.C***	Hot Gas Bypass Circ C	OFF/ON				CIRCC_D	HGBP_C	14
→***HT.C1***	Comp C1 Heater Relay	OFF/ON				CIRCC_D	cp_c1_ht	8
→***HT.C2***	Comp C2 Heater Relay	OFF/ON				CIRCC_D	cp_c2_ht	8
→***HT.C3***	Comp C3 Heater Relay	OFF/ON				CIRCC_D	cp_c3_ht	8
→***HT.C4***	Comp C4 Heater Relay	OFF/ON				CIRCC_D	cp_c4_ht	8
→***FAN.C***	Circuit C Fan Stages	X	0-6			CIRCC_D	FAN_ST_C	
→***SPD.C***	Circ C Varifan Position	XXX (%)	0-100			CIRCC_AN	hd_pos_c	14
→***EXV.C***	Circuit C EXV % Open	XXX (%)	0-100			CIRCC_AN	EXV_C	10
→***FRP.C***	Refrigerant Pump Out C	OFF/ON		Not supported.		CIRCC_D	FR_PMP_C	
→***FRVC***	Free Cooling Valve C	OPEN/CLSE		Not supported.		CIRCC_D	FR_VLV_C	
GEN.O	GENERAL OUTPUTS							
→***PMP.1***	Water Exchanger Pump 1	OFF/ON				STATEGEN	CPUMP_1	6
→***PMP.2***	Water Exchanger Pump 2	OFF/ON				STATEGEN	CPUMP_2	6
→***CND.P***	Reclaim Condenser Pump	OFF/ON				STATEGEN	COND_PUMP	16
→***CO.HT***	Cooler Heater Output	OFF/ON				STATEGEN	COOLHEAT	6
→***CN.HT***	Condenser Heater Output	OFF/ON				RECLAIM	cond_htr	16
→***REDY***	Chiller Ready Status	OFF/ON			forcible	RECLAIM	READY	6
→***RUN***	Chiller Running Status	OFF/ON			forcible	STATEGEN	RUNNING	15
→***SHUT***	Customer Shutdown Stat	OFF/ON			forcible	STATEGEN	SHUTDOWN	15
→***CATO***	Chiller Capacity 0-10 v	XX.X			forcible	STATEGEN	CAPT_010	15
→***ALRM***	Alarm Relay	OFF/ON				STATEGEN	ALARM	6
→***ALRT***	Alert Relay	OFF/ON				STATEGEN	ALERT	6
→***BOIL***	Boiler Command	OFF/ON		Not supported.		STATEGEN	BOILER	
→***C.ALM***	Critical Alarm Relay	OFF/ON			forcible	STATEGEN	critical_qck	

MODE — CONFIGURATION

ITEM	EXPANSION	UNITS	RANGE	COMMENT	WRITE STATUS	DEFAULT	CCN TABLE	CCN POINT	PAGE NO.
DISP	DISPLAY CONFIGURATION								
→TEST	Test Display LED's		OFF/ON			OFF	N/A	display_test	
→METR	Metric Display		US/METR			US	DISPCONF	DISPUNIT	
→LANG	Language Selection		0=English 1=Espanol 2=Francais 3=Portugues 4=Translated			0	DISPCONF	LANGUAGE	
UNIT	UNIT CONFIGURATION								
→TYPE	Unit Type		1=Air Cooled 2=Heat Pump	Heat pump not supported		1	FACTORY	unit_typ	
→TONS	Unit Size	XXX (tons)	56 to 300 (nominal size — refer to Table 1 for unit modular combinations)				FACTORY	unitsize	66
→VAR.A	Nb Fan on Varifan Cir A	X	0-6			0: No low ambient temperature head pressure control 1:low ambient temperature head pressure control	FACTORY	varfan_a	
→VAR.B	Nb Fan on Varifan Cir B	X	0-6			0: No low ambient temperature head pressure control 1: low ambient temperature head pressure control	FACTORY	varfan_b	
→VAR.C	Nb Fan on Varifan Cir C	X	0-6			0: No low ambient temperature head pressure control 1: low ambient temperature head pressure control	FACTORY	varfan_c	
→HGBP	Hot Gas Bypass Control		0=Unused 1=Startup Only 2=Close Ctrl 3=High Ambient	1 is default for med. temp. brine units (***FLUD***=2)		0	FACTORY	hgbp_sel	17, 20-23
→60HZ	60 Hz Frequency		NO/YES			YES	FACTORY	freq_60H	
→RECL	Heat Reclaim Select		NO/YES			NO	FACTORY	recl_opt	49
→EHS	Electrical Heater Stage		0-4	Not supported		0	FACTORY	ehs_sel	
→EMM	EMM Module Installed		NO/YES			NO	FACTORY	emm_nrcp	65
→PAS.E	Password Enable Password Protection Must Be Disabled to Change Password		DSBL/ENBL			ENBL	FACTORY	pass_enb	
→PASS	Password	XXX	1 to 0150			0111	FACTORY	fac_pass	
→FREE	Free Cooling Select		NO/YES	Not supported.		NO	FACTORY	freecool	
→PD4.D	Pro_Dialog User Display		NO/YES	Must be set to NO		NO	FACTORY	pd4_disp	
→BOIL	Boiler Command Select		OFF/ON	Not supported.		OFF	FACTORY	boil_sel	
→VLT.S	VLT Fan Drive Select		NO/YES	Not supported.		NO	FACTORY	Vh_sel	
→RPM.F	VLT Fan Drive RPM	XXXX	0 to 1200	Not supported.		0	FACTORY	Vh_rpm	
→MCHX	MCHX Exchanger Select		NO/YES			NO	FACTORY	mchx_sel	
SERV	SERVICE CONFIGURATION								
→FLUD	Cooler Fluid Type		1=Water 2=Brine 3=Low Brine	Low Brine is not supported.		1	SERVICE1	flui_typ	17, 22-24 33,66, 67,69
→MOP	EXV MOP Setpoint	XX.X (deg F/deg C)	40-60 F (4.4-15.6 C)			50	SERVICE1	mop_sp	67
→HP.TH	High Pressure Threshold	XXX.X (psi/kPa)	500-640 psi (3447 to 4412 kPa)			609	SERVICE1	hp_th	23,48
→SHP.A	Cir A Superheat Setp	XX.X (ΔF/ΔC)	3-14 F (1.7-7.8 C)			9.0	SERVICE1	sh_sp_a	67,69
→SHP.B	Cir B Superheat Setp	XX.X (ΔF/ΔC)	3-14 F (1.7-7.8 C)			9.0	SERVICE1	sh_sp_b	67,69
→SHP.C	Cir C Superheat Setp	XX.X (ΔF/ΔC)	3-14 F (1.7-7.8 C)			9.0	SERVICE1	sh_sp_c	67,69
→HTR	Cooler Heater DT Setp	XX.X (ΔF/ΔC)	0.5-9 F (0.3-5.0 C)			2.0 (Number of degrees added to brine freeze set point to enable cooler heater.)	SERVICE1	heatersp	51
→EWTO	Entering Water Control		NO/YES			NO	SERVICE1	ewt_opt	33
→AU.SM	Auto Start When SM Lost		NO/YES			NO	SERVICE1	auto_sm	68
→BOTH	HSM Both Command Select		NO/YES			NO	USER	both_sel	
→LLWT	Brine Min. Fluid Temp.	XX	–20-38 F				USER	Mini_Lwt	
→LOSP	Brine Freeze Setpoint	XX.X (deg F/deg C)	–4-50 F (–20-10 C)			34.0	SERVICE1	lowestsp	23,24, 33,51, 66,69
→HD.PG	Varifan Proportion Gain	XX.X	–10-10			2.0	SERVICE1	hd_pg	
→HD.DG	Varifan Derivative Gain	XX.X	–10-10			0.4	SERVICE1	hd_dg	
→HD.IG	Varifan Integral Gain	XX.X	–10-10			0.2	SERVICE1	hd_ig	
→HR.MI	Reclaim Water Valve Min	XXX.X (%)				20	SERVICE1	min_3w	
→HR.MA	Reclaim Water Valve Max	XXX.X (%)				100	SERVICE1	max_3w	
→AVFA	Attach Drive to Fan A		NO/YES	Not supported.		NO	SERVICE3	set_drva	
→AVFB	Attach Drive to Fan B		NO/YES	Not supported.		NO	SERVICE3	set_drvb	
→AVFC	Attach Drive to Fan C		NO/YES	Not supported.		NO	SERVICE3	set_drvc	

MODE — CONFIGURATION (cont)

ITEM	EXPANSION	UNITS	RANGE	COMMENT	DEFAULT	CCN TABLE	CCN POINT	PAGE NO.
OPTN	UNIT OPTIONS 2 CONTROLS							
→CCNA	CCN Address	XXX	1-239		1	N/A	CCNA	46
→CCNB	CCN Bus Number	XXX	0-239		0	N/A	CCNB	46
→BAUD	CCN Baud Rate		1=2400 2=4800 3=9600 4=19200 5=38400		3	N/A	BAUD	
→LOAD	Loading Sequence Select		0=Equal 1=Staged		0	USER	lead_cir	20
→LLCS	Lead/Lag Circuit Select		0=Automatic 1=Cir A Leads 2=Cir B Leads 3=Cir C Leads		0	USER	seq_typ	20,21
→RL.S	Ramp Load Select		ENBL/DSBL		DSBL	USER	ramp_sel	17,23,
→DELY	Minutes Off Time	XX (Minutes)	1 to 15		1	USER	off_on_d	17,31, 68
→ICE.M	Ice Mode Enable		ENBL/DSBL		DSBL	USER	ice_cnfg	32,33
→PUMP	Cooler Pumps Sequence		0=No Pump 1=1 Pump Only 2=2 Pumps Auto 3=PMP 1 Manual 4=PMP 2 Manual		0	USER	pump_seq	31,44
→ROT.P	Pump Rotation Delay	XXXX (hours)	24 to 3000		48	USER	pump_del	47
→PM.PS	Periodic Pump Start		NO-YES		NO	USER	pump_per	32
→P.SBY	Stop Pump In Standby		NO-YES		NO	USER	pump_sby	
→P.LOC	Flow Checked if Pmp Off		NO-YES		YES	USER	pump_loc	32
→LS.ST	Night Low Noise Start	XX.XX	00.00-23.59		00.00	USER	nh_start	
→LS.ND	Night Low Noise End	XX.XX	00-00-23.59		00.00	USER	nh_end	
→LS.LT	Low Noise Capacity Lim	XXX (%)	0-100		100	USER	nh_limit	
→OA.TH	Heat Mode OAT Threshold	XX.X (deg F/deg C)		Not supported.	5 F	USER	heat_th	
→FREE	Free Cooling OAT Limit	XX.X (deg F/deg C)		Not supported.	32.0	USER	free_oat	
→BO.TH	Boiler OAT Threshold	XX.X (deg F/deg C)	5-32 F (–15-0 C)	Not supported.	14	USER	boil_th	
→EHST	Elec Stag OAT Threshold	XX.XX (deg F/deg C)	23 -70 F (–5-21 C)	Not supported.	41	USER	ehs_th	
→EHSB	Last Heat Elec Backup		NO-YES	Not supported.	NO	USER	ehs_back	
→E.DEF	Quick EHS in Defrost		NO-YES	Not supported.	NO	USER	ehs_defr	
→EHSP	Elec Heating Pulldown	XX (min)		Not supported.	0	USER	ehs_pull	
→AUTO	Auto Changeover Select		NO-YES	Not supported.	NO	USER	auto_sel	
RSET	RESET, COOL AND HEAT TEMP							
→CRST	Cooling Reset Type		0=No Reset 1=Out Air Temp 2=Delta T Temp 3=4-20 mA Input 4=Space Temp		0	USER	cr_sel	33,34, 38,46
→HRST	Heating Reset Type		0=No Reset 1=Out Air Temp 2=Delta T Temp 3=4-20 mA Input	Not supported.	0	USER	hr_sel	
→DMDC	Demand Limit Select		0=None 1=Switch 2=4-20 mA Input		0	USER	lim_sel	41
→DMMX	mA for 100% Demand Lim	XX.X (mA)			0.0	USER	lim_mx	41
→DMZE	mA for 0% Demand Limit	XX.X (mA)			0.0	USER	lim_ze	41
→MSSL	Master/Slave Select		0=Disable 1=Master 2=Slave		0	MST_SLV	ms_sel	46,66, 68
→SLVA	Slave Address	XXX	1-236		2	MST_SLV	slv_addr	
→LLBL	Lead/Lag Balance Select		ENBL/DSBL		DSBL	MST_SLV	ll_bal	17,45, 46
→LLBD	Lead/Lag Balance Delta	XXX (hours)	40-400		168	MST_SLV	ll_bal_d	17,45, 46
→LLDY	Lag Start Delay	XX (minutes)	2-30		10	MST_SLV	lsrt_tim	17,45
→LAGP	Lag Unit Pump Select		0=Off if Unit stopped 1=On if Unit stopped		0	MST_SLV	lag_pump	17,20, 45
→LPUL	Lead Pulldown Time	XX (minutes)	0-60		0	MST_SLV	lead_pul	17,45

MODE — TIMECLOCK

ITEM	EXPANSION	UNITS	RANGE	COMMENT	WRITE STATUS	CCN TABLE	CCN POINT	PAGE NO.
TIME	TIME OF DAY							
→HH.MM	Hour and Minute	XX.XX	00.00-23.59		forcible*	N/A	HH.MM	
DATE	MONTH DATE DAY AND YEAR							
→MNTH	Month of Year		1=January 2=February 3=March 4=April 5=May 6=June 7=July 8=August 9=September 10=October 11=November 12=December		forcible*	N/A	MNTH	
→DOM	Day of Month	XX	1-31		forcible*	N/A	DOM	
→DAY	Day of Week		1=Monday 2=Tuesday 3=Wednesday 4=Thursday 5=Friday 6=Saturday 7=Sunday		forcible*	N/A	DAY	
→YEAR	Year of Century	XX	00-99		forcible*	N/A	YEAR	
SCH1	TIME SCHEDULE 1							32,33
→PER.1	Period 1 Occ/Unocc Sel							
→PER.1→OCC.1	Occupied Time	XX.XX	00.00-23.59		forcible	OCC1P01S	OCCTOD1	
→PER.1→UNO.1	Unoccupied Time	XX.XX	00.00-23.59		forcible	OCC1P01S	UNOCTOD1	
→PER.1→MON.1	Monday Select		NO/YES		forcible	OCC1P01S	DOW1	
→PER.1→TUE.1	Tuesday Select		NO/YES		forcible	OCC1P01S	DOW1	
→PER.1→WED.1	Wednesday Select		NO/YES		forcible	OCC1P01S	DOW1	
→PER.1→THU.1	Thursday Select		NO/YES		forcible	OCC1P01S	DOW1	
→PER.1→FRI.1	Friday Select		NO/YES		forcible	OCC1P01S	DOW1	
→PER.1→SAT.1	Saturday Select		NO/YES		forcible	OCC1P01S	DOW1	
→PER.1→SUN.1	Sunday Select		NO/YES		forcible	OCC1P01S	DOW1	
→PER.1→HOL.1	Holiday Select		NO/YES		forcible	OCC1P01S	DOW1	
→PER.2	Period 2 Occ/Unocc Sel					OCC1P01S		
→PER.2→OCC.2	Occupied Time	XX.XX	00.00-23.59		forcible	OCC1P01S	OCCTOD2	
→PER.2→UNO.2	Unoccupied Time	XX.XX	00.00-23.59		forcible	OCC1P01S	UNOCTOD2	
→PER.2→MON.2	Monday Select		NO/YES		forcible	OCC1P01S	DOW2	
→PER.2→TUE.2	Tuesday Select		NO/YES		forcible	OCC1P01S	DOW2	
→PER.2→WED.2	Wednesday Select		NO/YES		forcible	OCC1P01S	DOW2	
→PER.2→THU.2	Thursday Select		NO/YES		forcible	OCC1P01S	DOW2	
→PER.2→FRI.2	Friday Select		NO/YES		forcible	OCC1P01S	DOW2	
→PER.2→SAT.2	Saturday Select		NO/YES		forcible	OCC1P01S	DOW2	
→PER.2→SUN.2	Sunday Select		NO/YES		forcible	OCC1P01S	DOW2	
→PER.2→HOL.2	Holiday Select		NO/YES		forcible	OCC1P01S	DOW2	
→PER.3	Period 3 Occ/Unocc Sel					OCC1P01S		
→PER.3→OCC.3	Occupied Time	XX.XX	00.00-23.59		forcible	OCC1P01S	OCCTOD3	
→PER.3→UNO.3	Unoccupied Time	XX.XX	00.00-23.59		forcible	OCC1P01S	UNOCTOD3	
→PER.3→MON.3	Monday Select		NO/YES		forcible	OCC1P01S	DOW3	
→PER.3→TUE.3	Tuesday Select		NO/YES		forcible	OCC1P01S	DOW3	
→PER.3→WED.3	Wednesday Select		NO/YES		forcible	OCC1P01S	DOW3	
→PER.3→THU.3	Thursday Select		NO/YES		forcible	OCC1P01S	DOW3	
→PER.3→FRI.3	Friday Select		NO/YES		forcible	OCC1P01S	DOW3	
→PER.3→SAT.3	Saturday Select		NO/YES		forcible	OCC1P01S	DOW3	
→PER.3→SUN.3	Sunday Select		NO/YES		forcible	OCC1P01S	DOW3	
→PER.3→HOL.3	Holiday Select		NO/YES		forcible	OCC1P01S	DOW3	
→PER.4	Period 4 Occ/Unocc Sel							
→PER.4→OCC.4	Occupied Time	XX.XX	00.00-23.59		forcible	OCC1P01S	OCCTOD4	
→PER.4→UNO.4	Unoccupied Time	XX.XX	00.00-23.59		forcible	OCC1P01S	UNOCTOD4	
→PER.4→MON.4	Monday Select		NO/YES		forcible	OCC1P01S	DOW4	
→PER.4→TUE.4	Tuesday Select		NO/YES		forcible	OCC1P01S	DOW4	
→PER.4→WED.4	Wednesday Select		NO/YES		forcible	OCC1P01S	DOW4	
→PER.4→THU.4	Thursday Select		NO/YES		forcible	OCC1P01S	DOW4	
→PER.4→FRI.4	Friday Select		NO/YES		forcible	OCC1P01S	DOW4	
→PER.4→SAT.4	Saturday Select		NO/YES		forcible	OCC1P01S	DOW4	
→PER.4→SUN.4	Sunday Select		NO/YES		forcible	OCC1P01S	DOW4	
→PER.4→HOL.4	Holiday Select		NO/YES		forcible	OCC1P01S	DOW4	
→PER.5	Period 5 Occ/Unocc Sel							
→PER.5→OCC.5	Occupied Time	XX.XX	00.00-23.59		forcible	OCC1P01S	OCCTOD5	
→PER.5→UNO.5	Unoccupied Time	XX.XX	00.00-23.59		forcible	OCC1P01S	UNOCTOD5	
→PER.5→MON.5	Monday Select		NO/YES		forcible	OCC1P01S	DOW5	
→PER.5→TUE.5	Tuesday Select		NO/YES		forcible	OCC1P01S	DOW5	
→PER.5→WED.5	Wednesday Select		NO/YES		forcible	OCC1P01S	DOW5	
→PER.5→THU.5	Thursday Select		NO/YES		forcible	OCC1P01S	DOW5	
→PER.5→FRI.5	Friday Select		NO/YES		forcible	OCC1P01S	DOW5	
→PER.5→SAT.5	Saturday Select		NO/YES		forcible	OCC1P01S	DOW5	
→PER.5→SUN.5	Sunday Select		NO/YES		forcible	OCC1P01S	DOW5	
→PER.5→HOL.5	Holiday Select		NO/YES		forcible	OCC1P01S	DOW5	
→PER.6	Period 6 Occ/Unocc Sel							
→PER.6→OCC.6	Occupied Time	XX.XX	00.00-23.59		forcible	OCC1P01S	OCCTOD6	
→PER.6→UNO.6	Unoccupied Time	XX.XX	00.00-23.59		forcible	OCC1P01S	UNOCTOD6	
→PER.6→MON.6	Monday Select		NO/YES		forcible	OCC1P01S	DOW6	
→PER.6→TUE.6	Tuesday Select		NO/YES		forcible	OCC1P01S	DOW6	
→PER.6→WED.6	Wednesday Select		NO/YES		forcible	OCC1P01S	DOW6	
→PER.6→THU.6	Thursday Select		NO/YES		forcible	OCC1P01S	DOW6	
→PER.6→FRI.6	Friday Select		NO/YES		forcible	OCC1P01S	DOW6	
→PER.6→SAT.6	Saturday Select		NO/YES		forcible	OCC1P01S	DOW6	
→PER.6→SUN.6	Sunday Select		NO/YES		forcible	OCC1P01S	DOW6	
→PER.6→HOL.6	Holiday Select		NO/YES		forcible	OCC1P01S	DOW6	

*Password protected.

MODE — TIMECLOCK (cont)

ITEM	EXPANSION	UNITS	RANGE	COMMENT	WRITE STATUS	CCN TABLE	CCN POINT	PAGE NO.
SCH1	TIME SCHEDULE 1							
→PER.7	Period 7 Occ/Unocc Sel							
→PER.7→OCC.7	Occupied Time	XX.XX	00.00-23.59		forcible	OCCP01S	OCCTOD7	
→PER.7→UNO.7	Unoccupied Time	XX.XX	00.00-23.59		forcible	OCCP01S	UNOCTOD7	
→PER.7→MON.7	Monday Select		NO/YES		forcible	OCCP01S	DOW7	
→PER.7→TUE.7	Tuesday Select		NO/YES		forcible	OCCP01S	DOW7	
→PER.7→WED.7	Wednesday Select		NO/YES		forcible	OCCP01S	DOW7	
→PER.7→THU.7	Thursday Select		NO/YES		forcible	OCCP01S	DOW7	
→PER.7→FRI.7	Friday Select		NO/YES		forcible	OCCP01S	DOW7	
→PER.7→SAT.7	Saturday Select		NO/YES		forcible	OCCP01S	DOW7	
→PER.7→SUN.7	Sunday Select		NO/YES		forcible	OCCP01S	DOW7	
→PER.7→HOL.7	Holiday Select		NO/YES		forcible	OCCP01S	DOW7	
→PER.8	Period 8 Occ/Unocc Sel					OCCP01S		
→PER.8→OCC.8	Occupied Time	XX.XX	00.00-23.59		forcible	OCCP01S	OCCTOD8	
→PER.8→UNO.8	Unoccupied Time	XX.XX	00.00-23.59		forcible	OCCP01S	UNOCTOD8	
→PER.8→MON.8	Monday Select		NO/YES		forcible	OCCP01S	DOW8	
→PER.8→TUE.8	Tuesday Select		NO/YES		forcible	OCCP01S	DOW8	
→PER.8→WED.8	Wednesday Select		NO/YES		forcible	OCCP01S	DOW8	
→PER.8→THU.8	Thursday Select		NO/YES		forcible	OCCP01S	DOW8	
→PER.8→FRI.8	Friday Select		NO/YES		forcible	OCCP01S	DOW8	
→PER.8→SAT.8	Saturday Select		NO/YES		forcible	OCCP01S	DOW8	
→PER.8→SUN.8	Sunday Select		NO/YES		forcible	OCCP01S	DOW8	
→PER.8→HOL.8	Holiday Select		NO/YES		forcible	OCCP01S	DOW8	
SCH2	TIME SCHEDULE 2							32,33
→PER.1	Period 1 Occ/Unocc Sel							
→PER.1→OCC.1	Occupied Time	XX.XX	00.00-23.59		forcible	OCC2P02S	OCCTOD1	
→PER.1→UNO.1	Unoccupied Time	XX.XX	00.00-23.59		forcible	OCC2P02S	UNOCTOD1	
→PER.1→MON.1	Monday Select		NO/YES		forcible	OCC2P02S	DOW1	
→PER.1→TUE.1	Tuesday Select		NO/YES		forcible	OCC2P02S	DOW1	
→PER.1→WED.1	Wednesday Select		NO/YES		forcible	OCC2P02S	DOW1	
→PER.1→THU.1	Thursday Select		NO/YES		forcible	OCC2P02S	DOW1	
→PER.1→FRI.1	Friday Select		NO/YES		forcible	OCC2P02S	DOW1	
→PER.1→SAT.1	Saturday Select		NO/YES		forcible	OCC2P02S	DOW1	
→PER.1→SUN.1	Sunday Select		NO/YES		forcible	OCC2P02S	DOW1	
→PER.1→HOL.1	Holiday Select		NO/YES		forcible	OCC2P02S	DOW1	
→PER.2	Period 2 Occ/Unocc Sel							
→PER.2→OCC.2	Occupied Time	XX.XX	00.00-23.59		forcible	OCC2P02S	OCCTOD	
→PER.2→UNO.2	Unoccupied Time	XX.XX	00.00-23.59		forcible	OCC2P02S	UNOCTOD2	
→PER.2→MON.2	Monday Select		NO/YES		forcible	OCC2P02S	DOW2	
→PER.2→TUE.2	Tuesday Select		NO/YES		forcible	OCC2P02S	DOW2	
→PER.2→WED.2	Wednesday Select		NO/YES		forcible	OCC2P02S	DOW2	
→PER.2→THU.2	Thursday Select		NO/YES		forcible	OCC2P02S	DOW2	
→PER.2→FRI.2	Friday Select		NO/YES		forcible	OCC2P02S	DOW2	
→PER.2→SAT.2	Saturday Select		NO/YES		forcible	OCC2P02S	DOW2	
→PER.2→SUN.2	Sunday Select		NO/YES		forcible	OCC2P02S	DOW2	
→PER.2→HOL.2	Holiday Select		NO/YES		forcible	OCC2P02S	DOW2	
→PER.3	Period 3 Occ/Unocc Sel							
→PER.3→OCC.3	Occupied Time	XX.XX	00.00-23.59		forcible	OCC2P02S	OCCTOD	
→PER.3→UNO.3	Unoccupied Time	XX.XX	00.00-23.59		forcible	OCC2P02S	UNOCTOD3	
→PER.3→MON.3	Monday Select		NO/YES		forcible	OCC2P02S	DOW3	
→PER.3→TUE.3	Tuesday Select		NO/YES		forcible	OCC2P02S	DOW3	
→PER.3→WED.3	Wednesday Select		NO/YES		forcible	OCC2P02S	DOW3	
→PER.3→THU.3	Thursday Select		NO/YES		forcible	OCC2P02S	DOW3	
→PER.3→FRI.3	Friday Select		NO/YES		forcible	OCC2P02S	DOW3	
→PER.3→SAT.3	Saturday Select		NO/YES		forcible	OCC2P02S	DOW3	
→PER.3→SUN.3	Sunday Select		NO/YES		forcible	OCC2P02S	DOW3	
→PER.3→HOL.3	Holiday Select		NO/YES		forcible	OCC2P02S	DOW3	
→PER.4	Period 4 Occ/Unocc Sel							
→PER.4→OCC.4	Occupied Time	XX.XX	00.00-23.59		forcible	OCC2P02S	OCCTOD4	
→PER.4→UNO.4	Unoccupied Time	XX.XX	00.00-23.59		forcible	OCC2P02S	UNOCTOD4	
→PER.4→MON.4	Monday Select		NO/YES		forcible	OCC2P02S	DOW4	
→PER.4→TUE.4	Tuesday Select		NO/YES		forcible	OCC2P02S	DOW4	
→PER.4→WED.4	Wednesday Select		NO/YES		forcible	OCC2P02S	DOW4	
→PER.4→THU.4	Thursday Select		NO/YES		forcible	OCC2P02S	DOW4	
→PER.4→FRI.4	Friday Select		NO/YES		forcible	OCC2P02S	DOW4	
→PER.4→SAT.4	Saturday Select		NO/YES		forcible	OCC2P02S	DOW4	
→PER.4→SUN.4	Sunday Select		NO/YES		forcible	OCC2P02S	DOW4	
→PER.4→HOL.4	Holiday Select		NO/YES		forcible	OCC2P02S	DOW4	
→PER.5	Period 5 Occ/Unocc Sel							
→PER.5→OCC.5	Occupied Time	XX.XX	00.00-23.59		forcible	OCC2P02S	OCCTOD5	
→PER.5→UNO.5	Unoccupied Time	XX.XX	00.00-23.59		forcible	OCC2P02S	UNOCTOD5	
→PER.5→MON.5	Monday Select		NO/YES		forcible	OCC2P02S	DOW5	
→PER.5→TUE.5	Tuesday Select		NO/YES		forcible	OCC2P02S	DOW5	
→PER.5→WED.5	Wednesday Select		NO/YES		forcible	OCC2P02S	DOW5	
→PER.5→THU.5	Thursday Select		NO/YES		forcible	OCC2P02S	DOW5	
→PER.5→FRI.5	Friday Select		NO/YES		forcible	OCC2P02S	DOW5	
→PER.5→SAT.5	Saturday Select		NO/YES		forcible	OCC2P02S	DOW5	
→PER.5→SUN.5	Sunday Select		NO/YES		forcible	OCC2P02S	DOW5	
→PER.5→HOL.5	Holiday Select		NO/YES		forcible	OCC2P02S	DOW5	
→PER.6	Period 6 Occ/Unocc Sel							
→PER.6→OCC.6	Occupied Time	XX.XX	00.00-23.59		forcible	OCC2P02S	OCCTOD6	
→PER.6→UNO.6	Unoccupied Time	XX.XX	00.00-23.59		forcible	OCC2P02S	UNOCTOD6	
→PER.6→MON.6	Monday Select		NO/YES		forcible	OCC2P02S	DOW6	
→PER.6→TUE.6	Tuesday Select		NO/YES		forcible	OCC2P02S	DOW6	
→PER.6→WED.6	Wednesday Select		NO/YES		forcible	OCC2P02S	DOW6	
→PER.6→THU.6	Thursday Select		NO/YES		forcible	OCC2P02S	DOW6	
→PER.6→FRI.6	Friday Select		NO/YES		forcible	OCC2P02S	DOW6	
→PER.6→SAT.6	Saturday Select		NO/YES		forcible	OCC2P02S	DOW6	
→PER.6→SUN.6	Sunday Select		NO/YES		forcible	OCC2P02S	DOW6	
→PER.6→HOL.6	Holiday Select		NO/YES		forcible	OCC2P02S	DOW6	

MODE — TIMECLOCK (cont)

ITEM	EXPANSION	UNITS	RANGE	COMMENT	WRITE STATUS	CCN TABLE	CCN POINT	PAGE NO.
→***PER.7***	Period 7 Occ/Unocc Sel							
→***PER.7→OCC.7***	Occupied Time	XX.XX	00.00-23.59		forcible	OCC2P02S	OCCTOD7	
→***PER.7→UNO.7***	Unoccupied Time	XX.XX	00.00-23.59		forcible		UNOCTOD7	
→***PER.7→MON.7***	Monday Select		NO/YES		forcible		DOW7	
→***PER.7→TUE.7***	Tuesday Select		NO/YES		forcible		DOW7	
→***PER.7→WED.7***	Wednesday Select		NO/YES		forcible		DOW7	
→***PER.7→THU.7***	Thursday Select		NO/YES		forcible		DOW7	
→***PER.7→FRI.7***	Friday Select		NO/YES		forcible		DOW7	
→***PER.7→SAT.7***	Saturday Select		NO/YES		forcible		DOW7	
→***PER.7→SUN.7***	Sunday Select		NO/YES		forcible		DOW7	
→***PER.7→HOL.7***	Holiday Select		NO/YES		forcible		DOW7	
→***PER.8***	Period 8 Occ/Unocc Sel							
→***PER.8→OCC.8***	Occupied Time	XX.XX	00.00-23.59		forcible		OCCTOD8	
→***PER.8→UNO.8***	Unoccupied Time	XX.XX	00.00-23.59		forcible		UNOCTOD8	
→***PER.8→MON.8***	Monday Select		NO/YES		forcible		DOW8	
→***PER.8→TUE.8***	Tuesday Select		NO/YES		forcible		DOW8	
→***PER.8→WED.8***	Wednesday Select		NO/YES		forcible		DOW8	
→***PER.8→THU.8***	Thursday Select		NO/YES		forcible		DOW8	
→***PER.8→FRI.8***	Friday Select		NO/YES		forcible		DOW8	
→***PER.8→SAT.8***	Saturday Select		NO/YES		forcible		DOW8	
→***PER.8→SUN.8***	Sunday Select		NO/YES		forcible		DOW8	
→***PER.8→HOL.8***	Holiday Select		NO/YES		forcible		DOW8	
HOLI	HOLIDAYS CONFIGURATION							
→***HOL.1***	Holidays Config 1							
→***HOL.1→MON.1***	Holiday Start Month		1=January 2=February 3=March 4=April 5=May 6=June 7=July 8=August 9=September 10=October 11=November 12=December		forcible	HOLDY_01	HOL_MON	
→***HOL.1→DAY.1***	Holiday Start Day	XX	1 to 31		forcible	HOLDY_01	HOL_DAY	
→***HOL.1→DUR.1***	Holiday Duration in Day	XX	1 to 99		forcible	HOLDY_01	HOL_LEN	
→***HOL.1→HOL.2***	Holidays Config 2							
→***HOL.1→MON.2***	Holiday Start Month		See HOL.1→MON.1		forcible	HOLDY_02	HOL_MON	
→***HOL.2→DAY.2***	Holiday Start Day		See HOL.1→DAY.1		forcible	HOLDY_02	HOL_DAY	
→***HOL.2→DUR.2***	Holiday Duration in Day		See HOL.1→DUR.1		forcible	HOLDY_02	HOL_LEN	
→***HOL.9***	Holidays Config 9							
→***HOL.9→MON.9***	Holiday Start Month		See HOL.1→MON.1		forcible	HOLDY_09	HOL_MON	
→***HOL.9→DAY.9***	Holiday Start Day		See HOL.1→DAY.1		forcible	HOLDY_09	HOL_DAY	
→***HOL.9→DUR.9***	Holiday Duration in Days		See HOL.1→DUR.1		forcible	HOLDY_09	HOL_LEN	
→***HOL.10→HO.10***	Holidays Config 10							
→***HOL.10→MO.10***	Holiday Start Month		See HOL.1→MON.1		forcible	HOLDY_09		
→***HOL.10→DA.10***	Holiday Start Day		See HOL.1→DAY.1		forcible	HOLDY_09		
→***HOL.10→DU.10***	Holiday Duration in Days		See HOL.1→DUR.1		forcible	HOLDY_09		
→***HOL.16→HO.16***	Holidays Config 16							
→***HOL.16→MO.16***	Holiday Start Month		See HOL.1→MON.1		forcible	HOLDY_16		
→***HOL.16→DA.16***	Holiday Start Day		See HOL.1→DAY.1		forcible			
→***HOL.16→DU.16***	Holiday Duration in Days		See HOL.1→DUR.1		forcible			
MCFG	SERVICE MAINTENANCE CONFIG							70
→***AL.SV***	Service Warning Select		NO/YES		forcible*	MAINTCFG	s_alert	
→***CHRG***	Refrigerant Charge		NO/YES		forcible*	MAINTCFG	charge_a	
→***WATE***	Water Loop Size		NO/YES		forcible*	MAINTCFG	wloop_c	
→***PMP.1***	Pump 1 (days)	XXXX (days)	0-65,500		forcible†	MAINTCFG	pump1_c	
→***PMP.2***	Pump 2 (days)	XXXX (days)	0-65,500		forcible†	MAINTCFG	pump2_c	
→***PMP.C***	Cond Pump (days)	XXXX (days)	0-65,500		forcible†	MAINTCFG	hpump_c	
→***W.FIL***	Water Filter (days)	XXXX (days)			forcible†	MAINTCFG	wfilte_c	43
→***RS.SV***	Servicing Alert Reset		0=Default 1=Refrigerant Charge 2=Water loop size 3=Not used 4=Pump 1 5=Pump 2 6=Reclaim Pump (not used) 7=Water filter 8=Reset all		forcible†	SERMAINT	s_reset	70

*Default=NO.
†Default=0.

MODE — OPERATING MODES

ITEM	EXPANSION	UNITS	RANGE	COMMENT	WRITE STATUS	CCN TABLE	CCN POINT	PAGE NO.
SLCT	OPERATING TYPE CONTROL							
→OPER	Operating Control Type		0=Switch Ctrl 1=Time Sched 2=CCN Control	Default = 0	forcible	N/A	N/A	32,46
→SP.SE	Setpoint Select		0=Setpoint Occ 1=Setpoint1 2=Setpoint2 3=4-20mA Setp 4=Dual Setp Sw	Default = 0	forcible	N/A	N/A	32,33, 41
→HC.SE	Heat Cool Select		0=Cooling 1=Heating 2=Auto Chgover 3=Heat Cool Sw	Default = 0 1-3 not supported.	forcible	GENUNIT	HC_SEL	32,33
→RL.SE	Reclaim Select		0=No 1=Yes 2=Switch Ctrl	Default = 0 1 = CCN control	forcible	GENUNIT	RECL_SET	49
MODE	MODES CONTROLLING UNIT							
→MD01	Startup Delay in Effect		OFF/ON			MODES	MODE_01	46
→MD02	Second Setpoint in Use		OFF/ON			MODES	MODE_02	46
→MD03	Reset in Effect		OFF/ON			MODES	MODE_03	46
→MD04	Demand Limit Active		OFF/ON			MODES	MODE_04	46
→MD05	Ramp Loading Active		OFF/ON			MODES	MODE_05	46
→MD06	Cooler Heater Active		OFF/ON			MODES	MODE_06	46
→MD07	Water Pumps Rotation		OFF/ON			MODES	MODE_07	47
→MD08	Pump Periodic Start		OFF/ON			MODES	MODE_08	47
→MD09	Night Low Noise Active		OFF/ON			MODES	MODE_09	47
→MD10	System Manager Active		OFF/ON			MODES	MODE_10	47
→MD11	Mast Slave Ctrl Active		OFF/ON			MODES	MODE_11	47
→MD12	Auto Changeover Active		OFF/ON	Not supported.		MODES	MODE_12	47
→MD13	Free Cooling Active		OFF/ON	Not supported.		MODES	MODE_13	47
→MD14	Reclaim Active		OFF/ON			MODES	MODE_14	47
→MD15	Electric Heat Active		OFF/ON	Not supported.		MODES	MODE_15	47
→MD16	Heating Low EWT Lockout		OFF/ON	Not supported.		MODES	MODE_16	47
→MD17	Boiler Active		OFF/ON	Not supported.		MODES	MODE_17	47
→MD18	Ice Mode in Effect		OFF/ON			MODES	MODE_18	47
→MD19	Defrost Active on Cir A		OFF/ON	Not supported.		MODES	MODE_19	48
→MD20	Defrost Active on Cir B		OFF/ON	Not supported.		MODES	MODE_20	48
→MD21	Low Suction Circuit A		OFF/ON			MODES	MODE_21	48
→MD22	Low Suction Circuit B		OFF/ON			MODES	MODE_22	48
→MD23	Low Suction Circuit C		OFF/ON			MODES	MODE_23	48
→MD24	High DGT Circuit A		OFF/ON			MODES	MODE_24	48
→MD25	High DGT Circuit B		OFF/ON			MODES	MODE_25	48
→MD26	High DGT Circuit C		OFF/ON			MODES	MODE_26	48
→MD27	High Pres Override Cir A		OFF/ON			MODES	MODE_27	48
→MD28	High Pres Override Cir B		OFF/ON			MODES	MODE_28	48
→MD29	High Pres OVerride Cir C		OFF/ON			MODES	MODE_29	48
→MD30	Low Superheat Circuit A		OFF/ON			MODES	MODE_30	48
→MD31	Low Superheat Circuit B		OFF/ON			MODES	MODE_31	48
→MD32	Low Superheat Circuit C		OFF/ON			MODES	MODE_32	48

NOTE: See operating modes starting on page 46.

MODE — ALARMS

ITEM	EXPANSION*	UNITS	RANGE	COMMENT	WRITE STATUS	CCN TABLE	CCN POINT	PAGE NO.
R.ALM	RESET ALL CURRENT ALRM				forcible	N/A	N/A	57
ALRM†	CURRENTLY ACTIVE ALARM							57
	Current Alarm 1					GENUNIT	alarm_1	57
	Current Alarm 2					GENUNIT	alarm_2	57
	Current Alarm 3					GENUNIT	alarm_3	57
	Current Alarm 4					GENUNIT	alarm_4	57
	Current Alarm 5					GENUNIT	alarm_5	57
H.ALM*	ALARM HISTORY							
	Alarm History #1					ALRMHIST	alm_history_01	
	Alarm History #2					ALRMHIST	alm_history_02	
						ALRMHIST		
	Alarm History #29					ALRMHIST	alm_history_29	
	Alarm History #30					ALRMHIST	alm_history_30	

*Expanded display will be actual alarm expansion.
†Up to five current alarms will be displayed.
**History of thirty past alarms will be displayed.

APPENDIX B — CCN TABLES

STATUS DISPLAY TABLES

TABLE	DISPLAY NAME	RANGE	UNITS	POINT NAME	WRITE STATUS
CIRCA_AN					
	Percent Total Capacity	0 - 100	%	CAPA_T	
	Discharge Pressure	nnn.n	PSI	DP_A	
	Suction Pressure	nnn.n	PSI	SP_A	
	Crank Heater Current Cp1	nnn.n	AMPS	cpa1_cur	
	Crank Heater Current Cp2	nnn.n	AMPS	cpa2_cur	
	Crank Heater Current Cp3	nnn.n	AMPS	cpa3_cur	
	Crank Heater Current Cp4	nnn.n	AMPS	cpa4_cur	
	Motor Thermistor Comp 1	nnnn	OHMS	cpa1_tmp	
	Motor Thermistor Comp 2	nnnn	OHMS	cpa2_tmp	
	Motor Thermistor Comp 3	nnnn	OHMS	cpa3_tmp	
	Motor Thermistor Comp 4	nnnn	OHMS	cpa4_tmp	
	Saturated Condensing Tmp	±nnn.n	°F	SCT_A	
	Saturated Suction Temp	±nnn.n	°F	SST_A	
	Suction Gas Temperature	±nnn.n	°F	SUCT_T_A	
	Suction Superheat Temp	±nnn.n	^F	SH_A	
	EXV Position	0 - 100	%	EXV_A	
	Head Press Actuator Pos	0 - 100	%	hd_pos_a	
CIRCA_D					
	Compressor 1 Output	On/Off		CP_A1	
	Compressor 2 Output	On/Off		CP_A2	
	Compressor 3 Output	On/Off		CP_A3	
	Compressor 4 Output	On/Off		CP_A4	
	Compressor 1 Heater Out	On/Off		cp_a1_ht	
	Compressor 2 Heater Out	On/Off		cp_a2_ht	
	Compressor 3 Heater Out	On/Off		cp_a3_ht	
	Compressor 4 Heater Out	On/Off		cp_a4_ht	
	Hot Gas Bypass Output	On/Off		HGBP_V_A	
	Fan Output DO # 1	On/Off		fan_a1	
	Fan Output DO # 2	On/Off		fan_a2	
	Fan Output DO # 3	On/Off		fan_a3	
	Fan Output DO # 4	On/Off		fan_a4	
	Fan Output DO # 5	On/Off		fan_a5	
	Fan Output DO # 6	On/Off		fan_a6	
	Fan Staging Number	0-6		FAN_ST_A	
	4 Way Refrigerant Valve	On/Off		RV_A	
CIRCB_AN					
	Percent Total Capacity	0 - 100	%	CAPB_T	
	Discharge Pressure	nnn.n	PSI	DP_B	
	Suction Pressure	nnn.n	PSI	SP_B	
	Crank Heater Current Cp1	nnn.n	AMPS	cpb1_cur	
	Crank Heater Current Cp2	nnn.n	AMPS	cpb2_cur	
	Crank Heater Current Cp3	nnn.n	AMPS	cpb3_cur	
	Crank Heater Current Cp4	nnn.n	AMPS	cpb4_cur	
	Motor Thermistor Comp 1	nnnn	OHMS	cpb1_tmp	
	Motor Thermistor Comp 2	nnnn	OHMS	cpb2_tmp	
	Motor Thermistor Comp 3	nnnn	OHMS	cpb3_tmp	
	Motor Thermistor Comp 4	nnnn	OHMS	cpb4_tmp	
	Saturated Condensing Tmp	±nnn.n	°F	SCT_B	
	Saturated Suction Temp	±nnn.n	°F	SST_B	
	Suction Gas Temperature	±nnn.n	°F	SUCT_T_B	
	Suction Superheat Temp	±nnn.n	^F	SH_B	
	EXV Position	0-100	%	EXV_B	
	Head Press Actuator Pos	0-100	%	hd_pos_b	
CIRCB_D					
	Compressor 1 Output	On/Off		CP_B1	
	Compressor 2 Output	On/Off		CP_B2	
	Compressor 3 Output	On/Off		CP_B3	
	Compressor 4 Output	On/Off		CP_B4	
	Compressor 1 Heater Out	On/Off		cp_b1_ht	
	Compressor 2 Heater Out	On/Off		cp_b2_ht	
	Compressor 3 Heater Out	On/Off		cp_b3_ht	
	Compressor 4 Heater Out	On/Off		cp_b4_ht	
	Hot Gas Bypass Output	On/Off		HGBP_V_B	
	Fan Output DO # 1	On/Off		fan_b1	
	Fan Output DO # 2	On/Off		fan_b2	
	Fan Output DO # 3	On/Off		fan_b3	
	Fan Output DO # 4	On/Off		fan_b4	
	Fan Output DO # 5	On/Off		fan_b5	
	Fan Output DO # 6	On/Off		fan_b6	
	Fan Staging Number	0-6		FAN_ST_B	
	4 Way Refrigerant Valve	On/Off		RV_B	

STATUS DISPLAY TABLES (cont)

TABLE	DISPLAY NAME	RANGE	UNITS	POINT NAME	WRITE STATUS
CIRCC_AN					
	Percent Total Capacity	0-100	%	CAPC_T	
	Discharge Pressure	nnn.n	PSI	DP_C	
	Suction Pressure	nnn.n	PSI	SP_C	
	Crank Heater Current Cp1	nnn.n	AMPS	cpc1_cur	
	Crank Heater Current Cp2	nnn.n	AMPS	cpc2_cur	
	Crank Heater Current Cp3	nnn.n	AMPS	cpc3_cur	
	Crank Heater Current Cp4	nnn.n	AMPS	cpc4_cur	
	Motor Thermistor Comp 1	nnnn	OHMS	cpc1_tmp	
	Motor Thermistor Comp 2	nnnn	OHMS	cpc2_tmp	
	Motor Thermistor Comp 3	nnnn	OHMS	cpc3_tmp	
	Motor Thermistor Comp 4	nnnn	OHMS	cpc4_tmp	
	Saturated Condensing Tmp	±nnn.n	°F	SCT_C	
	Saturated Suction Temp	±nnn.n	°F	SST_C	
	Suction Gas Temperature	±nnn.n	°F	SUCT_T_C	
	Suction Superheat Temp	±nnn.n	^F	SH_C	
	EXV Position	0-100	%	EXV_C	
	Head Press Actuator Pos	0-100	%	hd_pos_c	
CIRCC_D					
	Compressor 1 Output	On/Off		CP_C1	
	Compressor 2 Output	On/Off		CP_C2	
	Compressor 3 Output	On/Off		CP_C3	
	Compressor 4 Output	On/Off		CP_C4	
	Compressor 1 Heater Out	On/Off		cp_c1_ht	
	Compressor 2 Heater Out	On/Off		cp_c2_ht	
	Compressor 3 Heater Out	On/Off		cp_c3_ht	
	Compressor 4 Heater Out	On/Off		cp_c4_ht	
	Hot Gas Bypass Output	On/Off		HGBP_V_C	
	Fan Output DO # 1	On/Off		fan_c1	
	Fan Output DO # 2	On/Off		fan_c2	
	Fan Output DO # 3	On/Off		fan_c3	
	Fan Output DO # 4	On/Off		fan_c4	
	Fan Output DO # 5	On/Off		fan_c5	
	Fan Output DO # 6	On/Off		fan_c6	
	Fan Staging Number	0-6		FAN_ST_C	
FANHOURS	FAN Operating Hours				
	Circuit A Fan #1 Hours	nnnnn	hours	hr_fana1	
	Circuit A Fan #2 Hours	nnnnn	hours	hr_fana2	
	Circuit A Fan #3 Hours	nnnnn	hours	hr_fana3	
	Circuit A Fan #4 Hours	nnnnn	hours	hr_fana4	
	Circuit A Fan #5 Hours	nnnnn	hours	hr_fana5	
	Circuit A Fan #6 Hours	nnnnn	hours	hr_fana6	
	Circuit B Fan #1 Hours	nnnnn	hours	hr_fanb1	
	Circuit B Fan #2 Hours	nnnnn	hours	hr_fanb2	
	Circuit B Fan #3 Hours	nnnnn	hours	hr_fanb3	
	Circuit B Fan #4 Hours	nnnnn	hours	hr_fanb4	
	Circuit B Fan #5 Hours	nnnnn	hours	hr_fanb5	
	Circuit B Fan #6 Hours	nnnnn	hours	hr_fanb6	
	Circuit C Fan #1 Hours	nnnnn	hours	hr_fanc1	
	Circuit C Fan #2 Hours	nnnnn	hours	hr_fanc2	
	Circuit C Fan #3 Hours	nnnnn	hours	hr_fanc3	
	Circuit C Fan #4 Hours	nnnnn	hours	hr_fanc4	
	Circuit C Fan #5 Hours	nnnnn	hours	hr_fanc5	
	Circuit C Fan #6 Hours	nnnnn	hours	hr_fanc6	
	WATER PUMPS				
	Water Pump #1 Hours	nnnnn	hours	hr_cpum1	
	Water Pump #2 Hours	nnnnn	hours	hr_cpum2	
	Heat Reclaim Pump Hours	nnnnn	hours	hr_hpump	
	FREE COOLING PUMPS				
	Circuit A Pump Hours	nnnnn	hours	hr_fcp_a	
	Circuit B Pump Hours	nnnnn	hours	hr_fcp_b	
	Circuit C Pump Hours	nnnnn	hours	hr_fcp_c	

STATUS DISPLAY TABLES (cont)

TABLE	DISPLAY NAME	RANGE	UNITS	POINT NAME	WRITE STATUS
FREECOOL	GENERAL PARAMETER				
	Free Cooling Disable?	Yes/No		FC_SW	
	LWT-OAT Delta	nnn.n	^F	fc_delta	
	Current Cooling Power	nnn	KW	cool_pwr	
	Estimated FreeCool Power	nnn	KW	fc_pwr	
	Next session allowed in	nn	min	fc_next	
	Cooling/FreeCool Timeout	nn	min	fc_tmout	
	Free Cool Conditions OK?	Yes/No		fc_ready	
	Free Cool Request ?	Yes/No		fc_reqst	
	Valve Actuator Heaters ?	On/Off		FC_HTR	
	CIRCUIT A				
	Free Cooling Active	Yes/No		fc_on_a	
	Fan Staging Number	1-6		FAN_ST_A	
	3 Way Valve Position	nnn	%	fc_vlv_a	
	3 Way Valve Status	text*		FC_VLV_A	
	Refrigerant Pump Out	On/Off		fc_pmp_a	
	Pump Inlet Pressure	nnn	PSI	fc_inp_a	
	Pump Outlet Pressure	nnn	PSI	fc_oup_a	
	Pump Differential Pressure	nnn	PSI	fc_dp_a	
	CIRCUIT B				
	Free Cooling Active	Yes/No		fc_on_b	
	Fan Staging Number	1-6		FAN_ST_B	
	3 Way Valve Position	nnn	%	fc_vlv_b	
	3 Way Valve Status	text*		FC_VLV_B	
	Refrigerant Pump Out	On/Off		fc_pmp_b	
	Pump Inlet Pressure	nnn	PSI	fc_inp_b	
	Pump Outlet Pressure	nnn	PSI	fc_oup_b	
	Pump Differential Pressure	nnn	PSI	fc_dp_b	

* Text reflects status of valve “Closed,” “Closing,” “Opened,” “Opening,” “Stopped,” or “Failed.”

TABLE	DISPLAY NAME	RANGE	UNITS	POINT NAME	WRITE STATUS
GENUNIT	GENERAL PARAMETER				
	Control Type	Local CCN Remote		ctr_type	
	Run Status	0 = Off 1 = Running 2 = Stopping 3 = Delay 4 = Tripout 5 = Ready 6 = Override 7 = Defrost 8 = Run Test 9 = Test		STATUS	
	CCN Chiller Start/Stop	Enable/Disable		CHIL_S_S	forcible
	Chiller Occupied?	Yes/No		CHIL_OCC	forcible
	Minutes Left for Start	0-15	min	min_left	
	Heat/Cool Status	0 = Cool, 1 = Heat 2 = Stand-by 3 = Both		HEATCOOL	
	Heat/Cool Select (0=Cool, 1=Heat, 2= Auto)	0 = Cool 1 = Heat 2 = Auto		HC_SEL	forcible
	Heat Reclaim Select	Yes/No		RECL_SEL	forcible
	Free Cooling Disable	Yes/No		FC_DSBLE	
	Alarm State	0 Normal 1 Partial 2 Shutdown		ALM	
	Current Alarm 1	nnnnn		alarm_1	
	Current Alarm 2	nnnnn		alarm_2	
	Current Alarm 3	nnnnn		alarm_3	
	Current Alarm 4	nnnnn		alarm_4	
	Current Alarm 5	nnnnn		alarm_5	
	Percent Total Capacity	nnn	%	CAP_T	
	Active Demand Limit Val	nnn	%	DEM_LIM	forcible
	Lag Capacity Limit Value	nnn	%	LAG_LIM	
	Current Setpoint	±nnn.n	°F	SP	
	Setpoint Occupied	Yes/No		SP_OCC	forcible
	Setpoint Control	Setpt 1 Setpt 2 Ice_sp 4-20mA Auto		sp_ctrl	
	Control Point	±nnn.n	°F	CTRL_PNT	forcible
	Controlled Water Temp	±nnn.n	°F	CTRL_WT	
	External Temperature	±nnn.n	°F	OAT	
	Emergency Stop	Enable/Disable		EMSTOP	forcible
MODES	OPERATING MODES				
	Startup Delay in Effect	Yes/No		Mode_01	
	Second Setpoint in Use	Yes/No		Mode_02	
	Reset in Effect	Yes/No		Mode_03	
	Demand Limit Active	Yes/No		Mode_04	
	Ramp Loading Active	Yes/No		Mode_05	
	Cooler Heater Active	Yes/No		Mode_06	
	Cooler Pumps Rotation	Yes/No		Mode_07	
	Pump Periodic Start	Yes/No		Mode_08	
	Night Low Noise Active	Yes/No		Mode_09	
	System Manager Active	Yes/No		Mode_10	
	Master Slave Active	Yes/No		Mode_11	
	Auto Changeover Active	Yes/No		Mode_12	
	Free Cooling Active	Yes/No		Mode_13	
	Reclaim Active	Yes/No		Mode_14	
	Electric Heat Active	Yes/No		Mode_15	
	Heating Low EWT Lockout	Yes/No		Mode_16	
	Boiler Active	Yes/No		Mode_17	
	Ice Mode in Effect	Yes/No		Mode_18	
	Defrost Active On Cir A	Yes/No		Mode_19	
	Defrost Active On Cir B	Yes/No		Mode_20	
	Low Suction Circuit A	Yes/No		Mode_21	
	Low Suction Circuit B	Yes/No		Mode_22	
	Low Suction Circuit C	Yes/No		Mode_23	
	High DGT Circuit A	Yes/No		Mode_24	
	High DGT Circuit B	Yes/No		Mode_25	
	High DGT Circuit C	Yes/No		Mode_26	
	High Pres Override Cir A	Yes/No		Mode_27	
	High Pres Override Cir B	Yes/No		Mode_28	
	High Pres Override Cir C	Yes/No		Mode_29	
	Low Superheat Circuit A	Yes/No		Mode_30	
	Low Superheat Circuit B	Yes/No		Mode_31	
	Low Superheat Circuit C	Yes/No		Mode_32	

STATUS DISPLAY TABLES (cont)

TABLE	DISPLAY NAME	RANGE	UNITS	POINT NAME	WRITE STATUS
RECLAIM	Heat Reclaim Select	Yes/no		RECL_SEL	
	Reclaim Condenser Pump	On/Off		CONDPUMP	
	Reclaim Condenser Flow	On/Off		condflow	
	Reclaim Condenser Heater	On/Off		cond_htr	
	Reclaim Entering Fluid	±nnn.n	°F	HR_EWT	
	Reclaim Leaving Fluid	±nnn.n	°F	HR_LWT	
	Reclaim Fluid Setpoint	±nnn.n	°F	RSP	forcible
	Reclaim Valve Position	±nnn.n	%	hr_v_pos	
	HEAT RECLAIM CIRCUIT A				
	Reclaim Status Circuit A	n		hrstat_a	
	Pumpdown Pressure Cir A	±nnn.n	psi	PD_P_A	
	Sub Condenser Temp Cir A	±nnn.n	°F	hr_subta	
	Pumdown Saturated Tmp A	±nnn.n	°F	hr_sat_a	
	Subcooling Temperature A	±nnn.n	^F	hr_subca	
	Air Cond Entering Valv A	On/Off		hr_ea_a	
	Water Cond Enter Valve A	On/Off		hr_ew_a	
	Air Cond Leaving Valve A	On/Off		hr_la_a	
	Water Cond Leaving Val A	On/Off		hr_lw_a	
	HEAT RECLAIM CIRCUIT B				
	Reclaim Status Circuit B	n		hrstat_b	
	Pumpdown Pressure Cir B	±nnn.n	psi	PD_P_B	
	Sub Condenser Temp Cir B	±nnn.n	°F	hr_subtb	
	Pumdown Saturated Tmp B	±nnn.n	°F	hr_sat_b	
	Subcooling Temperature B	±nnn.n	^F	hr_subcb	
	Air Cond Entering Valv B	On/Off		hr_ea_b	
	Water Cond Enter Valve B	On/Off		hr_ew_b	
	Air Cond Leaving Valve B	On/Off		hr_la_b	
	Water Cond Leaving Val B	On/Off		hr_lw_b	
STATEGEN	UNIT DISCRETE IN				
	On/Off – Remote Switch	Open/Close		ONOFF_SW	
	Remote Heat/Cool Switch	Open/Close		HC_SW	
	Current Control	Off, On Cool, On Heat, On Auto		on_ctrl	
	Remote Reclaim Switch	Open/Close		RECL_SW	
	Free Cooling Disable Sw.	Open/close		FC_SW	
	Remote Setpoint Switch	Open/Close		SETP_SW	
	Limit Switch 1 Status	Open/Close		LIM_SW1	
	Limit Switch 2 Status	Open/Close		LIM_SW2	
	Occupied Override Switch	Open/Close		OCC_OVSW	
	Ice Done Storage Switch	Open/Close		ICE_SW	
	Interlock Status	Open/Close		LOCK_1	
	Pump Run Status	Open/Close		PUMP_DEF	
	Remote Interlock Status	Open/Close		REM_ LOCK	
	Electrical Box Safety	Open/Close		ELEC_BOX	
	UNIT DISCRETE OUT				
	Electrical Heat Stage	0-4/Off		EHS_STEP	
	Boiler Command	On/Off		BOILER	
	Water Pump #1 Command	On/Off		CPUMP_1	forcible
	Water Pump #2 Command	On/Off		CPUMP_2	forcible
	Rotate Pumps Now	Yes/No		ROT_PUMP	forcible
	Reclaim Condenser Pump	On/Off		COND_PMP	forcible
	Cooler Heater Command	On/Off		COOLHEAT	
	Shutdown Indicator State	On/Off		SHUTDOWN	
	Alarm Relay Status	On/Off		ALARMOUT	
	Alert Relay Status	On/Off		ALERT	
	Ready or Running Status	On/Off		READY	
	Running Status	On/Off		RUNNING	
	Critical Alarm Status	On/Off		CRITICAL	
	UNIT ANALOG				
	Water Exchanger Entering	±nnn.n	°F	EWT	
	Water Exchanger Leaving	±nnn.n	°F	LWT	
	Optional Space Temp	±nnn.n	°F	SPACETMP	
	CHWS Temperature	±nnn.n	°F	CHWSTEMP	
	Reset /Setpoint 4-20mA In	±nn.n	ma	SP_RESET	
	Limit 4-20mA Signal	±nn.n	ma	LIM_ANAL	
	Chiller Capacity Signal	±nn.n	volts	CAPT_010	

STATUS DISPLAY TABLES (cont)

TABLE	DISPLAY NAME	RANGE	UNITS	POINT NAME	WRITE STATUS
STRTHOUR	Machine Operating Hours	nnnnn	hours	HR_MACH	
	Machine Starts Number	nnnnn		st_mach	
	Compressor A1 Hours	nnnnn	hours	HR_CP_A1	
	Compressor A2 Hours	nnnnn	hours	HR_CP_A2	
	Compressor A3 Hours	nnnnn	hours	HR_CP_A3	
	Compressor A4 Hours	nnnnn	hours	HR_CP_A4	
	Compressor A1 Starts	nnnnn		st_cp_a1	
	Compressor A2 Starts	nnnnn		st_cp_a2	
	Compressor A3 Starts	nnnnn		st_cp_a3	
	Compressor A4 Starts	nnnnn		st_cp_a4	
	Compressor B1 Hours	nnnnn	hours	HR_CP_B1	
	Compressor B2 Hours	nnnnn	hours	HR_CP_B2	
	Compressor B3 Hours	nnnnn	hours	HR_CP_B3	
	Compressor B4 Hours	nnnnn	hours	HR_CP_B4	
	Compressor B1 Starts	nnnnn		st_cp_b1	
	Compressor B2 Starts	nnnnn		st_cp_b2	
	Compressor B3 Starts	nnnnn		st_cp_b3	
	Compressor B4 Starts	nnnnn		st_cp_b4	
	Compressor C1 Hours	nnnnn	hours	HR_CP_C1	
	Compressor C2 Hours	nnnnn	hours	HR_CP_C2	
	Compressor C3 Hours	nnnnn	hours	HR_CP_C3	
	Compressor C4 Hours	nnnnn	hours	HR_CP_C4	
	Compressor C1 Starts	nnnnn		st_cp_c1	
	Compressor C2 Starts	nnnnn		st_cp_c2	
	Compressor C4 Starts	nnnnn		st_cp_c3	
	Compressor C4 Starts	nnnnn		st_cp_c4	
	CYCLES				
	Starts Max During 1 Hour	nn		st_cp_mx	
	Starts/hr From Last 24 h	nn		st_cp_av	
	Circuit A Defrost Number	nnnnn		nb_def_a	
	Circuit B Defrost Number	nnnnn		nb_def_b	

CONFIGURATION DISPLAY TABLES

TABLE	DISPLAY NAME	RANGE	DEFAULT	UNITS	POINT NAME
ALARMDEF/ ALARMS01	Alarm Routing Control	0 or 1 for each position	00000000		ALRM_CNT
	Alarm Equipment Priority	0-7	4		EQP_TYP
	Comm Failure Retry Time	1-240	10	min	RETRY_TM
	Realarm Time	1-255	30	min	RE_ALARM
	Alarm System Name	8 chars	PRO_RBRQ		ALRM_NAM
BRODEFS/ BRODCASTS	Activate	0=Unused 1=Broadcast time, date, holiday flag and OAT (as like existing pro_dialog control). 2=For Standalone chiller. Daylight savings time & holiday determination will be done without broadcasting through the bus.	2	—	Ccnbroad
	OAT Broadcast				
	Bus #	0 to 239	0		Oatbusnm
	Element #	0 to 239	0		Oatlocad
	DAYLIGHT SAVINGS SELECT	Disable/Enable	Disable		dayl_sel
	ENTERING				
	Month	1 to 12	3		Startmon
	Day of week* (1=Monday)	1 to 7	7		Startdow
	Week Number of Month†	1 to 5	5		Startwom
	LEAVING				
	Month	1 to 12	10		Stopmon
	Day of week* (1=Monday)	1 to 7	7		Stopdow
	Week Number of Month†	1 to 5	5		stopwom

*Day of week where daylight savings time will occur in the morning (at 2:00 am). In the default setting, daylight savings time occurs on Sunday (7) morning, 1 hour shall be added when entering and 1 hour subtracted when leaving.

†Date once selected (from 1) shall occur in the week number entered. 1: If day of week selected is 7 (Sunday) time change will occur the first Sunday (week number 1) in the month. 5: If day of week selected is 7 (Sunday) time change will occur the last Sunday of the month (week number 4 or 5).

CONFIGURATION DISPLAY TABLES (cont)

TABLE	DISPLAY NAME	RANGE	DEFAULT	UNITS	POINT NAME
!CtrID / PD5_RBRQ:	Device Name	8 chars			
	Description	24 chars	PRO-DIALOG 5 30RB&30RQ		
	Location	24 chars			
	Software Part Number	16 chars	CSA-SR-20C460301		
	Model Number	20 chars			
	Serial Number	12 chars			
	Reference Number	24 chars			

TABLE	DISPLAY NAME	RANGE	DEFAULT	UNITS	POINT NAME
DISPCONF	Metric Display on STDU	Yes/No	No		DISPUNIT
	Language Selection 0=English 1=Espanol 2=Francais 3=Portugues 4=English2	0=English 1=Espanol 2=Francais 3=Portugues 4=English2	0		LANGUAGE
FACTORY	Unit Type	1 (Cooling Only), 2 (not supported)	1		unit_typ
	Unit Capacity*	56 to 500	Unit Dependent	tons	unitsize
	NB Fans on Varifan Cir A†	0 to 6	0		varfan_a
	NB Fans on Varifan Cir B†	0 to 6	0		varfan_b
	NB Fans on Varifan Cir C†	0 to 6	0		varfan_c
	Air Cooled Reclaim Sel	Yes/No	No		recl_opt
	Free Cooling Select	Yes/No	No		free_opt
	Electrical Heat Stages	0 to 4	0		ehs_sel
	Boiler Command Select	Yes/No	No		boil_sel
	Power Frequence 60HZ Sel	Yes/No	Yes		freq_60H
	Energy Management Module	Yes/No	No		emm_nrcp
	Hot Gas Bypass Select	0-Hot gas bypass valve (not used) 1=Used for Startup only 2=Close Control 3=High Ambient (if High pressure mode is active, close control shall be active)	0		hgbp_sel
	Pro_dialog Display Selec	No=Use *Comfort*Link™ display as user interface (factory installed) Yes=Use Pro_dialog synopsis as user interface (not supported)	No (Must be set to No for *Comfort*Link display)		pd4_disp
	Factory Password	0 to 150	111		fac_pass
	High Static Fan Control	Not Supported	No		hsta_fan
	MCHX Exchanger Select	Yes/No	Unit Dependent		mchx_sel
	VLT Fan Drive Select	Not Supported	0		vlt_sel
	VLT Fan Drive RPM	Not Supported	0		vlt_rpm
	Desuperheater Select	Not Supported	No		desuper
	Dual Speed Fan Select	Not Supported	No		dual_fan

* Enter unit size. This item allows the controls to determine capacity of each compressor and the total number of fans on each circuit based on a compressor arrangement array (can be viewed in table FACTORY2). It is not necessary to enter compressor capacity and number of fans on each circuit. See the Unit Compressor Configuration table below as a reference.

† Number of fans controlled directly by a variable speed fan actuator using 0 to 10 vdc signal. This will enable the controls to determine the remaining discrete fan staging outputs from the total fans on each circuit. Configure to 1 for low ambient head pressure control.

UNIT COMPRESSOR CAPACITY (%) CONFIGURATION

30RB UNIT SIZE	POINT NAME (FACTORY2 TABLE)											
	cap_a1	cap_a2	cap_a3	cap_a4	cap_b1	cap_b2	cap_b3	cap_b4	cap_c1	cap_c2	cap_c3	cap_c4
060	20	20	0	0	20	0	0	0	0	0	0	0
070	25	25	0	0	20	0	0	0	0	0	0	0
080	20	20	0	0	20	20	0	0	0	0	0	0
090	25	25	0	0	20	20	0	0	0	0	0	0
100	25	25	0	0	25	25	0	0	0	0	0	0
110	25	25	0	0	20	20	20	0	0	0	0	0
120	25	25	0	0	25	25	25	0	0	0	0	0
130	25	25	25	0	20	20	20	0	0	0	0	0
150	25	25	25	0	25	25	25	0	0	0	0	0
160	25	25	25	25	20	20	20	0	0	0	0	0
170	25	25	25	25	25	25	25	0	0	0	0	0
190	25	25	25	25	25	25	25	25	0	0	0	0
210	25	25	25	0	20	20	20	0	25	25	25	0
225	25	25	25	0	25	25	25	0	25	25	25	0
250	25	25	25	0	25	25	25	0	25	25	25	25
275	25	25	25	25	25	25	25	25	25	25	25	0
300	25	25	25	25	25	25	25	25	25	25	25	25

CONFIGURATION DISPLAY TABLES (cont)

TABLE	DISPLAY NAME	RANGE	DEFAULT	UNITS	POINT NAME
FACTORY2	Compressor A1 Capacity	0 to 99	0		cap_a1
	Compressor A2 Capacity	0 to 99	0		cap_a2
	Compressor A3 Capacity	0 to 99	0		cap_a3
	Compressor A4 Capacity	0 to 99	0		cap_a4
	Compressor B1 Capacity	0 to 99	0		cap_b1
	Compressor B2 Capacity	0 to 99	0		cap_b2
	Compressor B3 Capacity	0 to 99	0		cap_b3
	Compressor B4 Capacity	0 to 99	0		cap_b4
	Compressor C1 Capacity	0 to 99	0		cap_c1
	Compressor C2 Capacity	0 to 99	0		cap_c2
	Compressor C3 Capacity	0 to 99	0		cap_c3
	Compressor C4 Capacity	0 to 99	0		cap_c4
	Circuit A Total Fans NB	0 to 6	0		nb_fan_a
	Circuit B Total Fans NB	0 to 6	0		nb_fan_b
	Circuit C Total Fans NB	0 to 6	0		nb_fan_c
	EXV A Maximum Steps Numb	0/15000	0=EXV not used		exva_max
	EXV B Maximum Steps Numb	0/15000	0		exvb_max
	EXV C Maximum Steps Numb	0/15000	0		exvc_max

NOTES:
1. Compressor capacity will be automatically be determined if unit size entered in FACTORY1 table matches the values in the unit compressor configuration table.
2. Total number of fans includes fans controlled by a variable speed fan. This value will be automatically populated if unit size entered in FACTORY1 table matches the values in the unit compressor configuration table.

TABLE	DISPLAY NAME	RANGE	DEFAULT	UNITS	POINT NAME
HOLIDAY/ HOLDY01S to HOLDY16S	Holiday Start Month	0-12	0		HOL_MON
	Start Day	0-31	0		HOL_DAY
	Duration (days)	0-99	0		HOL_LEN
MST_SLV	MASTER SLAVE CONTROL				
	Master/Slave Select	0=Disable	0		ms_sel
	0=Disable	1=Master			
	1=Master	2=Slave			
	2=Slave				
	Master Control Type	1=Local Control	1		ms_ctrl
	1=Local Control	2=Remote Control			
	2=Remote Control	3=CCN Control			
	3=CCN Control				
	Slave Address	1 to 236	2		slv_addr
	Lag Start Timer	2 to 30	10	min	lstr_tim
	Lead/Lag Balance	Yes/No	No		ll_bal
	Lead/Lag Balance Delta	40 to 400	168	hours	ll_bal_d
	Lag Unit Pump Control	0=Stop if Unit Stops	0		lag_pump
	0=Stop if Unit Stops	1=Run if Unit Stops			
	1=Run if Unit Stops				
	Lead Pulldown Time	0 to 60	0	min	lead_pul
OCCDEFCS/ OCCPC01S and OCCPC02S	Timed Override Hours	0-4	0		OVR_EXT
	Period 1 DOW (MTWTFSSH)	0/1	11111111		DOW1
	Occupied From	00:00-24:00	00:00		OCCTOD1
	Occupied To	00:00-24:00	24:00		UNOCTOD1
	Period 2 DOW (MTWTFSSH)	0/1	11111111		DOW2
	Occupied From	00:00-24:00	00:00		OCCTOD2
	Occupied To	00:00-24:00	00:00		UNOCTOD2
	Period 3 DOW (MTWTFSSH)	0/1	00000000		DOW3
	Occupied From	00:00-24:00	00:00		OCCTOD3
	Occupied To	00:00-24:00	00:00		UNOCTOD3
	Period 4 DOW (MTWTFSSH)	0/1	00000000		DOW4
	Occupied From	00:00-24:00	00:00		OCCTOD4
	Occupied To	00:00-24:00	00:00		UNOCTOD4
	Period 5 DOW (MTWTFSSH)	0/1	00000000		DOW5
	Occupied From	00:00-24:00	00:00		OCCTOD5
	Occupied To	00:00-24:00	00:00		UNOCTOD5
	Period 6 DOW (MTWTFSSH)	0/1	00000000		DOW6
	Occupied From	00:00-24:00	00:00		OCCTOD6
	Occupied To	00:00-24:00	00:00		UNOCTOD6
	Period 7 DOW (MTWTFSSH)	0/1	00000000		DOW7
	Occupied From	00:00-24:00	00:00		OCCTOD7
	Occupied To	00:00-24:00	00:00		UNOCTOD7
	Period 8 DOW (MTWTFSSH)	0/1	00000000		DOW8
	Occupied From	00:00-24:00	00:00		OCCTOD8
	Occupied To	00:00-24:00	00:00		UNOCTOD8

CONFIGURATION DISPLAY TABLES (cont)

TABLE	DISPLAY NAME	RANGE	DEFAULT	UNITS	POINT NAME
USER	Circuit Loading Sequence	0-3	0		lead_cir
	0=Auto,1=A Lead	0=Auto,			
	2=B Lead, 3 =C Lead	1=A Lead			
		2=B Lead,			
		3 =C Lead			
	Staged Loading Sequence	No/Yes	No		seq_typ
	Ramp Loading Select	No/Yes	No		ramp_sel
	Unit Off to On Delay	1-15	1	Min	off_on_d
	Cooler Pumps Sequence	0-4	0		pump_seq
	0=No Pump	0=No Pump			
	1=One Pump Only	1=One Pump Only			
	2=Two Pumps Auto	2=Two Pumps Auto			
	3=Pump#1 Manual	3=Pump#1 Manual			
	4=Pump#2 Manual	4=Pump#2 Manual			
	Pump Auto Rotation Delay	24-3000	48	hours	pump_del
	Pump Sticking Protection	No/Yes	No		pump_per
	Stop Pump During Standby	No/Yes	No		pump_sby
	Flow Checked if Pump Off	No/Yes	Yes		pump_loc
	Auto Changeover Select	No/Yes	No		auto_sel
	Cooling Reset Select	0-4	0		cr_sel
	Heating Reset Select	0-4	0		hr_sel
	1 =OAT,	1 =OAT,			
	0=None	0=None			
	2=Delta T,	2=Delta T,			
	3=4-20mA Control	3=4-20mA Control			
	4=Space Temp	4=Space Temp			
	Demand Limit Type Select	0-2	0		lim_sel
	0=None	0=None			
	1=Switch Control	1=Switch Control			
	2=4-20mA Control	2=4-20mA Control			
	mA For 100% Demand Limit	0-20	0	ma	lim_mx
	mA For 0% Demand Limit	0-20	0	ma	lim_ze
	Heating OAT Threshold	-4-32	5	°F	heat_th
	Boiler OAT Threshold	5-59	14	°F	boil_th
	Free Cooling	-4-37.4	32	°F	free_oat
	OAT Threshold	-4-37.4	32.0	°F	free_th
	Full Load Timeout	5-60	15	min	fc_tmout
	Pre_Cooling Selected	No/Yes	No		pre_cool
	HSM Both Commande Select	No/Yes	No		both_sel
	Elec Stage OAT Threshold	23-70	41	°F	ehs_th
	1 Elec Stage for backup	No/Yes	No		ehs_back
	Electrical Pulldown Time	0-60	0	min	ehs_pull
	Quick EHS for Defrost	No/Yes	No		ehs_defr
	Night control				
	Start Hour	00:00-24:00	00:00		nh_start
	End Hour	00:00-24:00	00:00		nh_end
	Capacity Limit	0-100	100	%	nh_cnfg
	Ice Mode Enable	No/Yes	No		ice_cnfg
	Menu Description Select	No/Yes	Yes		menu_des
	Pass For All User Config	No/Yes	No		all_pass

NOTES:
1. Flow checked if pump off needed when a command is sent to the primary pump to prevent cooler from freezing in winter conditions. Command will set the cooler flow switch to closed while the controls stop the cooler pump. The controls may then generate an alarm. If this decision is active, the cooler flow switch is not checked when the cooler pump is stopped.
2. If cooling reset select set point has been selected the set point based on 4 to 20 mA input signal through *Comfort*Link™ controls, then a 4 to 20 mA reset function shall be ignored. Configuration 3 (4-20mA Control) and 4 (Space Temperature) shall require an Energy Management Module.
3. Configuration 2 (4-20mA Control) shall require an Energy Management Module. Configuration 1 Switch Demand limit provides 3 step demand limit if an Energy Management Module is present. Otherwise, only one step is allowed.

SETPOINT DISPLAY TABLES

TABLE	DISPLAY NAME	RANGE	DEFAULT	UNITS	POINT NAME
SETPOINT	COOLING				
	Cooling Setpoint 1	–20.0-78.8	44.0	°F	csp1
	Cooling Setpoint 2	–20.0-78.8	44.0	°F	csp2
	Cooling Ice Setpoinp	–20.0-32.0	44.0	°F	ice_sp
	OAT No Reset Value	14-125	14.0	°F	oatcr_no
	OAT Full Reset Value	14-125	14.0	°F	oatcr_fu
	Delta T No Reset Value	0-25	0.0	^F	dt_cr_no
	Delta T Full Reset Value	0-25	0.0	^F	dt_cr_fu
	Current No Reset Value	0-20	0.0	ma	v_cr_no
	Current Full Reset Value	0-20	0.0	ma	v_cr_fu
	Space T No Reset Value	14-125	14.0	°F	spacr_no
	Space T Full Reset Value	14-125	14.0	°F	spacr_fu
	Cooling Reset Deg. Value	–30-30	0.0	^F	cr_deg
	Cooling Ramp Loading	0.2-2.0	1.0	^F	cramp_sp
	HEATING				
	Heating Setpoint 1	68.0-122.0	100.0	°F	hsp1
	Heating Setpoint 2	68.0-122.0	100.0	°F	hsp2
	OAT No Reset Value	14-125	14.0	°F	oathr_no
	OAT Full Reset Value	14-125	14.0	°F	oathr_fu
	Delta T No Reset Value	0-25	0.0	^F	dt_hr_no
	Delta T Full Reset Value	0- 25	0.0	^F	dt_hr_fu
	Current No Reset Value	0-20	0.0	ma	v_hr_no
	Current Full Reset Value	0-20	0.0	ma	v_hr_fu
	Heating Reset Deg. Value	–30-30	0.0	^F	hr_deg
	Heating Ramp Loading	0.2-2.0	1.0	^F	hramp_sp
	AUTO CHANGEOVER				
	Cool Changeover Setpt	39-122	75.0	°F	cauto_sp
	Heat Changeover Setpt	32-115	64.0	°F	hauto_sp
	MISCELLANEOUS				
	Switch Limit Setpoint 1	0-100	100	%	lim_sp1
	Switch Limit Setpoint 2	0-100	100	%	lim_sp2
	Switch Limit Setpoint 3	0-100	100	%	lim_sp3
	Reclaim Setpoint	95.0-122.0	122.0	°F	rsp
	Reclaim Deadband	5-27	9.0	^F	hr_deadb
	Head Setpoint	40.0-122.0	95.0	°F	head_stp
	Fan Max Speed	0-100	100	%	fan_smax

MAINTENANCE DISPLAY TABLES

TABLE	DISPLAY NAME	RANGE	UNITS	POINT NAME	WRITE STATUS
DEFROSTM	CIR A DEFROST CONTROL				
	Exchanger Frost Factor	0-100	%	frost_a	
	Next Sequence Allowed in	nnn	min	def_se_a	
	Defrost Active?	True/False		mode[19]	
	Defrost Temperature	±nnn.n	°F	DEFRT_A	
	Defrost Duration	nnn	min	defr_dua	
	Fan Sequence Started	n		def_fa_a	
	Override State	nn		over_d_a	
	Mean SST Calculation	±nnn.n	°F	sst_dm_a	
	Delta: OAT - Mean SST	±nnn.n	^F	delt_a	
	Reference Delta	±nnn.n	^F	delt_r_a	
	Delta - Reference Delta	±nnn.n	°F	delt_v_a	
	Frost Integrator Gain	n.n		fr_int_a	
	Defrost Fan Start Cal A	0.00	psi	def_ca_a	
	Defrost Fan Offset Cal A	0.00	psi	def_of_a	
	CIR B DEFROST CONTROL				
	Exchanger Frost Factor	0-100	%	frost_b	
	Next Sequence Allowed in	nnn	min	def_se_b	
	Defrost Active?	True/False		mode[20]	
	Defrost Temperature	±nnn.n	°F	DEFRT_B	
	Defrost Duration	nnn	min	defr_dub	
	Fan Sequence Started?	n		def_fa_b	
	Override State	nn		over_d_b	
	Mean SST calculation	±nnn.n	°F	sst_dm_b	
	Delta: OAT - Mean SST	±nnn.n	^F	delt_b	
	Reference Delta	±nnn.n	^F	delt_r_b	
	Delta - Reference Delta	±nnn.n	^F	delt_v_b	
	Frost Integrator Gain	n.n		fr_int_b	
	Defrost Fan Start Cal B	0.00	psi	def_ca_b	
	Defrost Fan Offset Cal B	0.00	psi	def_of_b	

NOTES: Tables for display only. Forcing shall not be supported on this maintenance screen.

TABLE	DISPLAY NAME	RANGE	UNITS	POINT NAME	WRITE STATUS
FANCTRL	Cir A SCT Control Point		°F	sct_sp_a	
	Cir A SCT Candidate		°F	sct_fu_a	
	Cir A Fan Drive Power		kW	drva_pwr	
	Cir A Fan Drive Version			drva_ver	
	Cir B SCT Control Point		°F	sct_sp_b	
	Cir B SCT Candidate		°F	sct_fu_b	
	Cir B Fan Drive Power		kW	drvb_pwr	
	Cir B Fan Drive Version			drvb_ver	
	Cir C SCT Control Point		°F	sct_sp_c	
	Cir C SCT Candidate		°F	sct_fu_c	
	Cir C Fan Drive Power		kW	drvc_pwr	
	Cir C Fan Drive Version			drvc_ver	
LAST_POR	Power On 1: day-mon-year	nnnnnn		date_on1	
	Power On 1: hour-minute	nnnn		time_on1	
	PowerDown 1:day-mon-year	nnnnnn		date_of1	
	PowerDown 1:hour-minute	nnnn		time_of1	
	Power On 2: day-mon-year	nnnnnn		date_on2	
	Power On 2: hour-minute	nnnn		time_on2	
	PowerDown 2:day-mon-year	nnnnnn		date_of2	
	PowerDown 2:hour-minute	nnnn		time_of2	
	Power On 3: day-mon-year	nnnnnn		date_on3	
	Power On 3: hour-minute	nnnn		time_on3	
	PowerDown 3:day-mon-year	nnnnnn		date_of3	
	PowerDown 3:hour-minute	nnnn		time_of3	
	Power On 4: day-mon-year	nnnnnn		date_on4	
	Power On 4: hour-minute	nnnn		time_on4	
	PowerDown 4:day-mon-year	nnnnnn		date_of4	
	PowerDown 4:hour-minute	nnnn		time_of4	
	Power On 5: day-mon-year	nnnnnn		date_on5	
	Power On 5: hour-minute	nnnn		time_on5	
	PowerDown 5:day-mon-year	nnnnnn		date_of5	
	PowerDown 5:hour-minute	nnnn		time_of5	
LOADFACT	Average Ctrl Water Temp	±nnn.n	°F	ctrl_avg	
	Differential Water Temp	±nnn.n	°F	diff_wt	
	Water Delta T	±nnn.n	^F	delta_t	
	Control Point	±nnn.n	°F	CTRL_PNT	
	Reset Amount	±nnn.n	^F	reset	
	Controlled Temp Error	±nnn.n	^F	tp_error	
	Actual Capacity	nnn	%	cap_t	
	Actual Capacity Limit	nnn	%	cap_lim	
	Current Z Multiplier Val	±n.n		zm	
	Load/Unload Factor	±nnn.n	%	smz	
	Active Stage Number	nn		cur_stag	
	Active Capacity Override	nn		over_cap	
	EXV Position Limit Cir A	nnn.n	%	exvlim_a	
	SH Setpoint Circuit A	nn.n	^F	sh_sp_a	
	Cooler Exchange DT Cir A	nn.n	^F	pinch_a	
	Cooler Pinch Ctl Point A	nn.n	^F	pinch_spa	
	EXV Override Circuit A	nn		ov_exv_a	
	EXV Position Limit Cir B	nnn.n	%	exvlim_b	
	SH Setpoint Circuit B	nn.n	^F	sh_sp_b	
	Cooler Exchange DT Cir B	nn.n	^F	pinch_b	
	Cooler Pinch Ctl Point B	nn.n	^F	pinch_spb	
	EXV Override Circuit B	nn		ov_exv_b	
	EXV Position Limit Cir C	nnn.n	%	exvlim_c	
	SH Setpoint Circuit C	nn.n	^F	sh_sp_c	
	Cooler Exchange DT Cir C	nn.n	^F	pinch_c	
	Cooler Pinch Ctl Point C	nn.n	^F	pinch_spc	
	EXV Override Circuit C	nn		ov_exv_c	
	EHS Ctrl Override	nn		over_ehs	
	Requested Electric Stage	nn		eh_stage	
	Electrical Pulldown?	True/False		Ehspulld	
	Required Cooling Power			req_pow	
	Free Cool Override Cir A			ov_fc_a	
	Free Cool Override Cir B			ov_fc_b	

MAINTENANCE DISPLAY TABLES (cont)

TABLE	DISPLAY NAME	RANGE	UNITS	POINT NAME	WRITE STATUS
MSTSLAVE	MASTER/SLAVE CONTROL				
	Unit is Master or Slave	Disable/Master/Slave		mstslv	
	Master Control Type*	Local/Remote/CCN		ms_ctrl	
	Master/Slave Ctrl Active	True/False		ms_activ	
	Lead Unit is the	Master/Slave		lead_sel	
	Slave Chiller State†	0/1/2/3/4/5		slv_stat	
	Slave Chiller Total Cap	0-100	%	slv_capt	
	Lag Start Delay**	1-30	min	l_strt_d	
	Lead/Lag Hours Delta*	±nnnnn	hours	ll_hr_d	
	Lead/Lag Changeover?**	Yes/No		ll_chang	
	Lead Pulldown?	Yes/No		ll_pull	
	Master/Slave Error	nn		ms_error	
	Max Available Capacity?††	True/False		cap_max	

*Always CCN for the slave chiller.
†Slave chiller chillstat value.
**This decision is consistent for Master chiller only. It shall be set by default to 0 for the slave chiller.
††This item is true when chiller has loaded its total available capacity tonnage.

TABLE	DISPLAY NAME	RANGE	UNITS	POINT NAME	WRITE STATUS
OCCDEFCM/ OCC1PO1S OCC2PO2S	Current Mode (1=occup.)	0/1		MODE	
	Current Occp Period #	1 to 8		PER_NO	
	Timed-Override in Effect	Yes/No		OVERLAST	
	Timed-Override Duration	0-4	hours	OVR_HRS	
	Current Occupied Time	00:00-23:59		STRTTIME	
	Current Unoccupied Time	00:00-23:59		ENDTIME	
	Next Occupied Day	Mon-Sun		NXTOCDAY	
	Next Occupied Time	00:00-23:59		NXTOCTIM	
	Next Unoccupied Day	Mon-Sun		NXTUNDAY	
	Next Unoccupied Time	00:00-23:59		NXTUNTIM	
	Prev Unoccupied Day	Mon-Sun		PRVUNDAY	
	Prev Unoccupied Time	00:00-23:59		PRVUNTIM	

TABLE	DISPLAY NAME	RANGE	UNITS	POINT NAME	WRITE STATUS
PR_LIMIT	Discharge A Temp Average	±nnn.n	°F	sdt_m_a	
	Discharge A Temp Rate	±nnn.n	^F	sdt_mr_a	
	Discharge A Gas Limit	±nnn.n	°F	sdtlim_a	
	Suction A Temp Average	±nnn.n	°F	sst_m_a	
	Discharge A Tp Average 2	±nnn.n	^F	sdt_m2_a	
	Discharge A Temp Limit2	±nnn.n	^F	sdtlim2a	
	Discharge B Temp Average	±nnn.n	°F	sdt_m_b	
	Discharge B Temp Rate	±nnn.n	^F	sdt_mr_b	
	Discharge B Gas Limit	±nnn.n	°F	sdtlim_b	
	Suction B Temp Average	±nnn.n	°F	sst_m_b	
	Discharge C Temp Average	±nnn.n	°F	sdt_m_c	
	Discharge C Temp Rate	±nnn.n	^F	sdt_mr_c	
	Discharge C Gas Limit	±nnn.n	°F	sdtlim_c	
	Suction C Temp Average	±nnn.n	°F	sst_m_c	

NOTE: Table for display only. Used for Cooling and Heat Pump Compressor Envelope.

TABLE	DISPLAY NAME	RANGE	UNITS	POINT NAME	WRITE STATUS
SERMAINT	Reset Maintenance Alert 1 to 6: reset individually 7: reset all	nn		S_RESET	forcible
	OPERATION WARNINGS				
	1 — Refrigerant Charge	Normal/Low/Disable		charge_m	
	2 — Water Loop Size	Normal/Low/Disable		wloop_m	
	GENERAL SERVICING DELAYS				
	3 — Pump 1 (days)	0-1000/Alert/Disable		cpump1_m	
	4 — Pump 2 (days)	0-1000/Alert/Disable		cpump2_m	
	5 — Reclaim Pump (days)	0-1000/Alert/Disable		hpump_m	
	6 — Water Filter (days)	0-1000/Alert/Disable		wfilte_m	

SERVICE DISPLAY TABLES

TABLE	DISPLAY NAME	RANGE	DEFAULT	UNITS	POINT NAME	WRITE STATUS
CP_UNABL	Compressor A1 Disable	No/Yes	No		un_cp_a1	
	Compressor A2 Disable	No/Yes	No		un_cp_a2	
	Compressor A3 Disable	No/Yes	No		un_cp_a3	
	Compressor A4 Disable	No/Yes	No		un_cp_a4	
	Compressor B1 Disable	No/Yes	No		un_cp_b1	
	Compressor B2 Disable	No/Yes	No		un_cp_b2	
	Compressor B3 Disable	No/Yes	No		un_cp_b3	
	Compressor B4 Disable	No/Yes	No		un_cp_b4	
	Compressor C1 Disable	No/Yes	No		un_cp_c1	
	Compressor C2 Disable	No/Yes	No		un_cp_c2	
	Compressor C3 Disable	No/Yes	No		un_cp_c3	
	Compressor C4 Disable	No/Yes	No		un_cp_c4	

NOTES:
1. Table used to disable compressors for maintenance purposes. The capacity control will consider that these compressors (once set to YES) are failed manually (no alarm will appear).
2. All data will be re-initialized to “NO” at Power on reset on units using pro_dialog display. For *Comfort*Link™ display, data shall be saved.

TABLE	DISPLAY NAME	RANGE	DEFAULT	UNITS	POINT NAME	WRITE STATUS
MAINTCFG	MAINTENANCE CONFIG					
	Servicing Alert	Enable/Disable	Disable		s_alert	
	Refrigerant Charge Ctrl	Enable/Disable	Disable		charge_c	
	Water Loop Control	Enable/Disable	Disable		wloop_c	
	CPump 1 Ctl Delay (days)	0-1000	0		cpump1_c	
	CPump 2 Ctl Delay (days)	0-1000	0		cpump2_c	
	HPump Ctrl Delay (days)	0-1000	0		hpump_c	
	Water Filter Ctrl (days)	0-1000	0		wfilte_c	

TABLE	DISPLAY NAME	RANGE	DEFAULT	UNITS	POINT NAME	WRITE STATUS
SERVICE1	Cooler Fluid Type	1-3	1		flui_typ	
	Entering Fluid Control	Yes/No	No		ewt_opt	
	Prop PID Gain Varifan	–20.0-20.0	2.0		hd_pg	
	Int PID Gain Varifan	–5.0-5.0	0.2		hd_ig	
	Deri PID Gain Varifan	–20.0-20.0	0.4		hd_dg	
	EXV A Superheat Setpoint	2.5-54.0	9.0	^F	sh_sp_a	
	EXV B Superheat Setpoint	2.5-54.0	9.0	^F	sh_sp_b	
	EXV C Superheat Setpoint	2.5-54.0	9.0	^F	sh_sp_c	
	EXV MOP Setpoint	30.8-50.0	50.0	°F	mop_sp	
	High Pressure Threshold	500-640	609	psi	hp_th	
	Cooler Heater Delta Spt	1-6	2	^F	heatersp	
	Brine Freeze Setpoint	–20-34	34	°F	lowestsp	
	Minimum LWT Setpoint		38	°F	mini_lwt	
	Auto Start When SM Lost	Enable/Disable	Disable		auto_sm	
	Auto Z Multiplier Setpt	4-10	6		zm_spt	
	Maximum Z Multiplier	1.0-6.0	6.0		hc_zm	
	Recl Valve Min Position	0-50	20	%	min_3w	
	Recl Valve Max Position	20-100	100	%	max_3w	
	User Password	0-150	11	N/A	use_pass	
	Service Password	0-150	88	N/A	ser_pass	
	SPM Board Configuration	0 or 1 for each digit	00001010		spm_conf	
	Maximum Ducted Fan Speed	0-100	100	%	fan_max	

NOTE: This table shall be downloadable at any time. However, modified value shall not be used by tasks until the unit is in OFF state. This shall not apply to the Varifan gains that shall be modified at any time and used immediately by the head pressure control tasks even if the unit is in operation.

SERVICE DISPLAY TABLES (cont)

TABLE	DISPLAY NAME	RANGE	UNITS	POINT NAME	WRITE STATUS
UPDHRFAN	TABLE TO BE USED FOR				
	RUN TIMES & START				
	UPDATE IN CASE OF CONTROL RETROFIT				
	FAN Operating Hours				
	Circuit A Fan #1 Hours	nnnnn	hours	hr_fana1	
	Circuit A Fan #2 Hours	nnnnn	hours	hr_fana2	
	Circuit A Fan #3 Hours	nnnnn	hours	hr_fana3	
	Circuit A Fan #4 Hours	nnnnn	hours	hr_fana4	
	Circuit A Fan #5 Hours	nnnnn	hours	hr_fana5	
	Circuit A Fan #6 Hours	nnnnn	hours	hr_fana6	
	Circuit B Fan #1 Hours	nnnnn	hours	hr_fanb1	
	Circuit B Fan #2 Hours	nnnnn	hours	hr_fanb2	
	Circuit B Fan #3 Hours	nnnnn	hours	hr_fanb3	
	Circuit B Fan #4 Hours	nnnnn	hours	hr_fanb4	
	Circuit B Fan #5 Hours	nnnnn	hours	hr_fanb5	
	Circuit B Fan #6 Hours	nnnnn	hours	hr_fanb6	
	Circuit C Fan #1 Hours	nnnnn	hours	hr_fanc1	
	Circuit C Fan #2 Hours	nnnnn	hours	hr_fanc2	
	Circuit C Fan #3 Hours	nnnnn	hours	hr_fanc3	
	Circuit C Fan #4 Hours	nnnnn	hours	hr_fanc4	
	Circuit C Fan #5 Hours	nnnnn	hours	hr_fanc5	
	Circuit C Fan #6 Hours	nnnnn	hours	hr_fanc6	
	WATER PUMP				
	WATER PUMP #1 Hours	nnnnn	hours	hr_cpum1	
	WATER PUMP #2 Hours	nnnnn	hours	hr_cpum2	
	Heat Reclaim Pump Hours	nnnnn	hours	hr_hpump	
	FREE COOLING PUMPS				
	Free Cool A Pump Hours	nnnnn	hours	hr_fcp_a	
	Free Cool B Pump Hours	nnnnn	hours	hr_fcp_b	
	Free Cool C Pump Hours	nnnnn	hours	hr_fcp_c	

NOTE: This table shall be used for purposes of transplanting the devices on time in the event of a module hardware failure or software upgrade via downloading. It shall be usable only if all items are still null. Afterwards, its access shall be denied.

TABLE	DISPLAY NAME	RANGE	UNITS	POINT NAME	WRITE STATUS
UPDTHOUR	TABLE TO BE USED FOR RUN TIMES UPDATE IN CASE OF CONTROL RETROFIT				
	Machine Operating Hours	nnnnn	hours	hr_mach	
	Machine Starts	nnnnn		st_mach	
	Compressor A1 Hours	nnnnn	hours	hr_cp_a1	
	Compressor A2 Hours	nnnnn	hours	hr_cp_a2	
	Compressor A3 Hours	nnnnn	hours	hr_cp_a3	
	Compressor A4 Hours	nnnnn	hours	hr_cp_a4	
	Compressor A1 Starts	nnnnn		st_cp_a1	
	Compressor A2 Starts	nnnnn		st_cp_a2	
	Compressor A3 Starts	nnnnn		st_cp_a3	
	Compressor A4 Starts	nnnnn		st_cp_a4	
	Compressor B1 Hours	nnnnn	hours	hr_cp_b1	
	Compressor B2 Hours	nnnnn	hours	hr_cp_b2	
	Compressor B3 Hours	nnnnn	hours	hr_cp_b3	
	Compressor B4 Hours	nnnnn	hours	hr_cp_b4	
	Compressor B1 Starts	nnnnn		st_cp_b1	
	Compressor B2 Starts	nnnnn		st_cp_b2	
	Compressor B3 Starts	nnnnn		st_cp_b3	
	Compressor B4 Starts	nnnnn		st_cp_b4	
	Compressor C1 Hours	nnnnn	hours	hr_cp_c1	
	Compressor C2 Hours	nnnnn	hours	hr_cp_c2	
	Compressor C3 Hours	nnnnn	hours	hr_cp_c3	
	Compressor C4 Hours	nnnnn	hours	hr_cp_c4	
	Compressor C1 Starts	nnnnn		st_cp_c1	
	Compressor C2 Starts	nnnnn		st_cp_c2	
	Compressor C3 Starts	nnnnn		st_cp_c3	
	Compressor C4 Starts	nnnnn		st_cp_c4	
	Circuit A Defrost Number	nnnnn		nb_def_a	
	Circuit B Defrost Number	nnnnn		nb_def_b	

NOTE: This table shall be used for purposes of transplanting the devices on time in the event of a module hardware failure or software upgrade via downloading. It shall be usable only if all items are still null. Afterwards, its access shall be denied.

APPENDIX C — CCN ALARM DESCRIPTION

ALARM CODE	ALARM TEXT DESCRIPTION AND CCN MESSAGE
Thermistor Failure	
th-01	Water exchanger Entering Fluid Thermistor
th-02	Water exchanger Leaving Fluid Thermistor
th-03	Circuit A Defrost Thermistor
th-04	Circuit B Defrost Thermistor
th-08	Reclaim Condenser Entering Thermistor
th-09	Reclaim Condenser Leaving Thermistor
th-10	OAT Thermistor
th-11	MASTER/Slave Common Fluid Thermistor
th-12	Circuit A Suction Gas Thermistor
th-13	Circuit B Suction Gas Thermistor
th-14	Circuit C Suction Gas Thermistor
th-18	Circuit A Condenser Subcooling Liquid Thermistor
th-19	Circuit B Condenser Subcooling Liquid Thermistor
th-21	Space Temperature Thermistor
Pressure Transducer Failure	
Pr-01	Circuit A Discharge Transducer
Pr-02	Circuit B Discharge Transducer
Pr-03	Circuit C Discharge Transducer
Pr-04	Circuit A Suction Transducer
Pr-05	Circuit B Suction Transducer
Pr-06	Circuit C Suction Transducer
Pr-07	Circuit A Reclaim Pumpdown Pressure Transducer
Pr-08	Circuit B Reclaim Pumpdown Pressure Transducer
Communication with Slave Board Failure	
Co-A1	Loss of communication with Compressor Board A1
Co-A2	Loss of communication with Compressor Board A2
Co-A3	Loss of communication with Compressor Board A3
Co-A4	Loss of communication with Compressor Board A4
Co-B1	Loss of communication with Compressor Board B1
Co-B2	Loss of communication with Compressor Board B2
Co-B3	Loss of communication with Compressor Board B3
Co-B4	Loss of communication with Compressor Board B4
Co-C1	Loss of communication with Compressor Board C1
Co-C2	Loss of communication with Compressor Board C2
Co-C3	Loss of communication with Compressor Board C3
Co-C4	Loss of communication with Compressor Board C4
Co-E1	Loss of communication with EXV Board Number 1
Co-E2	Loss of communication with EXV Board Number 2
Co-F1	Loss of communication with Fan Board Number 1
Co-F2	Loss of communication with Fan Board Number 2
Co-F3	Loss of communication with Fan Board Number 3
Co-O1	Loss of communication with Free Cooling Board
Co-O2	Loss of communication with Electrical Heaters Board
Co-O3	Loss of communication with Energy Management NRCP2 Board
Co-O4	Loss of communication with Heat Reclaim Board
Ct-01	Circuit A Welded Contactor Failure
Ct-02	Circuit B Welded Contactor Failure
Ct-03	Circuit C Welded Contactor Failure

APPENDIX C — CCN ALARM DESCRIPTION (cont)

ALARM CODE	ALARM TEXT DESCRIPTION AND CCN MESSAGE
	Process Failure
FC-n0	No factory configuration
FC-01	Illegal factory configuration Number #1 to nn
MC-nn	Master chiller configuration error Number #1 to nn
P-01	Water Exchanger Freeze Protection
P-05	Circuit A Low Suction Temperature
P-06	Circuit B Low Suction Temperature
P-07	Circuit C Low Suction Temperature
P-08	Circuit A High Superheat
P-09	Circuit B High Superheat
P-10	Circuit C High Superheat
P-11	Circuit A Low Superheat
P-12	Circuit B Low Superheat
P-13	Circuit C Low Superheat
P-14	Cooler Interlock Failure
P-15	Condenser Flow Switch Failure
P-16	Compressor A1 Not Started or Pressure Increase not established
P-17	Compressor A2 Not Started or Pressure Increase not established
P-18	Compressor A3 Not Started or Pressure Increase not established
P-19	Compressor A4 Not Started or Pressure Increase not established
P-20	Compressor B1 Not Started or Pressure Increase not established
P-21	Compressor B2 Not Started or Pressure Increase not established
P-22	Compressor B3 Not Started or Pressure Increase not established
P-23	Compressor B4 Not Started or Pressure Increase not established
P-24	Compressor C1 Not Started or Pressure Increase not established
P-25	Compressor C2 Not Started or Pressure Increase not established
P-26	Compressor C3 Not Started or Pressure Increase not established
P-27	Compressor C4 Not Started or Pressure Increase not established
P-28	Electrical Box Thermostat or Power Reverse Phase Detection
P-29	Loss of communication with System Manager
P-30	Master/Slave communication Failure
P-31	Unit is in CCN emergency stop
P-32	Water pump #1 default
P-33	Water pump #2 default
P-34	Circuit A Reclaim Operation Failure
P-35	Circuit B Reclaim Operation Failure
P-37	Circuit A — Repeated high discharge gas overrides
P-38	Circuit B — Repeated high discharge gas overrides
P-39	Circuit C — Repeated high discharge gas overrides
P-40	Circuit A — Repeated low suction temp overrides
P-41	Circuit B — Repeated low suction temp overrides
P-42	Circuit C — Repeated low suction temp overrides
P-43	Low entering water temperature in heating
P-97	Water Exchanger Temperature Sensors Swapped

APPENDIX C — CCN ALARM DESCRIPTION (cont)

ALARM CODE	ALARM TEXT DESCRIPTION AND CCN MESSAGE
	Service Failure
Sr-nn	Service maintenance alert Number # nn (see Table 44)
	Compressor Failure
A1-01	Compressor A1 Motor Temperature Too High
A1-02	Compressor A1 Crankcase Heater Failure
A1-03	Compressor A1 High Pressure Switch
A1-04	Compressor A1 Motor Temperature Sensor PTC Out Of Range
A1-05	Compressor A1 Power Reset
A1-06	Compressor A1 Low Control Voltage Alert
A2-01	Compressor A2 Motor Temperature Too High
A2-02	Compressor A2 Crankcase Heater Failure
A2-03	Compressor A2 High Pressure Switch
A2-04	Compressor A2 Motor Temperature Sensor PTC Out Of Range
A2-05	Compressor A2 Power Reset
A2-06	Compressor A2 Low Control Voltage Alert
A3-01	Compressor A3 Motor Temperature Too High
A3-02	Compressor A3 Crankcase Heater Failure
A3-03	Compressor A3 High Pressure Switch
A3-04	Compressor A3 Motor Temperature Sensor PTC Out Of Range
A3-05	Compressor A3 Power Reset
A3-06	Compressor A3 Low Control Voltage Alert
A4-01	Compressor A4 Motor Temperature Too High
A4-02	Compressor A4 Crankcase Heater Failure
A4-03	Compressor A4 High Pressure Switch
A4-04	Compressor A4 Motor Temperature Sensor PTC Out Of Range
A4-05	Compressor A4 Power Reset
A4-06	Compressor A4 Low Control Voltage Alert
B1-01	Compressor B1 Motor Temperature Too High
B1-02	Compressor B1 Crankcase Heater Failure
B1-03	Compressor B1 High Pressure Switch
B1-04	Compressor B1 Motor Temperature Sensor PTC Out Of Range
B1-05	Compressor B1 Power Reset
B1-06	Compressor B1 Low Control Voltage Alert
B2-01	Compressor B2 Motor Temperature Too High
B2-02	Compressor B2 Crankcase Heater Failure
B2-03	Compressor B2 High Pressure Switch
B2-04	Compressor B2 Motor Temperature Sensor PTC Out Of Range
B2-05	Compressor B2 Power Reset
B2-06	Compressor B2 Low Control Voltage Alert
B3-01	Compressor B3 Motor Temperature Too High
B3-02	Compressor B3 Crankcase Heater Failure
B3-03	Compressor B3 High Pressure Switch
B3-04	Compressor B3 Motor Temperature Sensor PTC Out Of Range
B3-05	Compressor B3 Power Reset
B3-06	Compressor B3 Low Control Voltage Alert
B4-01	Compressor B4 Motor Temperature Too High
B4-02	Compressor B4 Crankcase Heater Failure
B4-03	Compressor B4 High Pressure Switch
B4-04	Compressor B4 Motor Temperature Sensor PTC Out Of Range
B4-05	Compressor B4 Power Reset
B4-06	Compressor B4 Low Control Voltage Alert

APPENDIX C — CCN ALARM DESCRIPTION (cont)

ALARM CODE	ALARM TEXT DESCRIPTION AND CCN MESSAGE
	Compressor Failure
C1-01	Compressor C1 Motor Temperature Too High
C1-02	Compressor C1 Crankcase Heater Failure
C1-03	Compressor C1 High Pressure Switch
C1-04	Compressor C1 Motor Temperature Sensor PTC Out Of Range
C1-05	Compressor C1 Power Reset
C1-06	Compressor C1 Low Control Voltage Alert
C2-01	Compressor C2 Motor Temperature Too High
C2-02	Compressor C2 Crankcase Heater Failure
C2-03	Compressor C2 High Pressure Switch
C2-04	Compressor C2 Motor Temperature Sensor PTC Out Of Range
C2-05	Compressor C2 Power Reset
C2-06	Compressor C2 Low Control Voltage Alert
C3-01	Compressor C3 Motor Temperature Too High
C3-02	Compressor C3 Crankcase Heater Failure
C3-03	Compressor C3 High Pressure Switch
C3-04	Compressor C3 Motor Temperature Sensor PTC Out Of Range
C3-05	Compressor C3 Power Reset
C3-06	Compressor C3 Low Control Voltage Alert
C4-01	Compressor C4 Motor Temperature Too High
C4-02	Compressor C4 Crankcase Heater Failure
C4-03	Compressor C4 High Pressure Switch
C4-04	Compressor C4 Motor Temperature Sensor PTC Out Of Range
C4-05	Compressor C4 Power Reset
C4-06	Compressor C4 Low Control Voltage Alert

APPENDIX D — R-410A PRESSURE VS. TEMPERATURE CHART

PSIG	°F	°C	PSIG	°F	°C	PSIG	°F	°C	PSIG	°F	°C	PSIG	°F	°C	PSIG	°F	°C
12	–37.7	–38.7	**114**	37.8	3.2	**216**	74.3	23.5	**318**	100.2	37.9	**420**	120.7	49.3	**522**	137.6	58.7
14	–34.7	–37.1	**116**	38.7	3.7	**218**	74.9	23.8	**320**	100.7	38.2	**422**	121.0	49.4	**524**	137.9	58.8
16	–32.0	–35.6	**118**	39.5	4.2	**220**	75.5	24.2	**322**	101.1	38.4	**424**	121.4	49.7	**526**	138.3	59.1
18	–29.4	–34.1	**120**	40.5	4.7	**222**	76.1	24.5	**324**	101.6	38.7	**426**	121.7	49.8	**528**	138.6	59.2
20	–26.9	–32.7	**122**	41.3	5.2	**224**	76.7	24.8	**326**	102.0	38.9	**428**	122.1	50.1	**530**	138.9	59.4
22	–24.5	–31.4	**124**	42.2	5.7	**226**	77.2	25.1	**328**	102.4	39.1	**430**	122.5	50.3	**532**	139.2	59.6
24	–22.2	–30.1	**126**	43.0	6.1	**228**	77.8	25.4	**330**	102.9	39.4	**432**	122.8	50.4	**534**	139.5	59.7
26	–20.0	–28.9	**128**	43.8	6.6	**230**	78.4	25.8	**332**	103.3	39.6	**434**	123.2	50.7	**536**	139.8	59.9
28	–17.9	–27.7	**130**	44.7	7.1	**232**	78.9	26.1	**334**	103.7	39.8	**436**	123.5	50.8	**538**	140.1	60.1
30	–15.8	–26.6	**132**	45.5	7.5	**234**	79.5	26.4	**336**	104.2	40.1	**438**	123.9	51.1	**540**	140.4	60.2
32	–13.8	–25.4	**134**	46.3	7.9	**236**	80.0	26.7	**338**	104.6	40.3	**440**	124.2	51.2	**544**	141.0	60.6
34	–11.9	–24.4	**136**	47.1	8.4	**238**	80.6	27.0	**340**	105.1	40.6	**442**	124.6	51.4	**548**	141.6	60.9
36	–10.1	–23.4	**138**	47.9	8.8	**240**	81.1	27.3	**342**	105.4	40.8	**444**	124.9	51.6	**552**	142.1	61.2
38	–8.3	–22.4	**140**	48.7	9.3	**242**	81.6	27.6	**344**	105.8	41.0	**446**	125.3	51.8	**556**	142.7	61.5
40	–6.5	–21.4	**142**	49.5	9.7	**244**	82.2	27.9	**346**	106.3	41.3	**448**	125.6	52.0	**560**	143.3	61.8
42	–4.5	–20.3	**144**	50.3	10.2	**246**	82.7	28.2	**348**	106.6	41.4	**450**	126.0	52.2	**564**	143.9	62.2
44	–3.2	–19.6	**146**	51.1	10.6	**248**	83.3	28.5	**350**	107.1	41.7	**452**	126.3	52.4	**568**	144.5	62.5
46	–1.6	–18.7	**148**	51.8	11.0	**250**	83.8	28.8	**352**	107.5	41.9	**454**	126.6	52.6	**572**	145.0	62.8
48	0.0	–17.8	**150**	52.5	11.4	**252**	84.3	29.1	**354**	107.9	42.2	**456**	127.0	52.8	**576**	145.6	63.1
50	1.5	–16.9	**152**	53.3	11.8	**254**	84.8	29.3	**356**	108.3	42.4	**458**	127.3	52.9	**580**	146.2	63.4
52	3.0	–16.1	**154**	54.0	12.2	**256**	85.4	29.7	**358**	108.8	42.7	**460**	127.7	53.2	**584**	146.7	63.7
54	4.5	–15.3	**156**	54.8	12.7	**258**	85.9	29.9	**360**	109.2	42.9	**462**	128.0	53.3	**588**	147.3	64.1
56	5.9	–14.5	**158**	55.5	13.1	**260**	86.4	30.2	**362**	109.6	43.1	**464**	128.3	53.5	**592**	147.9	64.4
58	7.3	–13.7	**160**	56.2	13.4	**262**	86.9	30.5	**364**	110.0	43.3	**466**	128.7	53.7	**596**	148.4	64.7
60	8.6	–13.0	**162**	57.0	13.9	**264**	87.4	30.8	**366**	110.4	43.6	**468**	129.0	53.9	**600**	149.0	65.0
62	10.0	–12.2	**164**	57.7	14.3	**266**	87.9	31.1	**368**	110.8	43.8	**470**	129.3	54.1	**604**	149.5	65.3
64	11.3	–11.5	**166**	58.4	14.7	**268**	88.4	31.3	**370**	111.2	44.0	**472**	129.7	54.3	**608**	150.1	65.6
66	12.6	–10.8	**168**	59.0	15.0	**270**	88.9	31.6	**372**	111.6	44.2	**474**	130.0	54.4	**612**	150.6	65.9
68	13.8	–10.1	**170**	59.8	15.4	**272**	89.4	31.9	**374**	112.0	44.4	**476**	130.3	54.6	**616**	151.2	66.2
70	15.1	–9.4	**172**	60.5	15.8	**274**	89.9	32.2	**376**	112.4	44.7	**478**	130.7	54.8	**620**	151.7	66.5
72	16.3	–8.7	**174**	61.1	16.2	**276**	90.4	32.4	**378**	112.6	44.8	**480**	131.0	55.0	**624**	152.3	66.8
74	17.5	–8.1	**176**	61.8	16.6	**278**	90.9	32.7	**380**	113.1	45.1	**482**	131.3	55.2	**628**	152.8	67.1
76	18.7	–7.4	**178**	62.5	16.9	**280**	91.4	33.0	**382**	113.5	45.3	**484**	131.6	55.3	**632**	153.4	67.4
78	19.8	–6.8	**180**	63.1	17.3	**282**	91.9	33.3	**384**	113.9	45.5	**486**	132.0	55.6	**636**	153.9	67.7
80	21.0	–6.1	**182**	63.8	17.7	**284**	92.4	33.6	**386**	114.3	45.7	**488**	132.3	55.7	**640**	154.5	68.1
82	22.1	–5.5	**184**	64.5	18.1	**286**	92.8	33.8	**388**	114.7	45.9	**490**	132.6	55.9	**644**	155.0	68.3
84	23.2	–4.9	**186**	65.1	18.4	**288**	93.3	34.1	**390**	115.0	46.1	**492**	132.9	56.1	**648**	155.5	68.6
86	24.3	–4.3	**188**	65.8	18.8	**290**	93.8	34.3	**392**	115.5	46.4	**494**	133.3	56.3	**652**	156.1	68.9
88	25.4	–3.7	**190**	66.4	19.1	**292**	94.3	34.6	**394**	115.8	46.6	**496**	133.6	56.4	**656**	156.6	69.2
90	26.4	–3.1	**192**	67.0	19.4	**294**	94.8	34.9	**396**	116.2	46.8	**498**	133.9	56.6	**660**	157.1	69.5
92	27.4	–2.6	**194**	67.7	19.8	**296**	95.2	35.1	**398**	116.6	47.0	**500**	134.0	56.7	**664**	157.7	69.8
94	28.5	–1.9	**196**	68.3	20.2	**298**	95.7	35.4	**400**	117.0	47.2	**502**	134.5	56.9	**668**	158.2	70.1
96	29.5	–1.4	**198**	68.9	20.5	**300**	96.2	35.7	**402**	117.3	47.4	**504**	134.8	57.1	**672**	158.7	70.4
98	30.5	–0.8	**200**	69.5	20.8	**302**	96.6	35.9	**404**	117.7	47.6	**506**	135.2	57.3	**676**	159.2	70.7
100	31.2	–0.4	**202**	70.1	21.2	**304**	97.1	36.2	**406**	118.1	47.8	**508**	135.5	57.5	**680**	159.8	71.0
102	32.2	0.1	**204**	70.7	21.5	**306**	97.5	36.4	**408**	118.5	48.1	**510**	135.8	57.7	**684**	160.3	71.3
104	33.2	0.7	**206**	71.4	21.9	**308**	98.0	36.7	**410**	118.8	48.2	**512**	136.1	57.8	**688**	160.8	71.6
106	34.1	1.2	**208**	72.0	22.2	**310**	98.4	36.9	**412**	119.2	48.4	**514**	136.4	58.0	**692**	161.3	71.8
108	35.1	1.7	**210**	72.6	22.6	**312**	98.9	37.2	**414**	119.6	48.7	**516**	136.7	58.2	**696**	161.8	72.1
110	35.5	1.9	**212**	73.2	22.9	**314**	99.3	37.4	**416**	119.9	48.8	**518**	137.0	58.3			
112	36.9	2.7	**214**	73.8	23.2	**316**	99.7	37.6	**418**	120.3	49.1	**520**	137.3	58.5			

APPENDIX E — MAINTENANCE SUMMARY AND LOG SHEETS

30RB Maintenance Interval Requirements

WEEKLY	
Compressor	Check Oil Level.
Condenser	Check condenser coils for debris, clean as necessary.
	Periodic clean water rinse, especially in coastal and industrial applications.
Controls	Review Alarm/Alert History.
MONTHLY	
Cooler	Inspect water pumps.
Controls	Check accuracy of thermistors, replace if greater than ±2° F (1.2° C) variance from calibrated thermometer.
	Check accuracy of transducers, replace if greater than ±5 psi (34.47 kPa) variance.
Refrigerant System	Check refrigerant charge level.
	Check moisture indicating sight glass for possible refrigerant loss and presence of moisture.
	Perform leak test.
QUARTERLY	
Compressor	Check crankcase heater operation.
Controls	Check chilled water flow switch operation.
Condenser	Check all condenser fans for proper operation.
Refrigerant System	Check all refrigerant joints and valves for refrigerant leaks, repair as necessary.
Hydronic System	Inspect pump seal, if equipped with a hydronic pump package.
	Lubricate pump motor as required.
Starter	Inspect all contactors.
ANNUALLY	
Cooler	Check to be sure that the proper concentration of antifreeze is present in the chilled water loop, if applicable.
	Verify that the chilled water loop is properly treated.
	Check chilled water strainers, clean as necessary.
	Check cooler heater operation, if equipped.
Condenser	Check condition of condenser fan blades and that they are securely fastened to the motor shaft.
Controls	Perform Service Test to confirm operation of all components.
	Check all electrical connections, tighten as necessary.
	Inspect all contactors and relays, replace as necessary.
Refrigerant System	Check refrigerant filter driers for excessive pressure drop, replace as necessary.
Hydronic System	Check pump heater operation if equipped.

NOTE: Equipment failures caused by lack of adherence to the Maintenance Interval Requirements are not covered under warranty.

APPENDIX E — MAINTENANCE SUMMARY AND LOG SHEETS

30RB Weekly Maintenance Log

Plant _____

Machine Model No. _____

DATE	OIL LEVEL	CHECK CONDENSER COIL	CHECK ALARMS / FAULTS	OPERATOR INITIALS	REMARKS

NOTE: Equipment failures caused by lack of adherence to the Maintenance Interval Requirements are not covered under warranty.

APPENDIX E — MAINTENANCE SUMMARY AND LOG SHEETS

30RB Maintenance Log for Monthly, Quarterly, and Annual Checks

Month			1	2	3	4	5	6	7	8	9	10	11	12
Date			/ /	/ /	/ /	/ /	/ /	/ /	/ /	/ /	/ /	/ /	/ /	/ /
Operator														

UNIT SECTION	ACTION	UNIT	ENTRY											
Compressor	Check Oil Level	yes/no												
	Check Crankcase Heater Operation	yes/no												
	Send Oil Sample Out for Analysis	yes/no												
Cooler	Check Cooler Heater Operation	yes/no												
	Check Chiller Water Loop	yes/no												
	Check Chilled Water Strainers	yes/no												
	Record Water Pressure Differential (PSI)	PSI												
	Inspect Water Pumps	yes/no												
Condenser	Inspect and Clean All Coils	yes/no												
	Check all Condesnoer Fans for Proper Operation	yes/no												
	Check Condition of Consenser Fan Blades	yes/no												
Controls	General Cleaning and Tightening Connections	yes/no												
	Check Chilled Water Flow Switch Operation	yes/no												
	Perform Service Test	yes/no												
	Confirm Accuracy of Pressure Transducers	yes/no												
	Confirm Accuracy of Thermistors	yes/no												
Starter	General Tightening & Cleaning Connections	yes/no												
	Inspect All Contactors	yes/no												
System	Check Refrigerant Charge Level	yes/no												
	Verify Operation of EXVs and Record Position	0-100%												
	Record System Super Heat	deg. F												
	Check Moisture Sight Glass	yes/no												
	Perform Leak Test	yes/no												
	Check all Refrigerant Joints and Valves for Refrigerant Leaks	yes/no												
	Check Filter Driers	yes/no												

Annually

NOTE: Equipment failures caused by lack of adherence to the Maintenance Interval Requirements are not covered under warranty.

APPENDIX E — MAINTENANCE SUMMARY AND LOG SHEETS

30RB Seasonal Shutdown Log

Month		1	2	3	4	5	6	7	8	9	10	11	12
Date		/ /	/ /	/ /	/ /	/ /	/ /	/ /	/ /	/ /	/ /	/ /	/ /
Operator													

UNIT SECTION	ACTION	ENTRY											
Cooler	Isolate and Drain Cooler												
Controls	Do Not Disconnect Control Power Unless Cooler is Completely Drained												

NOTES:
1. Equipment failures caused by lack of adherence to the Maintenance Interval Requirements are not covered under warranty.
2. Refer to Installation Instructions for proper Winterization procedure.

Optional BACnet* Communications Wiring —

The following section is used to configure the UPC Open controller which is used when the BACnet communications option is selected. The UPC Open controller is mounted in a separate enclosure below the main control box.

TO ADDRESS THE UPC OPEN CONTROLLER — The user must give the UPC Open controller an address that is unique on the BACnet network. Perform the following procedure to assign an address:

1. If the UPC Open controller is powered, pull the screw terminal connector from the controller's power terminals labeled Gnd and HOT. The controller reads the address each time power is applied to it.
2. Using the rotary switches (see Fig. A and B), set the controller's address. Set the Tens (10's) switch to the tens digit of the address, and set the Ones (1's) switch to the ones digit.

As an example in Fig. B, if the controller's address is 25, point the arrow on the Tens (10's) switch to 2 and the arrow on the Ones (1's) switch to 5.

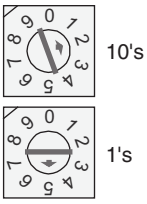

Fig. B — Address Rotary Switches

BACNET DEVICE INSTANCE ADDRESS — The UPC Open controller also has a BACnet Device Instance address. This Device Instance MUST be unique for the complete BACnet system in which the UPC Open controller is installed. The Device Instance is auto generated by default and is derived by adding the MAC address to the end of the Network Number. The Network Number of a new UPC Open controller is 16101, but it can be changed using i-Vu® Tools or BACView device. By default, a MAC address of 20 will result in a Device Instance of 16101 + 20 which would be a Device Instance of 1610120.

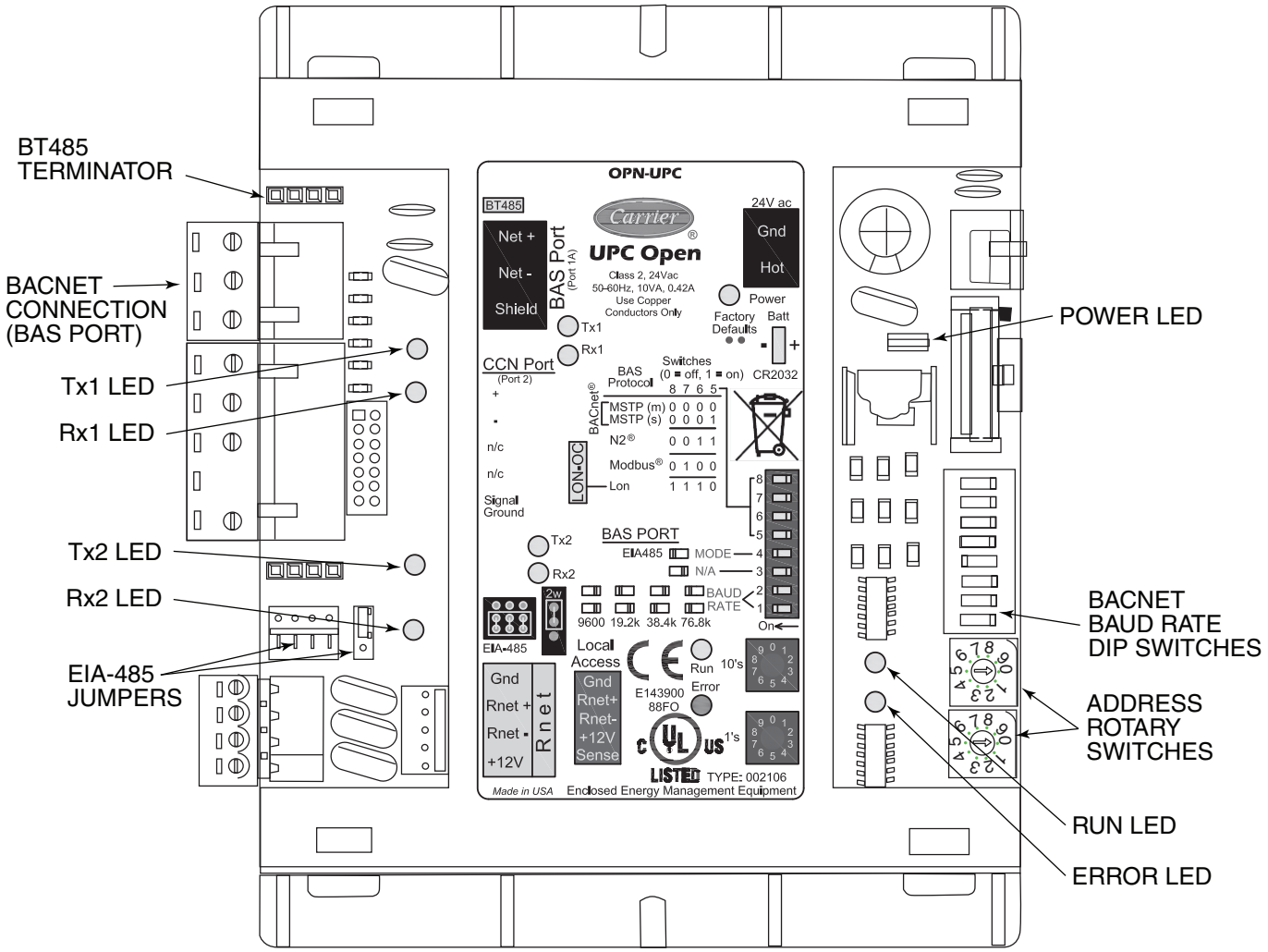

Fig. A — UPC Open Controller

* Sponsored by ASHRAE (American Society of heating, Refrigerating and Air Conditioning Engineers).

CONFIGURING THE BAS PORT FOR BACNET MS/TP — Use the same baud rate and communication settings for all controllers on the network segment. The UPC Open controller is fixed at 8 data bits, No Parity, and 1 Stop bit for this protocol's communications.

If the UPC Open controller has been wired for power, pull the screw terminal connector from the controller's power terminals labeled Gnd and HOT. The controller reads the DIP Switches and jumpers each time power is applied to it.

Set the BAS Port DIP switch DS3 to "enable." Set the BAS Port DIP switch DS4 to "E1-485." Set the BMS Protocol DIP switches DS8 through DS5 to "MSTP." See Table A.

Table A — SW3 Protocol Switch Settings for MS/TP

DS8	DS7	DS6	DS5	DS4	DS3
Off	Off	Off	Off	On	Off

Verify that the EIA-485 jumpers below the CCN Port are set to EIA-485 and 2W.

The example in Fig. C shows the BAS Port DIP Switches set for 76.8k (Carrier default) and MS/TP.

Set the BAS Port DIP Switches DS2 and DS1 for the appropriate communications speed of the MS/TP network (9600, 19.2k, 38.4k, or 76.8k bps). See Fig. D and Table B.

Table B — Baud Selection Table

BAUD RATE	DS2	DS1
9,600	Off	Off
19,200	On	Off
38,400	Off	On
76,800	On	On

WIRING THE UPC OPEN CONTROLLER TO THE MS/TP NETWORK — The UPC Open controller communicates using BACnet on an MS/TP network segment communications at 9600 bps, 19.2 kbps, 38.4 kbps, or 76.8 kbps.

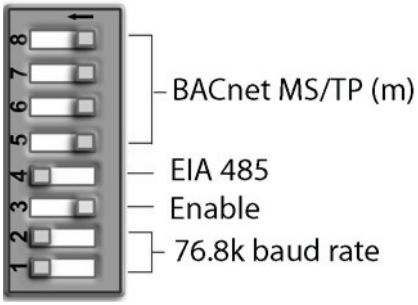

Fig. C — DIP Switches

Wire the controllers on an MS/TP network segment in a daisy-chain configuration. Wire specifications for the cable are 22 AWG (American Wire Gage) or 24 AWG, low-capacitance, twisted, stranded, shielded copper wire. The maximum length is 2000 ft.

Install a BT485 terminator on the first and last controller on a network segment to add bias and prevent signal distortions due to echoing. See Fig. A, D, and E.

To wire the UPC Open controller to the BAS network:

1. Pull the screw terminal connector from the controller's BAS Port.
2. Check the communications wiring for shorts and grounds.
3. Connect the communications wiring to the BAS port's screw terminals labeled Net +, Net -, and Shield.

NOTE: Use the same polarity throughout the network segment.

4. Insert the power screw terminal connector into the UPC Open controller's power terminals if they are not currently connected.
5. Verify communication with the network by viewing a module status report. To perform a module status report using the BACview keypad/display unit, press and hold the "FN" key then press the "." Key.

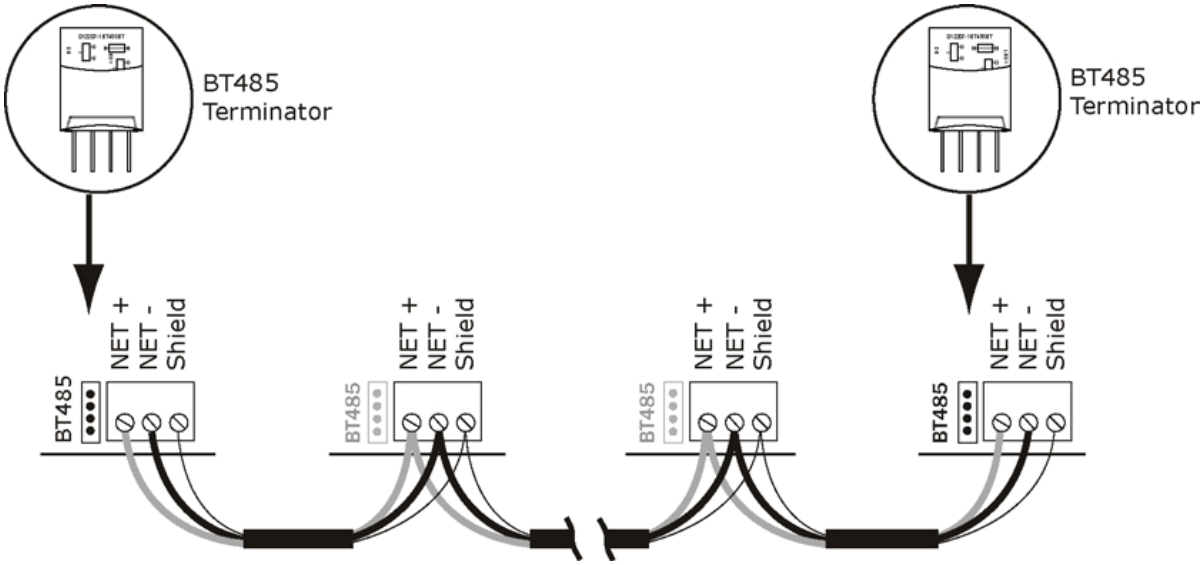

Fig. D — Network Wiring

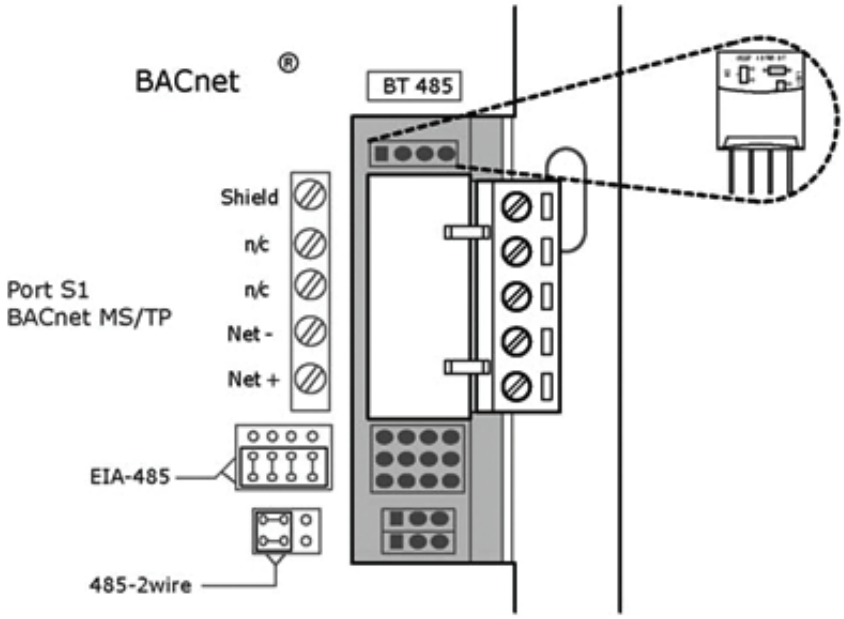

Fig. E — BT485 Terminator Installation

To install a BT485 terminator, push the BT485 terminator on to the BT485 connector located near the BACnet connector.

NOTE: The BT485 terminator has no polarity associated with it.

To order a BT485 terminator, consult Commercial Products i-Vu Open Control System Master Prices.

MS/TP WIRING RECOMMENDATIONS — Recommendations are shown in Tables C and D. The wire jacket and UL temperature rating specifications list two acceptable alternatives. The Halar specification has a higher temperature rating and a tougher outer jacket than the SmokeGard specification, and it is appropriate for use in applications where the user is concerned about abrasion. The Halar jacket is also less likely to crack in extremely low temperatures.

NOTE: Use the specified type of wire and cable for maximum signal integrity.

Table C — MS/TP Wiring Recommendations

SPECIFICATION	RECOMMMENDATION
Cable	Single twisted pair, low capacitance, CL2P, 22 AWG (7x30), TC foam FEP, plenum rated cable
Conductor	22 or 24 AWG stranded copper (tin plated)
Insulation	Foamed FEP 0.015 in. (0.381 mm) wall 0.060 in. (1.524 mm) O.D.
Color Code	Black/White
Twist Lay	2 in. (50.8 mm) lay on pair 6 twists/foot (20 twists/meter) nominal
Shielding	Aluminum/Mylar shield with 24 AWG TC drain wire
Jacket	SmokeGard Jacket (SmokeGard PVC) 0.021 in. (0.5334 mm) wall 0.175 in. (4.445 mm) O.D. Halar Jacket (E-CTFE) 0.010 in. (0.254 mm) wall 0.144 in. (3.6576 mm) O.D.
DC Resistance	15.2 Ohms/1000 feet (50 Ohms/km) nominal
Capacitance	12.5 pF/ft (41 pF/meter) nominal conductor to conductor
Characteristic Impedance	100 Ohms nominal
Weight	12 lb/1000 feet (17.9 kg/km)
UL Temperature Rating	SmokeGard 167°F (75°C) Halar -40 to 302°F (-40 to 150°C)
Voltage	300 Vac, power limited
Listing	UL: NEC CL2P, or better

LEGEND

AWG — American Wire Gage
CL2P — Class 2 Plenum Cable
DC — Direct Current
FEP — Fluorinated Ethylene Polymer
NEC — National Electrical Code
O.D. — Outside Diameter
TC — Tinned Copper
UL — Underwriters Laboratories

Table D — Open System Wiring Specifications and Recommended Vendors

WIRING SPECIFICATIONS		RECOMMENDED VENDORS AND PART NUMBERS			
Wire Type	**Description**	**Connect Air International**	**Belden**	**RMCORP**	**Contractors Wire and Cable**
MS/TP Network (RS-485)	22 AWG, single twisted shielded pair, low capacitance, CL2P, TC foam FEP, plenum rated. See MS/TP Installation Guide for specifications.	W221P-22227	—	25160PV	CLP0520LC
	24 AWG, single twisted shielded pair, low capacitance, CL2P, TC foam FEP, plenum rated. See MS/TP Installation Guide for specifications.	W241P-2000F	82841	25120-OR	—
Rnet	4 conductor, unshielded, CMP, 18 AWG, plenum rated.	W184C-2099BLB	6302UE	21450	CLP0442

LEGEND

AWG — American Wire Gage
CL2P — Class 2 Plenum Cable
CMP — Communications Plenum Rated
FEP — Fluorinated Ethylene Polymer
TC — Tinned Copper

LOCAL ACCESS TO THE UPC OPEN CONTROLLER — The user can use a BACview[6] handheld keypad display unit or the Virtual BACview software as a local user interface to an Open controller. These items let the user access the controller network information. These are accessory items and do not come with the UPC Open controller.

The BACview[6] unit connects to the local access port on the UPC Open controller. See Fig. F. The BACview software must be running on a laptop computer that is connected to the local access port on the UPC Open controller. The laptop will require an additional USB link cable for connection.

See the *BACview Installation and User Guide* for instructions on connecting and using the BACview[6] device.

To order a BACview[6] Handheld (BV6H), consult Commercial Products i-Vu Open Control System Master Prices.

CONFIGURING THE UPC OPEN CONTROLLER'S PROPERTIES — The UPC Open device and *Comfort*Link control must be set to the same CCN Address (Element) number and CCN Bus number. The factory default settings for CCN Element and CCN Bus number are 1 and 0 respectively.

If modifications to the default Element and Bus number are required, both the *Comfort*Link and UPC Open configurations must be changed.

The following configurations are used to set the CCN Address and Bus number in the *Comfort*Link control. These configurations can be changed using the scrolling marquee display or accessory Navigator handheld device.

Configuration→CCN→CCN.A (CCN Address)

Configuration→CCN→CCN.B (CCN Bus Number)

The following configurations are used to set the CCN Address and Bus Number in the UPC Open controller. These configurations can be changed using the accessory BACview[6] display.

Navigation: BACview→CCN
Home: Element Comm Stat
Element: 1
Bus: 0

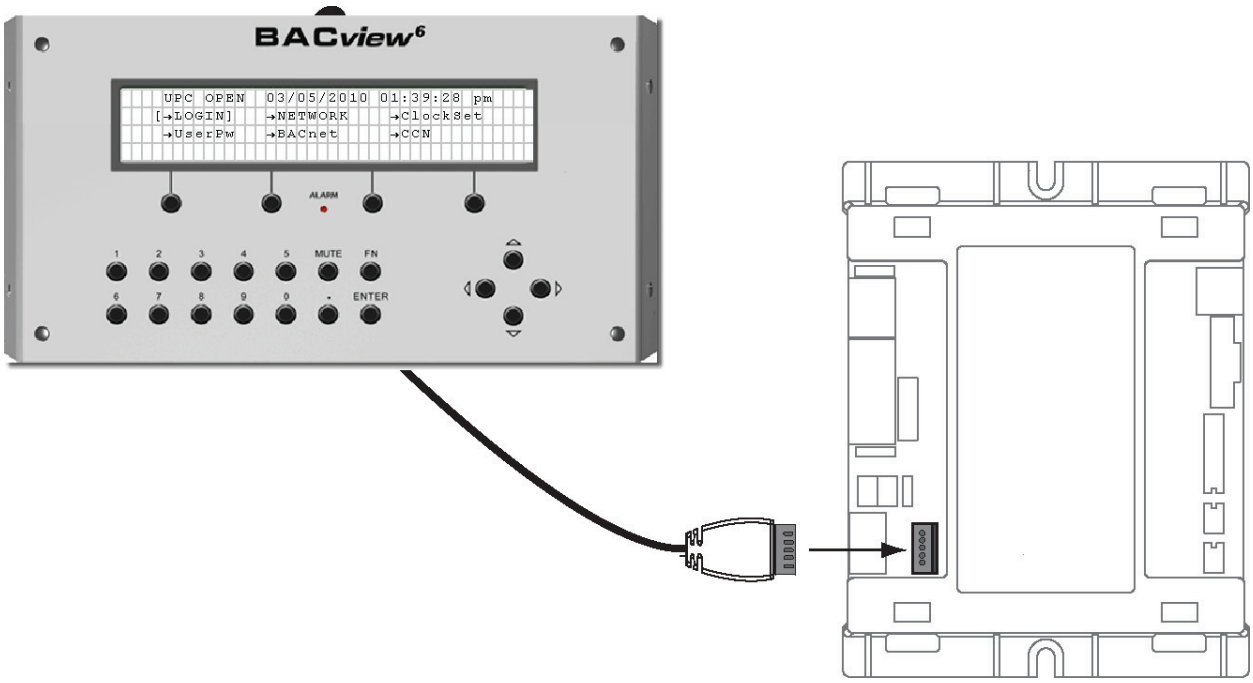

Fig. F — BACview[6] Device Connection

If the UPC Open is used with the chiller application of Lead/Lag/Standby, all chillers and UPC Open's CCN element numbers must be changed to a unique number in order to follow CCN specifications. In this application, there can only be a maximum of 3 UPC Open controllers on a CCN bus.

For the CCN Alarm Acknowledger configuration, the UPC Open defaults to CCN Acknowledger. If a Chiller Lead/Lag/Standby application is being used, then the Carrier technician must change the configuration to only one CCN Acknowledger on the CCN bus.

For the CCN Time Broadcaster configuration, the UPC Open defaults to CCN Time Broadcaster. If the Chiller Lead/Lag/Standby application is used, then the Carrier technician must change the configuration to only one CCN Time Broadcaster on the CCN bus.

TROUBLESHOOTING — If there are problems wiring or addressing the UPC Open controller, contact Carrier Technical Support.

COMMUNICATION LEDS — The LEDs indicate if the controller is communicating with the devices on the network. See Tables E and F. The LEDs should reflect communication traffic based on the baud rate set. The higher the baud rate the more solid the LEDs become. See Fig. A for location of LEDs on UPC Open module.

REPLACING THE UPC OPEN BATTERY — The UPC Open controller's 10-year lithium CR2032 battery provides a minimum of 10,000 hours of data retention during power outages.

IMPORTANT: Power must be **ON** to the UPC Open when replacing the battery, or the date, time, and trend data will be lost.

Remove the battery from the controller, making note of the battery's polarity. Insert the new battery, matching the battery's polarity with the polarity indicated on the UPC Open controller.

NETWORK POINTS LIST — The points list for the controller is shown in Table G.

Table E — LED Status Indicators

LED	STATUS
Power	Lights when power is being supplied to the controller. The UPC Open controller is protected by internal solid-state polyswitches on the incoming power and network connections. These polyswitches are not replaceable and will reset themselves if the condition that caused the fault returns to normal.
Rx	Lights when the controller receives data from the network segment; there is an Rx LED for Ports 1 and 2.
Tx	Lights when the controller transmits data to the network segment; there is an Rx LED for Ports 1 and 2.
Run	Lights based on controller status. See Table F.
Error	Lights based on controller status. See Table F.

Table F — Run and Error LEDs Controller and Network Status Indication

RUN LED	ERROR LED	STATUS
2 flashes per second	Off	Normal
2 flashes per second	2 flashes, alternating with **Run** LED	Five minute auto-restart delay after system error
2 flashes per second	3 flashes, then off	Controller has just been formatted
2 flashes per second	1 flash per second	Controller is alone on the network
2 flashes per second	On	Exec halted after frequent system errors or control programs halted
5 flashes per second	On	Exec start-up aborted, Boot is running
5 flashes per second	Off	Firmware transfer in progress, Boot is running
7 flashes per second	7 flashes per second, alternating with **Run** LED	Ten second recovery period after brownout
14 flashes per second	14 flashes per second, alternating with **Run** LED	Brownout

Table G — Network Points List

POINT DESCRIPTION	POINT NAME	READ/ WRITE	UNITS	DEFAULT VALUE	RANGE	BACNET OBJECT ID	BACNET OBJECT NAME
Active Demand Limit Val	DEM_LIM	R	%	N/A	0-100	AV:1	dem_lim_1
Air Cond Entering Valv A	hr_ea_a	R	N/A	N/A	On/Off	BV:4	hr_ea_a_1
Air Cond Entering Valv B	hr_ea_b	R	N/A	N/A	On/Off	BV:5	hr_ea_b_1
Air Cond Leaving Valve A	hr_la_a	R	N/A	N/A	On/Off	BV:6	hr_la_a_1
Air Cond Leaving Valve B	hr_la_b	R	N/A	N/A	On/Off	BV:7	hr_la_b_1
Alarm Relay Status	ALARMOUT	R	N/A	N/A	On/Off	BV:8	alarmout_1
Alarm State	ALM	R	N/A	N/A	0=Normal, 1=Partial, 2=Shutdown	AV:2	alm_1
Alert Relay Status	ALERT	R	N/A	N/A	On/Off	BV:9	alert_1
Auto Changeover Active	Mode_12	R	N/A	N/A	Yes/No	BV:10	mode_12_1
Boiler Active	Mode_17	R	N/A	N/A	Yes/No	BV:11	mode_17_1
Boiler Command	BOILER	R	N/A	N/A	On/Off	BV:12	boiler_1
CCN Chiller Start/Stop	CHIL_S_S	R/W	N/A	N/A	Enable/Disable	BV:1500	chil_s_s_1
Chiller Capacity Signal	CAPT_010	R	volts	N/A	±nn.n	AV:3	capt_010_1
Chiller Occupied?	CHIL_OCC	R	N/A	N/A	Yes/No	BV:1501	chil_occ_1
CHWS Temperature - Prime Variable	CHWSTEMP	R	°F	N/A	±nnn.n	AV:1612	chwstemp_1
Cir A Compressor 1 Heater Out	cp_a1_ht	R	N/A	N/A	On/Off	BV:13	cp_a1_ht_1
Cir A Compressor 1 Output	CP_A1	R	N/A	N/A	On/Off	BV:14	cp_a1_1
Cir A Compressor 2 Heater Out	cp_a2_ht	R	N/A	N/A	On/Off	BV:15	cp_a2_ht_1
Cir A Compressor 2 Output	CP_A2	R	N/A	N/A	On/Off	BV:16	cp_a2_1
Cir A Compressor 3 Heater Out	cp_a3_ht	R	N/A	N/A	On/Off	BV:17	cp_a3_ht_1
Cir A Compressor 3 Output	CP_A3	R	N/A	N/A	On/Off	BV:18	cp_a3_1
Cir A Compressor 4 Heater Out	cp_a4_ht	R	N/A	N/A	On/Off	BV:19	cp_a4_ht_1
Cir A Compressor 4 Output	CP_A4	R	N/A	N/A	On/Off	BV:20	cp_a4_1
Cir A Crank Heater Current Cp1	cpa1_cur	R	amps	N/A	nnn.n	AV:4	cpa1_cur_1
Cir A Crank Heater Current Cp2	cpa2_cur	R	amps	N/A	nnn.n	AV:5	cpa2_cur_1
Cir A Crank Heater Current Cp3	cpa3_cur	R	amps	N/A	nnn.n	AV:6	cpa3_cur_1
Cir A Crank Heater Current Cp4	cpa4_cur	R	amps	N/A	nnn.n	AV:7	cpa4_cur_1
Cir A Discharge Pressure	DP_A	R	psi	N/A	nnn.n	AV:1601	dp_a_1
Cir A EXV Position	EXV_A	R	%	N/A	0-100	AV:8	exv_a_1
Cir A Fan Output DO # 1	fan_a1	R	N/A	N/A	On/Off	BV:21	fan_a1_1
Cir A Fan Output DO # 2	fan_a2	R	N/A	N/A	On/Off	BV:22	fan_a2_1
Cir A Fan Output DO # 3	fan_a3	R	N/A	N/A	On/Off	BV:23	fan_a3_1
Cir A Fan Output DO # 4	fan_a4	R	N/A	N/A	On/Off	BV:24	fan_a4_1
Cir A Fan Output DO # 5	fan_a5	R	N/A	N/A	On/Off	BV:25	fan_a5_1
Cir A Fan Output DO # 6	fan_a6	R	N/A	N/A	On/Off	BV:26	fan_a6_1
Cir A Fan Staging Number	FAN_ST_A	R	N/A	N/A	0-6	AV:9	fan_st_a_1
Cir A Head Press Actuator Pos	hd_pos_a	R	%	N/A	0-100	AV:10	hd_pos_a_1
Cir A Hot Gas Bypass Output	HGBP_V_A	R	N/A	N/A	On/Off	BV:27	hgbp_v_a_1
Cir A Motor Thermistor Comp 1	cpa1_tmp	R	ohms	N/A	nnnn	AV:11	cpa1_tmp_1
Cir A Motor Thermistor Comp 2	cpa2_tmp	R	ohms	N/A	nnnn	AV:12	cpa2_tmp_1
Cir A Motor Thermistor Comp 3	cpa3_tmp	R	ohms	N/A	nnnn	AV:13	cpa3_tmp_1
Cir A Motor Thermistor Comp 4	cpa4_tmp	R	ohms	N/A	nnnn	AV:14	cpa4_tmp_1
Cir A Percent Total Capacity	CAPA_T	R	%	N/A	0-100	AV:15	capa_t_1
Cir A Saturated Condensing Tmp	SCT_A	R	°F	N/A	±nnn.n	AV:1602	sct_a_1
Cir A Saturated Suction Temp	SST_A	R	°F	N/A	±nnn.n	AV:1603	sst_a_1
Cir A Suction Gas Temperature	SUCT_T_A	R	°F	N/A	±nnn.n	AV:16	suct_t_a_1
Cir A Suction Pressure	SP_A	R	psi	N/A	±nnn.n	AV:1600	sp_a_1
Cir A Suction Superheat Temp	SH_A	R	^F	N/A	±nnn.n	AV:17	sh_a_1
Cir B Compressor 1 Heater Out	cp_b1_ht	R	N/A	N/A	On/Off	BV:28	cp_b1_ht_1
Cir B Compressor 1 Output	CP_B1	R	N/A	N/A	On/Off	BV:29	cp_b1_1
Cir B Compressor 2 Heater Out	cp_b2_ht	R	N/A	N/A	On/Off	BV:30	cp_b2_ht_1
Cir B Compressor 2 Output	CP_B2	R	N/A	N/A	On/Off	BV:31	cp_b2_1
Cir B Compressor 3 Heater Out	cp_b3_ht	R	N/A	N/A	On/Off	BV:32	cp_b3_ht_1
Cir B Compressor 3 Output	CP_B3	R	N/A	N/A	On/Off	BV:33	cp_b3_1

LEGEND

CCN — Carrier Comfort Network
CHWS — Chilled Water Setpoint
DGT — Discharge Gas Temperature
DO — Discrete Output
EWT — Entering Water Temperature
EXV — Electronic Expansion Valve
OAT — Outdoor Air Temperature
R — Read
W — Write

Table G — Network Points List (cont)

POINT DESCRIPTION	POINT NAME	READ/ WRITE	UNITS	DEFAULT VALUE	RANGE	BACNET OBJECT ID	BACNET OBJECT NAME
Cir B Compressor 4 Heater Out	cp_b4_ht	R	N/A	N/A	On/Off	BV:34	cp_b4_ht_1
Cir B Compressor 4 Output	CP_B4	R	N/A	N/A	On/Off	BV:35	cp_b4_1
Cir B Crank Heater Current Cp1	cpb1_cur	R	amps	N/A	nnn.n	AV:18	cpb1_cur_1
Cir B Crank Heater Current Cp2	cpb2_cur	R	amps	N/A	nnn.n	AV:19	cpb2_cur_1
Cir B Crank Heater Current Cp3	cpb3_cur	R	amps	N/A	nnn.n	AV:20	cpb3_cur_1
Cir B Crank Heater Current Cp4	cpb4_cur	R	amps	N/A	nnn.n	AV:21	cpb4_cur_1
Cir B Discharge Pressure	DP_B	R	psi	N/A	nnn.n	AV:1605	dp_b_1
Cir B EXV Position	EXV_B	R	%	N/A	0-100	AV:22	exv_b_1
Cir B Fan Output DO # 1	fan_b1	R	N/A	N/A	On/Off	BV:36	fan_b1_1
Cir B Fan Output DO # 2	fan_b2	R	N/A	N/A	On/Off	BV:37	fan_b2_1
Cir B Fan Output DO # 3	fan_b3	R	N/A	N/A	On/Off	BV:38	fan_b3_1
Cir B Fan Output DO # 4	fan_b4	R	N/A	N/A	On/Off	BV:39	fan_b4_1
Cir B Fan Output DO # 5	fan_b5	R	N/A	N/A	On/Off	BV:40	fan_b5_1
Cir B Fan Output DO # 6	fan_b6	R	N/A	N/A	On/Off	BV:41	fan_b6_1
Cir B Fan Staging Number	FAN_ST_B	R	N/A	N/A	0-6	AV:23	fan_st_b_1
Cir B Head Press Actuator Pos	hd_pos_b	R	%	N/A	0-100	AV:24	hd_pos_b_1
Cir B Hot Gas Bypass Output	HGBP_V_B	R	N/A	N/A	On/Off	BV:42	hgbp_v_b_1
Cir B Motor Thermistor Comp 1	cpb1_tmp	R	ohms	N/A	nnnn	AV:25	cpb1_tmp_1
Cir B Motor Thermistor Comp 2	cpb2_tmp	R	ohms	N/A	nnnn	AV:26	cpb2_tmp_1
Cir B Motor Thermistor Comp 3	cpb3_tmp	R	ohms	N/A	nnnn	AV:27	cpb3_tmp_1
Cir B Motor Thermistor Comp 4	cpb4_tmp	R	ohms	N/A	nnnn	AV:28	cpb4_tmp_1
Cir B Percent Total Capacity	CAPB_T	R	%	N/A	0-100	AV:29	capb_t_1
Cir B Saturated Condensing Tmp	SCT_B	R	°F	N/A	±nnn.n	AV:30	sct_b_1
Cir B Saturated Suction Temp	SST_B	R	°F	N/A	±nnn.n	AV:31	sst_b_1
Cir B Suction Gas Temperature	UCT_T_B	R	°F	N/A	±nnn.n	AV:32	suct_t_b_1
Cir B Suction Pressure	SP_B	R	psi	N/A	nnn.n	AV:33	sp_b_1
Cir B Suction Superheat Temp	SH_B	R	psi	N/A	nnn.n	AV:34	sh_b_1
Cir C Compressor 1 Heater Out	cp_c1_ht	R	N/A	N/A	On/Off	BV:43	cp_c1_ht_1
Cir C Compressor 1 Output	CP_C1	R	N/A	N/A	On/Off	BV:44	cp_c1_1
Cir C Compressor 2 Heater Out	cp_c2_ht	R	N/A	N/A	On/Off	BV:45	cp_c2_ht_1
Cir C Compressor 2 Output	CP_C2	R	N/A	N/A	On/Off	BV:46	cp_c2_1
Cir C Compressor 3 Heater Out	cp_c3_ht	R	N/A	N/A	On/Off	BV:47	cp_c3_ht_1
Cir C Compressor 3 Output	CP_C3	R	N/A	N/A	On/Off	BV:48	cp_c3_1
Cir C Compressor 4 Heater Out	cp_c4_ht	R	N/A	N/A	On/Off	BV:49	cp_c4_ht_1
Cir C Compressor 4 Output	CP_C4	R	N/A	N/A	On/Off	BV:50	cp_c4_1
Cir C Crank Heater Current Cp1	cpc1_cur	R	amps	N/A	nnn.n	AV:35	cpc1_cur_1
Cir C Crank Heater Current Cp2	cpc2_cur	R	amps	N/A	nnn.n	AV:36	cpc2_cur_1
Cir C Crank Heater Current Cp3	cpc3_cur	R	amps	N/A	nnn.n	AV:37	cpc3_cur_1
Cir C Crank Heater Current Cp4	cpc4_cur	R	amps	N/A	nnn.n	AV:38	cpc4_cur_1
Cir C Discharge Pressure	DP_C	R	psi	N/A	nnn.n	AV:1609	dp_c_1
Cir C EXV Position	EXV_C	R	%	N/A	0-100	AV:39	exv_c_1
Cir C Fan Output DO # 1	fan_c1	R	N/A	N/A	On/Off	BV:51	fan_c1_1
Cir C Fan Output DO # 2	fan_c2	R	N/A	N/A	On/Off	BV:52	fan_c2_1
Cir C Fan Output DO # 3	fan_c3	R	N/A	N/A	On/Off	BV:53	fan_c3_1
Cir C Fan Output DO # 4	fan_c4	R	N/A	N/A	On/Off	BV:54	fan_c4_1
Cir C Fan Output DO # 5	fan_c5	R	N/A	N/A	On/Off	BV:55	fan_c5_1
Cir C Fan Output DO # 6	fan_c6	R	N/A	N/A	On/Off	BV:56	fan_c6_1
Cir C Fan Staging Number	FAN_ST_C	R	N/A	N/A	0-6	AV:40	fan_st_c_1
Cir C Head Press Actuator Pos	hd_pos_c	R	%	N/A	0-100	AV:41	hd_pos_c_1
Cir C Hot Gas Bypass Output	HGBP_V_C	R	N/A	N/A	On/Off	BV:57	hgbp_v_c_1
Cir C Motor Thermistor Comp 1	cpc1_tmp	R	ohms	N/A	nnnn	AV:42	cpc1_tmp_1
Cir C Motor Thermistor Comp 2	cpc2_tmp	R	ohms	N/A	nnnn	AV:43	cpc2_tmp_1
Cir C Motor Thermistor Comp 3	cpc3_tmp	R	ohms	N/A	nnnn	AV:44	cpc3_tmp_1
Cir C Motor Thermistor Comp 4	cpc4_tmp	R	ohms	N/A	nnnn	AV:45	cpc4_tmp_1

LEGEND

CCN — Carrier Comfort Network
CHWS — Chilled Water Setpoint
DGT — Discharge Gas Temperature
DO — Discrete Output
EWT — Entering Water Temperature
EXV — Electronic Expansion Valve
OAT — Outdoor Air Temperature
R — Read
W — Write

Table G — Network Points List (cont)

POINT DESCRIPTION	POINT NAME	READ/ WRITE	UNITS	DEFAULT VALUE	RANGE	BACNET OBJECT ID	BACNET OBJECT NAME
Cir C Percent Total Capacity	CAPC_T	R	%	N/A	0-100	AV:46	capc_t_1
Cir C Saturated Condensing Tmp	SCT_C	R	°F	N/A	±nnn.n	AV:47	sct_c_1
Cir C Saturated Suction Temp	SST_C	R	°F	N/A	±nnn.n	AV:48	sst_c_1
Cir C Suction Gas Temperature	SUCT_T_C	R	°F	N/A	±nnn.n	AV:49	suct_t_c_1
Cir C Suction Pressure	SP_C	R	psi	N/A	±nnn.n	AV:50	sp_c_1
Cir C Suction Superheat Temp	SH_C	R	^F	N/A	±nnn.n	AV:51	sh_c_1
Circuit A Fan #1 Hours	hr_fana1	R	hours	N/A	nnnnn	AV:52	hr_fana1_1
Circuit A Fan #2 Hours	hr_fana2	R	hours	N/A	nnnnn	AV:53	hr_fana2_1
Circuit A Fan #3 Hours	hr_fana3	R	hours	N/A	nnnnn	AV:54	hr_fana3_1
Circuit A Fan #4 Hours	hr_fana4	R	hours	N/A	nnnnn	AV:55	hr_fana4_1
Circuit A Fan #5 Hours	hr_fana5	R	hours	N/A	nnnnn	AV:56	hr_fana5_1
Circuit A Fan #6 Hours	hr_fana6	R	hours	N/A	nnnnn	AV:57	hr_fana6_1
Circuit B Fan #1 Hours	hr_fanb1	R	hours	N/A	nnnnn	AV:58	hr_fanb1_1
Circuit B Fan #2 Hours	hr_fanb2	R	hours	N/A	nnnnn	AV:59	hr_fanb2_1
Circuit B Fan #3 Hours	hr_fanb3	R	hours	N/A	nnnnn	AV:60	hr_fanb3_1
Circuit B Fan #4 Hours	hr_fanb4	R	hours	N/A	nnnnn	AV:61	hr_fanb4_1
Circuit B Fan #5 Hours	hr_fanb5	R	hours	N/A	nnnnn	AV:62	hr_fanb5_1
Circuit B Fan #6 Hours	hr_fanb6	R	hours	N/A	nnnnn	AV:63	hr_fanb6_1
Circuit C Fan #1 Hours	hr_fanc1	R	hours	N/A	nnnnn	AV:64	hr_fanc1_1
Circuit C Fan #2 Hours	hr_fanc2	R	hours	N/A	nnnnn	AV:65	hr_fanc2_1
Circuit C Fan #3 Hours	hr_fanc3	R	hours	N/A	nnnnn	AV:66	hr_fanc3_1
Circuit C Fan #4 Hours	hr_fanc4	R	hours	N/A	nnnnn	AV:67	hr_fanc4_1
Circuit C Fan #5 Hours	hr_fanc5	R	hours	N/A	nnnnn	AV:68	hr_fanc5_1
Circuit C Fan #6 Hours	hr_fanc6	R	hours	N/A	nnnnn	AV:69	hr_fanc6_1
Circuit Loading Sequence	lead_cir	R	N/A	0	0-3	AV:70	lead_cir_1
Compressor A1 Hours	HR_CP_A1	R	hours	N/A	nnnnn	AV:71	hr_cp_a1_1
Compressor A1 Starts	st_cp_a1	R	N/A	N/A	nnnnn	AV:72	st_cp_a1_1
Compressor A2 Hours	HR_CP_A2	R	hours	N/A	nnnnn	AV:73	hr_cp_a2_1
Compressor A2 Starts	st_cp_a2	R	N/A	N/A	nnnnn	AV:74	st_cp_a2_1
Compressor A3 Hours	HR_CP_A3	R	hours	N/A	nnnnn	AV:75	hr_cp_a3_1
Compressor A3 Starts	st_cp_a3	R	N/A	N/A	nnnnn	AV:76	st_cp_a3_1
Compressor A4 Hours	HR_CP_A4	R	hours	N/A	nnnnn	AV:77	hr_cp_a4_1
Compressor A4 Starts	st_cp_a4	R	N/A	N/A	nnnnn	AV:78	st_cp_a4_1
Compressor B1 Hours	HR_CP_B1	R	hours	N/A	nnnnn	AV:79	hr_cp_b1_1
Compressor B1 Starts	st_cp_b1	R	N/A	N/A	nnnnn	AV:80	st_cp_b1_1
Compressor B2 Hours	HR_CP_B2	R	hours	N/A	nnnnn	AV:81	hr_cp_b2_1
Compressor B2 Starts	st_cp_b2	R	N/A	N/A	nnnnn	AV:82	st_cp_b2_1
Compressor B3 Hours	HR_CP_B3	R	hours	N/A	nnnnn	AV:83	hr_cp_b3_1
Compressor B3 Starts	st_cp_b3	R	N/A	N/A	nnnnn	AV:84	st_cp_b3_1
Compressor B4 Hours	HR_CP_B4	R	hours	N/A	nnnnn	AV:85	hr_cp_b4_1
Compressor B4 Starts	st_cp_b4	R	N/A	N/A	nnnnn	AV:86	st_cp_b4_1
Compressor C1 Hours	HR_CP_C1	R	hours	N/A	nnnnn	AV:87	hr_cp_c1_1
Compressor C1 Starts	st_cp_c1	R	N/A	N/A	nnnnn	AV:88	st_cp_c1_1
Compressor C2 Hours	HR_CP_C2	R	hours	N/A	nnnnn	AV:89	hr_cp_c2_1
Compressor C2 Starts	st_cp_c2	R	N/A	N/A	nnnnn	AV:90	st_cp_c2_1
Compressor C3 Hours	HR_CP_C3	R	hours	N/A	nnnnn	AV:91	hr_cp_c3_1
Compressor C3 Starts	st_cp_c3	R	N/A	N/A	nnnnn	AV:92	st_cp_c3_1
Compressor C4 Hours	HR_CP_C4	R	hours	N/A	nnnnn	AV:93	hr_cp_c4_1
Compressor C4 Starts	st_cp_c4	R	N/A	N/A	nnnnn	AV:94	st_cp_c4_1
Control Point	CTRL_PNT	R	°F	N/A	±nnn.n	AV:96	ctrl_pnt_1
Controlled Water Temp	CTRL_WT	R	°F	N/A	±nnn.n	AV:95	ctrl_wt_1
Cooler Fluid Type	flui_typ	R	N/A	1	1=Water, 2=Brine 3=Low Brine	AV:97	flui_typ_1

LEGEND

CCN — Carrier Comfort Network
CHWS — Chilled Water Setpoint
DGT — Discharge Gas Temperature
DO — Discrete Output
EWT — Entering Water Temperature
EXV — Electronic Expansion Valve
OAT — Outdoor Air Temperature
R — Read
W — Write

Table G — Network Points List (cont)

POINT DESCRIPTION	POINT NAME	READ/ WRITE	UNITS	DEFAULT VALUE	RANGE	BACNET OBJECT ID	BACNET OBJECT NAME
Cooler Heater Active	Mode_06	R	N/A	N/A	Yes/No	BV:58	mode_06_1
Cooler Heater Command	COOLHEAT	R	N/A	N/A	On/Off	BV:59	coolheat_1
Cooler Pumps Rotation	Mode_07	R	N/A	N/A	Yes/No	BV:60	mode_07_1
Cooler Pumps Sequence	pump_seq	R	N/A	0	0-4	AV:98	pump_seq_1
Cooling Ice Setpoint	ice_sp	R	^F	1	0.2-2.0	AV:99	ice_sp_1
Cooling Ramp Loading	cramp_sp	R	^F	0	-30 ->30	AV:100	cramp_sp_1
Cooling Reset Deg. Value	cr_deg	R	°F	44	-20.0->78.8	AV:101	cr_deg_1
Cooling Setpoint 1	csp1	R	°F	44	-20.0->78.8	AV:102	csp1_1
Cooling Setpoint 2	csp2	R	min	N/A	nn	AV:103	csp2_1
Critical Alarm Status	CRITICAL	R	N/A	N/A	On/Off	BV:61	critical_1
Current Full Reset Value	v_cr_fu	R	ma	0	0-20	AV:104	v_cr_fu_1
Current No Reset Value	v_cr_no	R	ma	0	0-20	AV:105	v_cr_no_1
Current Setpoint	SP	R	°F	N/A	±nnn.n	AV:3500	chws_sp_1
Defrost Active On Cir A	Mode_19	R	N/A	N/A	Yes/No	BV:62	mode_19_1
Defrost Active On Cir B	Mode_20	R	N/A	N/A	Yes/No	BV:63	mode_20_1
Delta T Full Reset Value	dt_cr_fu	R	^F	0	0-25	AV:106	dt_cr_fu_1
Delta T No Reset Value	dt_cr_no	R	^F	0	0-25	AV:107	dt_cr_no_1
Demand Limit Active	Mode_04	R	N/A	N/A	Yes/No	BV:64	mode_04_1
Demand Limit Type Select	lim_sel	R/W	N/A	0	0=None, 1=Switch control, 2=4-20mA Control	AV:108	lim_sel_1
Electric Heat Active	Mode_15	R	N/A	N/A	0-4/Off	BV:67	mode_15_1
Electrical Box Safety	ELEC_BOX	R	N/A	N/A	Yes/No	BV:65	elec_box_1
Electrical Heat Stage	EHS_STEP	R	N/A	N/A	Open/Close	BV:66	ehs_step_1
Element Comm Status		R	N/A	N/A		BV:2999	element_stat_1
Emergency Stop	EMSTOP	R/W	N/A	N/A	Enable/Disable	BV:68	emstop_1
Equipment Alarm		R	N/A	N/A		BV:146	element_alarm_1
External Temperature	OAT	R	°F	N/A	±nnn.n	AV:109	oat_1
Flow Checked if Pump Off	pump_loc	R/W	N/A	Yes	Yes/No	BV:69	pump_loc_1
Free Cooling Active	Mode_13	R	N/A	N/A	Yes/No	BV:70	mode_13_1
Free Cooling Disable Sw.	FC_SW	R	N/A	N/A	Yes/No	BV:72	fc_sw_1
Free Cooling Disable?	FC_DSBLE	R	N/A	N/A	Yes/No	BV:71	fc_dsble_1
Heat Reclaim Pump Hours	hr_hpump	R	hours	N/A	nnnnn	AV:112	hr_hpump_1
Heat Reclaim Select	RECL_SEL	R	N/A	N/A	Yes/No	BV:74	recl_sel_1
Heat/Cool Select	HC_SEL	R/W	N/A	N/A	0=Cool, 1=Heat, 2=Auto	AV:110	hc_sel_1
Heat/Cool Status	HEATCOOL	R	N/A	N/A	0=Cool, 1=Heat 2=Stand-by, 3=Both	AV:111	heatcool_1
Heating Low EWT Lockout	Mode_16	R	N/A	N/A	Yes/No	BV:73	mode_16_1
High DGT Circuit A	Mode_24	R	N/A	N/A	Yes/No	BV:75	mode_24_1
High DGT Circuit B	Mode_25	R	N/A	N/A	Yes/No	BV:76	mode_25_1
High DGT Circuit C	Mode_26	R	N/A	N/A	Yes/No	BV:77	mode_26_1
High Pres Override Cir A	Mode_27	R	N/A	N/A	Yes/No	BV:78	mode_27_1
High Pres Override Cir B	Mode_28	R	N/A	N/A	Yes/No	BV:79	mode_28_1
High Pres Override Cir C	Mode_29	R	N/A	N/A	Yes/No	BV:80	mode_29_1
Ice Done Storage Switch	ICE_SW	R	N/A	N/A	Open/Close	BV:81	ice_sw_1
Ice Mode in Effect	Mode_18	R	N/A	N/A	Yes/No	BV:82	mode_18_1
Interlock Status	LOCK_1	R	N/A	N/A	Open/Close	BV:83	lock_1_1
Lag Capacity Limit Value	LAG_LIM	R	%	N/A	nnn	AV:113	lag_lim_1
Limit 4-20mA Signal	LIM_ANAL	R	ma	N/A	±nn.n	AV:114	lim_anal_1
Limit Switch 1 Status	LIM_SW1	R	N/A	N/A	Open/Close	BV:84	lim_sw1_1
Limit Switch 2 Status	LIM_SW2	R	N/A	N/A	Open/Close	BV:85	lim_sw2_1
Local Schedule		R	N/A	N/A		BV:2	schedule_1

LEGEND

CCN — Carrier Comfort Network
CHWS — Chilled Water Setpoint
DGT — Discharge Gas Temperature
DO — Discrete Output
EWT — Entering Water Temperature
EXV — Electronic Expansion Valve
OAT — Outdoor Air Temperature
R — Read
W — Write

Table G — Network Points List (cont)

POINT DESCRIPTION	POINT NAME	READ/ WRITE	UNITS	DEFAULT VALUE	RANGE	BACNET OBJECT ID	BACNET OBJECT NAME
Low Suction Circuit A	Mode_21	R	N/A	N/A	Yes/No	BV:86	mode_21_1
Low Suction Circuit B	Mode_22	R	N/A	N/A	Yes/No	BV:87	mode_22_1
Low Suction Circuit C	Mode_23	R	N/A	N/A	Yes/No	BV:88	mode_23_1
mA For 0% Demand Limit	lim_ze	R/W	mA	0	0-20	AV:117	lim_ze_1
mA For 100% Demand Limit	lim_mx	R/W	mA	0	0-20	AV:118	lim_mx_1
Machine Operating Hours	HR_MACH	R	hours	N/A	nnnnn	AV:115	hr_mach_1
Machine Starts Number	st_mach	R	N/A	N/A	nnnnn	AV:116	st_mach_1
Master/Slave Select	ms_sel	R/W	N/A	0	0= Disable, 1=Master, 2=Slave	AV:119	ms_sel_1
Minutes Left for Start	min_left	R	min	N/A	0-15	AV:120	min_left_1
Night Low Noise Active	Mode_09	R	N/A	N/A	Yes/No	BV:89	mode_09_1
OAT Full Reset Value	oatcr_fu	R	°F	14	14-125	AV:121	oatcr_fu_1
OAT No Reset Value	oatcr_no	R	°F	0	0-25	AV:122	oatcr_no_1
Occupied Override Switch	OCC_OVSW	R	N/A	N/A	Open/Close	BV:90	occ_ovsw_1
On/Off - Remote Switch	ONOFF_SW	R	N/A	N/A	Open/Close	BV:91	onoff_sw_1
Optional Space Temp	SPACETMP	R	°F	N/A	±nnn.n	AV:123	spacetmp_1
Pass For All User Config	all_pass	R/W	N/A	No	No/Yes	BV:92	all_pass_1
Percent Total Capacity	CAP_T	R	%	N/A	nnn	AV:1700	cap_t_1
Pump Auto Rotation Delay	pump_del	R	hours	48	24-3000	AV:124	pump_del_1
Pump Periodic Start	Mode_08	R	N/A	N/A	Yes/No	BV:93	mode_08_1
Pump Run Status	PUMP_DEF	R	N/A	N/A	Open/Close	BV:94	pump_def_1
Pump Sticking Protection	pump_per	R/W	N/A	No	No/Yes	BV:95	pump_per_1
Pumpdown Pressure Cir A	PD_P_A	R	psi	N/A	±nnn.n	AV:125	pd_p_a_1
Pumpdown Pressure Cir B	PD_P_B	R	psi	N/A	±nnn.n	AV:126	pd_p_b_1
Pumpdown Saturated Tmp A	hr_sat_a	R	°F	N/A	n	AV:127	hr_sat_a_1
Pumpdown Saturated Tmp B	hr_sat_b	R	°F	N/A	n	AV:128	hr_sat_b_1
Ramp Loading Active	Mode_05	R	N/A	N/A	Yes/No	BV:96	mode_05_1
Ramp Loading Select	ramp_sel	R	N/A	No	No/Yes	BV:97	ramp_sel_1
Ready or Running Status	READY	R	N/A	N/A	On/Off	BV:98	ready_1
Reclaim Active	Mode_14	R	N/A	N/A	Yes/No	BV:99	mode_14_1
Reclaim Condenser Flow	condflow	R	N/A	N/A	On/Off	BV:100	condflow_1
Reclaim Condenser Heater	cond_htr	R	N/A	N/A	On/Off	BV:101	cond_htr_1
Reclaim Condenser Pump	CONDPUMP	R	N/A	N/A	On/Off	BV:102	condpump_1
Reclaim Condenser Pump	COND_PMP	R	N/A	N/A	On/Off	BV:103	cond_pmp_1
Reclaim Deadband	hr_deadb	R/W	^F	9.0	5-27	AV:129	hr_deadb_1
Reclaim Entering Fluid	HR_EWT	R	°F	N/A	±nnn.n	AV:130	hr_ewt_1
Reclaim Leaving Fluid	HR_LWT	R	°F	N/A	±nnn.n	AV:131	hr_lwt_1
Reclaim Setpoint	rsp	R/W	°F	122	95-122	AV:132	rsp_1
Reclaim Status Circuit A	hrstat_a	R	N/A	N/A	n	AV:133	hrstat_a_1
Reclaim Status Circuit B	hrstat_b	R	N/A	N/A	n	AV:134	hrstat_b_1
Reclaim Valve Position	hr_v_pos	R	%	N/A	±nnn.n	AV:135	hr_v_pos_1
Remote Heat/Cool Switch	HC_SW	R	N/A	N/A	Open/Close	BV:104	hc_sw_1
Remote Interlock Status	REM_LOCK	R	N/A	N/A	Open/Close	BV:105	rem_lock_1
Remote Reclaim Switch	RECL_SW	R	N/A	N/A	Open/Close	BV:106	recl_sw_1
Remote Setpoint Switch	SETP_SW	R	N/A	N/A	Open/Close	BV:107	setp_sw_1
Reset in Effect	Mode_03	R	N/A	N/A	Yes/No	BV:108	mode_03_1
Reset/Setpoint 4-20mA In	SP_RESET	R	ma	N/A	±nn.n	AV:136	sp_reset_1
Rotate Pumps Now?	ROT_PUMP	R	N/A	N/A	Yes/No	BV:109	rot_pump_1

LEGEND

CCN — Carrier Comfort Network
CHWS — Chilled Water Setpoint
DGT — Discharge Gas Temperature
DO — Discrete Output
EWT — Entering Water Temperature
EXV — Electronic Expansion Valve
OAT — Outdoor Air Temperature
R — Read
W — Write

Table G — Network Points List (cont)

POINT DESCRIPTION	POINT NAME	READ/ WRITE	UNITS	DEFAULT VALUE	RANGE	BACNET OBJECT ID	BACNET OBJECT NAME
Run Status	STATUS	R	N/A	N/A	0=Off, 1=Running 2=Stopping, 3= Delay 4=Tripout, 5=Ready 6=Override, 7=Defrost 8=Run Test, 9=Test	AV:137	status_1
Running Status	RUNNING	R	N/A	N/A	On/Off	BV:110	running_1
Second Setpoint in Use	Mode_02	R	N/A	N/A	Yes/No	BV:111	mode_02_1
Setpoint Occupied?	SP_OCC	R	N/A	N/A	Yes/No	BV:112	sp_occ_1
Shutdown Indicator State	SHUT-DOWN	R	N/A	N/A	On/Off	BV:113	shutdown_1
Space T Full Reset Value	spacr_fu	R	°F	14	14-125	AV:138	spacr_fu_1
Space T No Reset Value	spacr_no	R	°F	14	14-125	AV:139	spacr_no_1
Staged Loading Sequence	seq_typ	R	N/A	No	No/Yes	BV:114	seq_typ_1
Starts Max During 1 Hour	st_cp_mx	R	N/A	N/A	nnnnn	AV:141	st_cp_mx_1
Starts/hr From Last 24 h	st_cp_av	R	N/A	N/A	nnnnn	AV:140	st_cp_av_1
Startup Delay in Effect	Mode_01	R	N/A	N/A	Yes/No	BV:115	mode_01_1
Sub Condenser Temp Cir A	hr_subta	R	°F	N/A	±nnn.n	AV:142	hr_subta_1
Sub Condenser Temp Cir B	hr_subtb	R	°F	N/A	±nnn.n	AV:143	hr_subtb_1
Subcooling Temperature A	hr_subca	R	°F	N/A	±nnn.n	AV:144	hr_subca_1
Subcooling Temperature B	hr_subcb	R	°F	N/A	±nnn.n	AV:145	hr_subcb_1
Superheat Override Cir A	Mode_30	R	N/A	N/A	Yes/No	BV:116	mode_30_1
Superheat Override Cir B	Mode_31	R	N/A	N/A	Yes/No	BV:117	mode_31_1
Superheat Override Cir C	Mode_32	R	N/A	N/A	Yes/No	BV:118	mode_32_1
Switch Limit Setpoint 1	lim_sp1	R	%	100	0-100	AV:146	lim_sp1_1
Switch Limit Setpoint 2	lim_sp2	R	%	100	0-100	AV:147	lim_sp2_1
Switch Limit Setpoint 3	lim_sp3	R	%	100	0-100	AV:148	lim_sp3_1
System Cooling Demand Level		R	N/A	N/A		AV:9006	cool_demand_level_1
System Demand Limiting		R	N/A	N/A		BV:3	dem_lmt_act_1
System Manager Active	Mode_10	R	N/A	N/A	Yes/No	BV:119	mode_10_1
System OAT Master		R	N/A	N/A		AV:80001	mstr_oa_temp_1
Unit Off to On Delay	/off_on_d	R	min	1	1-15	AV:149	off_on_d_1
User Defined Analog 1		R	N/A	N/A		AV:2901	user_analog_1_1
User Defined Analog 2		R	N/A	N/A		AV:2902	user_analog_2_1
User Defined Analog 3		R	N/A	N/A		AV:2903	user_analog_3_1
User Defined Analog 4		R	N/A	N/A		AV:2904	user_analog_4_1
User Defined Analog 5		R	N/A	N/A		AV:2905	user_analog_5_1
User Defined Binary 1		R	N/A	N/A		BV:2911	user_binary_1_1
User Defined Binary 2		R	N/A	N/A		BV:2912	user_binary_2_1
User Defined Binary 3		R	N/A	N/A		BV:2913	user_binary_3_1
User Defined Binary 4		R	N/A	N/A		BV:2914	user_binary_4_1
User Defined Binary 5		R	N/A	N/A		BV:2915	user_binary_5_1
Water Cond Enter Valve A	hr_ew_a	R	N/A	N/A	On/Off	BV:120	hr_ew_a_1
Water Cond Enter Valve B	hr_ew_b	R	N/A	N/A	On/Off	BV:121	hr_ew_b_1
Water Cond Leaving Val A	hr_lw_a	R	N/A	N/A	On/Off	BV:122	hr_lw_a_1
Water Cond Leaving Val B	hr_lw_b	R	N/A	N/A	On/Off	BV:123	hr_lw_b_1
Water Exchanger Entering Temp	EWT	R	°F	N/A	±nnn.n	AV:150	ewt_1
Water Exchanger Leaving Temp	LWT	R	°F	N/A	±nnn.n	AV:151	lwt_1
Water Pump #1 Command	CPUMP_1	R	N/A	N/A	On/Off	BV:124	cpump_1_1
Water Pump #1 Hours	hr_cpum1	R	hours	N/A	nnnnn	AV:152	hr_cpum1_1
Water Pump #2 Command	CPUMP_2	R	N/A	N/A	On/Off	BV:125	cpump_2_1
Water Pump #2 Hours	hr_cpum2	R	hours	N/A	nnnnn	AV:153	hr_cpum2_1

LEGEND

CCN — Carrier Comfort Network
CHWS — Chilled Water Setpoint
DGT — Discharge Gas Temperature
DO — Discrete Output
EWT — Entering Water Temperature
EXV — Electronic Expansion Valve
OAT — Outdoor Air Temperature
R — Read
W — Write

INDEX

Actual start-up *44*
Alarms and alerts *57*
  Alarm codes *58-62*
  Alarm descriptions *63, 108-111*
BACnet communications wiring *117-126*
Boards
  Board addresses *16*
Capacity control *20*
  Capacity control overrides *22*
  Compressor stages and circuit cycling *21, 22*
  Compressor starts and run hours *20*
CCN
  *Comfort*Link™ CCN communication wiring *16, 17*
  Interface *16*
CCN alarm description *108-111*
CCN control *33*
CCN global schedule *32*
CCN tables *94-107*
Chilled water flow switch *53*
Compressor protection *56*
Compressors *56*
  Oil charge *56*
  Replacement *56*
  System burnout cleanup procedure *57*
Condenser coils
  Cleaning round tube plate fin coils *53*
  Cleaning MCHX coils *55*
Condenser fans *55*
Configuration point description conventions *3*
Configuration set point limits *33*
Control methods *32*
  CCN control *33*
  CCN global schedule *32*
  Switch control *32*
  Time schedule *32*
  Unit run status *33*
Controls *5-43*
  Board addresses *16*
  Capacity control *20*
  Carrier Comfort Network® interface *16*
  *Comfort*Link display menu structure *5*
  Configuring the master chiller *18*
  Configuring the slave chiller *19*
  Control methods *32*
  Control module communication *16*
  Cooler pump control *31*
  Demand limit *41*
  Dual chiller control *17*
  Electronic expansion valve (EXV) Board *8, 9*
  Emergency on/off switch *14*
  Enable-off-remote contact switch *14*
  Energy management module (EMM) *14, 15*
  Energy management module (EMM) inputs and outputs *15*
  EXV1 board inputs and outputs *8*
  EXV2 inputs and outputs *10*
  Fan board 1 outputs *11*
  Fan board 2 outputs *12*
  Fan board 3 inputs and outputs *13*
  Fan boards *9*
  General *2-5*
  Heat reclaim *49*
  Local equipment network *16*
  Low ambient head pressure control *24*
  Machine control *32*
  Main Base Board *5*
  Main Base Board inputs and outputs *6*
  Minimum load control *17*
  Minutes off time *17*
  Navigator™ module *3, 4*
  Ramp loading *17*
  Remote alarm and alert relays *41*
  Reverse rotation board *14*
  Scroll protection module (SPM) *7, 8*
  Scroll protection module inputs and outputs *8*
  Scrolling marquee display *3*
  Temperature reset *33*
Cooler head bolts
  Tightening *53-55*
Cooler protection *51*
  Chilled water flow switch *53*
  Flow rate *53*
  Freeze protection *51*
  Loss of fluid flow protection *51*
  Low fluid temperature *51*
  Plug components *52*
  Tightening cooler head bolts *53-55*
  Tube plugging *51*
Cooler pump control *31*
Cooling set point selection *33*
  4 to 20 mA input *33*
  Configuration set point limits *33*
  Control methods and cooling set points table *32*
  Dual switch *33*
  Ice mode *33*
  Set point 1 *33*
  Set point 2 *33*
  Set point occupancy *33*
Crankcase heaters *56*
Demand limit *41*
  2-step switch controlled *41*
  2-step switch controlled configuration table *42*
  CCN loadshed controlled *41*
  Demand limit signal *41*
  Externally powered *41*
  Externally powered demand limit configuration table *43*
Electronic expansion valve *8, 49*
  Cutaway view of *50*
  Filter drier *51*
  Inspecting/opening *51*
  Installing motor *51*
  Liquid line service valve *51*
  Moisture liquid indicator *51*
  Troubleshooting procedure *50*
Flow rate *53*
Freeze protection *51*
Head pressure control. *See* low ambient head pressure control
Heat reclaim module *49*
High-side protection *56*
Local display tables *82-93*
Loss of fluid flow protection *51*
Low ambient head pressure control *24*
  Fan Staging *25*
  Operating instructions *24*
Low fluid temperature *51*
Machine control *32*
Maintenance *57, 113-116*
Minimum and maximum cooler flow rates table (sizes 060-300) *45*
Minimum and maximum cooler flow rates table (sizes 315-390) *45*
Minimum fluid loop volume *44*
Modular unit combinations *3*
Navigator display
  Alarms mode *93*
  Configuration mode *88, 89*
  Inputs mode *86*
  Operating mode *93*
  Outputs mode *87*
  Password *3*
  Pressure mode *85*
  Run status mode *82, 83*
  Service test mode *84*
  Set points mode *86*
  Temperature mode *85*
  Time clock mode *90-92*
Navigator module *3*
  Adjusting the backlight brightness *4*
  Adjusting the contrast *4*

Operating limitations *44*
Flow rate requirements *45*
Minimum and maximum cooler flow rates (sizes 060-300) *45*
Minimum and maximum cooler flow rates (sizes 315-390) *45*
Minimum fluid loop volume *44*
Password *3*
Voltage *44*
Plug components *52*
Recommended maintenance schedule *57, 113-116*
Refrigerant circuit *56*
Refrigerant feed components
Electronic expansion valve *49*
Relief devices *56*
High-side protection *56*
Low-side protection *56*
Safety considerations *2*
Safety devices *56*
Compressor protection *56*
Crankcase heaters *56*
Scrolling marquee display *3*
Alarms mode *93*
Configuration mode *88, 89*
Display menu structure *4*
Inputs mode *86*
Operating mode *93*
Outputs mode *87*
Password *3*
Pressure mode *85*
Run status mode *82, 83*
Service test mode *84*
Set points mode *86*
Temperature mode *85*
Time clock mode *90-92*
Service *49-57*
Coil maintenance and cleaning *53-55*
Compressors *56, 57*
Condenser fans *55*
Cooler protection *51*
Electronic expansion valve (EXV) *49*
MCHX (microchannel) *55*
Refrigerant circuit *56*
Relief devices *56*
RTPF (round tube, plate fin) *53*
Safety devices *56*
Start-up *44,45*
Actual start-up *44*
Operating limitations *44*
Pre-start-up *43,44*
System check *43*
Start-up and operation. *See* Start-up Checklist
Start-up checklist *CL-1 to Cl-9*
Switch control *32*
System check *43*
Temperature limits
Standard units *44*
Low ambient operation *44*
Temperature reset *33*
4 to 20mA temperature reset *38*
4 to 20mA temperature reset configuration table *40*
Chilled water temperature control *35*
Outdoor air temperature reset *35*
Outdoor air temperature reset configuration table *37*
Space temperature reset *38*
Space temperature reset configuration *39*
Water temperature difference reset configuration *36*
Thermistors *71*
Compressor return gas temperature *71*
Cooler entering fluid sensor *71*
Cooler leaving fluid sensor *71*
Dual chiller LWT *71*
Outdoor air temperature *72*
Remote space temperature *72*
Typical space temperature sensor wiring *74*
Time schedule *32*
Troubleshooting *57-81*
Sensors *71*
Service test *74*
Thermistors *71*
Tube plugging *51*

Copyright 2011 Carrier Corporation

START-UP CHECKLIST FOR 30RB LIQUID CHILLER

A. PROJECT INFORMATION

Job Name _____
Address _____
City _____ State _____ Zip _____

Installing Contractor_____
Sales Office _____
Start-Up Performed By _____

Design Information

	CAPACITY	EWT	LWT	FLUID TYPE	FLOW RATE	P.D.	AMBIENT
Cooler							

Unit

Model _____
Serial _____

Cooler

Model _____
Serial _____

Compressors

A1)
Model _____
Serial _____
SPM Address _____

A2)
Model _____
Serial _____
SPM Address _____

A3)
Model _____
Serial _____
SPM Address _____

A4)
Model _____
Serial _____
SPM Address _____

B1)
Model _____
Serial _____
SPM Address _____

B2)
Model _____
Serial _____
SPM Address _____

B3)
Model _____
Serial _____
SPM Address _____

B4)
Model _____
Serial _____
SPM Address _____

C1)
Model _____
Serial _____
SPM Address _____

C2)
Model _____
Serial _____
SPM Address _____

C3)
Model _____
Serial _____
SPM Address _____

C4)
Model _____
Serial _____
SPM Address _____

Hydronic Package

P1)
Model _____
Serial _____

P2)
Model _____
Serial _____

B. PRELIMINARY EQUIPMENT CHECK (This section to be completed by installing contractor)

1. Is there any physical damage? ☐ Yes ☐ No
   a. Will this prevent start-up? ☐ Yes ☐ No
   Description _____
   _____
2. Unit is installed level as per the installation instructions. ☐ Yes ☐ No
3. Power supply agrees with the unit nameplate. ☐ Yes ☐ No
4. Correct control voltage _____vac. Check transformer primary on 208/230 v. ☐ Yes ☐ No
5. Electrical power wiring is installed properly. ☐ Yes ☐ No
6. Unit is properly grounded. ☐ Yes ☐ No

Manufacturer reserves the right to discontinue, or change at any time, specifications or designs without notice and without incurring obligations.

7. Electrical circuit protection has been sized and installed properly. ☐ Yes ☐ No
8. All terminals are tight. ☐ Yes ☐ No
9. All plug assemblies are tight. ☐ Yes ☐ No
10. All cables, thermistors and transducers have been inspected for cross wires. ☐ Yes ☐ No
11. All thermistors are fully inserted into wells. ☐ Yes ☐ No
12. Crankcase heaters energized for 24 hours before start-up. ☐ Yes ☐ No
13. All armatures more freely on contactors. ☐ Yes ☐ No

Chilled Water System Check

1. All chilled water valves are open. ☐ Yes ☐ No
2. All piping is connected properly. ☐ Yes ☐ No
3. All air has been purged from the system. ☐ Yes ☐ No
4. Chilled water pump is operating with the correct rotation. ☐ Yes ☐ No
5. Chilled water pump starter interlocked with chiller. ☐ Yes ☐ No
6. Chilled water flow switch operational. ☐ Yes ☐ No
7. Inlet piping to cooler includes a 20 mesh strainer. ☐ Yes ☐ No
8. Water loop volume greater than 3 gal/ton for air conditioning or 6 gal/ton for process cooling and low ambient operation. ☐ Yes ☐ No
9. Proper loop freeze protection provided to ____ °F (°C). ☐ Yes ☐ No
   Antifreeze type_____ Concentration _____%.
   (If antifreeze solution is not utilized on 30RB machines and the minimum outdoor ambient is below 32 F (0° C) then items 10 and 11 have to be completed to provide cooler freeze protection to –20 F. Refer to Installation Instructions for proper cooler winterization procedure.)
10. Outdoor piping wrapped with electric heater tape. ☐ Yes ☐ No
11. Cooler heaters installed and operational. ☐ Yes ☐ No
12. Is the unit equipped with low ambient head pressure control? ☐ Yes ☐ No
    a. If yes, are wind baffles installed? (Required if chiller will run below 32 F and be exposed to the wind.) ☐ Yes ☐ No
13. Are there any VFDs on the chilled water pumps?
    a. Primary loop ☐ Yes ☐ No
    b. Secondary loop ☐ Yes ☐ No

C. UNIT START-UP

1. All liquid line service valves located near EXVs are open. ☐ Yes ☐ No
2. All discharge service valves are open. ☐ Yes ☐ No
3. All suction service valves are open. ☐ Yes ☐ No
4. All compressor rack holddown bolts removed. ☐ Yes ☐ No
5. Leak check unit. Locate, repair and report any refrigerant leaks. ☐ Yes ☐ No
6. Voltage at terminal block is within unit nameplate range. ☐ Yes ☐ No
7. Check voltage imbalance: A-B_____ A-C_____B-C_____
   Average voltage = _____ (A-B + A-C + B-C)/3
   Maximum deviation from average voltage = _____
   Voltage imbalance = _____% (max. deviation / average voltage) X 100
   Is voltage imbalance less than 2%. ☐ Yes ☐ No
   (DO NOT start chiller if voltage imbalance is greater than 2%. Contact local utility for assistance.)
8. Verify cooler flow rate ☐ Yes ☐ No
   Pressure entering cooler _____ psig (kpa)
   Pressure leaving cooler _____ psig (kpa)
   Cooler pressure drop _____ psig (kpa)
   Psig x 2.31 ft./psi = _____ ft of water
   kPa x 0.334 m/psi = _____ m of water
   Cooler flow rate _____ gpm (l/s) (See Cooler Pressure Drop Curve provided in the 30RB Installation Instructions.)
9. Verify that isolation valves on factory-installed pump packages are properly positioned and locked prior to start-up (slot in-line with piping on both sides of pump). ☐ Yes ☐ No

CUT ALONG DOTTED LINE

CUT ALONG DOTTED LINE

Start and operate machine. Complete the following:

1. Complete component test (make sure EXVs are checked after liquid line service valves are opened).
2. Check refrigerant and oil charge. Record charge information below.
3. Record compressor and condenser fan motor current.
4. Record operating data.
5. Provide operating instructions to owner's personnel. Instruction time _____ hours

	Circuit A	Circuit B	Circuit C
Refrigerant Charge	_____	_____	_____
Additional charge required	_____	_____	_____

Oil Charge

Indicate level in sight glass of compressors A1, B1 and C1.

Additional oil charge required.

Circuit A _____

Circuit B _____

Circuit C _____

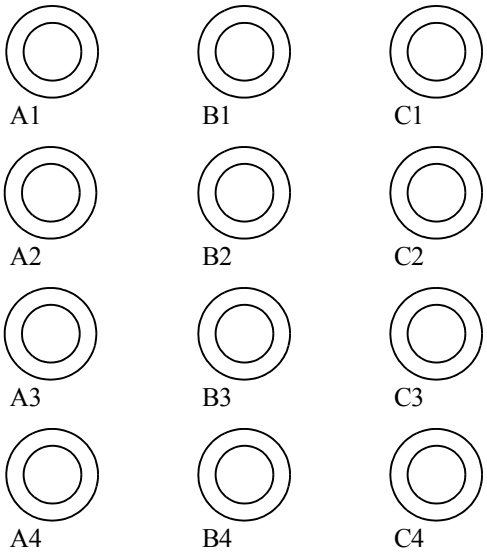

Record Software Versions

MODE — RUN STATUS

SUB-MODE	ITEM	DISPLAY	ITEM EXPANSION
VERS	APPL		CSA-SR- __ __ __ __ __ __
	MARQ		
	EXV1		
	EXV2		
	AUX1		
	AUX2		
	AUX3		

(Press ENTER and ESCAPE simultaneously to obtain software versions)

Record Configuration Information

MODE — CONFIGURATION

SUB-MODE	ITEM	DISPLAY	ITEM EXPANSION	ENTRY
DISP	TEST	OFF/ON	Test Display LED's	
	METR	US-METR	Metric Display	
	LANG	x	Language	
UNIT	TYPE	x	Unit Type	
	TONS	xxx	Unit Size	
	VAR.A	x	NB Fan on Varifan CIR A	
	VAR.B	x	NB Fan on Varifan CIR B	
	VAR.C	x	NB Fan on Varifan CIR C	
	HGBP	x	Hot Gas Bypass Control	
	60HZ	NO/YES	60 Hz Frequency	
	RECL	NO/YES	Heat Reclaim Select	
	EHS	x	Electric Heater Stage	
	EMM	NO/YES	EMM Module Installed	
	PAS.E	DSBL/ENBL	Password Enable	
	PASS	xxxx	Password Protection Must be Disabled	
	FREE	NO/YES	Free Cooling Select	
	PD4.D	NO/YES	Pro_Dialog Users Display	
	BOIL	OFF/ON	Boiler Command Select	
SERV	FLUD	x	Cooler Fluid Type	
	MOP	xx.x	EXV MOP Setpoint	
	HP.TH	xxx.x	High Pressure Threshold	
	SHP.A	xx.x	Circuit A Superheat Setp	
	SHP.B	xx.x	Circuit B Superheat Setp	
	SHP.C	xx.x	Circuit C Superheat Setp	
	HTR	xx.x	Cooler Heater DT Setp	
	EWTO	NO/YES	Entering Water Control	
	AU.SM	NO/YES	Auto Start When SM Lost	
	BOTH	NO/YES	HSM Both Command Select	
	LLWT	xx	Brine Min. Fluid Temp.	
	LOSP	xx.x	Brine Freeze Setpoint	
	HD.PG	xx.x	Varifan Proportion Gain	
	HD.DG	xx.x	Varifan Derivative Gain	
	HD.IG	xx.x	Varifan Integral Gain	
	HR.MI	xxx.x	Reclaim Water Valve Min	
	HR.MA	xxx.x	Reclaim Water Valve Max	
	AVFA	NO/YES	Attach Drive to Fan A	
	AVFB	NO/YES	Attach Drive to Fan B	
	AVFC	NO/YES	Attach Drive to Fan C	
OPTN	CCNA	xxx	CCN Address	
	CCNB	xxx	CCN Bus Number	
	BAUD	x	CCN Baud Rate	
	LOAD	x	Loading Sequence Select	
	LLCS	x	Lead/Lag Circuit Select	
	RL.S	ENBL/DSBL	Ramp Load Select	
	DELY	xx	Minutes Time Off	
	ICE.M	ENBL/DSBL	Ice Mode Enable	
	PUMP	x	Cooler Pumps Sequence	
	ROT.P	xxxx	Pump Rotation Delay	
	PM.PS	NO/YES	Periodic Pump Start	
	P.SBY	NO/YES	Stop Pump in Standby	
	P.LOC	NO/YES	Flow Checked if Pump Off	
	LS.ST	xx.xx	Night Low Noise Start	
	LS.ND	xx.xx	Night Low Noise End	
	LS.LT	xxx	Low Noise Capacity Lim	
	OA.TH	xx.x	Heat Mode OAT Threshold	
	FREE	xx.x	Free Cooling OAT Limit	
	BO.TH	xx.x	Boiler OAT Threshold	
	EHST	xx.xx	Elec Stag OAT Threshold	
	EHSB	NO/YES	Last Heat Elec Backup	
	E.DEF	NO/YES	Quick EHS in Defrost	
	EHSP	xx	Elec Heat Pulldown	
	AUTO	NO/YES	Auto Changeover Select	

CUT ALONG DOTTED LINE

CUT ALONG DOTTED LINE

MODE — CONFIGURATION (cont)

SUB-MODE	ITEM	DISPLAY	ITEM EXPANSION	ENTRY
RSET	CRST	x	Cooling Reset Type	
	HRST	x	Heating Reset Type	
	DMDC	x	Demand Limit Select	
	DMMX	xx.x	mA for 100% Demand Lim	
	DMZE	xx.x	mA for 0% Demand Limit	
	MSSL	x	Master/Slave Select	
	SLVA	xxx	Slave Address	
	LLBL	ENBL/DSBL	Lead/Lag Balance Select	
	LLBD	xxx	Lead/Lag Balance Delta	
	LLDY	xx	Lag Start Delay	
	LAGP	x	Lag Unit Pump Select	
	LPUL	xx	Lead Pulldown Time	

MODE — SETPOINT

SUB-MODE	ITEM	DISPLAY	ITEM EXPANSION	ENTRY
COOL	CSP.1	xxx.x	Cooling Setpoint 1	
	CSP.2	xxx.x	Cooling Setpoint 2	
	CSP.3	xxx.x	Ice Setpoint	
	CRV1	xx.x	Current No Reset Value	
	CRV2	xx.x	Current Full Reset Value	
	CRT1	xxx.x	Delta T No Reset Temp	
	CRT2	xxx.x	Delta T Full Reset Value	
	CRO1	xxx.x	OAT No Reset Temp	
	CRO2	xxx.x	OAT Full Reset Temp	
	CRS1	xxx.x	Space T No Reset Temp	
	CRS2	xxx.x	Space T Full Reset Temp	
	DGRC	xx.x	Degrees Cool Reset	
	CAUT	xx.x	Cool Changeover Setpt	N/A
	CRMP	x.x	Cool Ramp Loading	
HEAT	HSP.1	xxx.x	Heating Setpoint 1	N/A
	HSP.2	xxx.x	Heating Setpoint 2	N/A
	HRV1	xx.x	Current No Reset Val	N/A
	HRV2	xx.x	Current Full Reset Val	N/A
	HRT1	xxx.x	Delta T No Reset Temp	N/A
	HRT2	xxx.x	Delta T Full Reset Temp	N/A
	HRO1	xxx.x	OAT No Reset Temp	N/A
	HRO2	xxx.x	OAT Full Reset Temp	N/A
	DGRH	xx.x	Degrees Heat Reset	N/A
	HAUT	xx.x	Heat Changeover Setpt	N/A
	HRMP	x.x	Heat Ramp Loading	N/A
MISC	DLS1	xxx	Switch Limit Setpoint 1	
	DLS2	xxx	Switch Limit Setpoint 2	
	DLS3	xxx	Switch Limit Setpoint 3	
	RSP	xxx.x	Heat Reclaim Setpoint	N/A
	RDB	xx.x	Reclaim Deadband	N/A

MODE — OPERATING MODE

SUB-MODE	ITEM	DISPLAY	ITEM EXPANSION	ENTRY
SLCT	OPER	x	Operating Control Type	
	SP.SE	x	Setpoint Select	
	HC.SE	x	Heat Cool Select	
	RL.SE	x	Reclaim Select	

Component Test — Complete the following tests to make sure all peripheral components are operational before the compressors are started.

MODE — SERVICE TEST

SUB-MODE	ITEM	DISPLAY	ITEM EXPANSION	ENTRY
TEST*	T.REQ	OFF/ON	Manual Sequence	
	CP.A1	OFF/ON	Compressor A1 Output	
	CP.A2	OFF/ON	Compressor A2 Output	
	CP.A3	OFF/ON	Compressor A3 Output	
	CP.A4	OFF/ON	Compressor A4 Output	
	HGB.A	OFF/ON	Hot Gas Bypass A Output	
	CP.B1	OFF/ON	Compressor B1 Output	
	CP.B2	OFF/ON	Compressor B2 Output	
	CP.B3	OFF/ON	Compressor B3 Output	
	CP.B4	OFF/ON	Compressor B4 Output	
	HGB.B	OFF/ON	Hot Gas Bypass B Output	
	CP.C1	OFF/ON	Compressor C1 Output	
	CP.C2	OFF/ON	Compressor C2 Output	
	CP.C3	OFF/ON	Compressor C3 Output	
	CP.C4	OFF/ON	Compressor C4 Output	
	HGB.C	OFF/ON	Hot Gas Bypass C Output	
QUIC†	Q.REQ	OFF/ON	Quick Test Mode	
	EXV.A	xxx%	Circuit A EXV % Open	
	EXV.B	xxx%	Circuit B EXV % Open	
	EXV.C	xxx%	Circuit C EXV % Open	
	FAN.A	X	Circuit A Fan Stages	
	FAN.B	X	Circuit B Fan Stages	
	FAN.C	X	Circuit C Fan Stages	
	SPD.A	xxx%	Circ A Varifan Position	
	SPD.B	xxx%	Circ B Varifan Position	
	SPD.C	xxx%	Circ C Varifan Position	
	FRV.A	OPEN/CLSE	Free Cooling Valve A	
	FRP.A	OFF/ON	Refrigerant Pump Out A	
	FRV.B	OPEN/CLSE	Free Cooling Valve B	
	FRP.B	OFF/ON	Refrigerant Pump Out B	
	FRV.C	OPEN/CLSE	Free Cooling Valve C	
	FRP.C	OFF/ON	Refrigerant Pump Out C	
	RV.A	OPEN/CLSE	4 Way Valve Circuit A	
	RV.B	OPEN/CLSE	4 Way Valve Circuit B	
	BOIL	OFF/ON	Boiler Command	
	HR1.A	OPEN/CLSE	Air Cond Enter Valve A	
	HR2.A	OPEN/CLSE	Air Cond Leaving Valve A	
	HR3.A	OPEN/CLSE	Water Cond Enter Valve A	
	HR4.A	OPEN/CLSE	Water Cond Leaving Valve A	
	HR1.B	OPEN/CLSE	Air Cond Enter Valve B	
	HR2.B	OPEN/CLSE	Air Cond Leaving Valve B	
	HR3.B	OPEN/CLSE	Water Cond Enter Valve B	
	HR4.B	OPEN/CLSE	Water Cond Leaving Valve B	
	PMP.1	OFF/ON	Water Exchanger Pump 1	
	PMP.2	OFF/ON	Water Exchanger Pump 2	
	CND.P	OFF/ON	Reclaim Condenser Pump	
	CL.HT	OFF/ON	Cooler Heater Output	
	CP.HT	OFF/ON	Condenser Heater Output	

*Place the Enable/Off/Remote Contact switch to the Off position prior to configuring ***T.REQ*** to ON. Configure the desired item to ON, then place the Enable/Off/Remote Contact switch to the Enable position.

†Place the Enable/Off/Remote Contact switch to the Off position prior to configuring ***Q.REQ*** to ON. The switch should be in the Off position to perform Quick Test.

CUT ALONG DOTTED LINE

CUT ALONG DOTTED LINE

MODE — SERVICE TEST (cont)

SUB-MODE	ITEM	DISPLAY	ITEM EXPANSION	ENTRY
QUIC†(cont)	CH.A1	OFF/ON	Compressor A1 Heater	
	CH.A2	OFF/ON	Compressor A2 Heater	
	CH.A3	OFF/ON	Compressor A3 Heater	
	CH.A4	OFF/ON	Compressor A4 Heater	
	CH.B1	OFF/ON	Compressor B1 Heater	
	CH.B2	OFF/ON	Compressor B2 Heater	
	CH.B3	OFF/ON	Compressor B3 Heater	
	CH.B4	OFF/ON	Compressor B4 Heater	
	CH.C1	OFF/ON	Compressor C1 Heater	
	CH.C2	OFF/ON	Compressor C2 Heater	
	CH.C3	OFF/ON	Compressor C3 Heater	
	CH.C4	OFF/ON	Compressor C4 Heater	
	HGB.A	OFF/ON	Hot Gas Bypass A Output	
	HGB.B	OFF/ON	Hot Gas Bypass B Output	
	HGB.C	OFF/ON	Hot Gas Bypass C Output	
	Q.RDY	OFF/ON	Chiller Ready Status	
	Q.RUN	OFF/ON	Chiller Running Status	
	SHUT	OFF/ON	Customer Shut Down Stat	
	CATO	xx.x	Chiller Capacity 0-10v	
	ALRM	OFF/ON	Alarm Relay	
	ALRT	OFF/ON	Alert Relay	
	C.ALM	OFF/ON	Critical Alarm Relay	

*Place the Enable/Off/Remote Contact switch to the Off position prior to configuring ***T.REQ*** to ON. Configure the desired item to ON, then place the Enable/Off/Remote Contact switch to the Enable position.

†Place the Enable/Off/Remote Contact switch to the Off position prior to configuring ***Q.REQ*** to ON. The switch should be in the Off position to perform Quick Test.

Operating Data:

Record the following information from the Run Status, Temperatures and Outputs Modes when machine is in a stable operating condition. If cooling load is insufficient, these readings must be obtained by putting the chiller in test mode (Service Test) and running each compressor.

TEMPERATURES

COOLER ENTERING FLUID	EWT _____	
COOLER LEAVING FLUID	LWT _____	
CONTROL POINT	CTPT _____	
CAPACITY	CAP _____	
OUTSIDE AIR TEMPERATURE	OAT _____	
LEAD/LAG LEAVING FLUID	CHWS_____	(Dual Chiller Control Only)

OPTIONAL HEAT RECLAIM

ENTERING WATER TEMPERATURE	HEWT _____
LEAVING WATER TEMPERATURE	HLWT _____

Install a manifold gage set to obtain readings and verify these against pressure transducers.

CIRCUIT A	CIRCUIT B	CIRCUIT C
SCT.A _____	SCT.B _____	SCT.C_____
SST.A _____	SST.B _____	SST.C _____
SGT.A _____	SGT.B _____	SGT.C _____
SUP.A _____	SUP.B _____	SUP.C _____
EXV.A_____	EXV.B _____	EXV.C _____

NOTE: EXV A,B,C positions are found in the output mode.

COMPRESSOR MOTOR CURRENT

	L1	L2	L3
COMPRESSOR A1	_____	_____	_____
COMPRESSOR A2	_____	_____	_____
COMPRESSOR A3	_____	_____	_____
COMPRESSOR A4	_____	_____	_____
COMPRESSOR B1	_____	_____	_____
COMPRESSOR B2	_____	_____	_____
COMPRESSOR B3	_____	_____	_____
COMPRESSOR B4	_____	_____	_____
COMPRESSOR C1	_____	_____	_____
COMPRESSOR C2	_____	_____	_____
COMPRESSOR C3	_____	_____	_____
COMPRESSOR C4	_____	_____	_____

CONDENSER FAN MOTOR CURRENT

	L1	L2	L3		L1	L2	L3
FAN MOTOR 1	_____	_____	_____	FAN MOTOR 10	_____	_____	_____
FAN MOTOR 2	_____	_____	_____	FAN MOTOR 11	_____	_____	_____
FAN MOTOR 3	_____	_____	_____	FAN MOTOR 12	_____	_____	_____
FAN MOTOR 4	_____	_____	_____	FAN MOTOR 13	_____	_____	_____
FAN MOTOR 5	_____	_____	_____	FAN MOTOR 14	_____	_____	_____
FAN MOTOR 6	_____	_____	_____	FAN MOTOR 15	_____	_____	_____
FAN MOTOR 7	_____	_____	_____	FAN MOTOR 16	_____	_____	_____
FAN MOTOR 8	_____	_____	_____	FAN MOTOR 17	_____	_____	_____
FAN MOTOR 9	_____	_____	_____	FAN MOTOR 18	_____	_____	_____

CUT ALONG DOTTED LINE

CUT ALONG DOTTED LINE

COMMENTS:

SIGNATURES:

Start-up
Technician _____ Date _____

Customer
Representative _____ Date _____

CUT ALONG DOTTED LINE

CUT ALONG DOTTED LINE

Copyright 2011 Carrier Corporation

Manufacturer reserves the right to discontinue, or change at any time, specifications or designs without notice and without incurring obligations.