Backdrop Displays & Tube Frames

FREE STANDING/ STEP & REPEAT/ SNAP FASTENER SYSTEM/ PILLOWCASE FABRIC

BACKDROP DISPLAYS

Our most popular display units start with the background story. The classic step & repeat is fit for parties and most special events. Choose your backdrop based on your vision.

Fondale 12 - Up to 12ft High

The Fondale 12 creates a larger, more dramatic Step & Repeat backdrop for special events. The unit measures 12' vertically and horizontally. To provide extra stability, the feet are fortified and a center vertical pole is included.

NEW AND IMPROVED

- Deluxe Quality Poles with a Diameter of 1.5"
- Aluminum Frame with a Black Oxidized Finish
- Graphic Options include 2 Pockets, 4 Pockets or Corner Grommets
- Adjustable Vertically (up to 12 ft High) and Horizontally
- Heavy Duty Cross Base
- Canvas Bag included

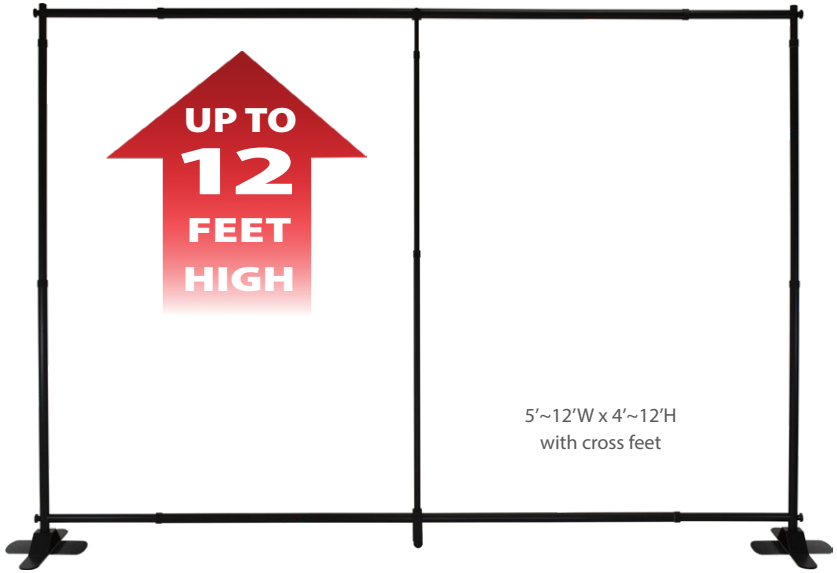

Item No.	Qty./Carton	Carton Weight	Carton Dimensions	Graphic Size
BT-FONDALE12-BLK	1	30 Lbs.	15" x 5" x 40"	(5'~12')W x (4'~12)H

Fondale 10 - Classic Step & Repeat

Our Fondale Step and Repeat backdrop is the classic background display. This frame is adjustable both vertically and horizontally. All components of this design are made of durable aluminum and comes with the option of a 2 ft. extension kit.

- Deluxe Quality Poles with a Diameter of 1.5"
- Aluminum Frame with a Black Oxidized Finish
- Graphic Options include 2 Pockets or Corner Grommets
- Adjustable Vertically and Horizontally
- Canvas Bag included
- Additional 2' wide Extension Kit available (ACC-FONDALE10-EXT)

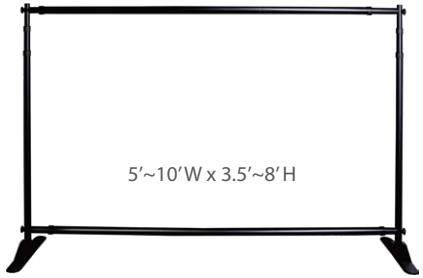

Item No.	Qty./Carton	Carton Weight	Carton Dimensions	Graphic Size
BT-FONDALE10-BLK	1	19 Lbs.	10" x 4" x 40"	(5'~10')W x (3.5'~8')H

Fondale Link - Link & Rotate (for Fondale 10 & 12)

Now introducing connecting solutions for the Fondale frame. Create a corner, extend or adjust display height with Fondale Link.

ACC-FONDALE-LINK
0.8 lb./set

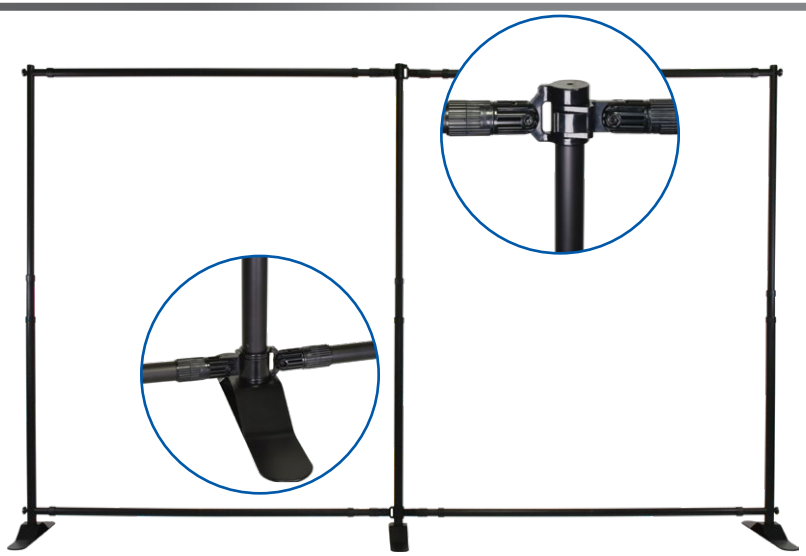

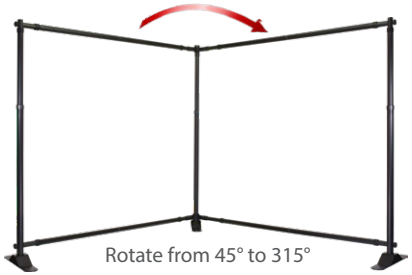

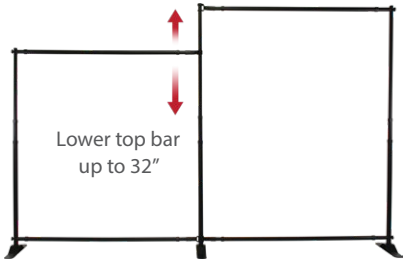

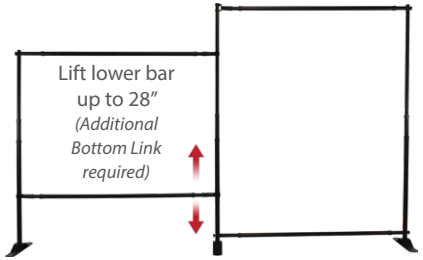

Fondale 10 Extension Kit - Extend 2ft in Width

- Extend the Fondale 10 with an additional 2ft. width per kit
- Includes a Middle Vertical Pole for added support
- Deluxe Quality Poles with a Diameter of 1.5"
- Canvas Bag included

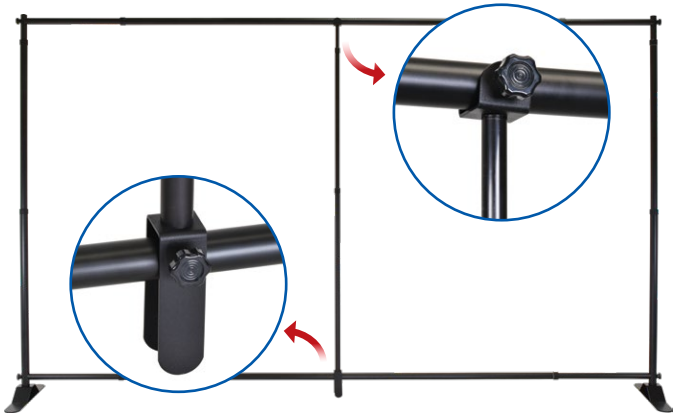

Item No.	Qty./Carton	Carton Weight	Carton Dimensions	Description
ACC-FONDALE10-EXT	1	5 Lbs.	6"x 2"x 40"	2 ft Extension w/ Support Pole

With the snap fastener system, the tube frames are one of the most user friendly display units in this industry. The clean appearance of the pillowcase tension fabric is what sets it apart from others.

Snello - Free Standing Tube Displays

Our Snello tension fabric tube stands are an alternative way of showcasing. It's built with a durable aluminum frame and comes in 4 appealing sizes.

- Black Powder Coated Steel Base
- Single or Double-sided Graphics
- Padded Canvas Bag included
- Shorten 27.3" by removing 1 pole section

26"W x 90.4"H x 10"D | 38"W x 90.4"H x 10"D | 50"W x 90.4"H x 10"D | 62"W x 90.4"H x 10"D

Optional LED Light
ACC-WT-LED

Optional Gray Hard Case
(See Page 54 for All Sizes)

L Wrench included

Solid Metal Base

Bottom Zipper Closure

Item No.	Qty./Carton	Carton Weight	Carton Dimensions	Graphic Size
BT-SNELLO-24	1	13 Lbs.	11" x 4" x 34"	25" x 89.84"
BT-SNELLO-36	1	17 Lbs.	11" x 4" x 38"	37" x 89.84"
BT-SNELLO-48	1	22 Lbs.	11" x 4" x 50"	49" x 89.84"
BT-SNELLO-60	1	26 Lbs.	11" x 4" x 63"	61" x 89.84"

Posa - Free Standing Tube Displays

The Posa stand is our designer frame with pillowcase graphics and tool free setup. This display is made of lightweight aluminum material constructed in a snap fastener system.

- Commonly Used in the Fashion and Hospitality Industries
- 2 Sturdy Steel Feet
- Easy to Transport & Store
- Single or Double-sided Graphics
- Padded Canvas Bag included

36″W x 89.70″H x 15.80″D

Optional LED Light
ACC-WT-LED

Item No.	Qty./Carton	Carton Weight	Carton Dimensions	Graphic Size
BT-POSA	1	11 Lbs.	8″ x 8″ x 33″	37″ x 94.49″

Serpe - Free Standing Tube Displays

The Serpe display is a sleek design resembling its smooth assembly and lightweight aluminum frame. This unit is easy to transport and is formed to have a leveled base without any footing.

- Unique Shape w/ a Durable Self-Sustaining Frame
- Commonly Used in the Health & Beauty Industries
- Easy to Transport & Store
- Single or Double-sided Graphics
- Padded Canvas Bag included

36.02″W x 89.76″H x 27.56″D

Optional LED Light
ACC-WT-LED

Item No.	Qty./Carton	Carton Weight	Carton Dimensions	Graphic Size
BT-SERPE	1	11 Lbs.	12″ x 6″ x 36″	37″ x 138.58″

Concavo - Tube Frame Backdrops

The snap fastener system brings the aluminum frame together for a professional look. The pillowcase fabric graphics enhance the shape and definition in your presentation.

- Available in 6', 8', 10' and 20'
- Durable Self-Sustaining Frame
- Single or Double-sided Graphics
- Choice of a Carry Bag included

Top View

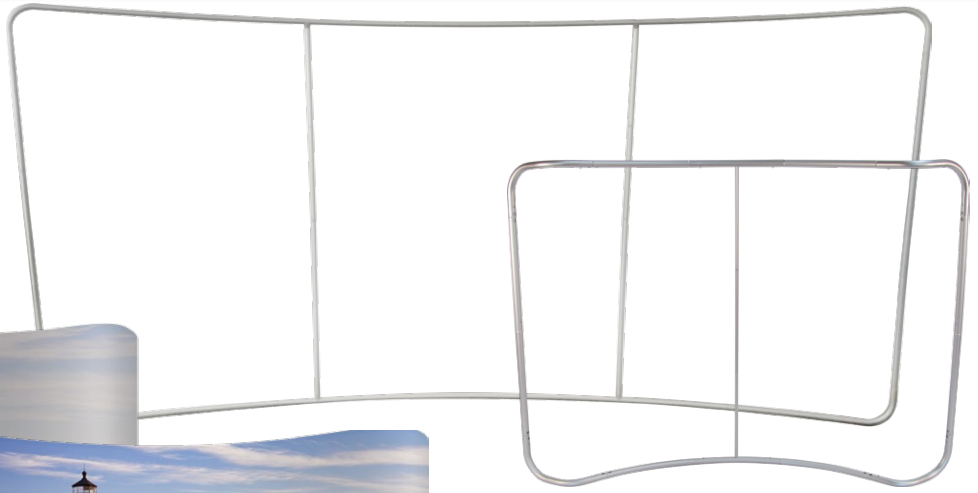

237.01"W x 88.98"H x 39.37"D

118.50"W x 88.98"H x 17.24"D

90.35"W x 88.98"H x 13.59"D

70.03" W x 60.24"H x 13.59"D

Tabletop Display

Optional LED Light
ACC-WT-LED

Optional Premium Hard Trolley Case
ACC-LUCID-HTC

Item No.	Qty./Carton	Carton Weight	Carton Dimensions	Graphic Size
BT-CONCAVO-6†	1	13 Lbs.	11"x 7"x 32"	77.95"x 60.24"
BT-CONCAVO-6E*	1	8 Lbs.	12"x 9"x 28"	77.95"x 60.24"
BT-CONCAVO-8†	1	20 Lbs.	13"x 7"x 52"	93.70"x 89.84"
BT-CONCAVO-8E*	1	10 Lbs.	11"x 9"x 29"	93.70"x 89.84"
BT-CONCAVO-10†	1	21 Lbs.	13"x 7"x 52"	122.83"x 89.84"
BT-CONCAVO-10E*	1	11 Lbs.	14"x 7"x 33"	122.83"x 89.84"
BT-CONCAVO-20†	1	37 Lbs.	16"x 17"x 39"	250"x 89.84"

†Hard Case & Accessories included. *Economy Version with Padded Canvas Bag.

†Accessories included

BT-CONCAVO-6†

BT-CONCAVO-8†
BT-CONCAVO-10†

Choice of Carry Bags

BT-CONCAVO-6E*
BT-CONCAVO-8E*
BT-CONCAVO-10E*

BT-Concavo-20†

Retto - Tube Frame Backdrops

The Retto is perfect for that crisp, clean looking background. Now available in 3 favored sizes, there are more options with that amazing pillowcase graphic presentation.

- Available in 8', 10' and 20'
- Upgraded Steel Support Footing
- Printed Pillowcase Graphics w/ Zipper
- Single or Double-sided Graphics
- Choice of a Carry Bag included

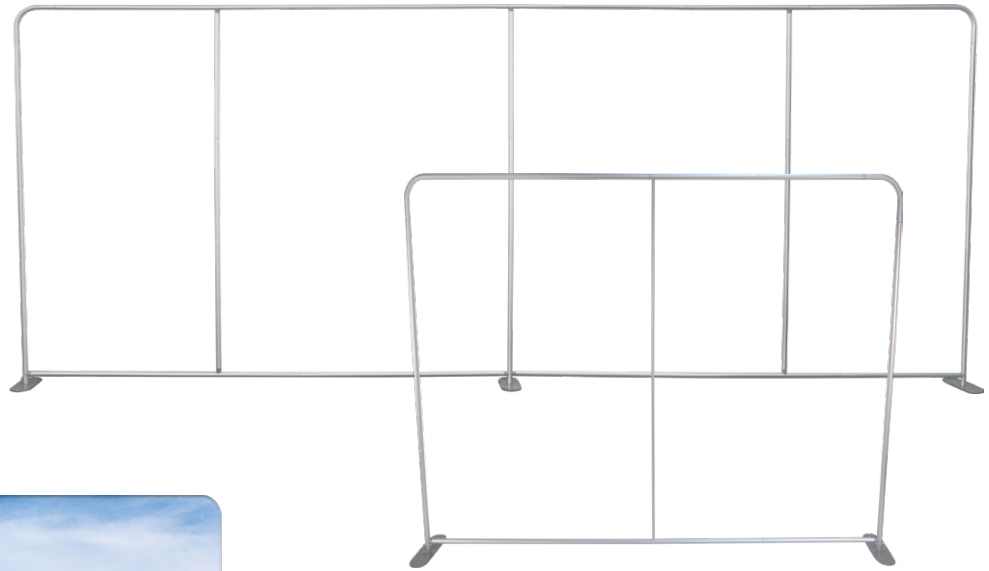

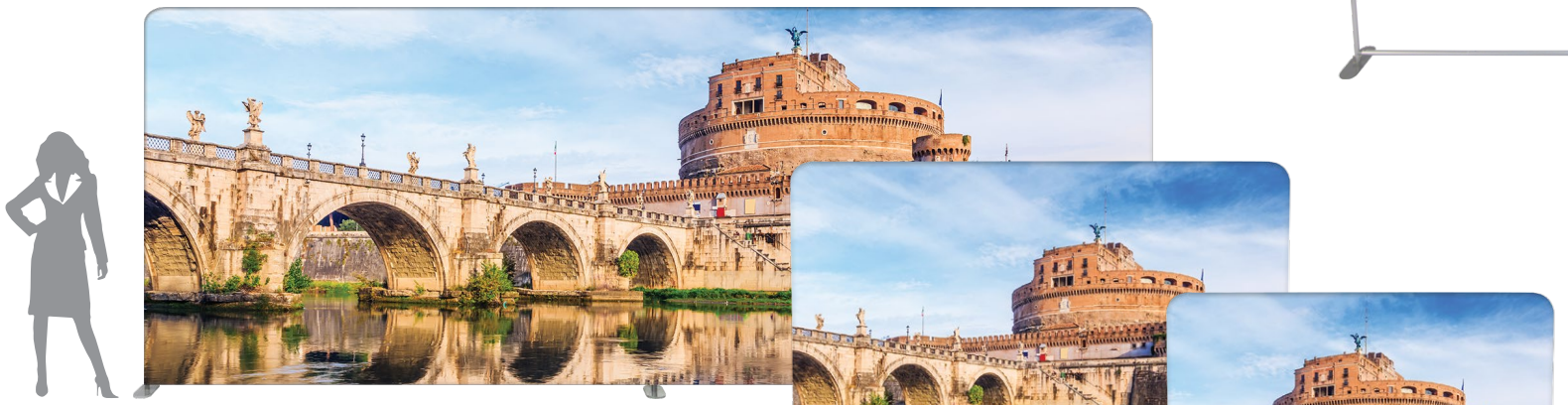

237.01" W x 88.98" H x 13.78" D

118.50" W x 88.98" H x 13.78" D

94.50" W x 88.98" H x 13.78" D

Optional LED Light
ACC-WT-LED

Optional Premium Hard Trolley Case
ACC-LUCID-HTC

Choice of Carry Bags

BT-RETTO-10†
†Accessories included

BT-RETTO-8E*
BT-RETTO-10E*

BT-RETTO-20†

Item No.	Qty./Carton	Carton Weight	Carton Dimensions	Graphic Size
BT-RETTO-8E*	1	17 Lbs.	12" x 6" x 32"	92.14" x 89.84"
BT-RETTO-10†	1	35 Lbs.	13" x 7" x 52"	116.14" x 89.84"
BT-RETTO-10E*	1	18 Lbs.	12" x 6" x 32"	116.14" x 89.84"
BT-RETTO-20†	1	60 Lbs.	16" x 17" x 39"	233.46" x 89.84"

†Hard Case & Accessories included. *Economy Version with Padded Canvas Bag.

Forma - Tube Frame Backdrops

Our 10ft Forma model comes from the concept of the Concavo. This wavy display presents a full layout that sets a blended tone to your presentation.

- Durable Self-Sustaining Frame
- Classic Trade Show Style Frame
- Single or Double-sided Graphics
- Choice of a Carry Bag included

Top View

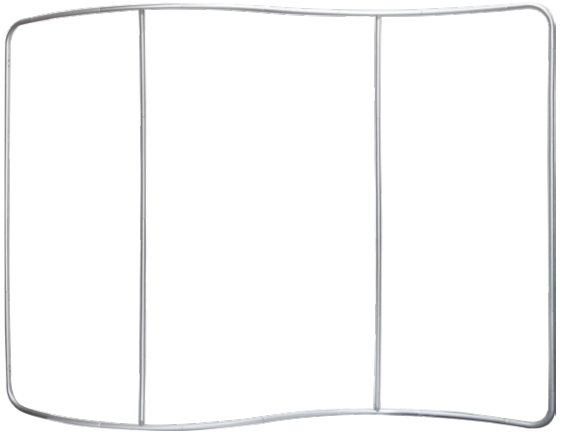

118.5″ W x 88.98″ H x 21.26″ D

Choice of Carry Bags

BT-FORMA-10†
BT-CURVA-10†

†Accessories included

BT-FORMA-10E*
BT-CURVA-10E*

Item No.	Qty./Carton	Carton Weight	Carton Dimensions	Graphic Size
BT-FORMA-10†	1	24 Lbs.	13″ x 9″ x 52″	125.19″ x 89.84″
BT-FORMA-10E*	1	14 Lbs.	12″ x 8″ x 30″	125.19″ x 89.84″

†Hard Case & Accessories included. *Economy Version with Padded Canvas Bag.

Curva - Tube Frame Backdrops

This easy to assemble and sturdy unit is made with lightweight aluminum and connects together with a snap fastener system. Add our optional LED lights to maximize its visibility.

- Professional & Sharp Frame Design
- Supported with 2 Heavy Duty Steel Plates
- Single or Double-sided Graphics
- Choice of a Carry Bag included

Side View

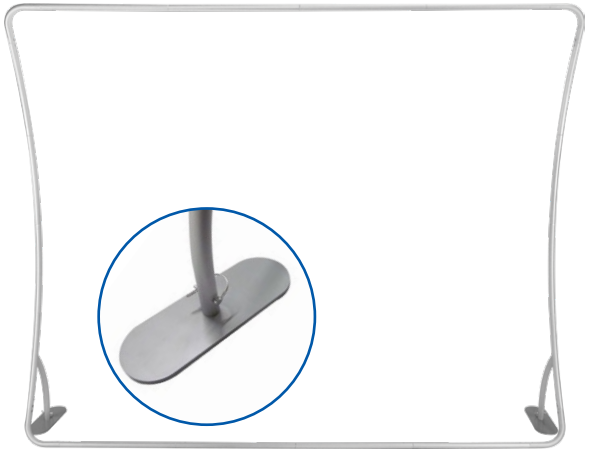

111.98″ W x 88.98″ H x 20″ D

Item No.	Qty./Carton	Carton Weight	Carton Dimensions	Graphic Size
BT-CURVA-10†	1	35 Lbs.	13″ x 7″ x 52″	108.27″ x 90.94″
BT-CURVA-10E*	1	18 Lbs.	17″ x 8″ x 30″	108.27″ x 90.94″

†Hard Case & Accessories included. *Economy Version with Padded Canvas Bag.