BUILDBLOCK CAD DETAILS

Table of Contents

1 6″ Straight Block 1
1A 4″ Straight Block 2
2 6″ Angle Blocks....3
2A 4″ Angle Blocks....4
3 8″ Straight Block 5
4 8″ Angle Blocks....6
4A 8″ Knockdown Straight Blocks 7
4B 10″ Knockdown Straight Blocks 8
4C 12″ Knockdown Straight Blocks 9
4D 10″ Knockdown 90° Corner Block 10
4E 12″ Knockdown 90° Corner Block 11
5 6″ Ledge Block 12
5A 8″ Ledge Block 13
5A1 8″ Ledge Block Stirrup Reinforcement....14
5A2 6″ Ledge Block Stirrup Reinforcement....15
5B 6″ Taper Top Block....16
5C 8″ Taper Top Block....17
5D BuildDeck 8″ 18
5E BuildDeck 10″ 19
5F BuildDeck 12″ 20
5G BuildDeck 12″ + 2″ Foam Top Hat 21
5H BuildDeck 12″ + 4″ Foam Top Hat 22
5I BuildDeck 12″ + 6″ Foam Top Hat 23
5J BuildDeck 12″ + 8″ Foam Top Hat 24
5K BuildDeck Long Span Stirrups 25
6 1-Story Brick Veneer 26
7 1-Story Stucco....27
8 1-Story Siding....28
9 Wood Frame on BuildBlock Stem 29
10 BuildBlock Stem & Crawl Space 30
11 BuildBlock Stem & Log Wall....31
11A BuildBlock Stem & Log Wall....32
12 BuildBlock Basement & Log Wall 33
12A Basement, Taper Unit & Log Wall 34
13 Basement With Brick 1 or 2 Story BuildBlock Above 35
13A Basement With Stucco 1 or 2 Stories Above 36
13B Wall Detail W/Sill Plate & Slope Roof....37
13C Basement With Siding on One Story BuildBlock and Second Floor Frame Above....38
13D Basement With 1 or 2 Story BuildBlock Above 39
14 BuildBlock 6″ Typical Floor Intersections....40
14A Frame Floor Top Bearing 41
14B BuildBlock 8″ Typical Floor Wall Intersections....42
15 Simpson ICF Connectors....43
15A Simpson ICF Connectors....44
15B Simpson ICF Connectors....45
15C Simpson ICF Connectors....46
15D Simpson ICF Connectors....47
15E Simpson ICF Connectors....48
15F Simpson ICF Connectors....49
16 BuildBlock 6″ Ledge Block Application 1....50
17 BuildBlock 8″ Ledge Block Application 2....51
18 BuildBlock 6″& 8″ Ledge Block Application 3....52
19 BuildBlock 6″ & 8″ Masonry Ledge Form Details 53
20 BuildBlock Basement Foundation 54
21 BuildBlock Basement & Wood Frame....55
22 Frame Sole Plate Intersection 56
23 Wood Frame Stucco on BuildBlock Basement 57
23A Wood Frame Stucco on BuildBlock Basement 58
23B Wood Frame Stucco on BuildBlock Crawl Space 59
23C Stucco on BuildBlock & Crawl Space 60
23D Siding on BuildBlock Crawl Space....61
23E Brick on BuildBlock Crawl Space....62
23F Wood Frame Stucco on BuildBlock Basement 63
24 BuildBlock on Piers 1....64
25 BuildBlock on Piers 2....65
26 BuildBlock on Piers 3....66
27 Detail of Stepped Footings....67
28 Horizontal Intersection 68
28A “T” Intersections....69
29 Load Hanging Details 70
30 Vertical Reinforcing....71
30A Reinforcement of Openings 72
30B Flat ICF Lintel & Stirrup Construction....73
31 Window Openings 74
32 Mechanical Installations 75
33 Sub-Grade Waterproofing 76
34 Metal Deck Composite Floors....77
35 Metal Deck & Steel Joists....78
36 Precast Hollow Core Floors....79
37 Beam Pocket....80
38 Parapets 81
39 Pilaster Detail 82
40 BuildBlock Radius Walls 83
41 8″ Ledgeblock Outside 90° Miter No. 1 84
41A 6″ Ledgeblock Outside 90° Miter No. 1 85
42 Ledgeblock Inside 90° Miter No. 1....86
42A 6″ Ledgeblock Inside 90° Miter No. 1 87
43 8″ Ledgeblock Outside 90° Miter No. 2 88
43A 6″ Ledgeblock Outside 90° Miter No. 2 89
44 Ledgeblock Inside 90° Miter No. 2....90
44A 6″ Ledgeblock Inside 90° Miter No. 2 91
45 Monolithic Footing / Slab With Stucco/EIFS 92
45A Monolithic Footing / Slab Siding 93
46 Monolithic Footing / Slab Brick/Masonry....94
47 Concrete Masonry Unit (CMU) Stemwall....95

BUILDBLOCK CAD DETAILS

48 8″ Ledgeblock 45° Outside Miter 96
49 8″ Ledgeblock 45° Inside Miter 97
50 6″ Ledgeblock 45° Inside Miter 98
51 6″ Ledgeblock 45° Outside Miter 99
52 Taper Unit & Core Slab 100
53 Taper Unit & Ledge Connection 1 101
54 Taper Unit & Ledge Connection 2 102
55 Taper Unit & Ledge Connection 3 103
55A Basement W/ BuildBlock Above & Side Bearing Floor W/ Tapertop 104
55B Basement W/ BuildBlock Above & Side Bearing Floor 105
55C Floor ICF Wall Connection In Seismic Zone D & Townhouse Zone C. ICF. Above 106
55D Floor ICF Wall Connection In Seismic Zone D & Townhouse Zone C. Frame Above 107
56 BuildDeck Floor & Wall Top Bearing 108
57 BuildDeck Floor Intersection 109
58A Brickledge 8″ Ledge Block BB-8BL to BuildBlock BB-800 110
58B Brickledge 8″ Ledge Block BB-8BL to BuildBlock BB-600 111
58C Brickledge 6″ Ledge Block BB-8BL to BuildBlock BB-600 112
59A BB-400/BL-400 90° Field Fabricated Corner 113
59B BB-445/BL-445 45° Field Fabricated Corner 114
59C BB-600/BL-600 90° Field Fabricated Corner 115
59D BB-645/BL-645 45° Field Fabricated Corner 116
59E BB-800/BL-800 90° Field Fabricated Corner 117
59F BB-845/BL-845 45° Field Fabricated Corner 118
59G BB-1000/BL-1000 90° Field Fabricated Corner 119
59H BB-1045/BL-1045 45° Field Fabricated Corner 120
59I BB-1200/BL-1200 90° Field Fabricated Corner 121
59J BB-1245/BL-1245 45° Field Fabricated Corner 122
60A GlobalBlock All Foam ICF 3″ Straight Block 123
60B GlobalBlock All Foam ICF 3″ 90° Corner Block 124
60C GlobalBlock All Foam ICF 4″ Straight Block 125
60D GlobalBlock All Foam ICF 4″ 90° Corner Block 126
60E GlobalBlock All Foam ICF 6″ Straight Block 127
60F GlobalBlock All Foam ICF 6″ 90° Corner Block 128
60G GlobalBlock All Foam ICF 8″ Straight Block 129
60H GlobalBlock All Foam ICF 8″ 90° Corner Block 130
60I GlobalBlock Web Inserts Detail 131
60J GlobalBlock Rebar Saddle Detail 132
60K GlobalBlock Combined Reinforcement Options 133
60L GlobalBlock Using Plastic Web Inserts 134
60M GlobalBlock Using Rebar Pins 135
60N GlobalBlock Using Rebar Saddles 136
61A Thermalsert Product Detail 137
61B Thermalsert Kd Product Detail 138
62A BuildBuck 6" Product Dimensions 139
62B BuildBuck 8" Product Dimensions 140
62C BuildBuck Product Features 141
62D BuildBuck Cross Sections BK-600/BK-800 142
62E BuildBuck Connection Detail 143
62F BuildBuck Assembly and Bracing 144
62G BuildBuck Bracing Recommendations 145
62H BuildBuck Window Mounting Recommendations 146
62I BuildBuck Door Installation Detail 147
63A BuildShield Product Detail 148
63B BuildShield Termite Installation 149
63C BuildShield Corner Form Modification 150
63D BuildShield Firestop Installation 151
63E BuildShield Firestop Concrete Floor System 152
63F BuildShield Firestop with Wood/Metal Floor System 153
64A BuildBlock HardWall Product Detail 154
64B BuildBlock HardWall Connector Detail 155
64C BuildBlock HardWall Assembly 156
64D BuildBlock HardWall Form Template 157
64E BuildBlock HardWall Finishing 158
64F BuildBlock HardWall Alternative Application 159
64G BuildBlock HardWall Form Template Full Size 160
65A BuildRadius 2-Foot arc Radius Product Detail 161
65B BuildRadius 4-Foot arc Radius Product Detail 162
65C BuildRadius 8-Foot arc Radius Product Detail 163
65D BuildRadius 12-Foot arc Radius Product Detail 164
65E BuildRadius 16-Foot arc Radius Product Detail 165
65F BuildRadius 20-Foot arc Radius Product Detail 166
65G Build Radius Wall Intersections 167
66A 2± Inch Deep Concrete Void Repair 168
66B 4± Inch Deep Concrete Void Repair 169
66C 6± Inch Deep Concrete Void Repair 170

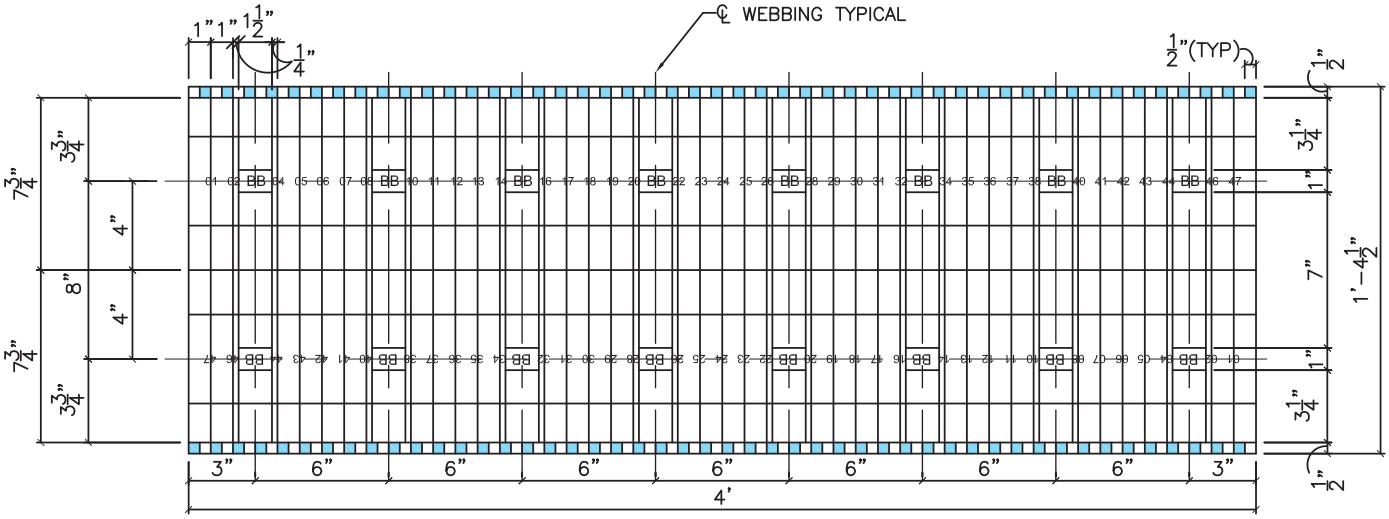

NOTE:
* FORM IS REVERSIBLE BOTH VERTICALLY AND HORIZONTALLY
* BLOCKS STACK @1'-4" (16") INCREMENTS

3/01 FRONT VIEW
SCALE: 1 1/2" = 1'-0"

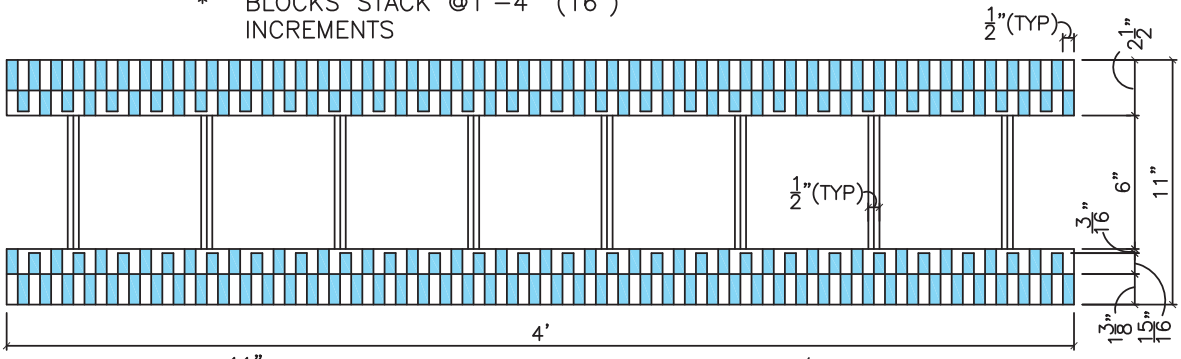

TOP/BOTTOM VIEW (REVERSIBLE)
2/01
SCALE: 1 1/2" = 1'-0"

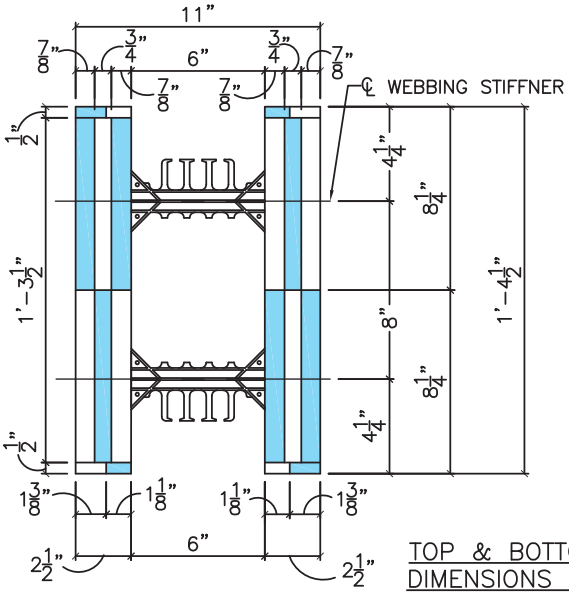

TOP & BOTTOM DIMENSIONS EQUAL

1/01 SIDE VIEW
SCALE: 1 1/2" = 1'-0"

LEGEND
■ = POSITIVE PROFILES (TONGUES)
□ = NEGATIVE PROFILES (GROOVES)

NOTE:
DUE TO VARIATIONS IN SELECTED PRINTER SETTINGS, NOTED SCALES MAY NO LONGER BE APPLICABLE

BuildBlock® BUILDING SYSTEMS

9705 N. BROADWAY EXTENSION, SUITE 200, OKLAHOMA CITY, OK 73114
OFFICE: 405-840-3386 | TOLL FREE: 866-222-2575 | FAX: 831-597-0792
BUILDBLOCK.COM

6" STRAIGHT BLOCK

DATE/REV	2-2-17 /3	SCALE	NTS	DETAIL SHEET
NOTES				1

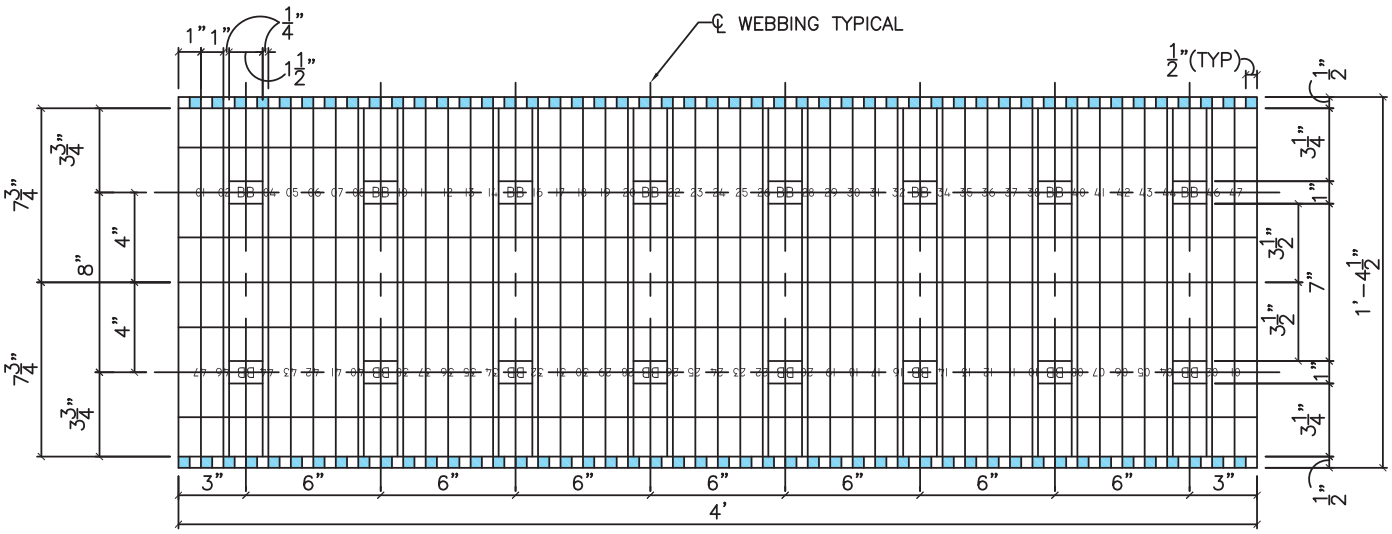

NOTE:
* FORM IS REVERSIBLE BOTH VERTICALLY AND HORIZONTALLY
* BLOCKS STACK @1'-4" (16") INCREMENTS

3 / 01a FRONT VIEW
SCALE: 1 1/2" = 1'-0"

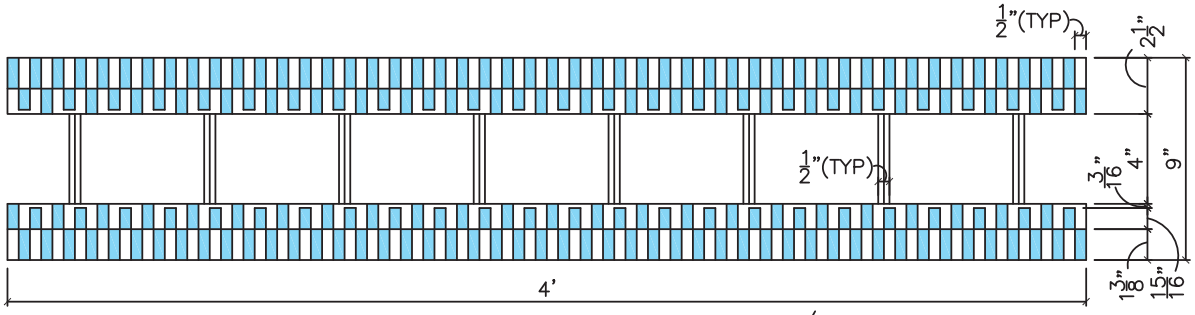

2 / 01a TOP/BOTTOM VIEW (REVERSIBLE)
SCALE: 1 1/2" = 1'-0"

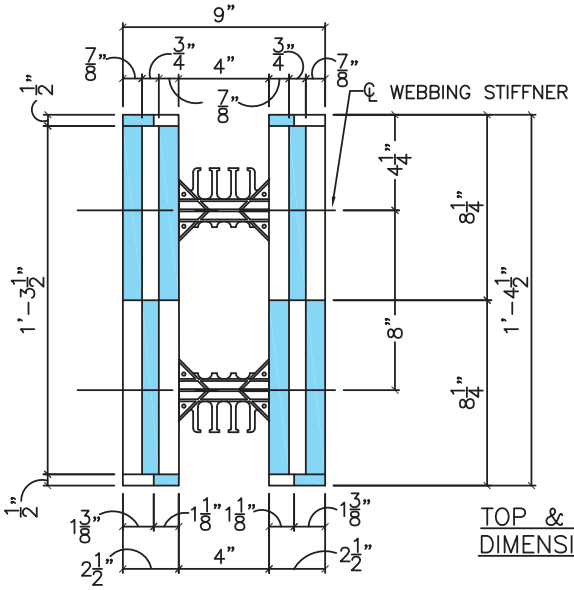

1 / 01a SIDE VIEW
SCALE: 1 1/2" = 1'-0"

TOP & BOTTOM DIMENSIONS EQUAL

LEGEND
■ = POSITIVE PROFILES (TONGUES)
□ = NEGATIVE PROFILES (GROOVES)

NOTE:
DUE TO VARIATIONS IN SELECTED PRINTER SETTINGS, NOTED SCALES MAY NO LONGER BE APPLICABLE

BuildBlock BUILDING SYSTEMS

9705 N. BROADWAY EXTENSION, SUITE 200, OKLAHOMA CITY, OK 73114
OFFICE: 405-840-3386 | TOLL FREE: 866-222-2575 | FAX: 831-597-0792
BUILDBLOCK.COM

4" STRAIGHT BLOCK

DATE/REV	2-2-17 /3	SCALE	NTS	DETAIL SHEET
NOTES				1A

CONSTRUCTION SHALL BE IN ACCORDANCE WITH ALL APPLICABLE LOCAL AND NATIONAL CODES. ALL DRAWINGS ARE SUBJECT TO CHANGE WITHOUT NOTICE.

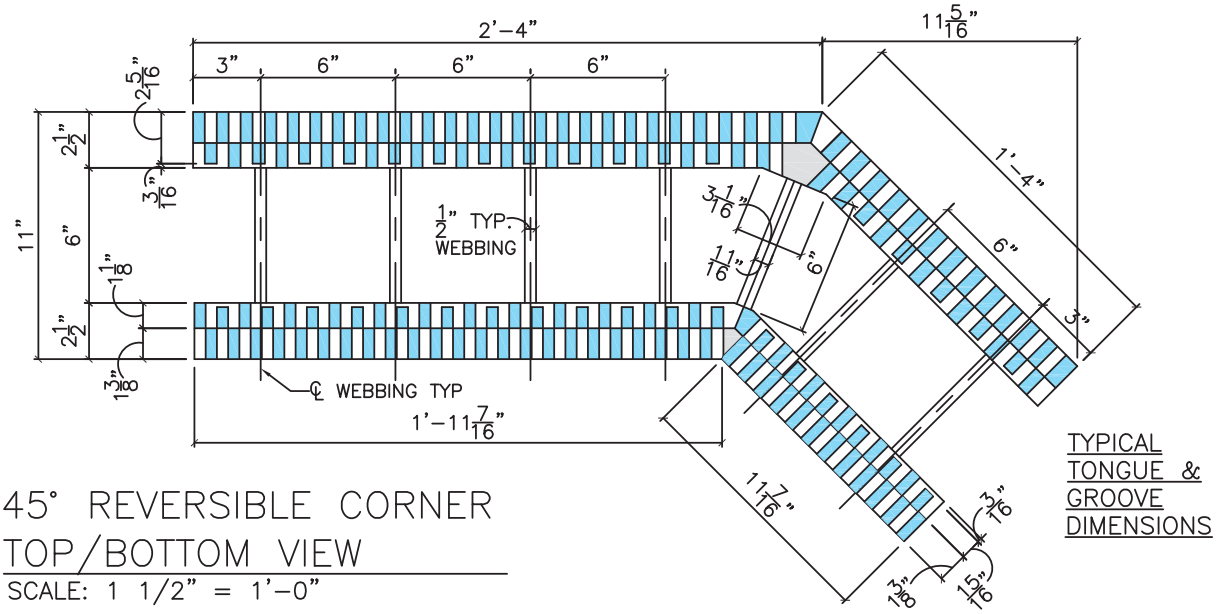

TYPICAL TONGUE & GROOVE DIMENSIONS

45° REVERSIBLE CORNER TOP/BOTTOM VIEW

2/02

SCALE: 1 1/2" = 1'–0"

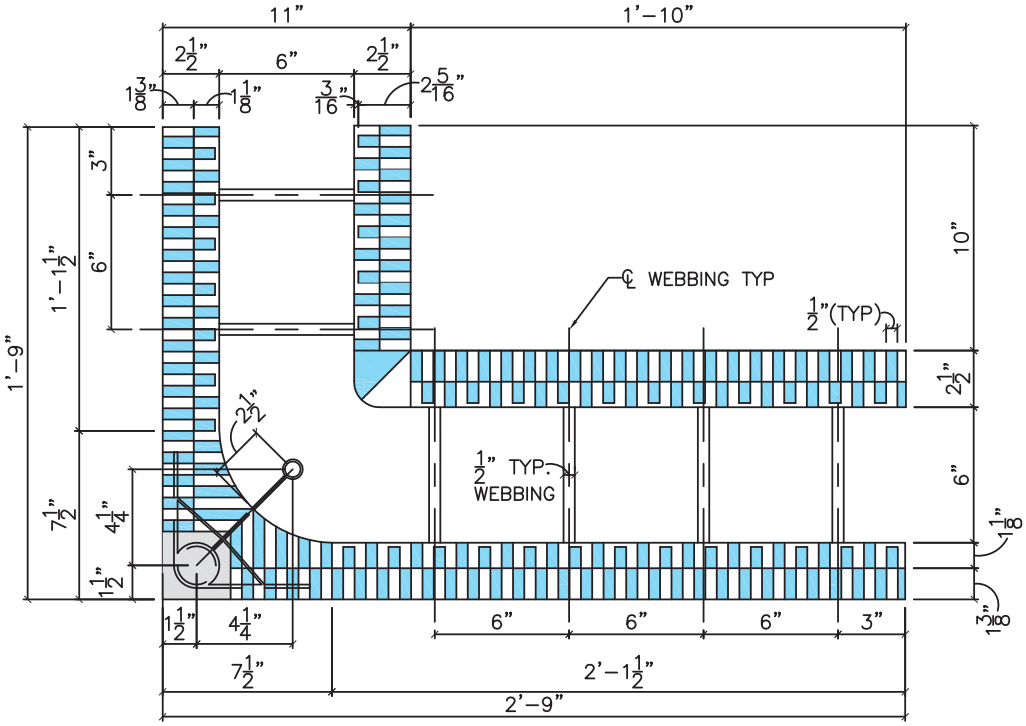

TYPICAL TONGUE & GROOVE DIMENSIONS

90° REVERSIBLE CORNER TOP/BOTTOM VIEW

1/02

SCALE: 1 1/2" = 1'–0"

LEGEND

- ■ = POSITIVE PROFILES (TONGUES)
- ▒ = 1/2 HEIGHT POSITIVE PROFILES
- □ = NEGATIVE PROFILES (GROOVES)

REFER TO DETAIL SHEET 01a FOR TYPICAL END VIEW (SIM.)

NOTE:
DUE TO VARIATIONS IN SELECTED PRINTER SETTINGS, NOTED SCALES MAY NO LONGER BE APPLICABLE

BuildBlock® BUILDING SYSTEMS

9705 N. BROADWAY EXTENSION, SUITE 200, OKLAHOMA CITY, OK 73114
OFFICE: 405-840-3386 | TOLL FREE: 866-222-2575 | FAX: 831-597-0792
BUILDBLOCK.COM

6" ANGLE BLOCKS

DATE/REV	2-2-17 /3	SCALE	NTS	DETAIL SHEET
NOTES				2

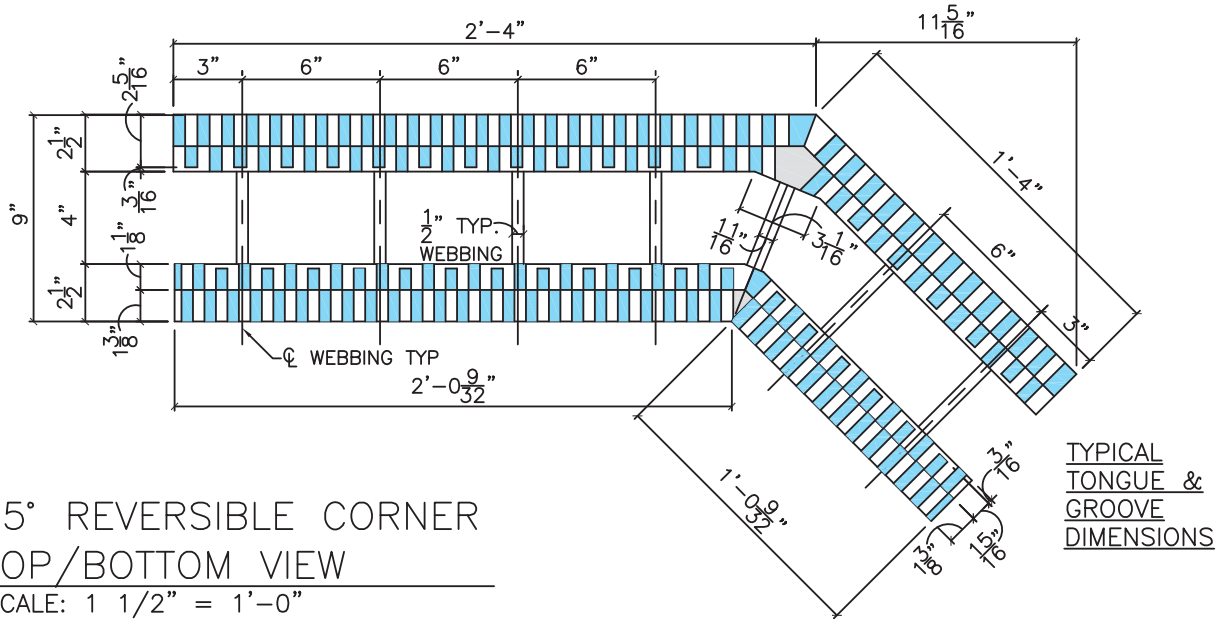

45° REVERSIBLE CORNER TOP/BOTTOM VIEW

2 / 02a

SCALE: 1 1/2" = 1'–0"

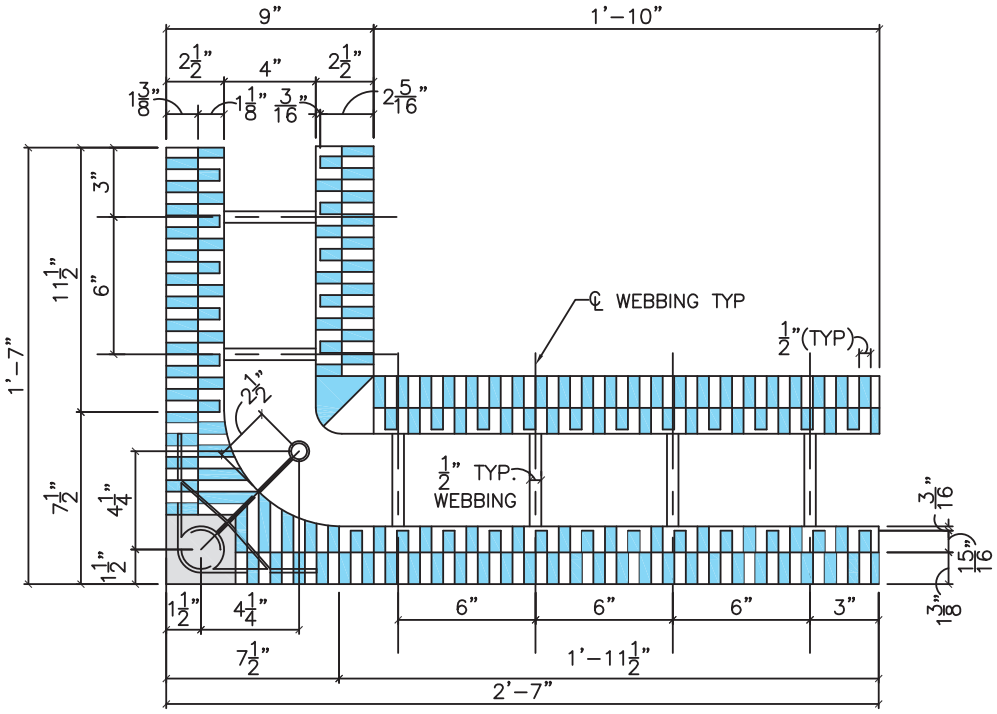

90° REVERSIBLE CORNER TOP/BOTTOM VIEW

1 / 02a

SCALE: 1 1/2" = 1'–0"

LEGEND

- ■ = POSITIVE PROFILES (TONGUES)
- ■ = 1/2 HEIGHT POSITIVE PROFILES
- □ = NEGATIVE PROFILES (GROOVES)

REFER TO DETAIL SHEET 01a FOR TYPICAL END VIEW (SIM.)

NOTE:
DUE TO VARIATIONS IN SELECTED PRINTER SETTINGS, NOTED SCALES MAY NO LONGER BE APPLICABLE

BuildBlock® BUILDING SYSTEMS

9705 N. BROADWAY EXTENSION, SUITE 200, OKLAHOMA CITY, OK 73114
OFFICE: 405-840-3386 | TOLL FREE: 866-222-2575 | FAX: 831-597-0792
BUILDBLOCK.COM

4" ANGLE BLOCKS				
DATE/REV	2-2-17 /3	SCALE	NTS	DETAIL SHEET
NOTES				2A

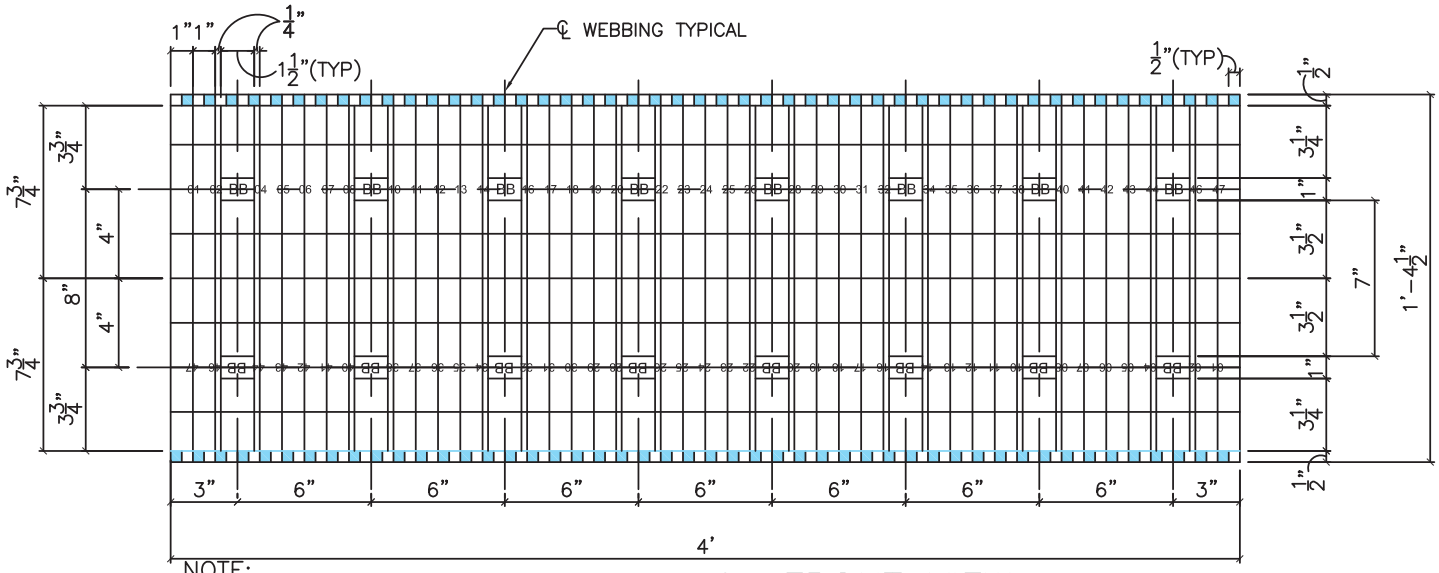

NOTE:
* FORM IS REVERSIBLE BOTH VERTICALLY AND HORIZONTALLY
* BLOCKS STACK @1'-4" (16") INCREMENTS

3/03 FRONT VIEW
SCALE: 1 1/2" = 1'-0"

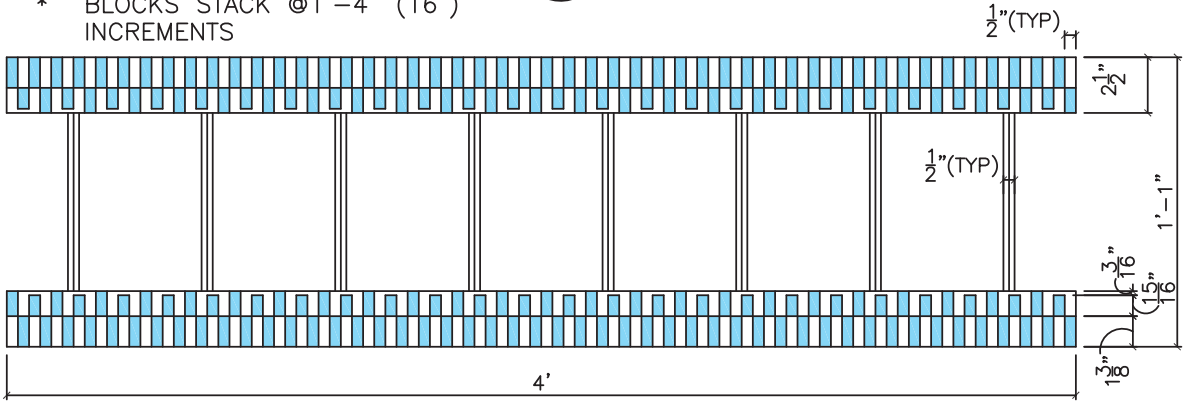

2/03 TOP/BOTTOM VIEW (REVERSIBLE)
SCALE: 1 1/2" = 1'-0"

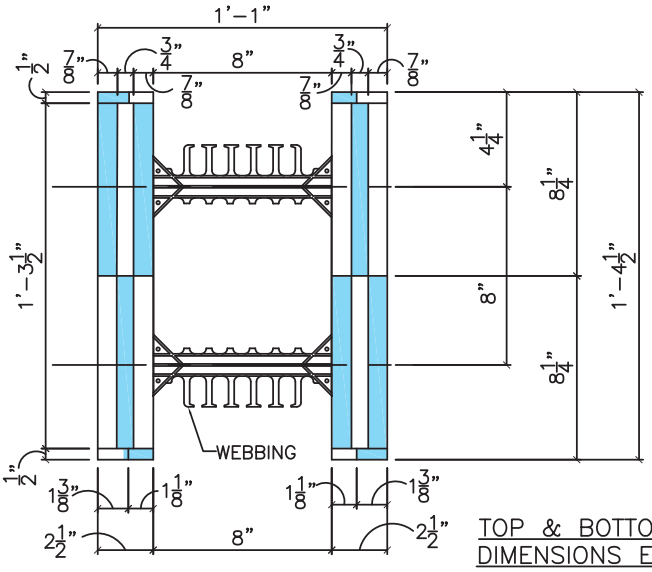

TOP & BOTTOM DIMENSIONS EQUAL

1/03 SIDE VIEW
SCALE: 1 1/2" = 1'-0"

LEGEND

= POSITIVE PROFILES (TONGUES)

= NEGATIVE PROFILES (GROOVES)

NOTE:
DUE TO VARIATIONS IN SELECTED PRINTER SETTINGS, NOTED SCALES MAY NO LONGER BE APPLICABLE

BuildBlock® BUILDING SYSTEMS

9705 N. BROADWAY EXTENSION, SUITE 200, OKLAHOMA CITY, OK 73114
OFFICE: 405-840-3386 | TOLL FREE: 866-222-2575 | FAX: 831-597-0792
BUILDBLOCK.COM

8" STRAIGHT BLOCK

DATE/REV	2-2-17 /3	SCALE	NTS	DETAIL SHEET
NOTES				3

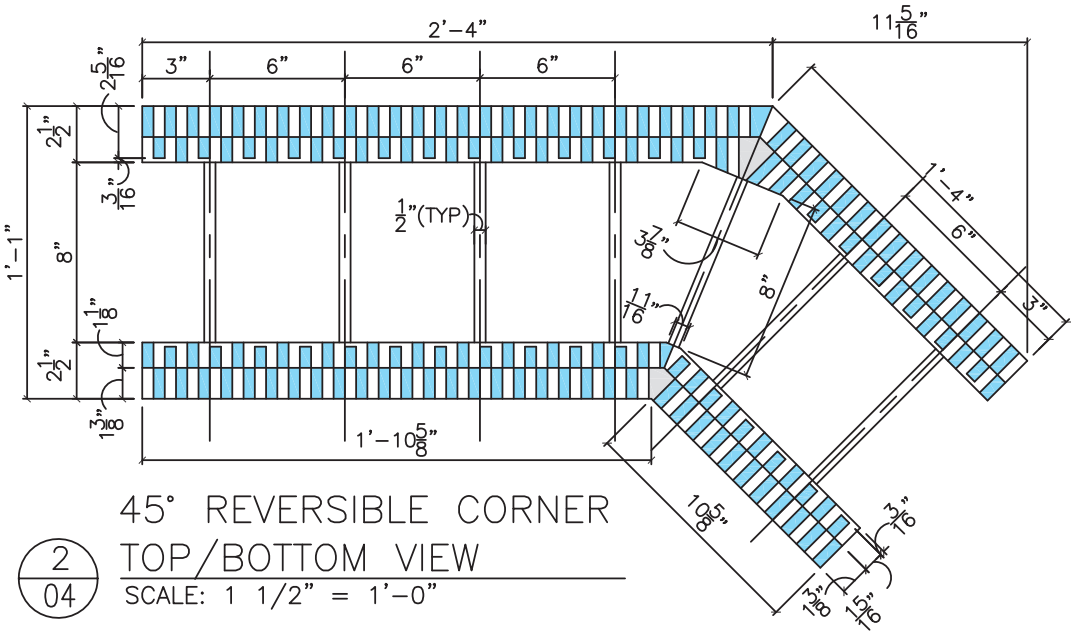

45° REVERSIBLE CORNER
TOP/BOTTOM VIEW
2/04
SCALE: 1 1/2" = 1'–0"

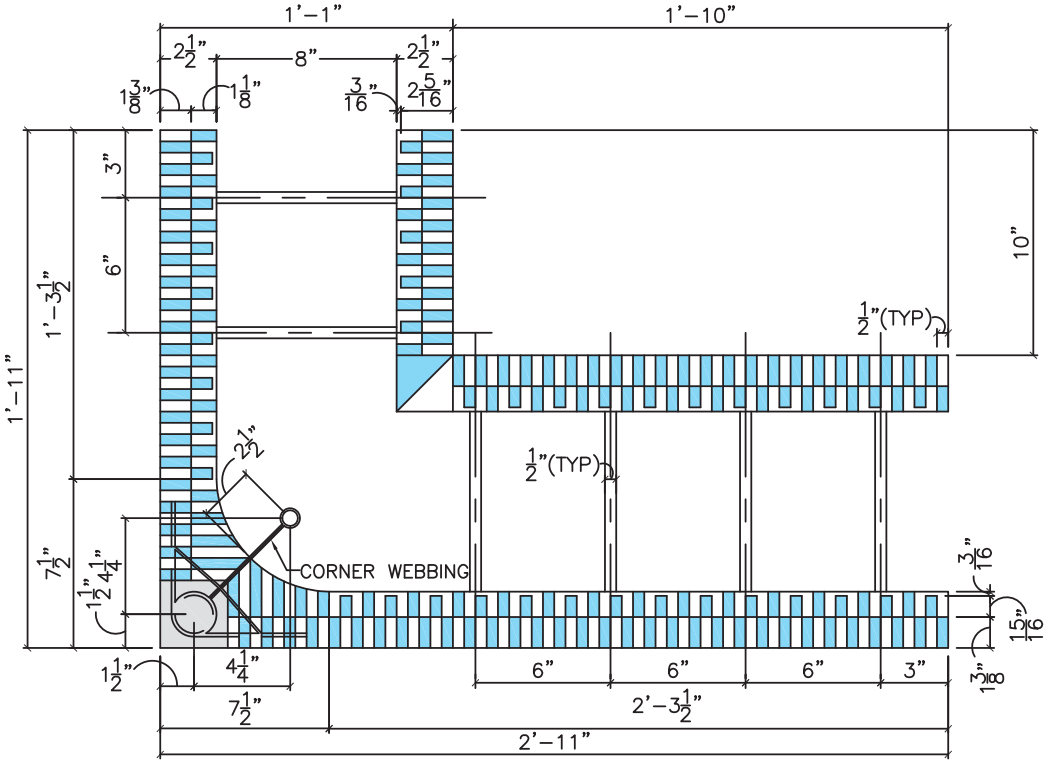

TYPICAL TONGUE & GROOVE DIMENSIONS

90° REVERSIBLE CORNER
TOP/BOTTOM VIEW
1/04
SCALE: 1 1/2" = 1'–0"

LEGEND

- = POSITIVE PROFILES (TONGUES)
- = 1/2 HEIGHT POSITIVE PROFILES
- = NEGATIVE PROFILES (GROOVES)

REFER TO DETAIL SHEET 01 FOR TYPICAL END VIEW (SIM.)

NOTE:
DUE TO VARIATIONS IN SELECTED PRINTER SETTINGS, NOTED SCALES MAY NO LONGER BE APPLICABLE

BuildBlock BUILDING SYSTEMS

9705 N. BROADWAY EXTENSION, SUITE 200, OKLAHOMA CITY, OK 73114
OFFICE: 405-840-3386 | TOLL FREE: 866-222-2575 | FAX: 831-597-0792
BUILDBLOCK.COM

8" ANGLE BLOCKS

DATE/REV	2-2-17 /3	SCALE	NTS	DETAIL SHEET
NOTES				4

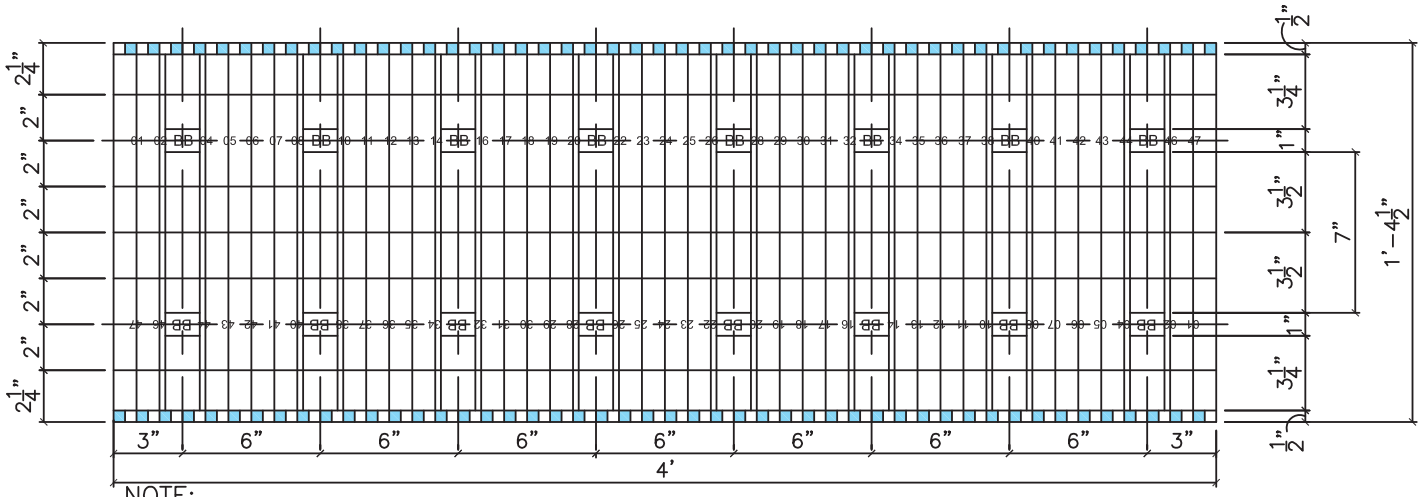

NOTE:
* FORM IS REVERSIBLE BOTH VERTICALLY AND HORIZONTALLY
* BLOCKS STACK @1'-4" (16") INCREMENTS

3 / 04a FRONT VIEW
SCALE: 1 1/2" = 1'-0"

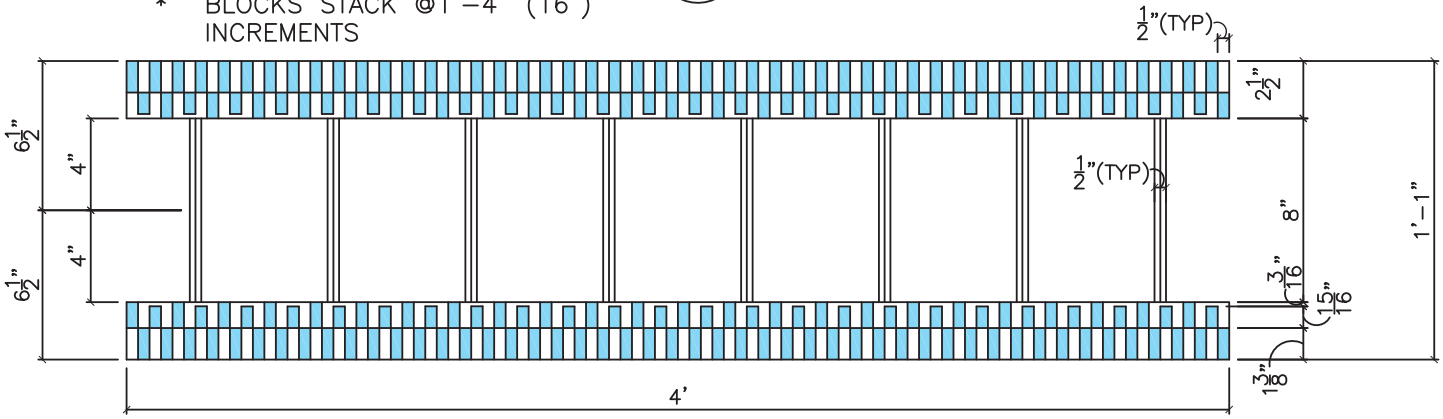

2 / 04a TOP/BOTTOM VIEW (REVERSIBLE)
SCALE: 1 1/2" = 1'-0"

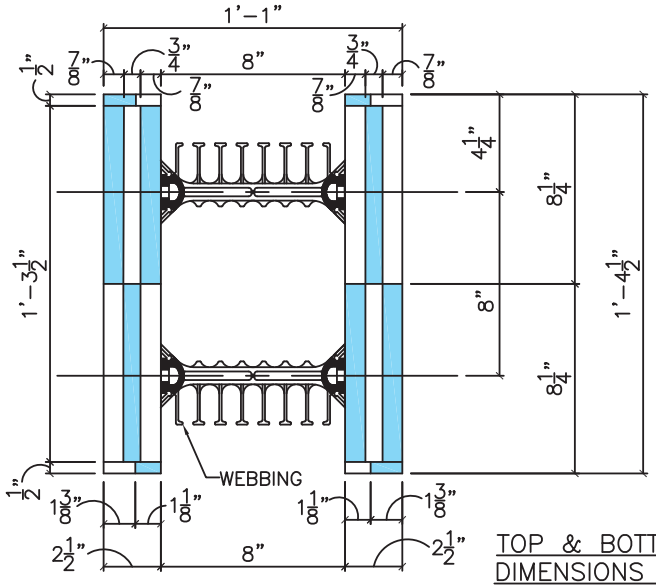

TOP & BOTTOM DIMENSIONS EQUAL

1 / 04a SIDE VIEW
SCALE: 1 1/2" = 1'-0"

LEGEND
= POSITIVE PROFILES (TONGUES)
= NEGATIVE PROFILES (GROOVES)

NOTE:
DUE TO VARIATIONS IN SELECTED PRINTER SETTINGS, NOTED SCALES MAY NO LONGER BE APPLICABLE

BuildBlock® BUILDING SYSTEMS

9705 N. BROADWAY EXTENSION, SUITE 200, OKLAHOMA CITY, OK 73114
OFFICE: 405-840-3386 | TOLL FREE: 866-222-2575 | FAX: 831-597-0792
BUILDBLOCK.COM

8" KNOCKDOWN STRAIGHT BLOCKS

DATE/REV	2-2-17 /3	SCALE	NTS	DETAIL SHEET
NOTES				4A

CONSTRUCTION SHALL BE IN ACCORDANCE WITH ALL APPLICABLE LOCAL AND NATIONAL CODES. ALL DRAWINGS ARE SUBJECT TO CHANGE WITHOUT NOTICE.

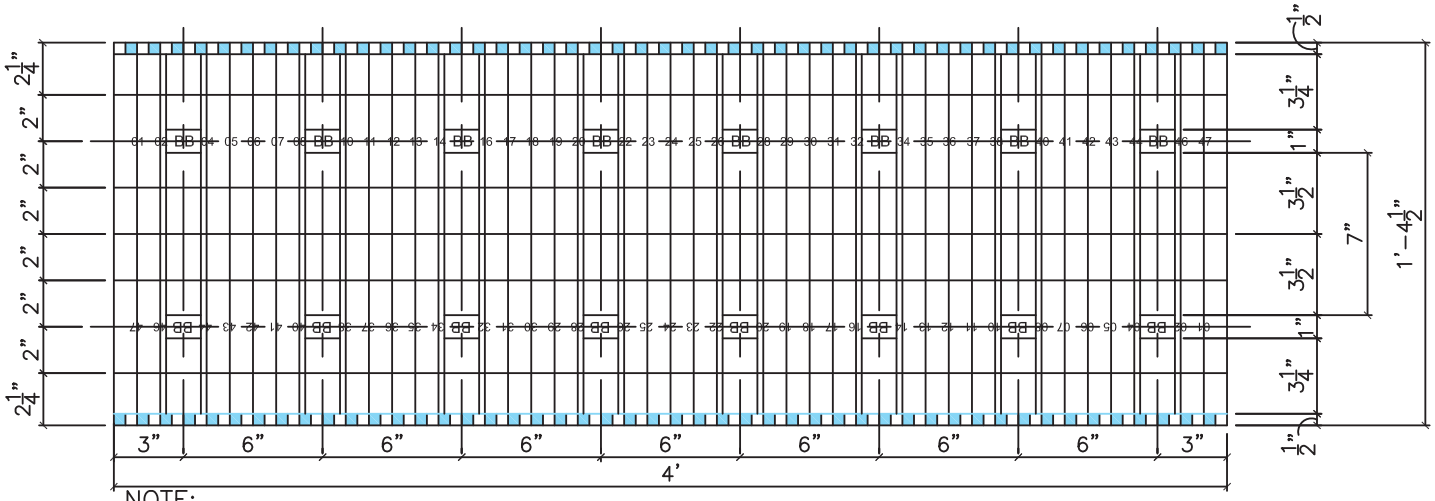

NOTE:
* FORM IS REVERSIBLE BOTH VERTICALLY AND HORIZONTALLY
* BLOCKS STACK @1'–4" (16") INCREMENTS

3 / 04b FRONT VIEW
SCALE: 1 1/2" = 1'–0"

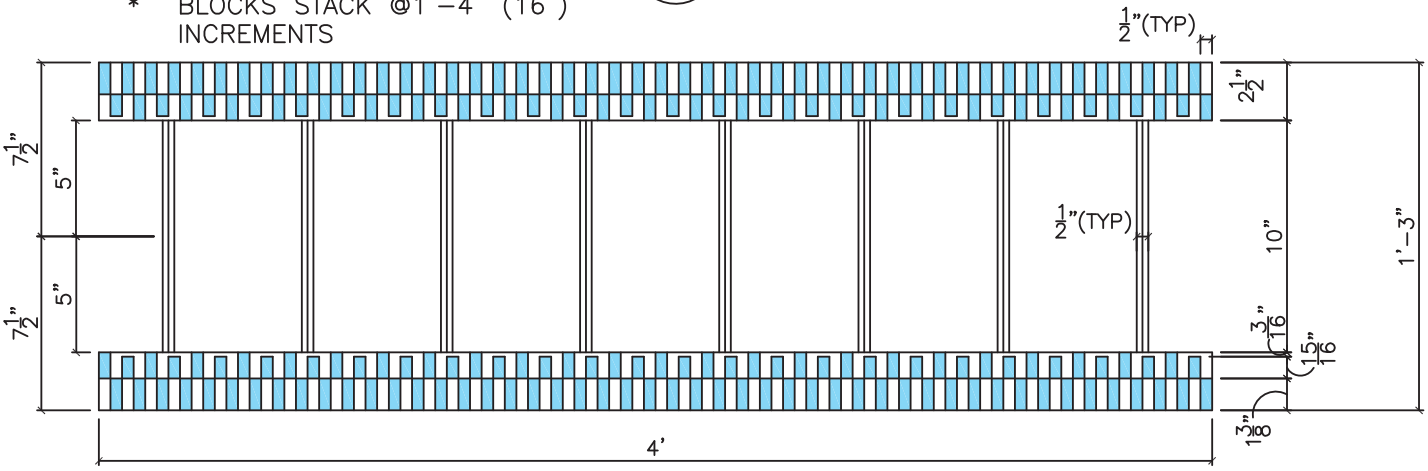

2 / 04b TOP/BOTTOM VIEW (REVERSIBLE)
SCALE: 1 1/2" = 1'–0"

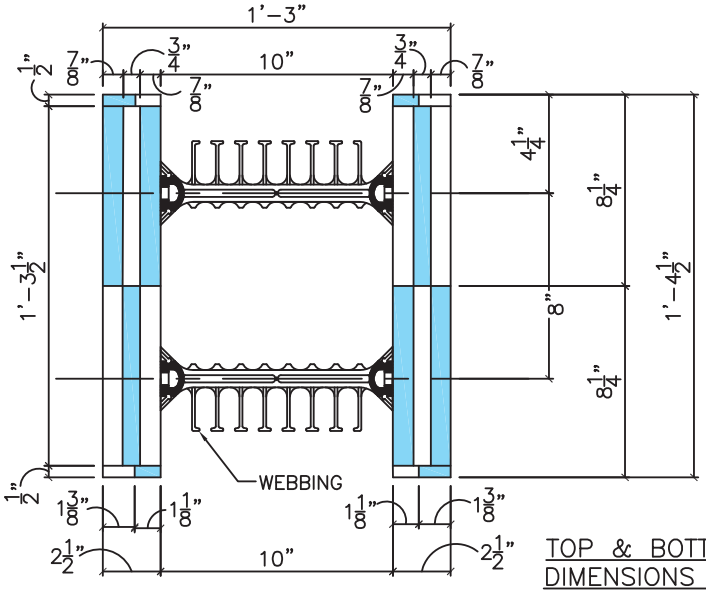

1 / 04b SIDE VIEW
SCALE: 1 1/2" = 1'–0"

LEGEND

= POSITIVE PROFILES (TONGUES)

= NEGATIVE PROFILES (GROOVES)

NOTE:
DUE TO VARIATIONS IN SELECTED PRINTER SETTINGS, NOTED SCALES MAY NO LONGER BE APPLICABLE

TOP & BOTTOM DIMENSIONS EQUAL

BuildBlock BUILDING SYSTEMS

10" KNOCKDOWN STRAIGHT BLOCKS

DATE/REV	2-2-17 /3	SCALE	NTS	DETAIL SHEET
NOTES				4B

9705 N. BROADWAY EXTENSION, SUITE 200, OKLAHOMA CITY, OK 73114
OFFICE: 405-840-3386 | TOLL FREE: 866-222-2575 | FAX: 831-597-0792
BUILDBLOCK.COM

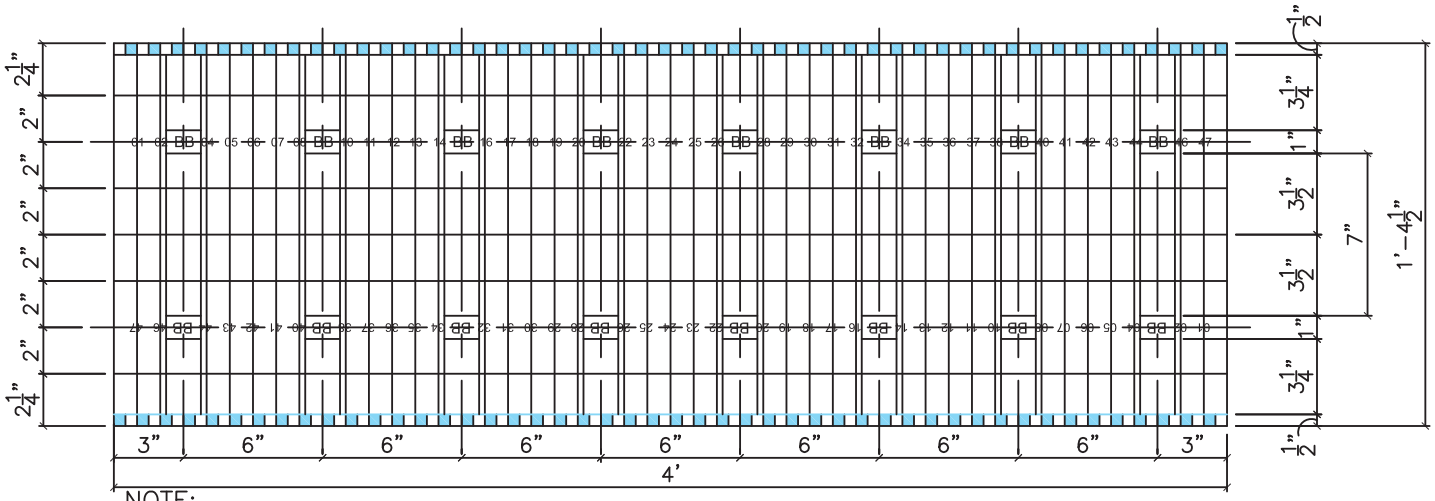

NOTE:
* FORM IS REVERSIBLE BOTH VERTICALLY AND HORIZONTALLY
* BLOCKS STACK @1'-4" (16") INCREMENTS

3 / 04c FRONT VIEW
SCALE: 1 1/2" = 1'-0"

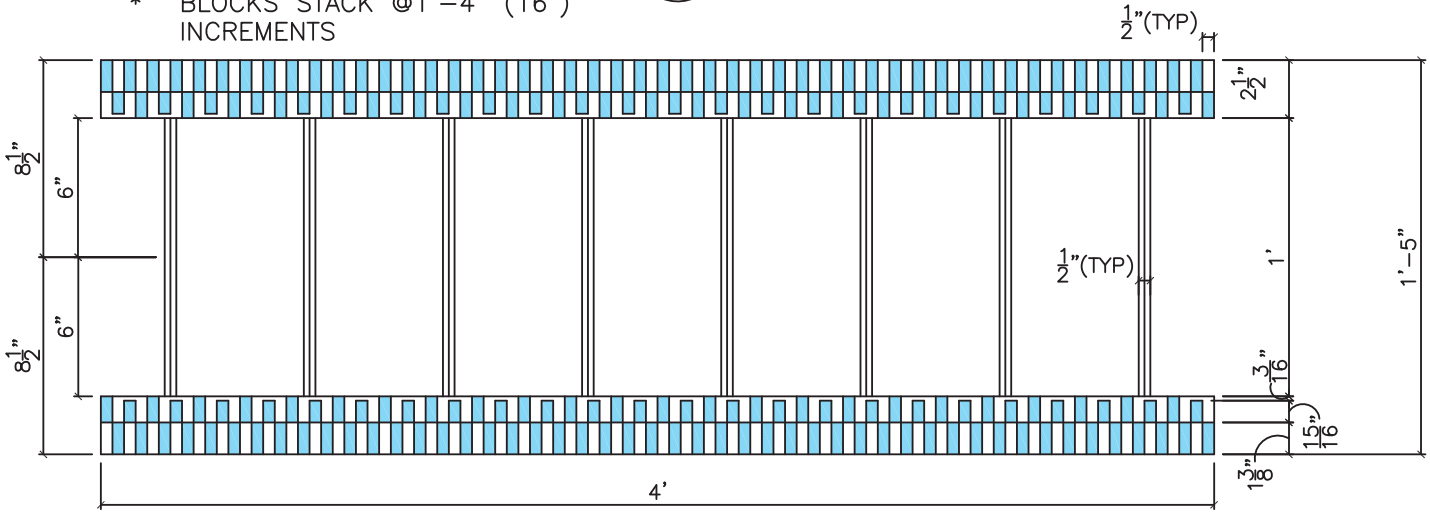

2 / 04c TOP/BOTTOM VIEW (REVERSIBLE)
SCALE: 1 1/2" = 1'-0"

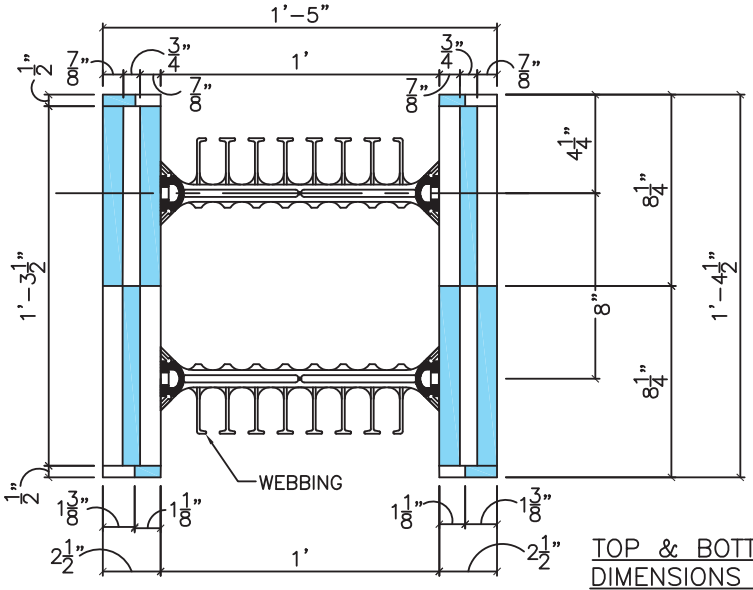

TOP & BOTTOM DIMENSIONS EQUAL

1 / 04c SIDE VIEW
SCALE: 1 1/2" = 1'-0"

LEGEND
= POSITIVE PROFILES (TONGUES)
= NEGATIVE PROFILES (GROOVES)

NOTE:
DUE TO VARIATIONS IN SELECTED PRINTER SETTINGS, NOTED SCALES MAY NO LONGER BE APPLICABLE

BuildBlock BUILDING SYSTEMS

9705 N. BROADWAY EXTENSION, SUITE 200, OKLAHOMA CITY, OK 73114
OFFICE: 405-840-3386 | TOLL FREE: 866-222-2575 | FAX: 831-597-0792
BUILDBLOCK.COM

12" KNOCKDOWN STRAIGHT BLOCKS

DATE/REV	2-2-17 /3	SCALE	NTS	DETAIL SHEET
NOTES				4C

CONSTRUCTION SHALL BE IN ACCORDANCE WITH ALL APPLICABLE LOCAL AND NATIONAL CODES. ALL DRAWINGS ARE SUBJECT TO CHANGE WITHOUT NOTICE.

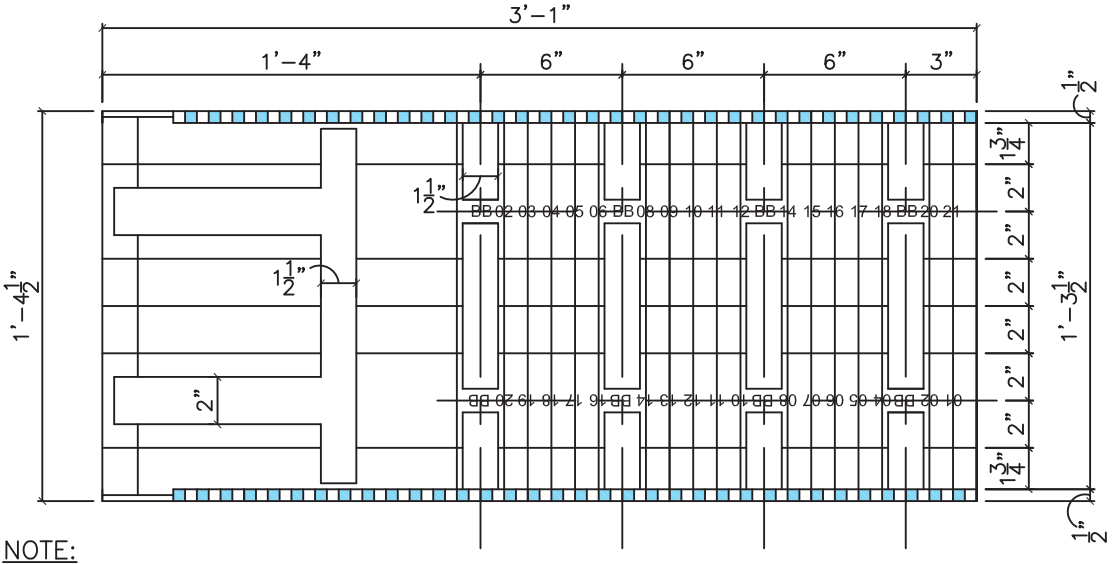

NOTE:

* FORM IS REVERSIBLE BOTH VERTICALLY AND HORIZONTALLY
* BLOCKS STACK @1'–4" (16") INCREMENTS

2 / 04d SIDE VIEW
SCALE: 1 1/2" = 1'–0"

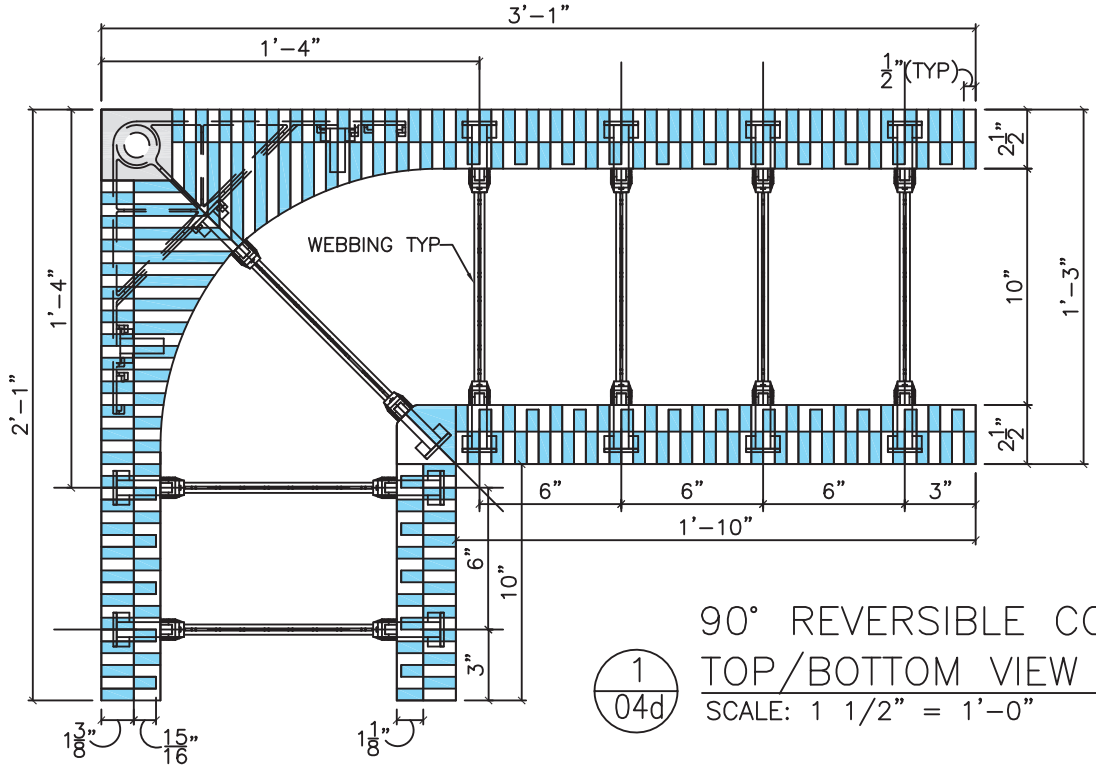

1 / 04d 90° REVERSIBLE CORNER TOP/BOTTOM VIEW
SCALE: 1 1/2" = 1'–0"

LEGEND

- ■ = POSITIVE PROFILES (TONGUES)
- □ = NEGATIVE PROFILES (GROOVES)
- ▒ = 1/2 HEIGHT POSITIVE PROFILES

NOTE:
DUE TO VARIATIONS IN SELECTED PRINTER SETTINGS, NOTED SCALES MAY NO LONGER BE APPLICABLE

BuildBlock® BUILDING SYSTEMS

9705 N. BROADWAY EXTENSION, SUITE 200, OKLAHOMA CITY, OK 73114
OFFICE: 405-840-3386 | TOLL FREE: 866-222-2575 | FAX: 831-597-0792
BUILDBLOCK.COM

10" KNOCKDOWN 90° CORNER BLOCK

DATE/REV	2-2-17 /3	SCALE	NTS	DETAIL SHEET
NOTES				4D

CONSTRUCTION SHALL BE IN ACCORDANCE WITH ALL APPLICABLE LOCAL AND NATIONAL CODES. ALL DRAWINGS ARE SUBJECT TO CHANGE WITHOUT NOTICE.

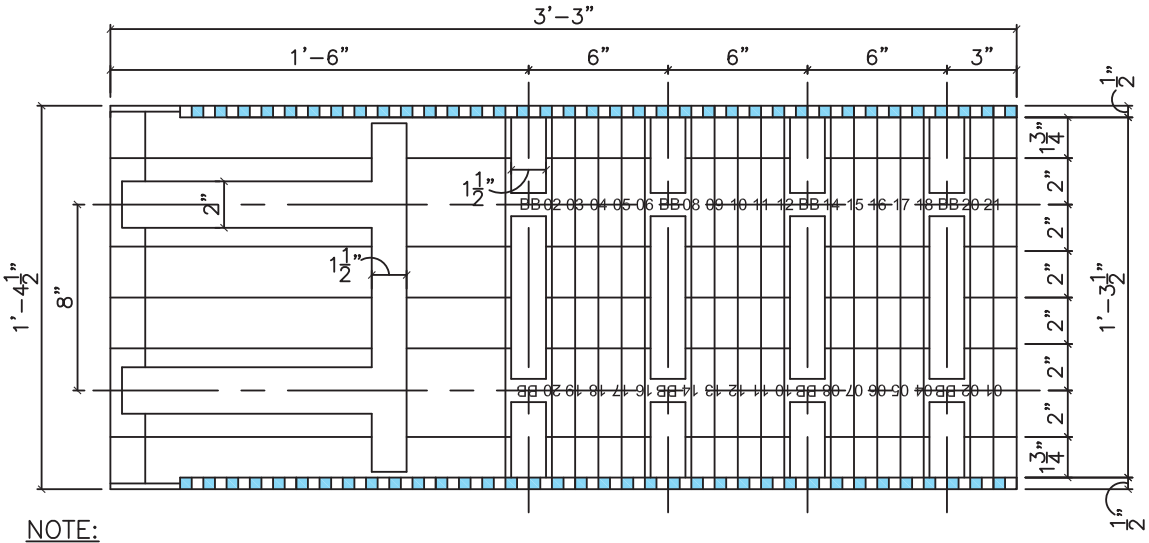

NOTE:

* FORM IS REVERSIBLE BOTH VERTICALLY AND HORIZONTALLY
* BLOCKS STACK @1'–4" (16") INCREMENTS

2 / 04e SIDE VIEW

SCALE: 1 1/2" = 1'–0"

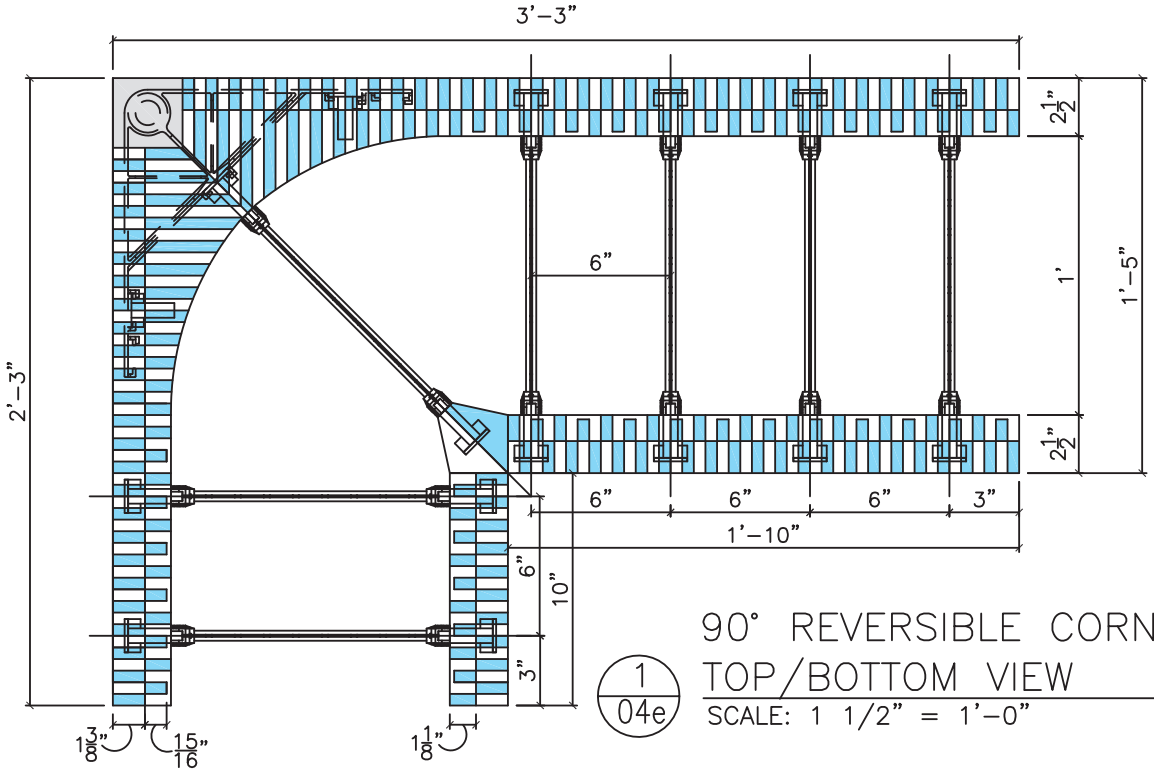

1 / 04e 90° REVERSIBLE CORNER TOP/BOTTOM VIEW

SCALE: 1 1/2" = 1'–0"

LEGEND

- ■ = POSITIVE PROFILES (TONGUES)
- □ = NEGATIVE PROFILES (GROOVES)
- ▒ = 1/2 HEIGHT POSITIVE PROFILES

NOTE:
DUE TO VARIATIONS IN SELECTED PRINTER SETTINGS, NOTED SCALES MAY NO LONGER BE APPLICABLE

BuildBlock® BUILDING SYSTEMS

9705 N. BROADWAY EXTENSION, SUITE 200, OKLAHOMA CITY, OK 73114
OFFICE: 405-840-3386 | TOLL FREE: 866-222-2575 | FAX: 831-597-0792
BUILDBLOCK.COM

12" KNOCKDOWN 90° CORNER BLOCK

DATE/REV	2-2-17 /3	SCALE	NTS	DETAIL SHEET
NOTES				4E

CONSTRUCTION SHALL BE IN ACCORDANCE WITH ALL APPLICABLE LOCAL AND NATIONAL CODES. ALL DRAWINGS ARE SUBJECT TO CHANGE WITHOUT NOTICE.

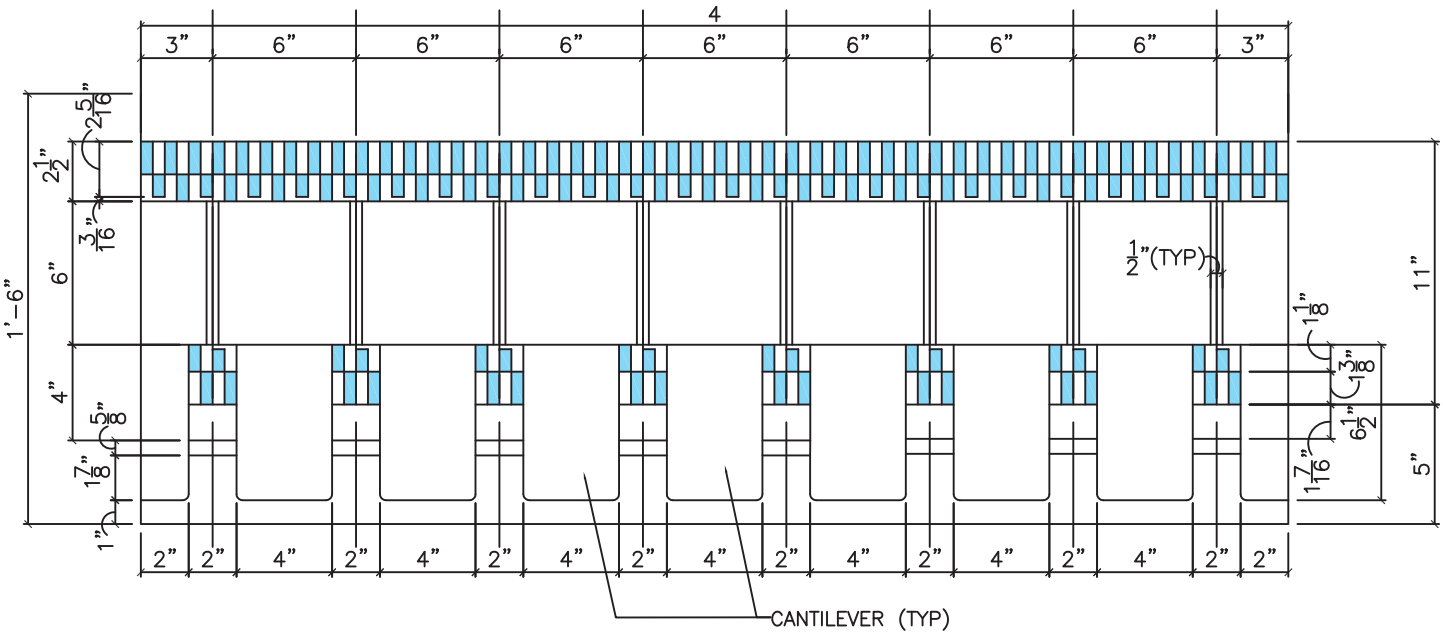

2 / 05 TOP VIEW
SCALE: 1 1/2" = 1'-0"

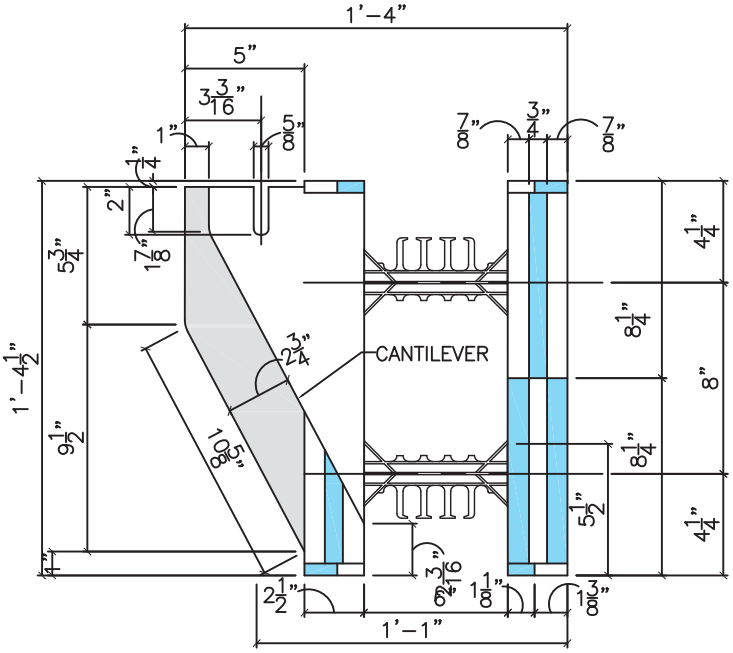

1 / 05 END VIEW
SCALE: 1 1/2" = 1'-0"

LEGEND

- ■ = POSITIVE PROFILES (TONGUES)
- □ = NEGATIVE PROFILES (GROOVES)
- ▒ = BASELINE

NOTE:
DUE TO VARIATIONS IN SELECTED PRINTER SETTINGS, NOTED SCALES MAY NO LONGER BE APPLICABLE

BuildBlock BUILDING SYSTEMS

9705 N. BROADWAY EXTENSION, SUITE 200, OKLAHOMA CITY, OK 73114
OFFICE: 405-840-3386 | TOLL FREE: 866-222-2575 | FAX: 831-597-0792
BUILDBLOCK.COM

6" LEDGE BLOCK

DATE/REV	2-2-17 /3	SCALE	NTS	DETAIL SHEET
NOTES				5

CONSTRUCTION SHALL BE IN ACCORDANCE WITH ALL APPLICABLE LOCAL AND NATIONAL CODES. ALL DRAWINGS ARE SUBJECT TO CHANGE WITHOUT NOTICE.

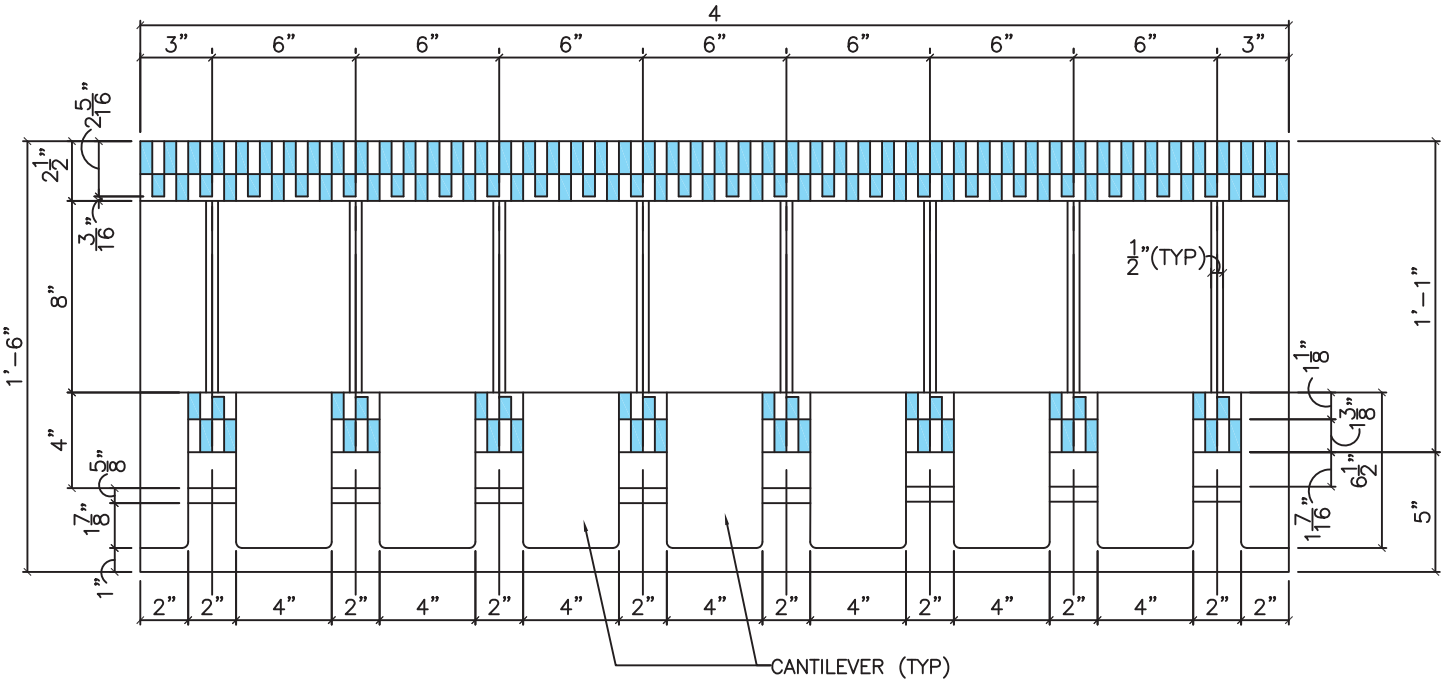

2 / 05a TOP VIEW
SCALE: 1 1/2" = 1'–0"

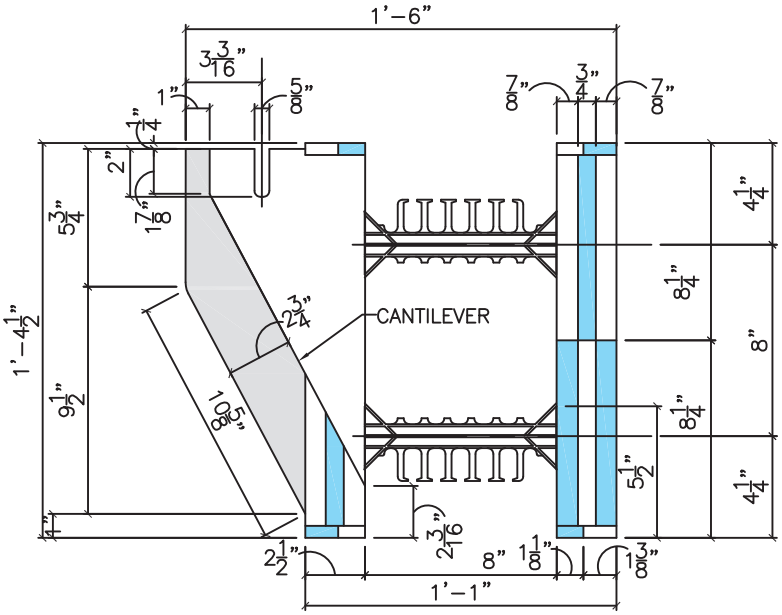

1 / 05a END VIEW
SCALE: 1 1/2" = 1'–0"

LEGEND

- ▇ = POSITIVE PROFILES (TONGUES)
- □ = NEGATIVE PROFILES (GROOVES)
- ▒ = BASELINE

NOTE:
DUE TO VARIATIONS IN SELECTED PRINTER SETTINGS, NOTED SCALES MAY NO LONGER BE APPLICABLE

BuildBlock BUILDING SYSTEMS

8" LEDGE BLOCK

DATE/REV	2-2-17 /3	SCALE	NTS	DETAIL SHEET
NOTES				5A

9705 N. BROADWAY EXTENSION, SUITE 200, OKLAHOMA CITY, OK 73114
OFFICE: 405-840-3386 | TOLL FREE: 866-222-2575 | FAX: 831-597-0792
BUILDBLOCK.COM

CONSTRUCTION SHALL BE IN ACCORDANCE WITH ALL APPLICABLE LOCAL AND NATIONAL CODES. ALL DRAWINGS ARE SUBJECT TO CHANGE WITHOUT NOTICE.

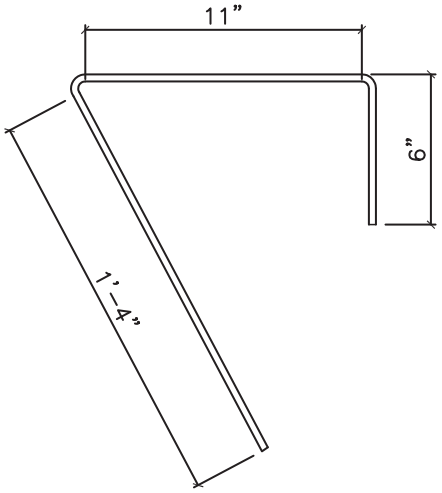

1 / 05a1 STIRRUP DETAIL
SCALE: 1 1/2" = 1'-0"

BRICK LEDGE STIRRUP REINFORCEMENT IS USED TO ADD SHEAR RESISTANCE TO THE BRICK LEDGE FORM. THE STIRRUPS SHOULD BE PRE-BENT FOR EASY INSTALLATION. USE DIMENSIONS FOR THE APPROPRIATE BRICK LEDGE FORM SIZE FOR STIRRUP.

STIRRUPS SHOULD BE #3 REBAR MIN. GRADE 40

STIRRUP SPACING:

<500 LB/LFT – 24" O.C.

<1000 LB/LFT – 18" O.C.

<1500 LB/LFT – 12" O.C.

TYP VENEER WEIGHT (LB/FT)		
HEIGHT (FT)	3½ BRICK	4" STONE OR CONCRETE
8	290	400
10	360	500
12	440	600
14	510	700
16	580	800
18	660	900
20	730	1000
22	800	1100
24	880	1200
26	950	1300
28	1020	1400
30	1090	1500

NOTE:
DUE TO VARIATIONS IN SELECTED PRINTER SETTINGS, NOTED SCALES MAY NO LONGER BE APPLICABLE

BuildBlock® BUILDING SYSTEMS

9705 N. BROADWAY EXTENSION, SUITE 200, OKLAHOMA CITY, OK 73114
OFFICE: 405-840-3386 | TOLL FREE: 866-222-2575 | FAX: 831-597-0792
BUILDBLOCK.COM

8" LEDGE BLOCK STIRRUP REINFORCEMENT

DATE/REV	2-2-17 /3	SCALE	NTS	DETAIL SHEET
NOTES				5A1

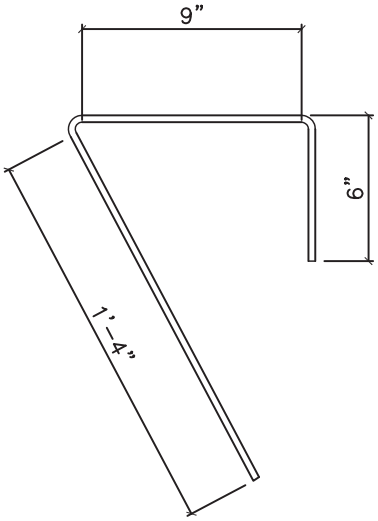

1 / 05a2 STIRRUP DETAIL
SCALE: 1 1/2" = 1'-0"

BRICK LEDGE STIRRUP REINFORCEMENT IS USED TO ADD SHEAR RESISTANCE TO THE BRICK LEDGE FORM. THE STIRRUPS SHOULD BE PRE-BENT FOR EASY INSTALLATION. USE DIMENSIONS FOR THE APPROPRIATE BRICK LEDGE FORM SIZE FOR STIRRUP.

STIRRUPS SHOULD BE #3 REBAR MIN. GRADE 40

STIRRUP SPACING:

<500 LB/LFT – 24" O.C.

<1000 LB/LFT – 18" O.C.

<1500 LB/LFT – 12" O.C.

TYP VENEER WEIGHT (LB/FT)		
HEIGHT (FT)	3½ BRICK	4" STONE OR CONCRETE
8	290	400
10	360	500
12	440	600
14	510	700
16	580	800
18	660	900
20	730	1000
22	800	1100
24	880	1200
26	950	1300
28	1020	1400
30	1090	1500

NOTE:
DUE TO VARIATIONS IN SELECTED PRINTER SETTINGS, NOTED SCALES MAY NO LONGER BE APPLICABLE

BuildBlock® BUILDING SYSTEMS

9705 N. BROADWAY EXTENSION, SUITE 200, OKLAHOMA CITY, OK 73114
OFFICE: 405-840-3386 | TOLL FREE: 866-222-2575 | FAX: 831-597-0792
BUILDBLOCK.COM

6" LEDGE BLOCK STIRRUP REINFORCEMENT

DATE/REV	2-2-17 /3	SCALE	NTS	DETAIL SHEET
NOTES				5A2

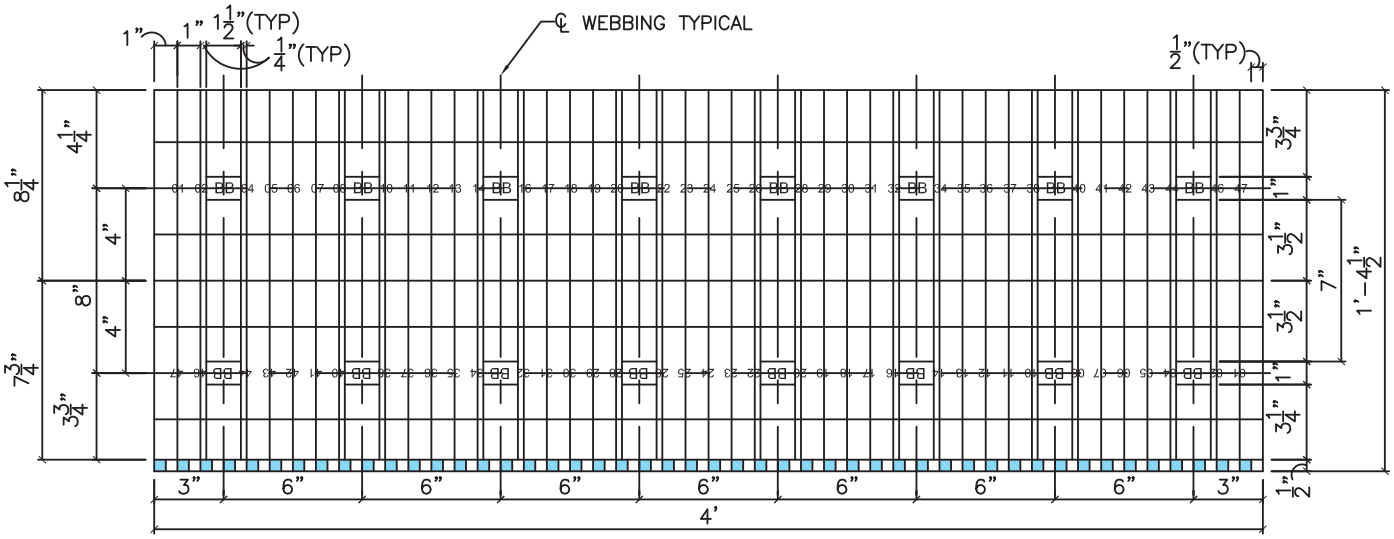

*BLOCKS STACK @1'4" (16") INCREMENTS

3 / 05b FRONT VIEW
SCALE: 1 1/2" = 1'-0"

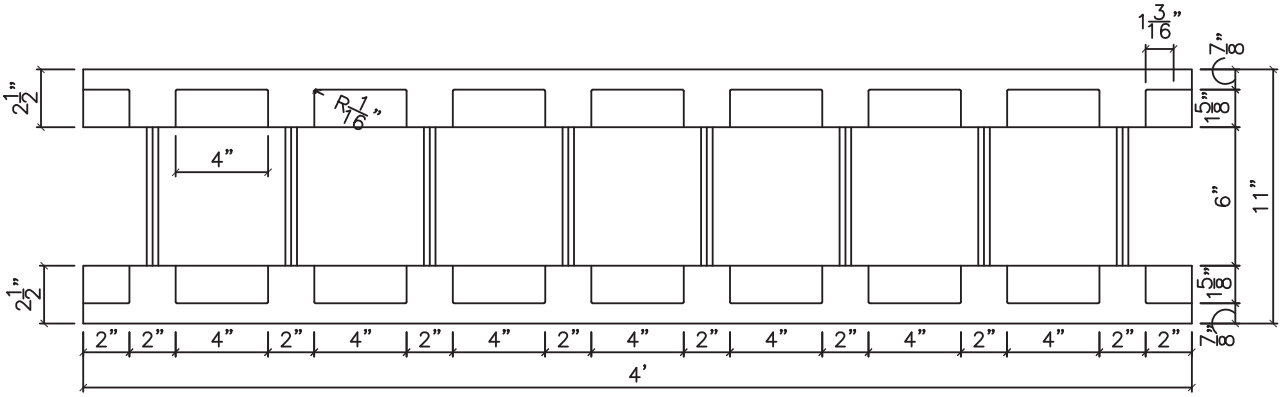

2 / 05b TOP/BOTTOM VIEW
SCALE: 1 1/2" = 1'-0"

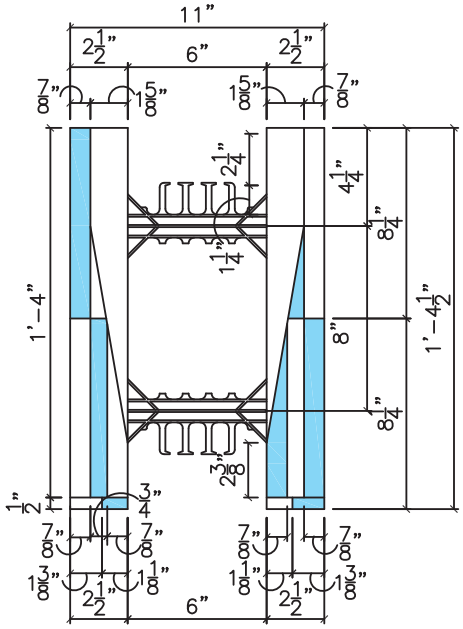

1 / 05b SIDE VIEW
SCALE: 1 1/2" = 1'-0"

LEGEND

= POSITIVE PROFILES (TONGUES)

= NEGATIVE PROFILES (GROOVES)

NOTE:
THE BLUE AREA INSIDE THE RED IS SOLID BELOW THE RED

BuildBlock® BUILDING SYSTEMS

9705 N. BROADWAY EXTENSION, SUITE 200, OKLAHOMA CITY, OK 73114
OFFICE: 405-840-3386 | TOLL FREE: 866-222-2575 | FAX: 831-597-0792
BUILDBLOCK.COM

6" TAPER TOP BLOCK

DATE/REV	2-2-17 /3	SCALE	NTS	DETAIL SHEET
NOTES				5B

CONSTRUCTION SHALL BE IN ACCORDANCE WITH ALL APPLICABLE LOCAL AND NATIONAL CODES. ALL DRAWINGS ARE SUBJECT TO CHANGE WITHOUT NOTICE.

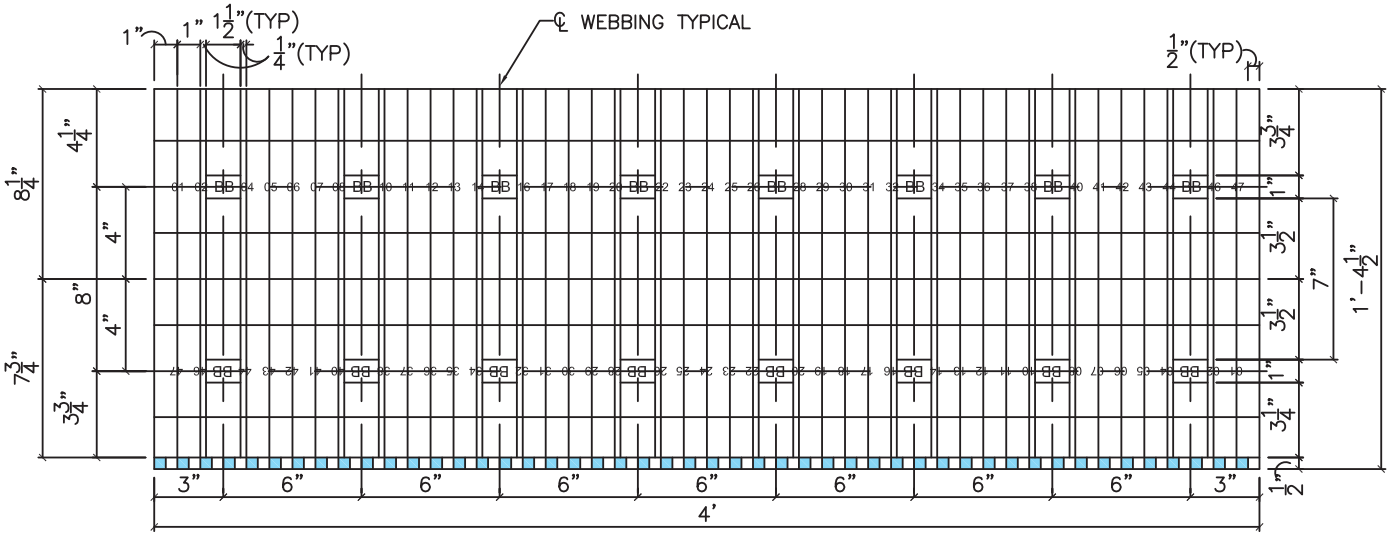

*BLOCKS STACK @1'4" (16") INCREMENTS

3 / 05c FRONT VIEW
SCALE: 1 1/2" = 1'-0"

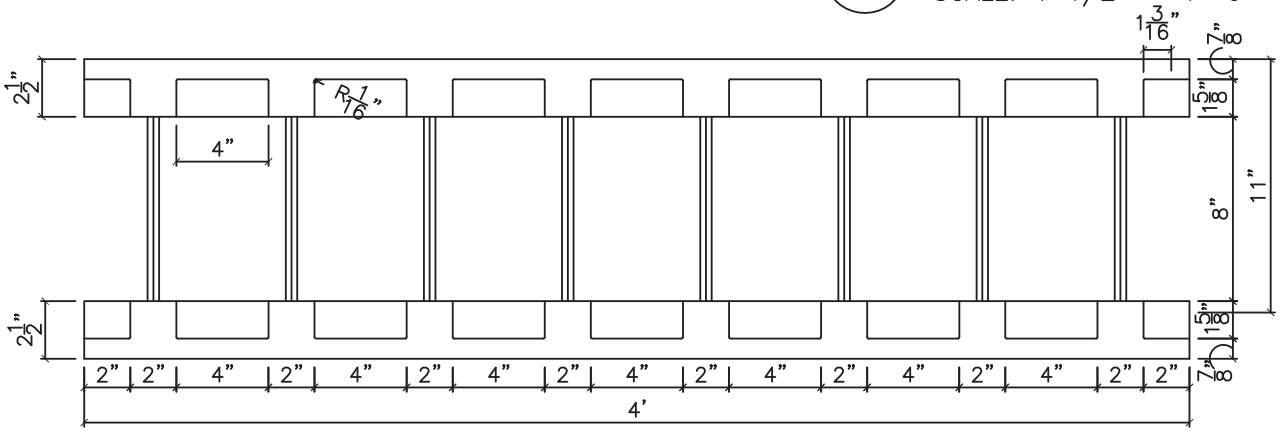

2 / 05c TOP/BOTTOM VIEW
SCALE: 1 1/2" = 1'-0"

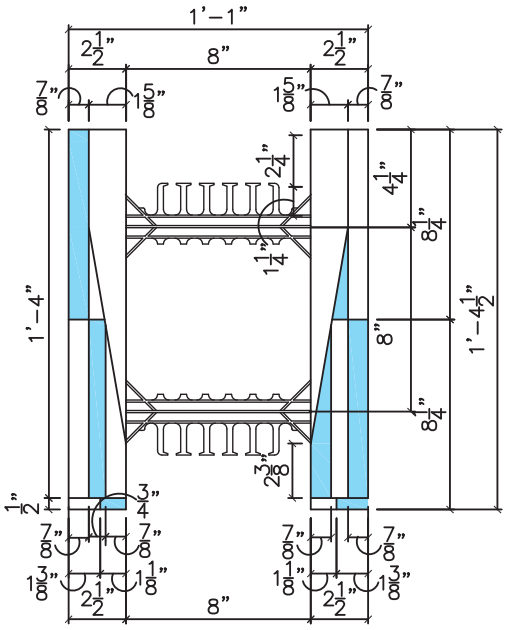

1 / 05c SIDE VIEW
SCALE: 1 1/2" = 1'-0"

LEGEND

■ = POSITIVE PROFILES (TONGUES)
□ = NEGATIVE PROFILES (GROOVES)

NOTE:
THE BLUE AREA INSIDE THE RED IS SOLID BELOW THE RED

BuildBlock® BUILDING SYSTEMS

9705 N. BROADWAY EXTENSION, SUITE 200, OKLAHOMA CITY, OK 73114
OFFICE: 405-840-3386 | TOLL FREE: 866-222-2575 | FAX: 831-597-0792
BUILDBLOCK.COM

8" TAPER TOP BLOCK

DATE/REV	2-2-17 /3	SCALE	NTS	DETAIL SHEET
NOTES				5C

CONSTRUCTION SHALL BE IN ACCORDANCE WITH ALL APPLICABLE LOCAL AND NATIONAL CODES. ALL DRAWINGS ARE SUBJECT TO CHANGE WITHOUT NOTICE.

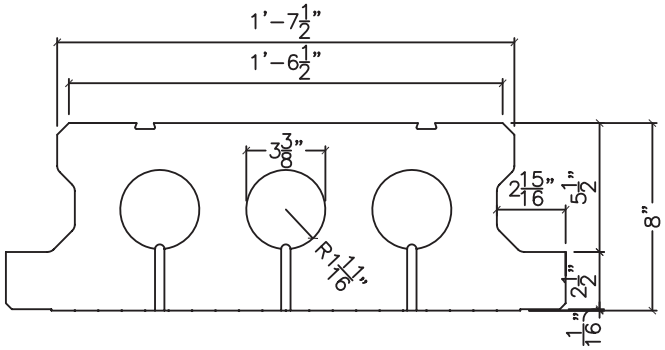

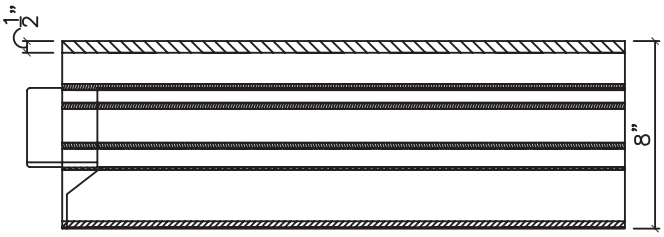

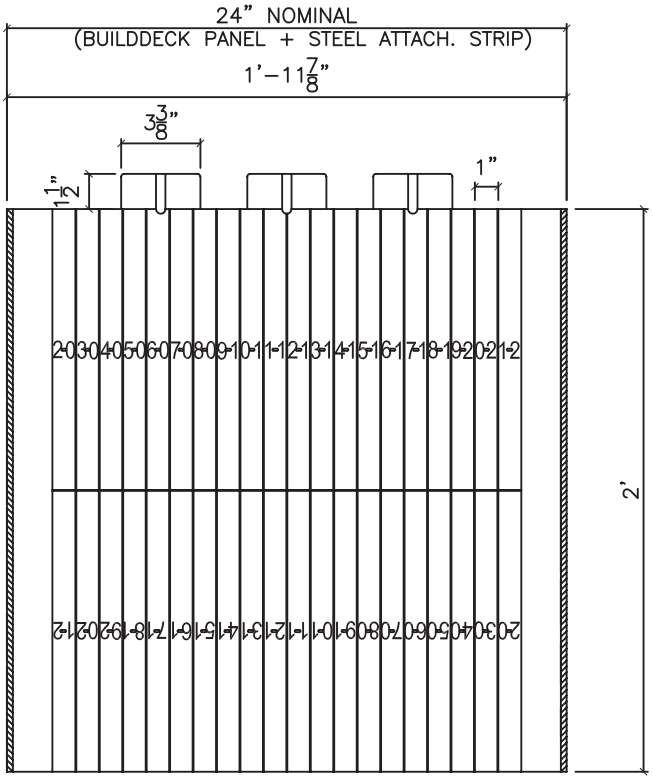

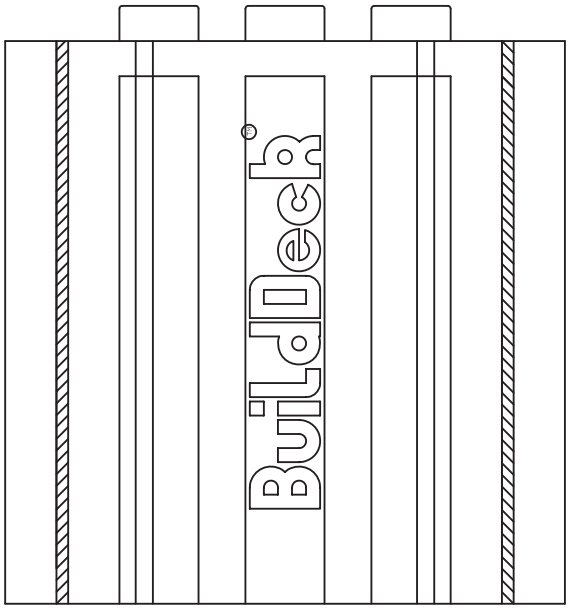

NOTE:
ALL CONCRETE AND STEEL DESIGN MUST BE APPROVED BY THE PROJECT SPECIFIC ENGINEER OF RECORD

NOTE:
EPS RISERS OF VARYING HEIGHTS MAY BE ADDED TO THE TOP OF BUILDDECK PANELS TO ADJUST HEIGHTS ACCORDING TO ENGINEERED SPECIFICATIONS.

NOTE:
DUE TO VARIATIONS IN PRINTERS AND PRINT SETTINGS, THIS DETAIL MAY OR MAY NOT BE TO SCALE.

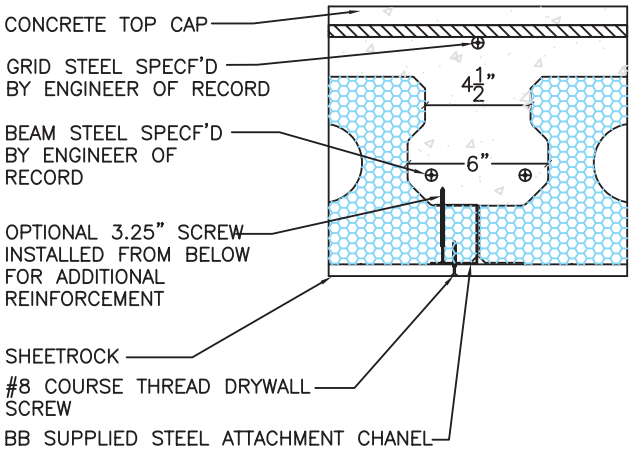

ROBERT F. OLECK
LICENSE No. 52514
STATE OF FLORIDA
PROFESSIONAL ENGINEER

BuildBlock® BUILDING SYSTEMS

9705 N. BROADWAY EXTENSION, SUITE 200, OKLAHOMA CITY, OK 73114
OFFICE: 405-840-3386 | TOLL FREE: 866-222-2575 | FAX: 831-597-0792
BUILDBLOCK.COM

BUILDDECK 8"

DATE/REV	11-17-09	SCALE	NTS	DETAIL SHEET
NOTES	BD-12+2			5D

CONSTRUCTION SHALL BE IN ACCORDANCE WITH ALL APPLICABLE LOCAL AND NATIONAL CODES. ALL DRAWINGS ARE SUBJECT TO CHANGE WITHOUT NOTICE.

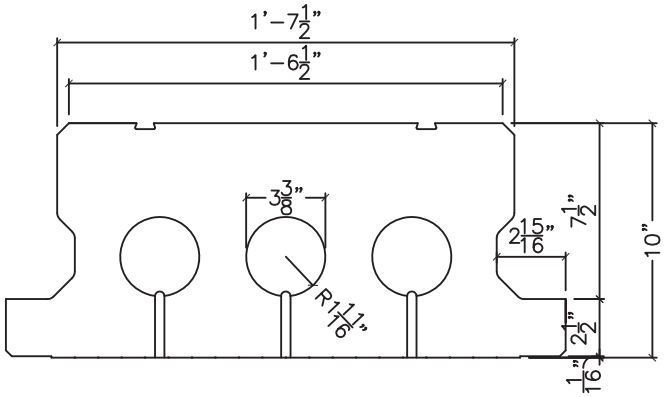

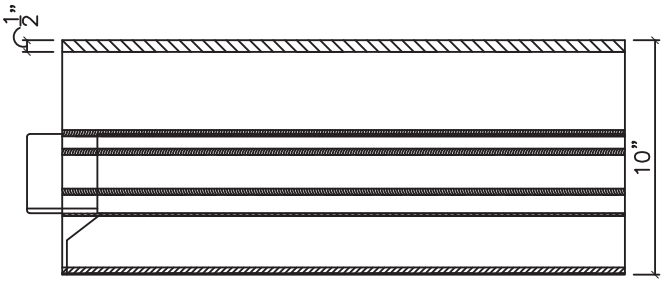

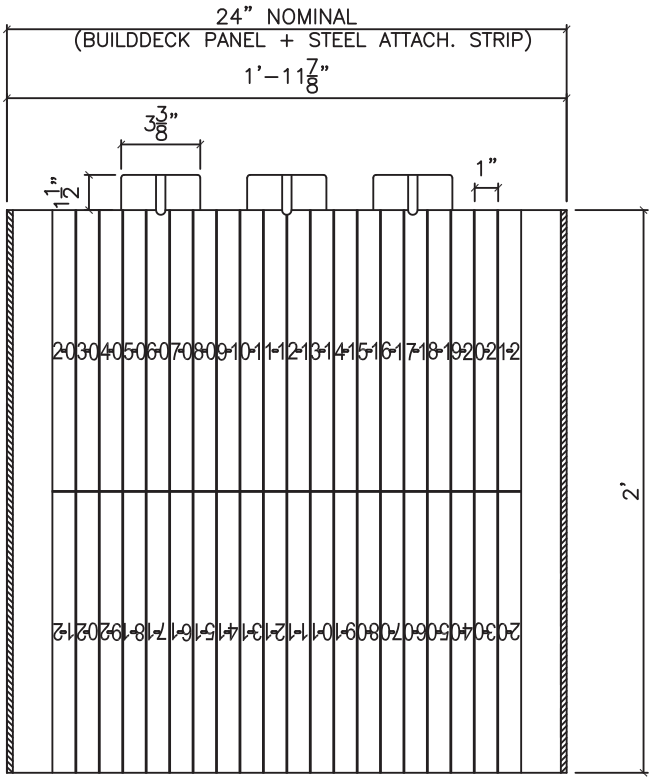

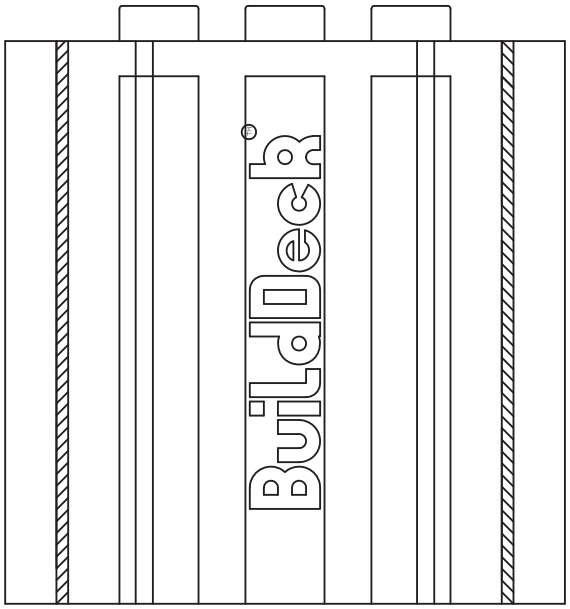

NOTE:
ALL CONCRETE AND STEEL DESIGN MUST BE APPROVED BY THE PROJECT SPECIFIC ENGINEER OF RECORD

NOTE:
EPS RISERS OF VARYING HEIGHTS MAY BE ADDED TO THE TOP OF BUILDDECK PANELS TO ADJUST HEIGHTS ACCORDING TO ENGINEERED SPECIFICATIONS.

NOTE:
DUE TO VARIATIONS IN PRINTERS AND PRINT SETTINGS, THIS DETAIL MAY OR MAY NOT BE TO SCALE.

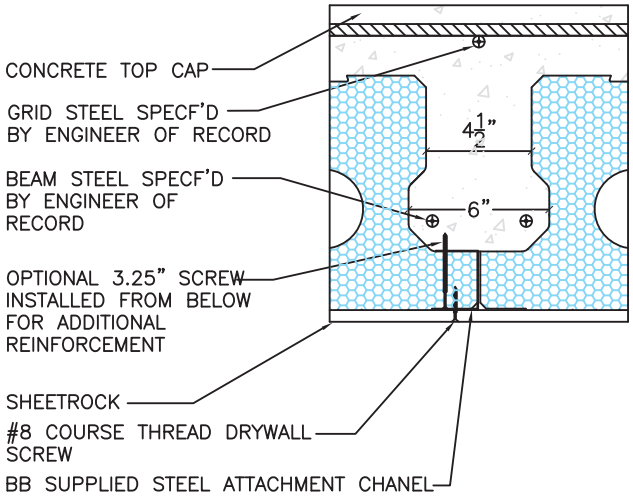

ROBERT F. OLECK
LICENSE No. 52514
STATE OF FLORIDA
PROFESSIONAL ENGINEER

BuildBlock BUILDING SYSTEMS

9705 N. BROADWAY EXTENSION, SUITE 200, OKLAHOMA CITY, OK 73114
OFFICE: 405-840-3386 | TOLL FREE: 866-222-2575 | FAX: 831-597-0792
BUILDBLOCK.COM

BUILDDECK 10"

DATE/REV	11-17-09	SCALE	NTS	DETAIL SHEET
NOTES				5E

CONSTRUCTION SHALL BE IN ACCORDANCE WITH ALL APPLICABLE LOCAL AND NATIONAL CODES. ALL DRAWINGS ARE SUBJECT TO CHANGE WITHOUT NOTICE.

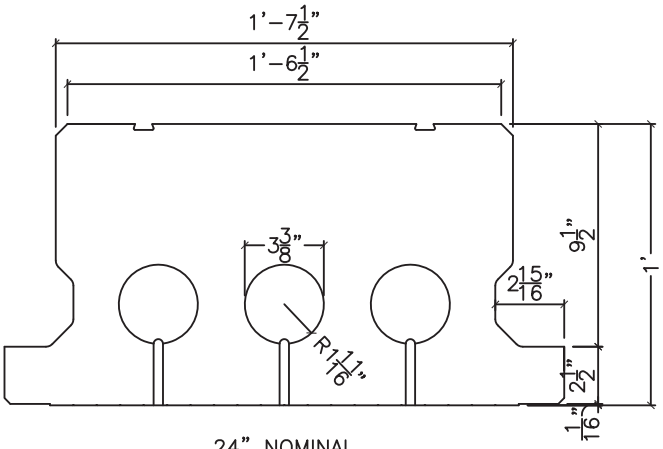

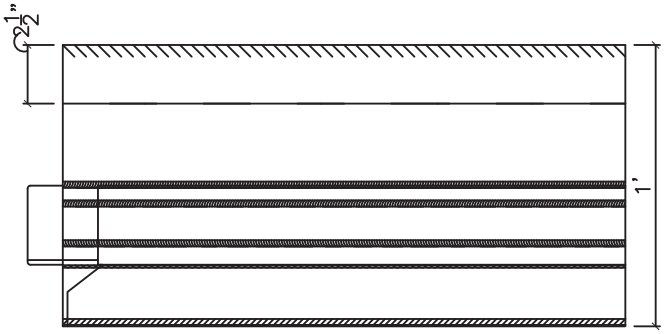

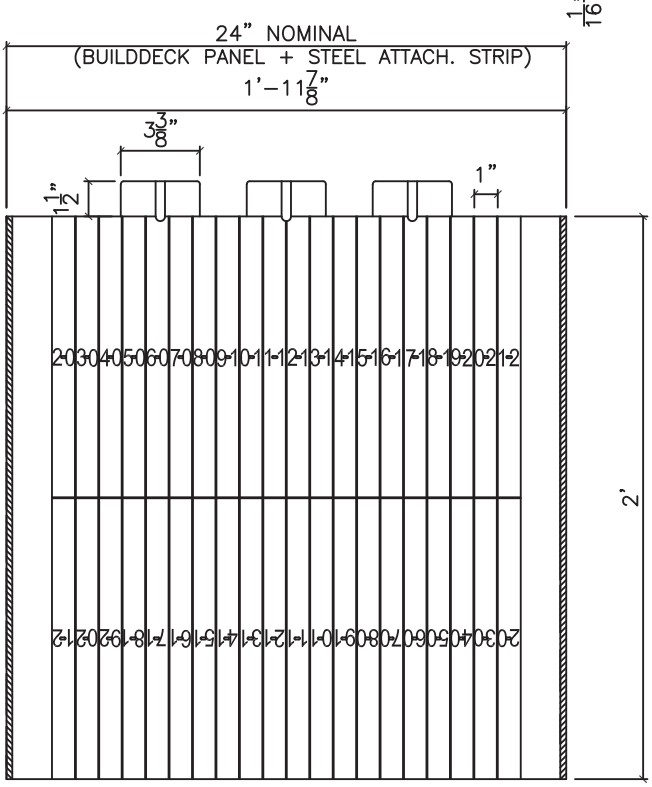

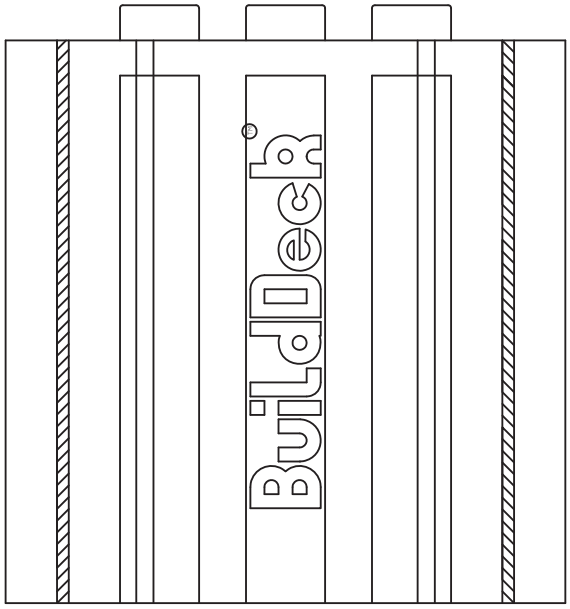

NOTE:
ALL CONCRETE AND STEEL DESIGN MUST BE APPROVED BY THE PROJECT SPECIFIC ENGINEER OF RECORD

NOTE:
EPS RISERS OF VARYING HEIGHTS MAY BE ADDED TO THE TOP OF BUILDDECK PANELS TO ADJUST HEIGHTS ACCORDING TO ENGINEERED SPECIFICATIONS.

NOTE:
DUE TO VARIATIONS IN PRINTERS AND PRINT SETTINGS, THIS DETAIL MAY OR MAY NOT BE TO SCALE.

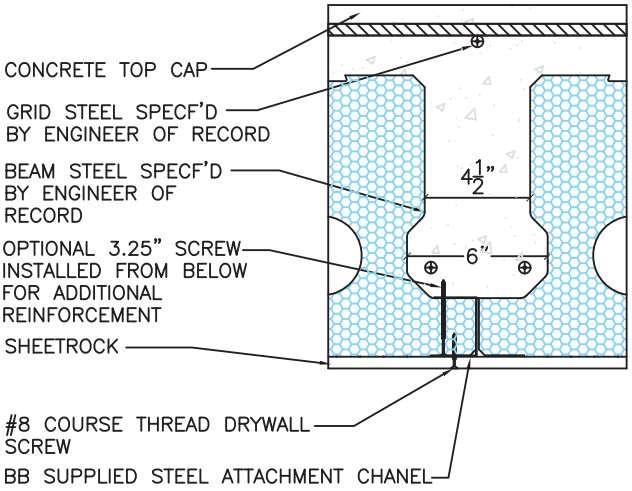

ROBERT F. OLECK
LICENSE No. 52514
STATE OF FLORIDA
PROFESSIONAL ENGINEER

BuildBlock® BUILDING SYSTEMS

9705 N. BROADWAY EXTENSION, SUITE 200, OKLAHOMA CITY, OK 73114
OFFICE: 405-840-3386 | TOLL FREE: 866-222-2575 | FAX: 831-597-0792
BUILDBLOCK.COM

BUILDDECK 12

DATE/REV	11-17-09	SCALE	NTS	DETAIL SHEET
NOTES				5E

CONSTRUCTION SHALL BE IN ACCORDANCE WITH ALL APPLICABLE LOCAL AND NATIONAL CODES. ALL DRAWINGS ARE SUBJECT TO CHANGE WITHOUT NOTICE.

Note:
Due to variations in printers and print settings, this detail may or may not be to scale.

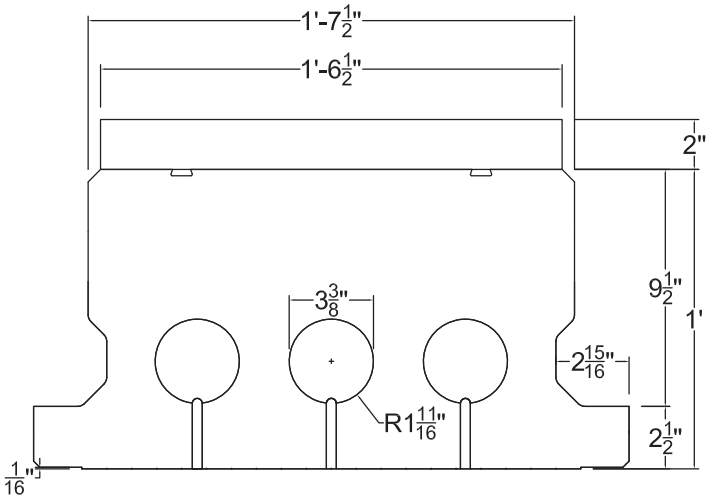

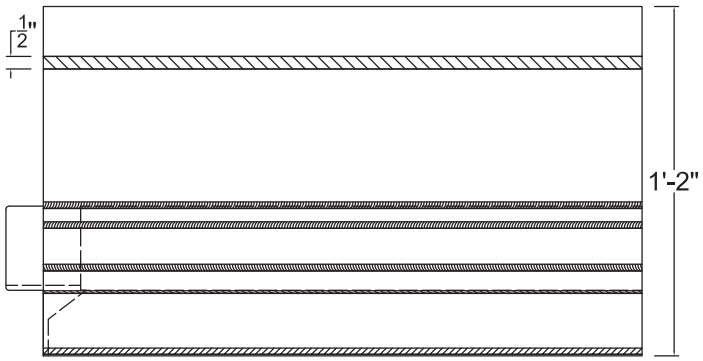

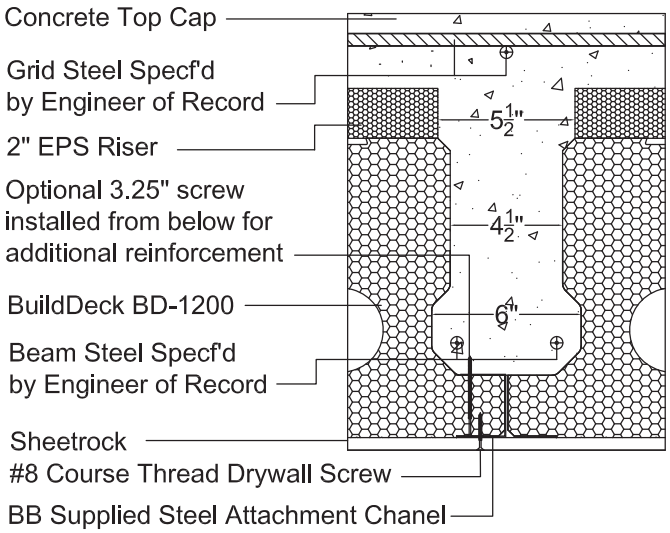

Note:
All concrete and steel design must be approved by the project specific Engineer of Record

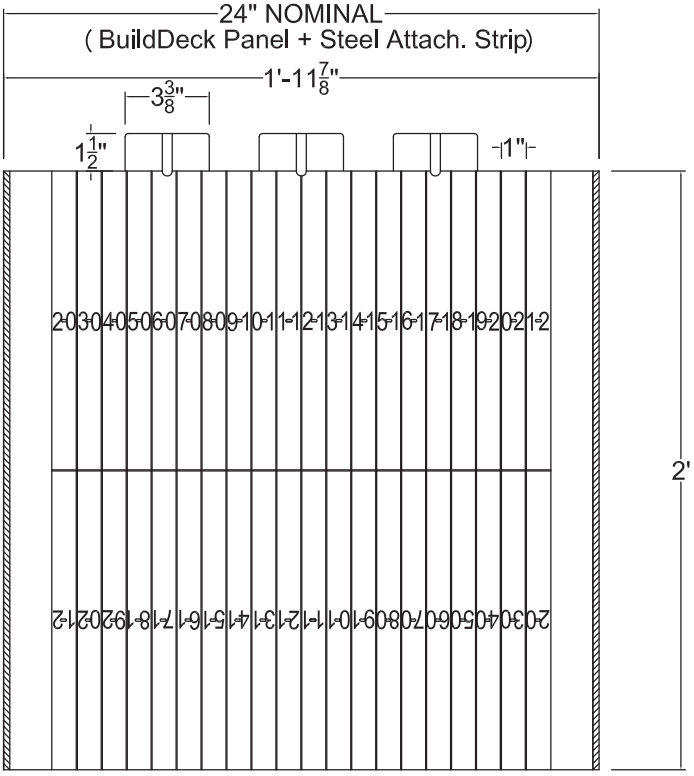

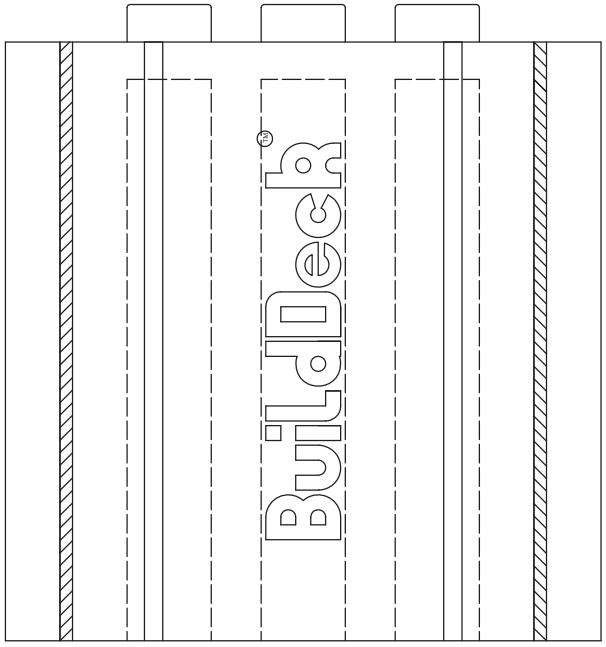

ROBERT F. OLECK
LICENSE No. 52514
STATE OF FLORIDA
PROFESSIONAL ENGINEER

BuildBlock® BUILDING SYSTEMS

9705 N. BROADWAY EXTENSION, SUITE 200, OKLAHOMA CITY, OK 73114
OFFICE: 405-840-3386 | TOLL FREE: 866-222-2575 | FAX: 831-597-0792
BUILDBLOCK.COM

BUILDDECK 12″ + 2″ FOAM TOP HAT

DATE/REV	11-17-09	SCALE	NTS	DETAIL SHEET
NOTES	BD-12+2			5G

CONSTRUCTION SHALL BE IN ACCORDANCE WITH ALL APPLICABLE LOCAL AND NATIONAL CODES. ALL DRAWINGS ARE SUBJECT TO CHANGE WITHOUT NOTICE.

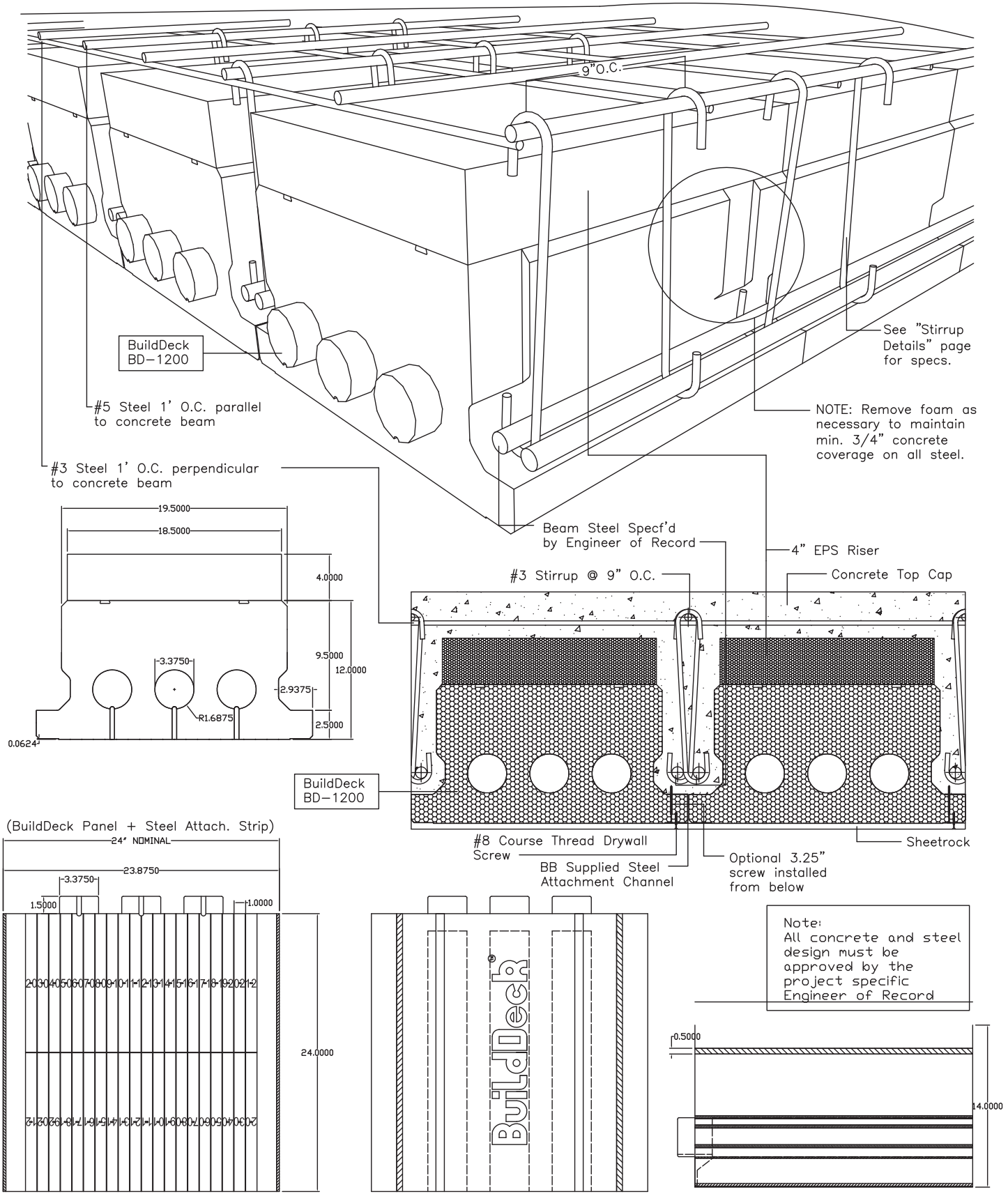

Note:
All concrete and steel design must be approved by the project specific Engineer of Record

ROBERT F. OLECK
LICENSE No. 52514
STATE OF FLORIDA
PROFESSIONAL ENGINEER

BuildBlock® BUILDING SYSTEMS

9705 N. BROADWAY EXTENSION, SUITE 200, OKLAHOMA CITY, OK 73114
OFFICE: 405-840-3386 | TOLL FREE: 866-222-2575 | FAX: 831-597-0792
BUILDBLOCK.COM

BUILDDECK 12" + 4" FOAM TOP HAT

DATE/REV	11-17-09	SCALE	NTS	DETAIL SHEET
NOTES	BD-12+4			5H

CONSTRUCTION SHALL BE IN ACCORDANCE WITH ALL APPLICABLE LOCAL AND NATIONAL CODES. ALL DRAWINGS ARE SUBJECT TO CHANGE WITHOUT NOTICE.

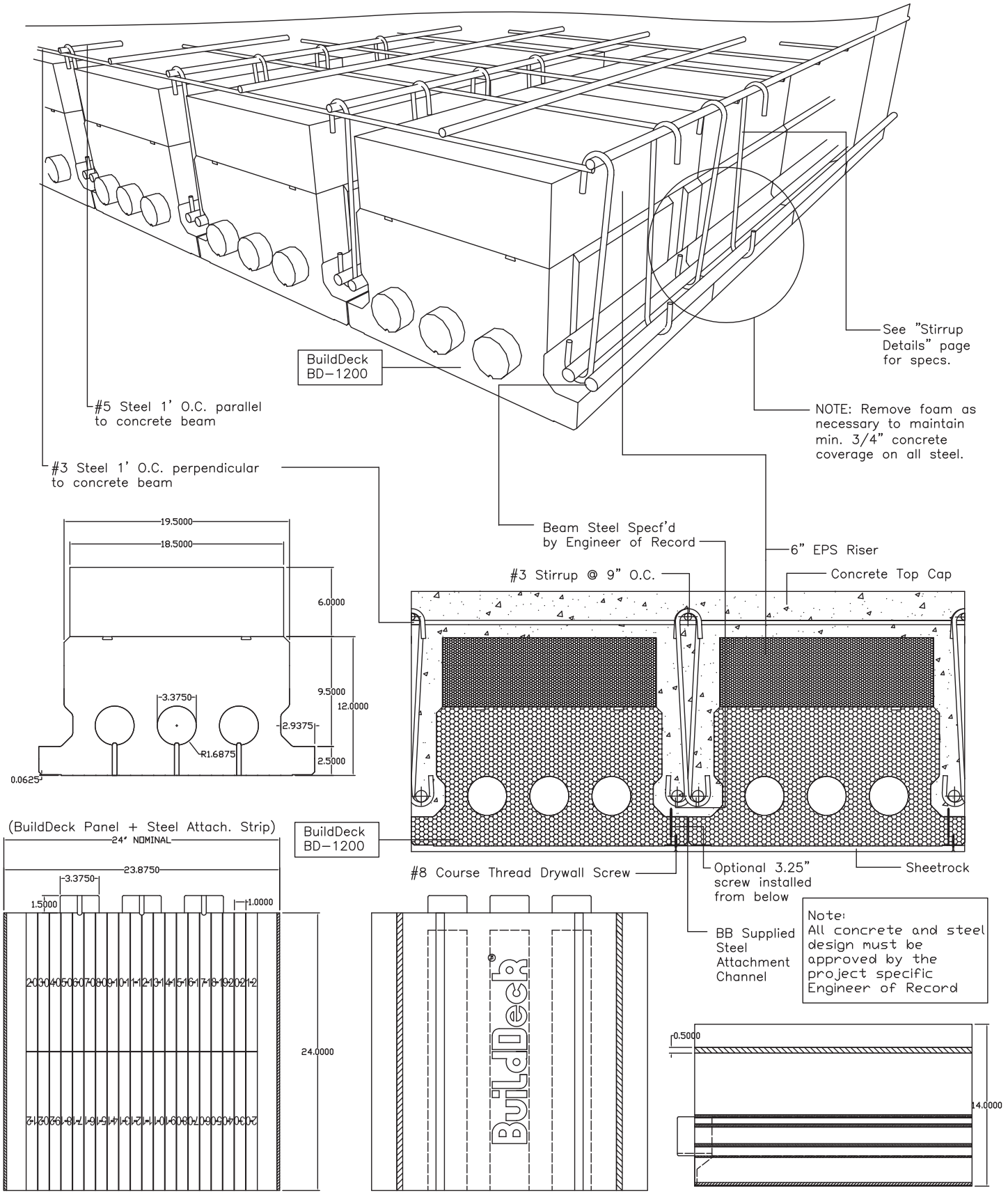

ROBERT F. OLECK
LICENSE No. 52514
STATE OF FLORIDA
PROFESSIONAL ENGINEER

BuildBlock® BUILDING SYSTEMS

9705 N. BROADWAY EXTENSION, SUITE 200, OKLAHOMA CITY, OK 73114
OFFICE: 405-840-3386 | TOLL FREE: 866-222-2575 | FAX: 831-597-0792
BUILDBLOCK.COM

BUILDDECK 12" + 6" FOAM TOP HAT

DATE/REV	11-17-09	SCALE	NTS	DETAIL SHEET
NOTES	BD-12+6			5I

CONSTRUCTION SHALL BE IN ACCORDANCE WITH ALL APPLICABLE LOCAL AND NATIONAL CODES. ALL DRAWINGS ARE SUBJECT TO CHANGE WITHOUT NOTICE.

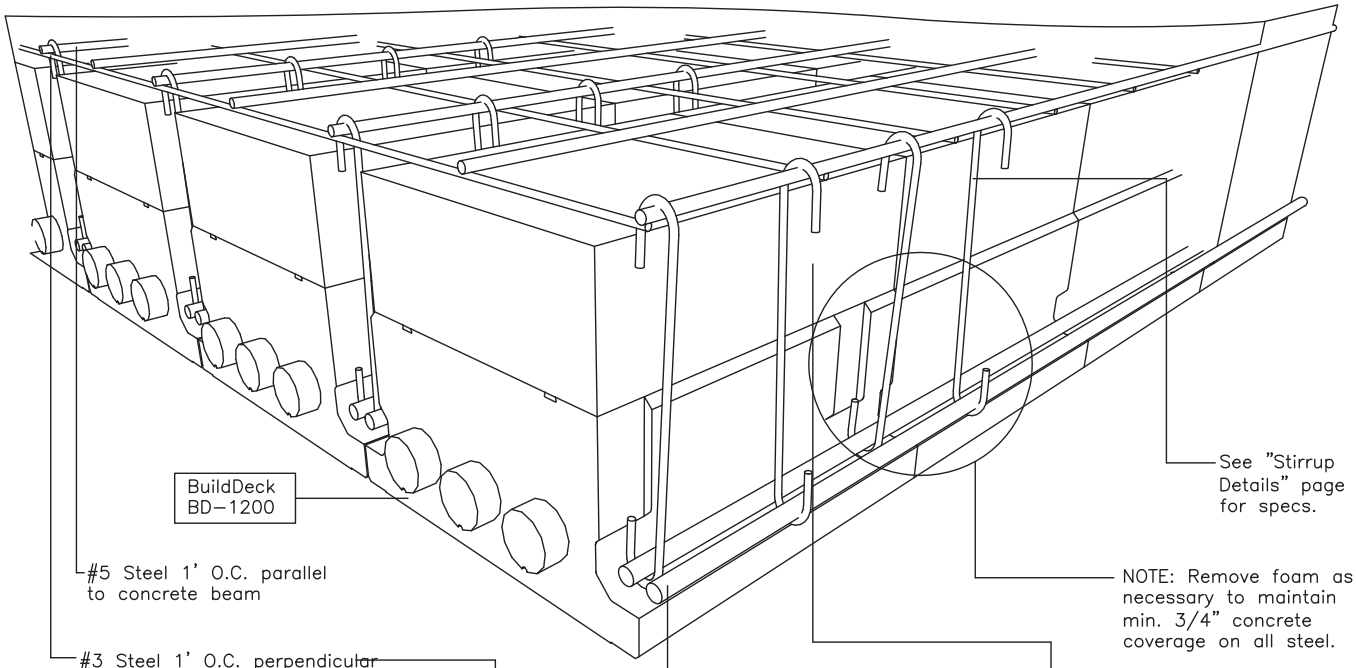

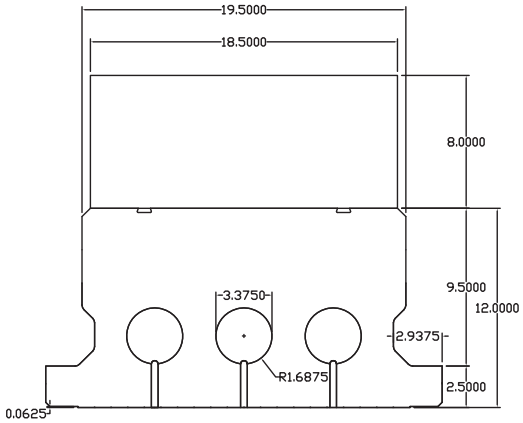

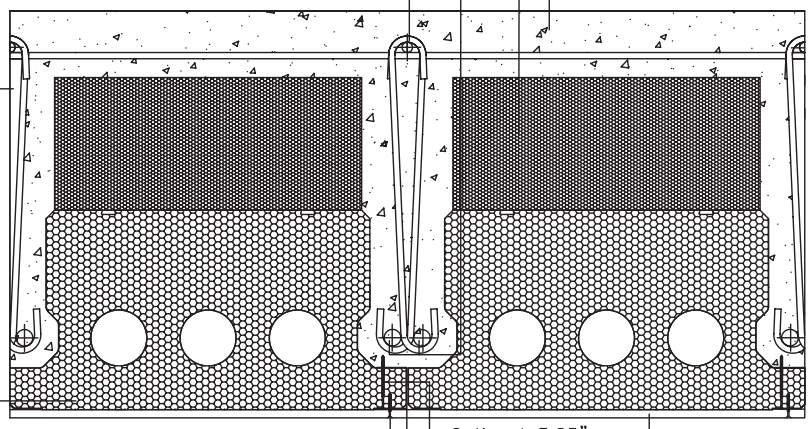

(BuildDeck Panel + Steel Attach. Strip)

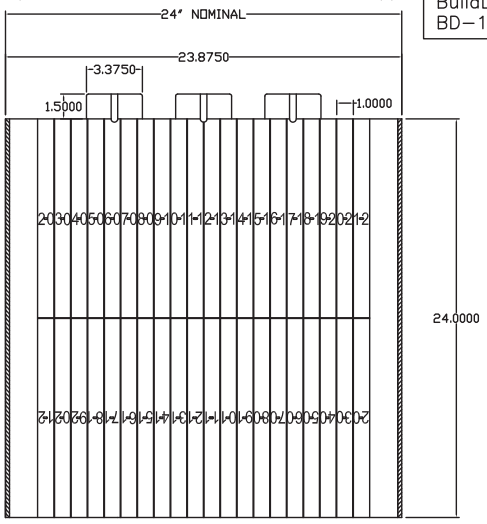

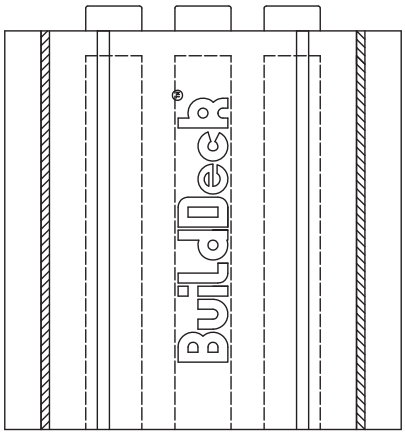

Note:
All concrete and steel design must be approved by the project specific Engineer of Record

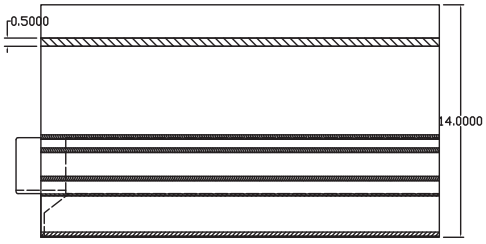

ROBERT F. OLECK
LICENSE
No. 52514
STATE OF FLORIDA
PROFESSIONAL ENGINEER

BuildBlock®
BUILDING SYSTEMS

9705 N. BROADWAY EXTENSION, SUITE 200, OKLAHOMA CITY, OK 73114
OFFICE: 405-840-3386 | TOLL FREE: 866-222-2575 | FAX: 831-597-0792
BUILDBLOCK.COM

BUILDDECK 12" + 8" FOAM TOP HAT

DATE/REV	11-17-09	SCALE	NTS	DETAIL SHEET
NOTES	BD-12+8			5J

CONSTRUCTION SHALL BE IN ACCORDANCE WITH ALL APPLICABLE LOCAL AND NATIONAL CODES. ALL DRAWINGS ARE SUBJECT TO CHANGE WITHOUT NOTICE.

RECOMMENDED STIRRUP FOR BD-1200+4″ RISER

RECOMMENDED STIRRUP FOR BD-1200+6″ RISER

RECOMMENDED STIRRUP FOR BD-1200+8″ RISER

Note:
All concrete and steel design must be approved by the project specific Engineer of Record

ROBERT F. OLECK
LICENSE No. 52514
STATE OF FLORIDA
PROFESSIONAL ENGINEER

BuildBlock® BUILDING SYSTEMS

9705 N. BROADWAY EXTENSION, SUITE 200, OKLAHOMA CITY, OK 73114
OFFICE: 405-840-3386 | TOLL FREE: 866-222-2575 | FAX: 831-597-0792
BUILDBLOCK.COM

BUILDDECK LONG SPAN STIRRUPS

DATE/REV	11-17-09	SCALE	NTS	DETAIL SHEET
NOTES				5K

CONSTRUCTION SHALL BE IN ACCORDANCE WITH ALL APPLICABLE LOCAL AND NATIONAL CODES. ALL DRAWINGS ARE SUBJECT TO CHANGE WITHOUT NOTICE.

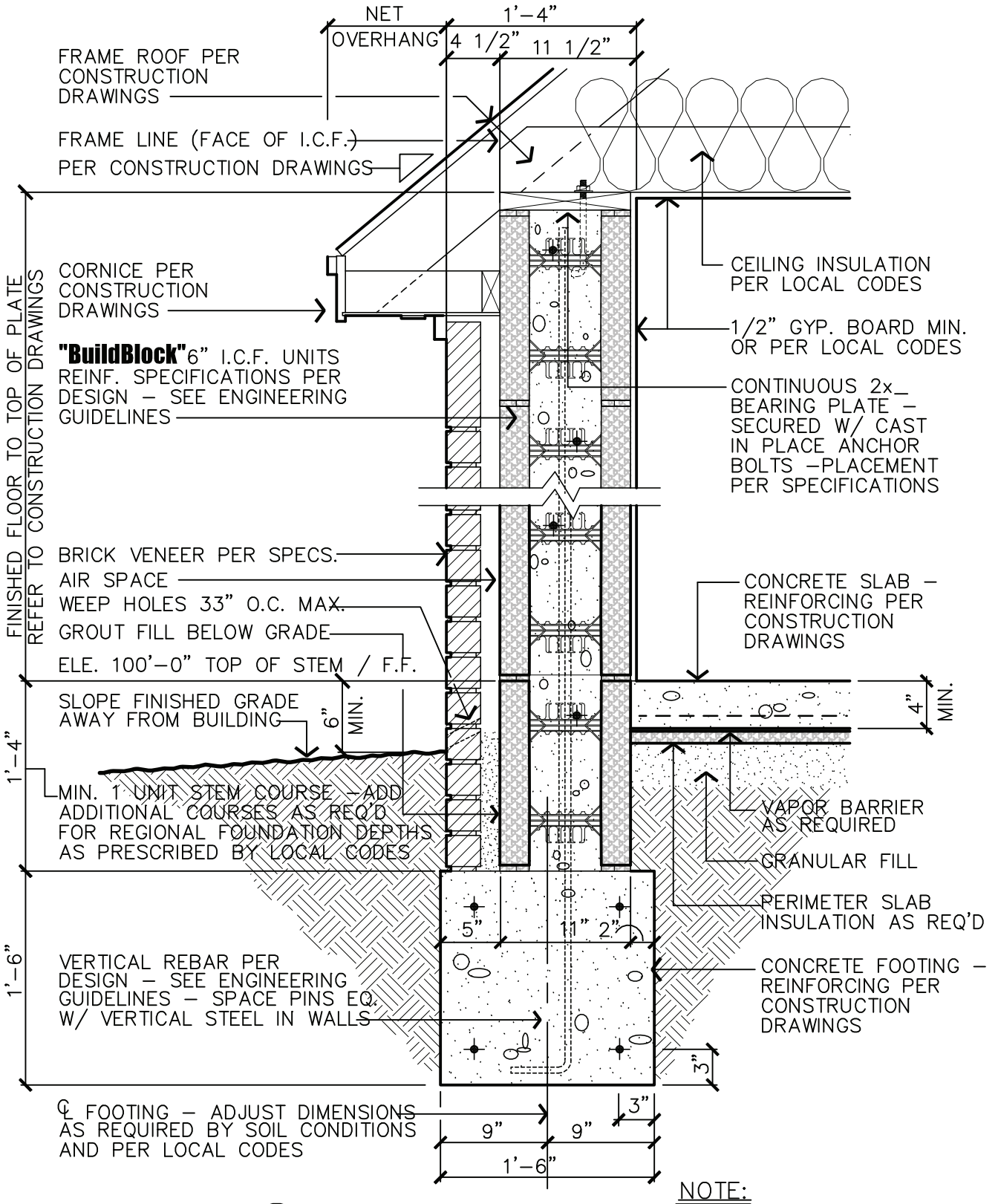

1/06 TYPICAL WALL SECTION
SCALE: 1" = 1'–0"

NOTE:
DUE TO VARIATIONS IN SELECTED PRINTER SETTINGS, NOTED SCALES MAY NO LONGER BE APPLICABLE

BuildBlock® BUILDING SYSTEMS

9705 N. BROADWAY EXTENSION, SUITE 200, OKLAHOMA CITY, OK 73114
OFFICE: 405-840-3386 | TOLL FREE: 866-222-2575 | FAX: 831-597-0792
BUILDBLOCK.COM

1-STORY BRICK VENEER

DATE/REV	10-31-06 /2	SCALE	NTS	DETAIL SHEET
NOTES				6

CONSTRUCTION SHALL BE IN ACCORDANCE WITH ALL APPLICABLE LOCAL AND NATIONAL CODES. ALL DRAWINGS ARE SUBJECT TO CHANGE WITHOUT NOTICE.

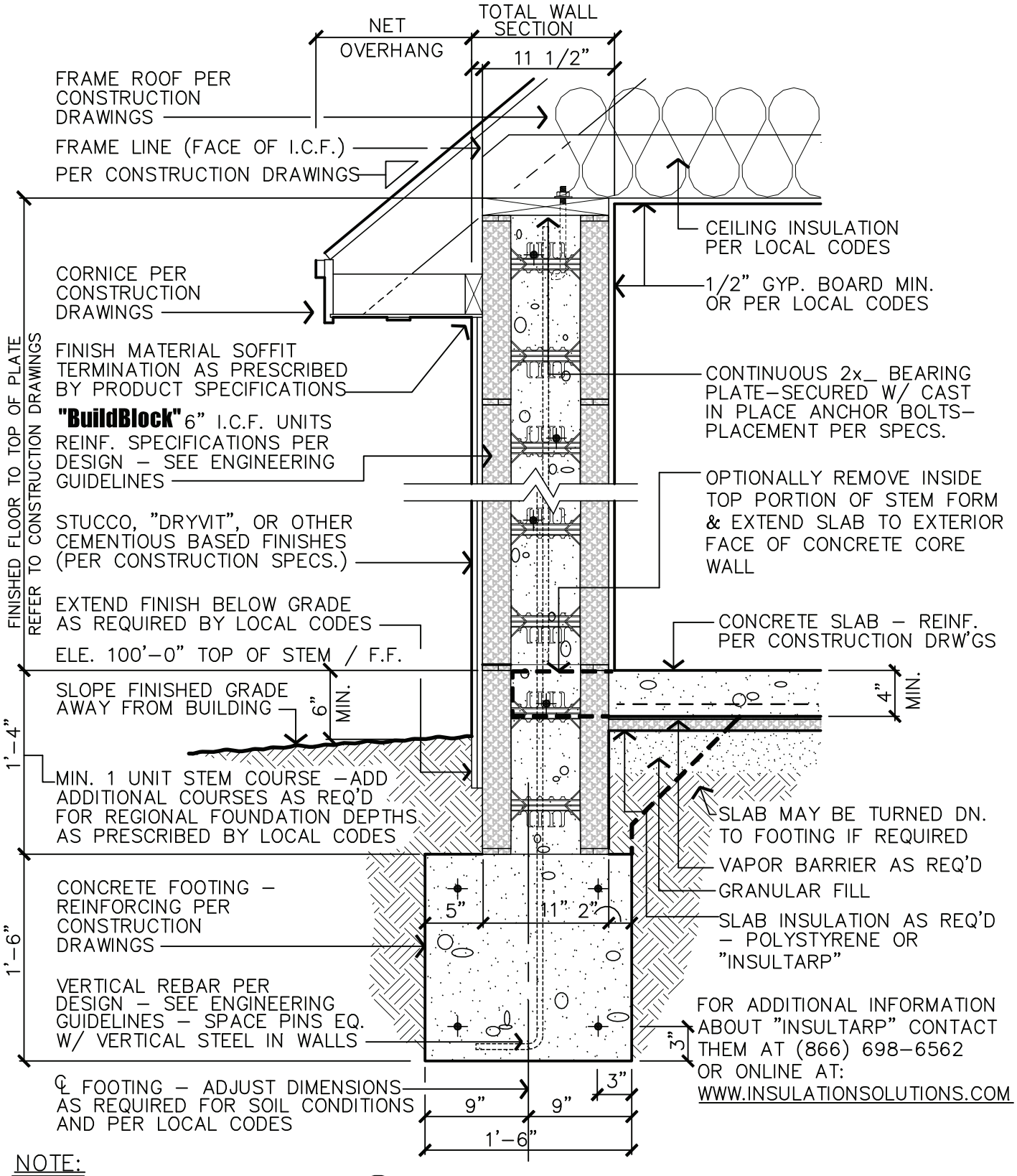

NOTE:
DUE TO VARIATIONS IN SELECTED PRINTER SETTINGS, NOTED SCALES MAY NO LONGER BE APPLICABLE

1/07 TYPICAL WALL SECTION
SCALE: 1" = 1'–0"

BuildBlock® BUILDING SYSTEMS

1-STORY STUCCO

DATE/REV	12-01-04 /1	SCALE	NTS	DETAIL SHEET
NOTES				7

9705 N. BROADWAY EXTENSION, SUITE 200, OKLAHOMA CITY, OK 73114
OFFICE: 405-840-3386 | TOLL FREE: 866-222-2575 | FAX: 831-597-0792
BUILDBLOCK.COM

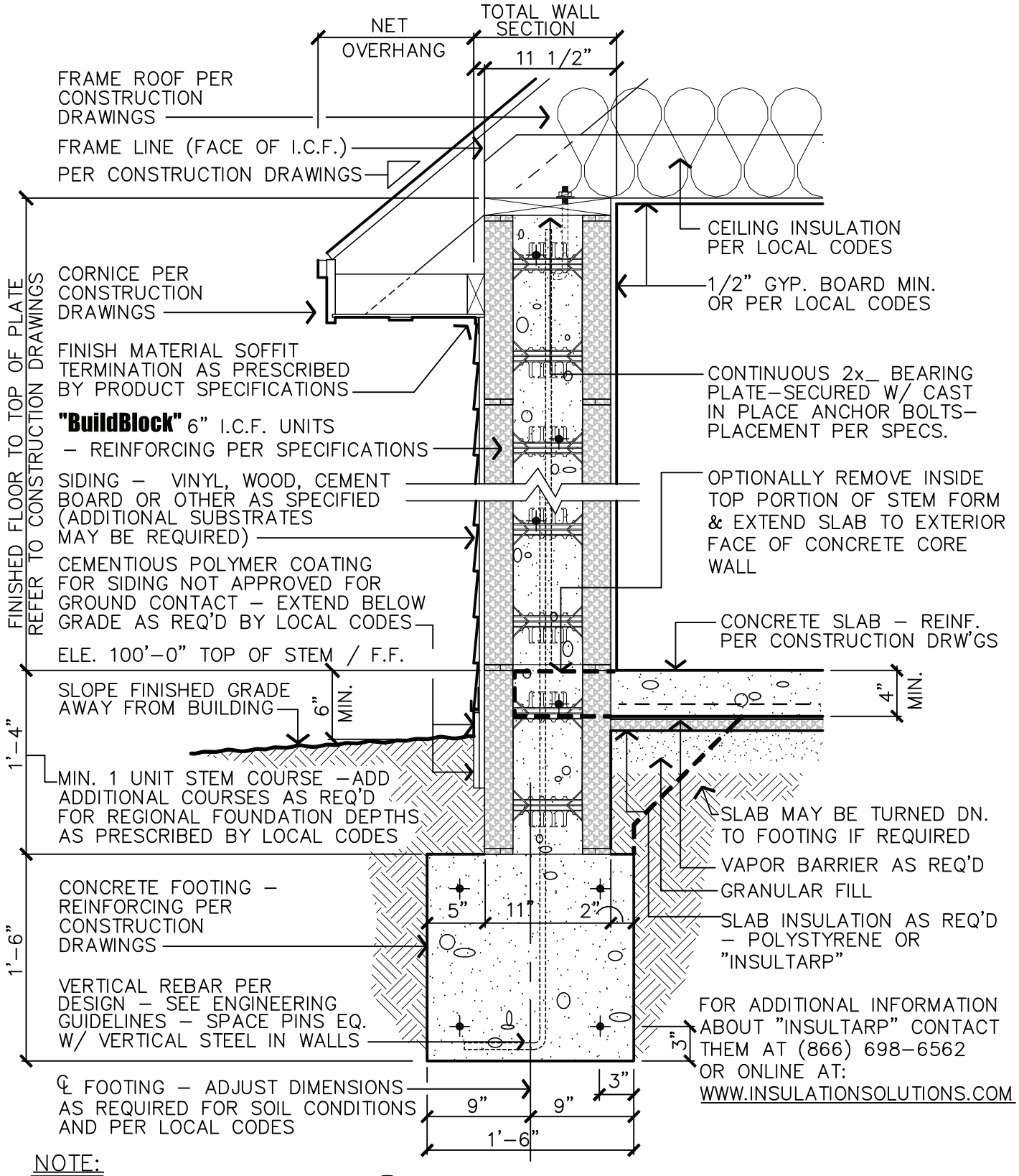

NOTE:
DUE TO VARIATIONS IN SELECTED PRINTER SETTINGS, NOTED SCALES MAY NO LONGER BE APPLICABLE

1/08 TYPICAL WALL SECTION
SCALE: 1" = 1'–0"

BuildBlock BUILDING SYSTEMS

1-STORY SIDING

DATE/REV	11-28-06 /2	SCALE	NTS	DETAIL SHEET
NOTES				8

9705 N. BROADWAY EXTENSION, SUITE 200, OKLAHOMA CITY, OK 73114
OFFICE: 405-840-3386 | TOLL FREE: 866-222-2575 | FAX: 831-597-0792
BUILDBLOCK.COM

CONSTRUCTION SHALL BE IN ACCORDANCE WITH ALL APPLICABLE LOCAL AND NATIONAL CODES. ALL DRAWINGS ARE SUBJECT TO CHANGE WITHOUT NOTICE.

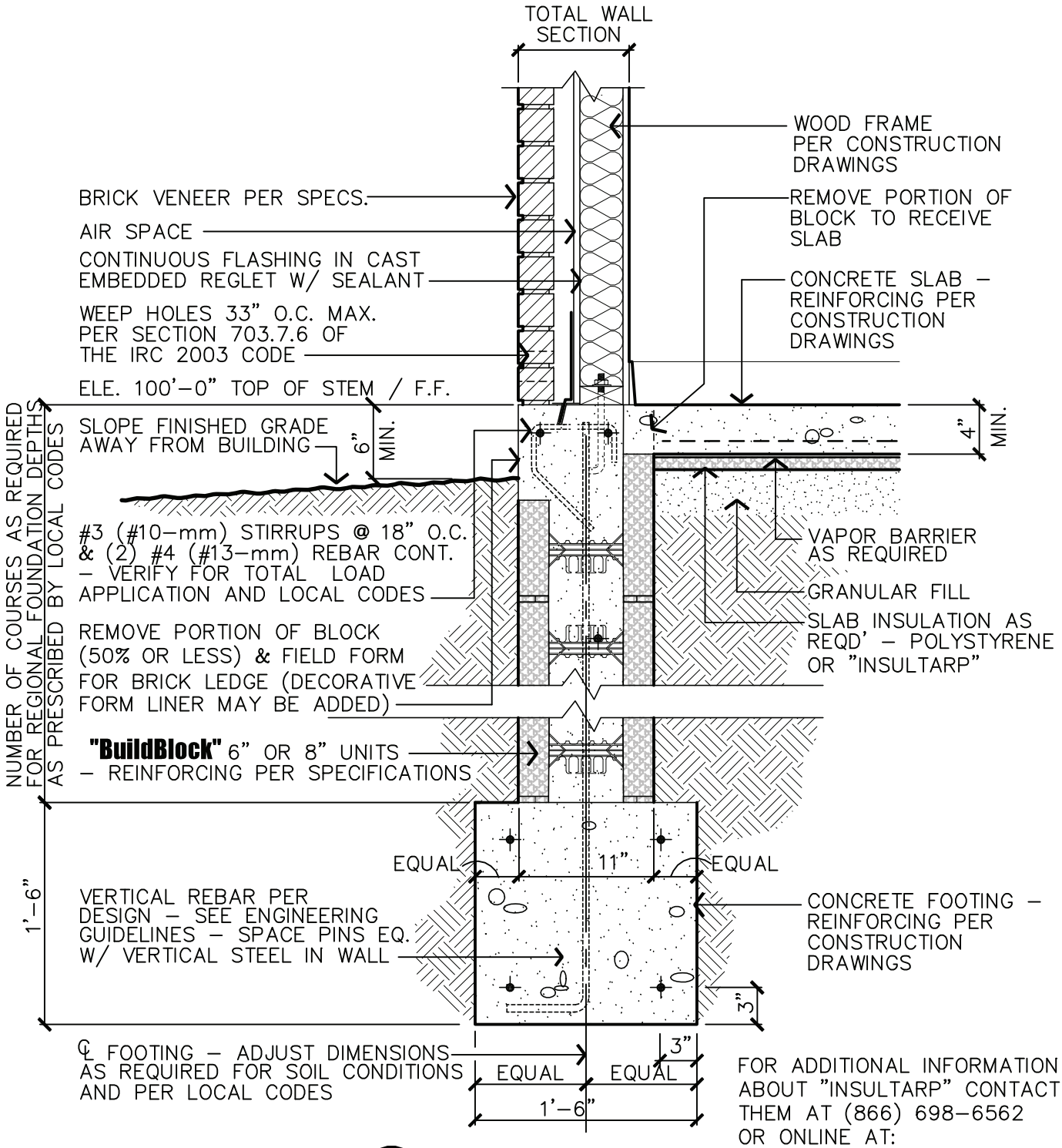

1/09 FOUNDATION DETAIL
SCALE: 1" = 1'–0"

FOR ADDITIONAL INFORMATION ABOUT "INSULTARP" CONTACT THEM AT (866) 698–6562 OR ONLINE AT: WWW.INSULATIONSOLUTIONS.COM

NOTE:
DUE TO VARIATIONS IN SELECTED PRINTER SETTINGS, NOTED SCALES MAY NO LONGER BE APPLICABLE

BuildBlock BUILDING SYSTEMS

9705 N. BROADWAY EXTENSION, SUITE 200, OKLAHOMA CITY, OK 73114
OFFICE: 405-840-3386 | TOLL FREE: 866-222-2575 | FAX: 831-597-0792
BUILDBLOCK.COM

WOOD FRAME ON BUILDBLOCK STEM

DATE/REV	11-28-06 /3	SCALE	NTS	DETAIL SHEET
NOTES				9

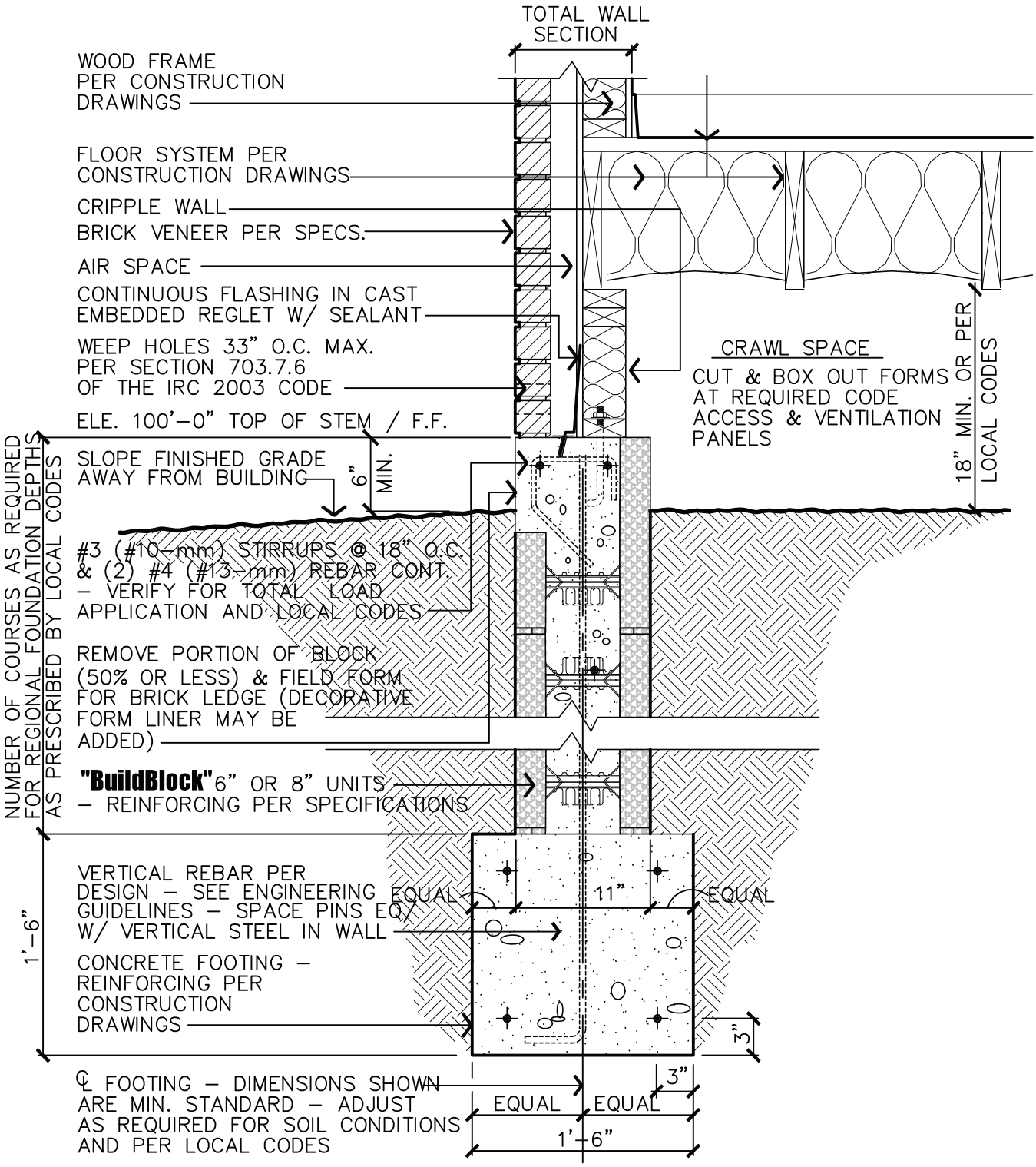

1/10 FOUNDATION DETAIL
SCALE: 1" = 1'-0"

NOTE:
DUE TO VARIATIONS IN SELECTED PRINTER SETTINGS, NOTED SCALES MAY NO LONGER BE APPLICABLE

BuildBlock® BUILDING SYSTEMS

9705 N. BROADWAY EXTENSION, SUITE 200, OKLAHOMA CITY, OK 73114
OFFICE: 405-840-3386 | TOLL FREE: 866-222-2575 | FAX: 831-597-0792
BUILDBLOCK.COM

BUILDBLOCK STEM & CRAWL SPACE

DATE/REV	11-28-06 /3	SCALE	NTS	DETAIL SHEET
NOTES				10

CONSTRUCTION SHALL BE IN ACCORDANCE WITH ALL APPLICABLE LOCAL AND NATIONAL CODES. ALL DRAWINGS ARE SUBJECT TO CHANGE WITHOUT NOTICE.

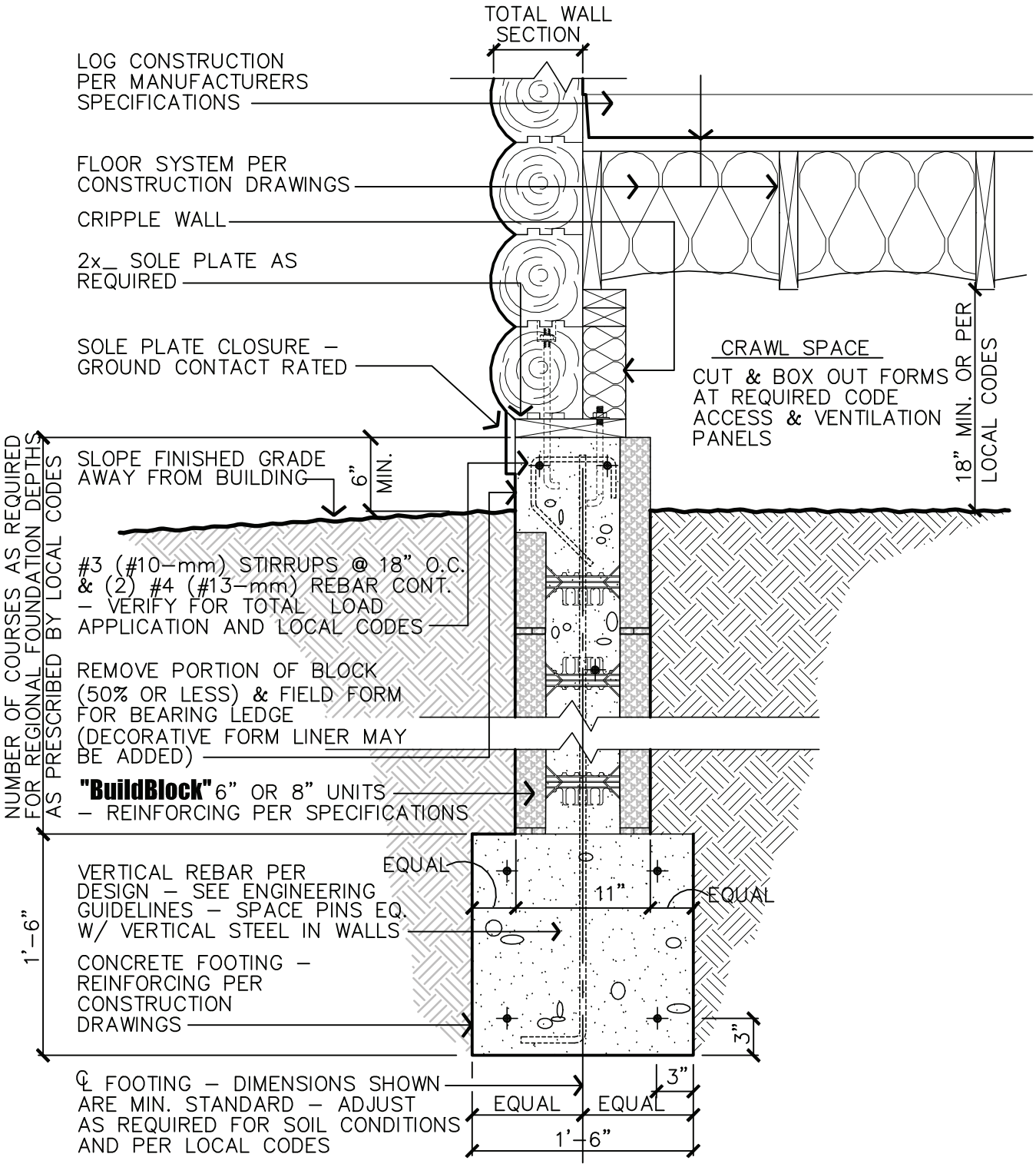

1/11 FOUNDATION DETAIL
SCALE: 1" = 1'–0"

NOTE:
DUE TO VARIATIONS IN SELECTED PRINTER SETTINGS, NOTED SCALES MAY NO LONGER BE APPLICABLE

BuildBlock BUILDING SYSTEMS

9705 N. BROADWAY EXTENSION, SUITE 200, OKLAHOMA CITY, OK 73114
OFFICE: 405-840-3386 | TOLL FREE: 866-222-2575 | FAX: 831-597-0792
BUILDBLOCK.COM

BUILDBLOCK STEM & LOG WALL

DATE/REV	11-28-06 /3	SCALE	NTS	DETAIL SHEET
NOTES				11

CONSTRUCTION SHALL BE IN ACCORDANCE WITH ALL APPLICABLE LOCAL AND NATIONAL CODES. ALL DRAWINGS ARE SUBJECT TO CHANGE WITHOUT NOTICE.

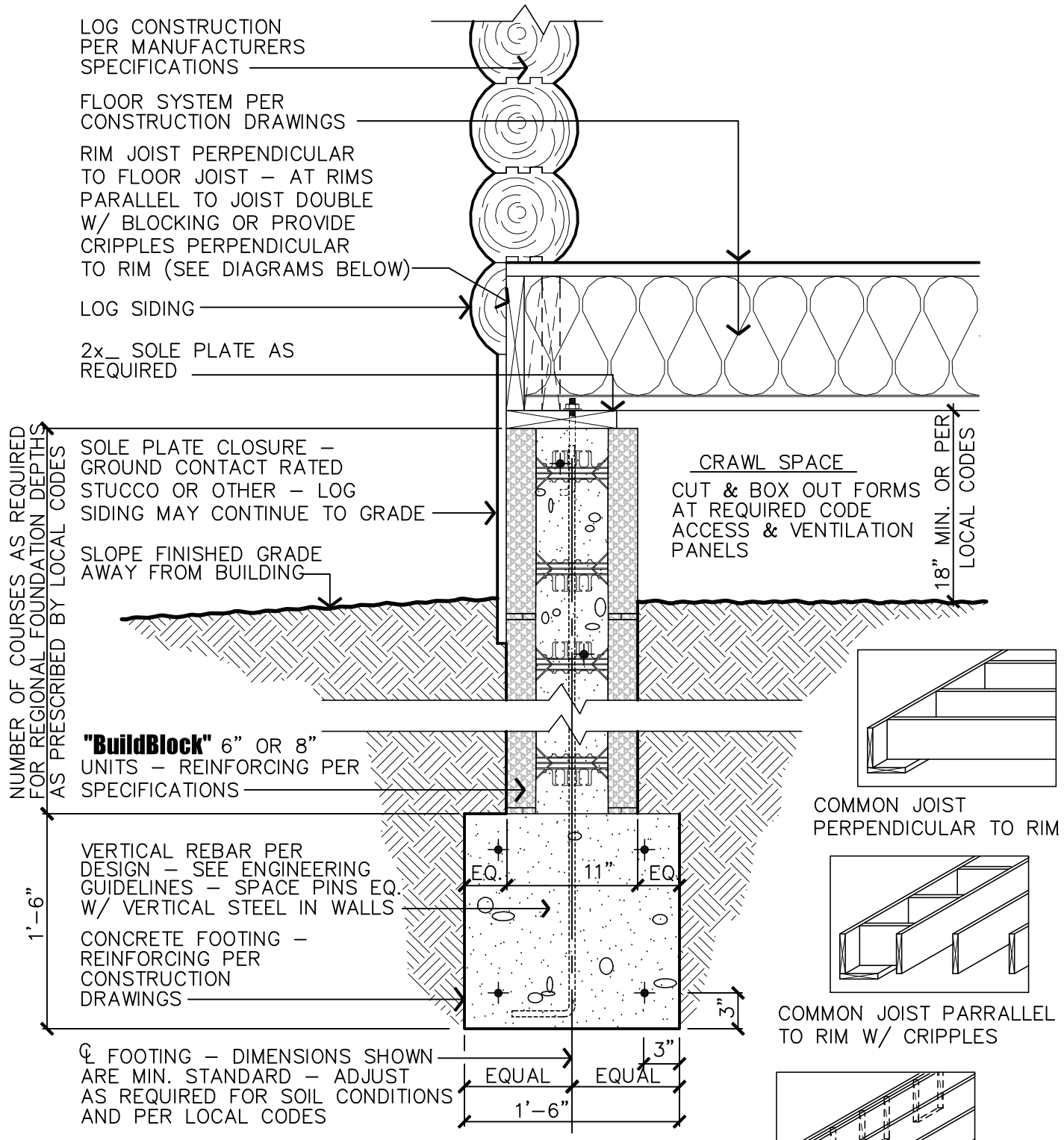

1 / 11a FOUNDATION DETAIL
SCALE: 1" = 1'–0"

NOTE:
DUE TO VARIATIONS IN SELECTED PRINTER SETTINGS, NOTED SCALES MAY NO LONGER BE APPLICABLE

BuildBlock® BUILDING SYSTEMS

9705 N. BROADWAY EXTENSION, SUITE 200, OKLAHOMA CITY, OK 73114
OFFICE: 405-840-3386 | TOLL FREE: 866-222-2575 | FAX: 831-597-0792
BUILDBLOCK.COM

BUILDBLOCK STEM & LOG WALL

DATE/REV	12-01-04 /1	SCALE	NTS	DETAIL SHEET
NOTES				11A

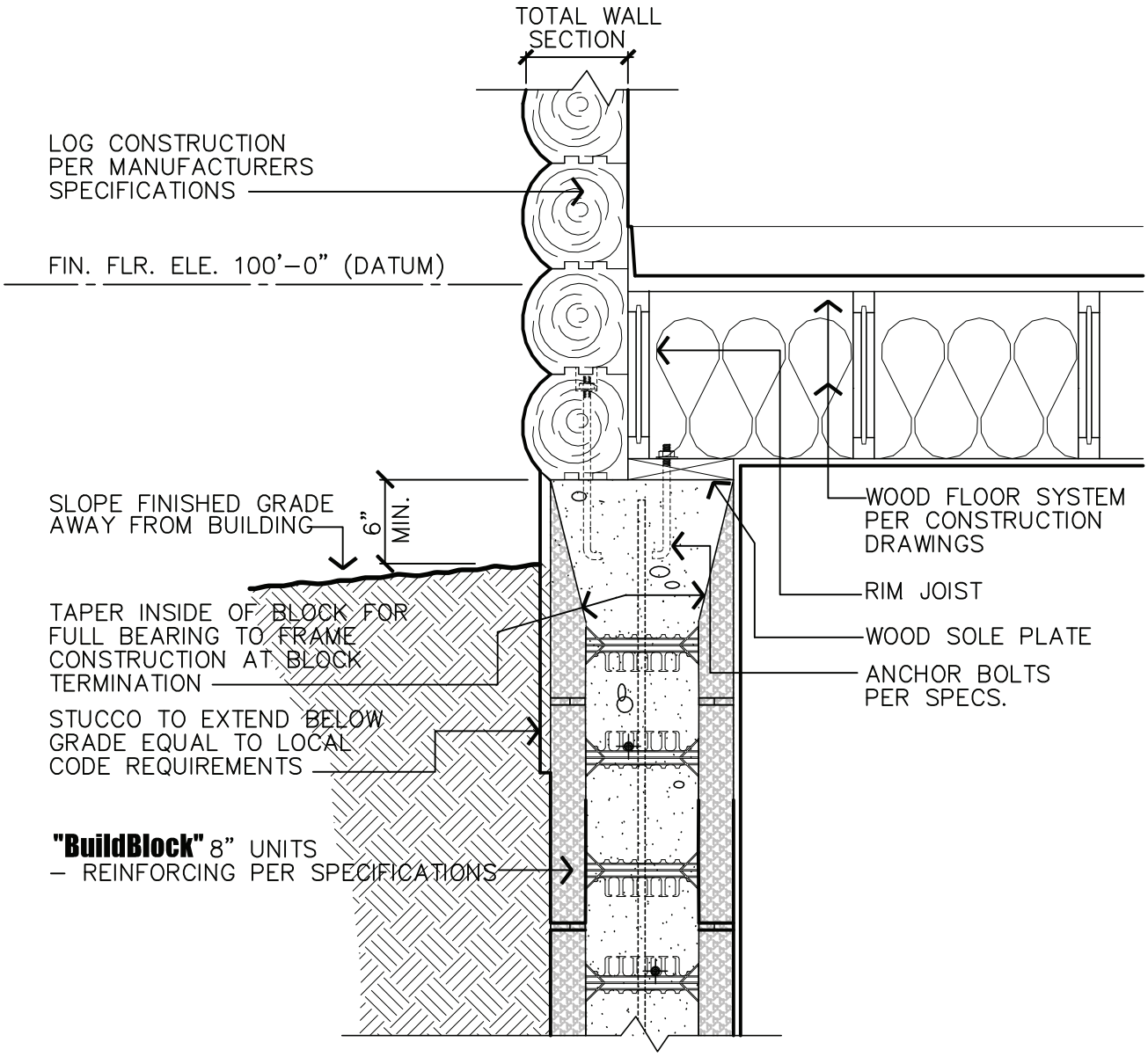

NOTE:
INSTALL APPROVED MEMBRANE WATER–PROOFING AT ALL SURFACES BELOW GRADE EXTEND 12" MIN. ABOVE FINAL GRADE

1/12 PARTIAL WALL SECTION
SCALE: 1" = 1'–0"

NOTE:
DUE TO VARIATIONS IN SELECTED PRINTER SETTINGS, NOTED SCALES MAY NO LONGER BE APPLICABLE

BuildBlock BUILDING SYSTEMS

9705 N. BROADWAY EXTENSION, SUITE 200, OKLAHOMA CITY, OK 73114
OFFICE: 405-840-3386 | TOLL FREE: 866-222-2575 | FAX: 831-597-0792
BUILDBLOCK.COM

BUILDBLOCK BASEMENT & LOG WALL

DATE/REV	12-01-04 /1	SCALE	NTS	DETAIL SHEET
NOTES				12

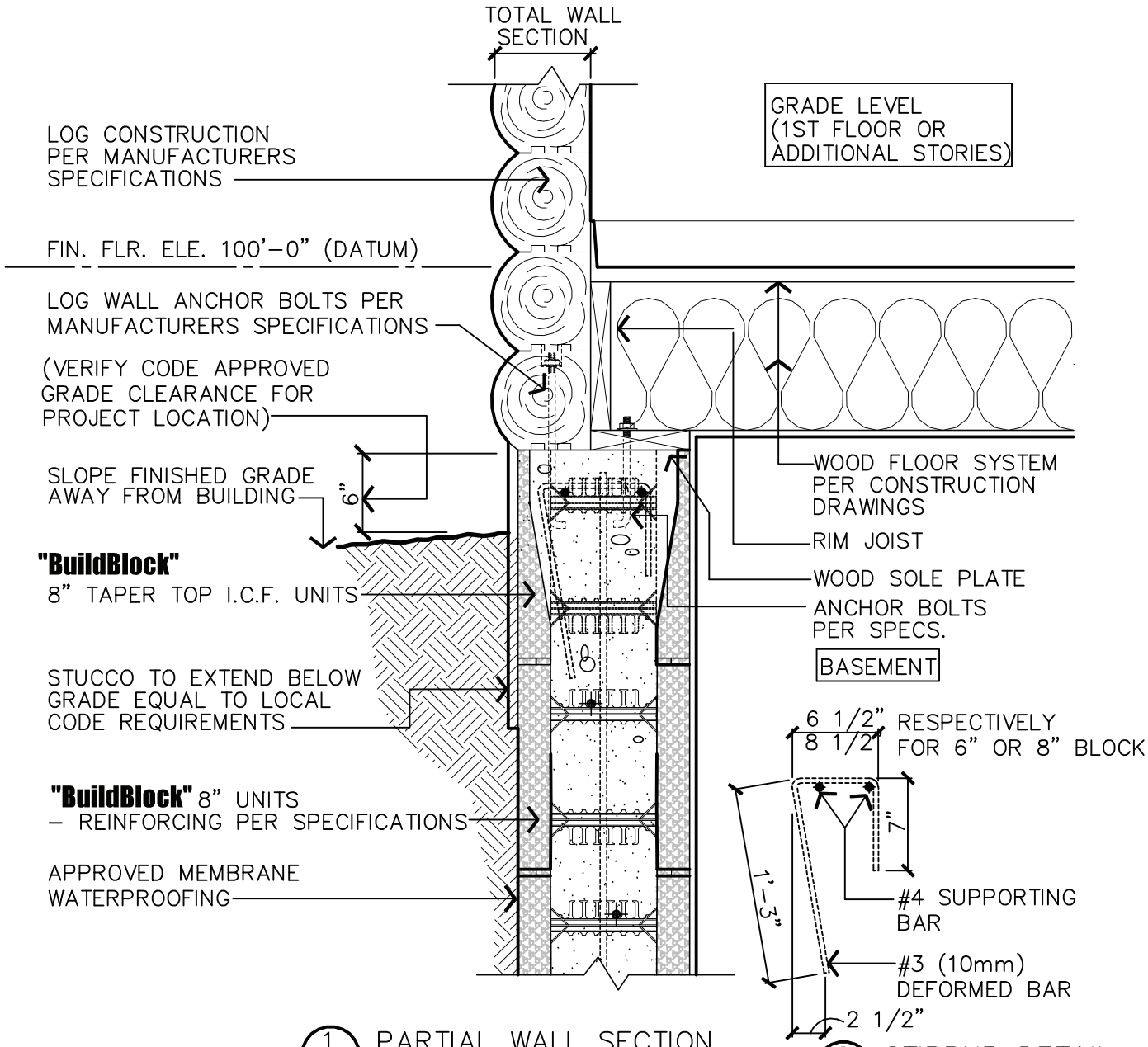

1 / 12a PARTIAL WALL SECTION
SCALE: 1" = 1'-0"

2 / 12a STIRRUP DETAIL
SCALE: 1" = 1'-0"

NOTES:

1. VARIATIONS IN IMPOSOSED LIVE & DEAD LOADS AND OTHER APPLICATION SPECIFIC VARIABLES REQUIRE ALL ASPECTS OF THE DETAILS SHOWN HERE TO BE DESIGNED AND /OR APPROVED BY A QUALIFIED ENGINEER
2. ALL CONSTRUCTION SHALL BE IN ACCORDANCE W/ THE SPECIFICATION OF AND THE RESPONSIBILITY OF A QUALIFIED STRUCTRURAL ENGINEER.
3. INSTALL APPROVED MEMBRANE WATER-PROOFING AT ALL SURFACES BELOW GRADE EXTEND 12" MIN. ABOVE FINAL GRADE

MINIMUM SPACING:

1. VENEER – 1000 lb/ft (15kN/m @ 18" (450mm)
2. VENEER – 1500 lb/ft (22kN/m @ 12" (300mm)

NOTE:

DUE TO VARIATIONS IN SELECTED PRINTER SETTINGS, NOTED SCALES MAY NO LONGER BE APPLICABLE

BuildBlock BUILDING SYSTEMS

9705 N. BROADWAY EXTENSION, SUITE 200, OKLAHOMA CITY, OK 73114
OFFICE: 405-840-3386 | TOLL FREE: 866-222-2575 | FAX: 831-597-0792
BUILDBLOCK.COM

BASEMENT, TAPER UNIT & LOG WALL

DATE/REV	9-30-07 /2	SCALE	NTS	DETAIL SHEET
NOTES				12A

CONSTRUCTION SHALL BE IN ACCORDANCE WITH ALL APPLICABLE LOCAL AND NATIONAL CODES. ALL DRAWINGS ARE SUBJECT TO CHANGE WITHOUT NOTICE.

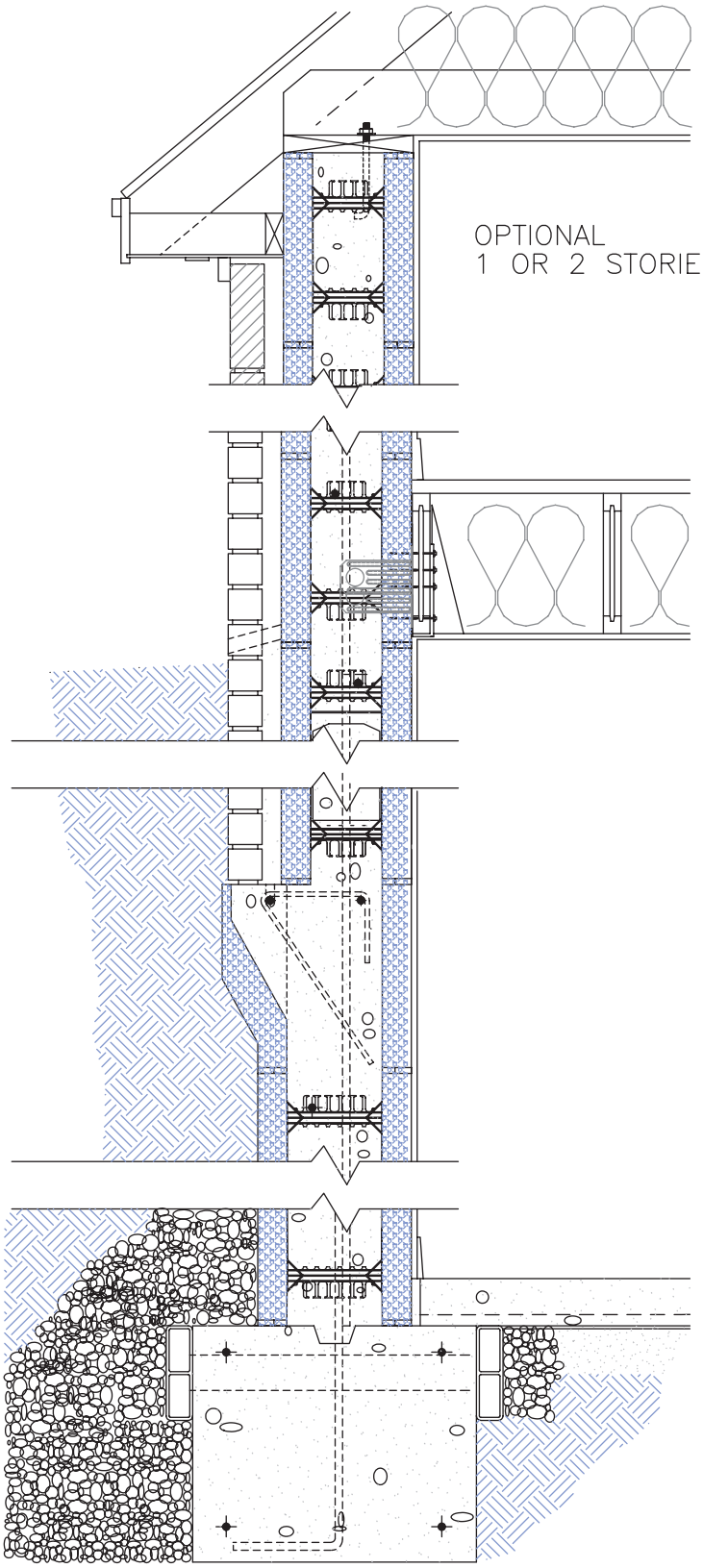

1/06 (CORNICE PORTION OF WALL SECTION)

TYPICAL CONNECTION AT CORNICE

OPTIONAL
1 OR 2 STORIES ABOVE

1/14

TYPICAL FLOOR INTERSECTION

ALSO SEE ALTERNATE SECTION DETAIL 2–14

REPEAT THIS DETAIL FOR 2ND FLOOR IF NEEDED

1/16

"BuildBlock"
LEDGE BLOCK

ALSO SEE ALTERNATE LEDGE FORMING DETAILS
1–19 FEILD FORMED AND
2–19 STEEL ANGLE
1–16 STIRRUP DETAIL (TYP.)

1/20

BASEMENT FOUNDATION

1/13 TYPICAL WALL SECTION

SCALE: 3/4" = 1'–0"

NOTE:
DUE TO VARIATIONS IN SELECTED PRINTER SETTINGS, NOTED SCALES MAY NO LONGER BE APPLICABLE

BuildBlock® BUILDING SYSTEMS

9705 N. BROADWAY EXTENSION, SUITE 200, OKLAHOMA CITY, OK 73114
OFFICE: 405-840-3386 | TOLL FREE: 866-222-2575 | FAX: 831-597-0792
BUILDBLOCK.COM

BASEMENT WITH BRICK 1 OR 2 STORY BUILDBLOCK ABOVE

DATE/REV	11-17-09	SCALE	NTS	DETAIL SHEET
NOTES				13

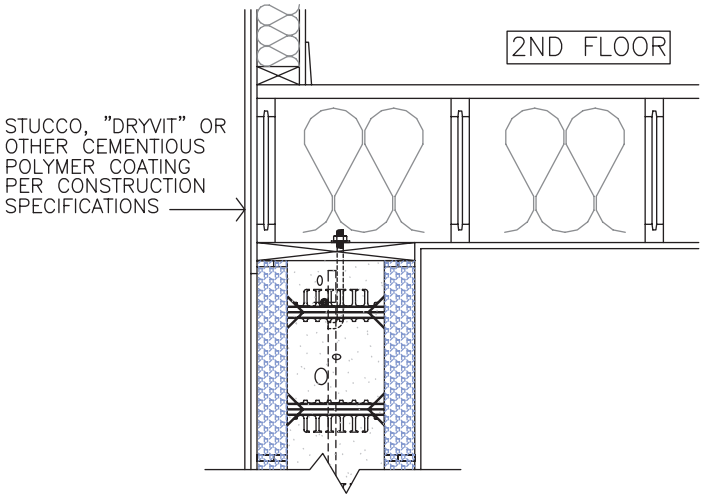

1/14a
FRAME FLOOR TOP BEARING

ALTERNATE

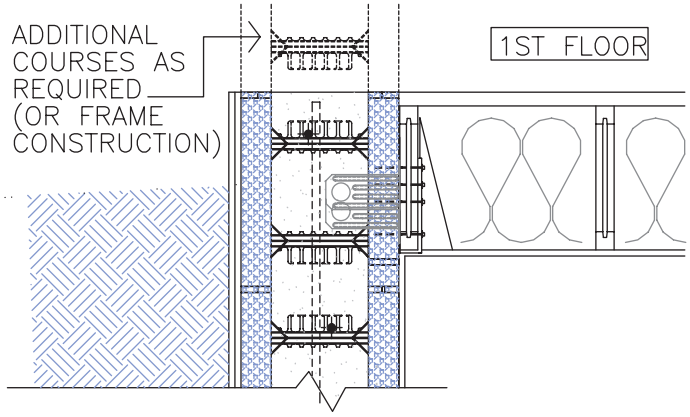

1/14 SIMILAR
TYPICAL FLOOR INTERSECTION
ALSO SEE ALTERNATE SECTION DETAIL 2–14 (SIM.)

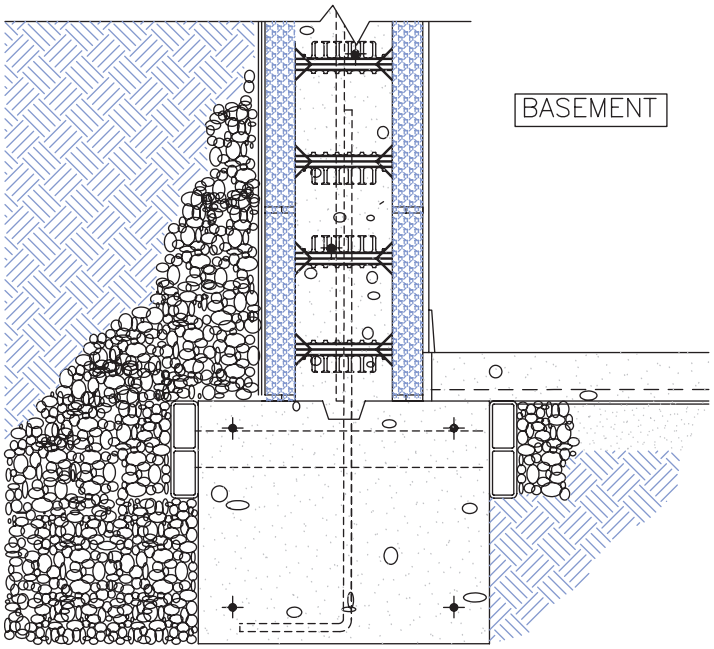

1/20
BASEMENT FOUNDATION

1/13a
TYPICAL WALL SECTION
SCALE: 3/4" = 1'–0"

NOTE:
DUE TO VARIATIONS IN SELECTED PRINTER SETTINGS, NOTED SCALES MAY NO LONGER BE APPLICABLE

BuildBlock® BUILDING SYSTEMS

9705 N. BROADWAY EXTENSION, SUITE 200, OKLAHOMA CITY, OK 73114
OFFICE: 405-840-3386 | TOLL FREE: 866-222-2575 | FAX: 831-597-0792
BUILDBLOCK.COM

BASEMENT WITH STUCCO 1 OR 2 STORIES ABOVE

DATE/REV	11-17-09	SCALE	NTS	DETAIL SHEET
NOTES				13A

CONSTRUCTION SHALL BE IN ACCORDANCE WITH ALL APPLICABLE LOCAL AND NATIONAL CODES. ALL DRAWINGS ARE SUBJECT TO CHANGE WITHOUT NOTICE.

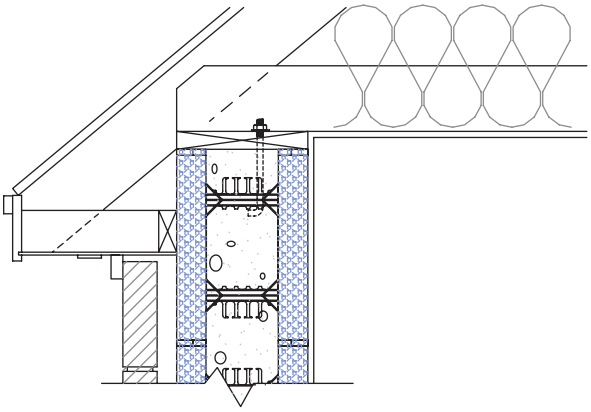

1/06 (CORNICE PORTION OF WALL SECTION)

TYPICAL CONNECTION AT CORNICE

2/13b BRICK OPTION

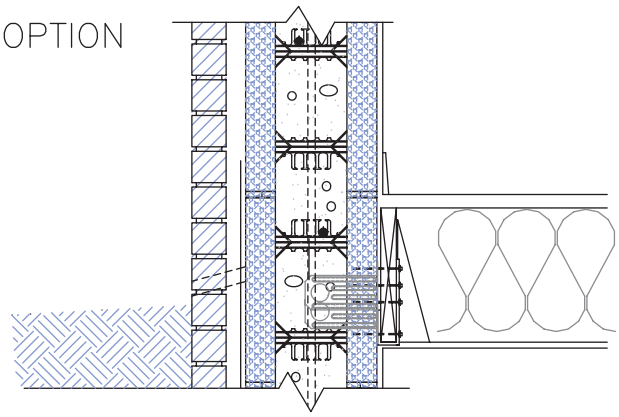

1/14

TYPICAL FLOOR INTERSECTION

ALSO SEE ALTERNATE SECTION DETAIL 2–14

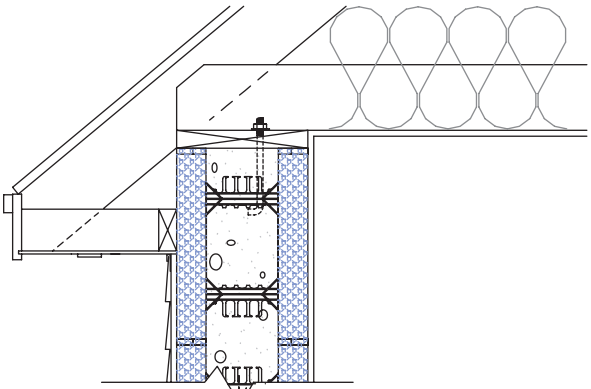

1/08 (CORNICE PORTION OF WALL SECTION)

TYPICAL CONNECTION AT CORNICE

1/13b SIDING OPTION

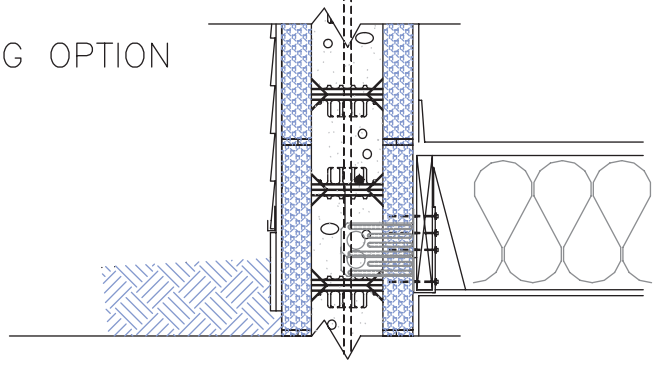

1/14

TYPICAL FLOOR INTERSECTION

ALSO SEE ALTERNATE SECTION DETAIL 2–14

NOTE:

DUE TO VARIATIONS IN SELECTED PRINTER SETTINGS, NOTED SCALES MAY NO LONGER BE APPLICABLE

BuildBlock® BUILDING SYSTEMS

9705 N. BROADWAY EXTENSION, SUITE 200, OKLAHOMA CITY, OK 73114
OFFICE: 405-840-3386 | TOLL FREE: 866-222-2575 | FAX: 831-597-0792
BUILDBLOCK.COM

WALL DETAIL W/SILL PLATE & SLOPE ROOF

DATE/REV	11-17-09	SCALE	NTS	DETAIL SHEET
NOTES				13B

CONSTRUCTION SHALL BE IN ACCORDANCE WITH ALL APPLICABLE LOCAL AND NATIONAL CODES. ALL DRAWINGS ARE SUBJECT TO CHANGE WITHOUT NOTICE.

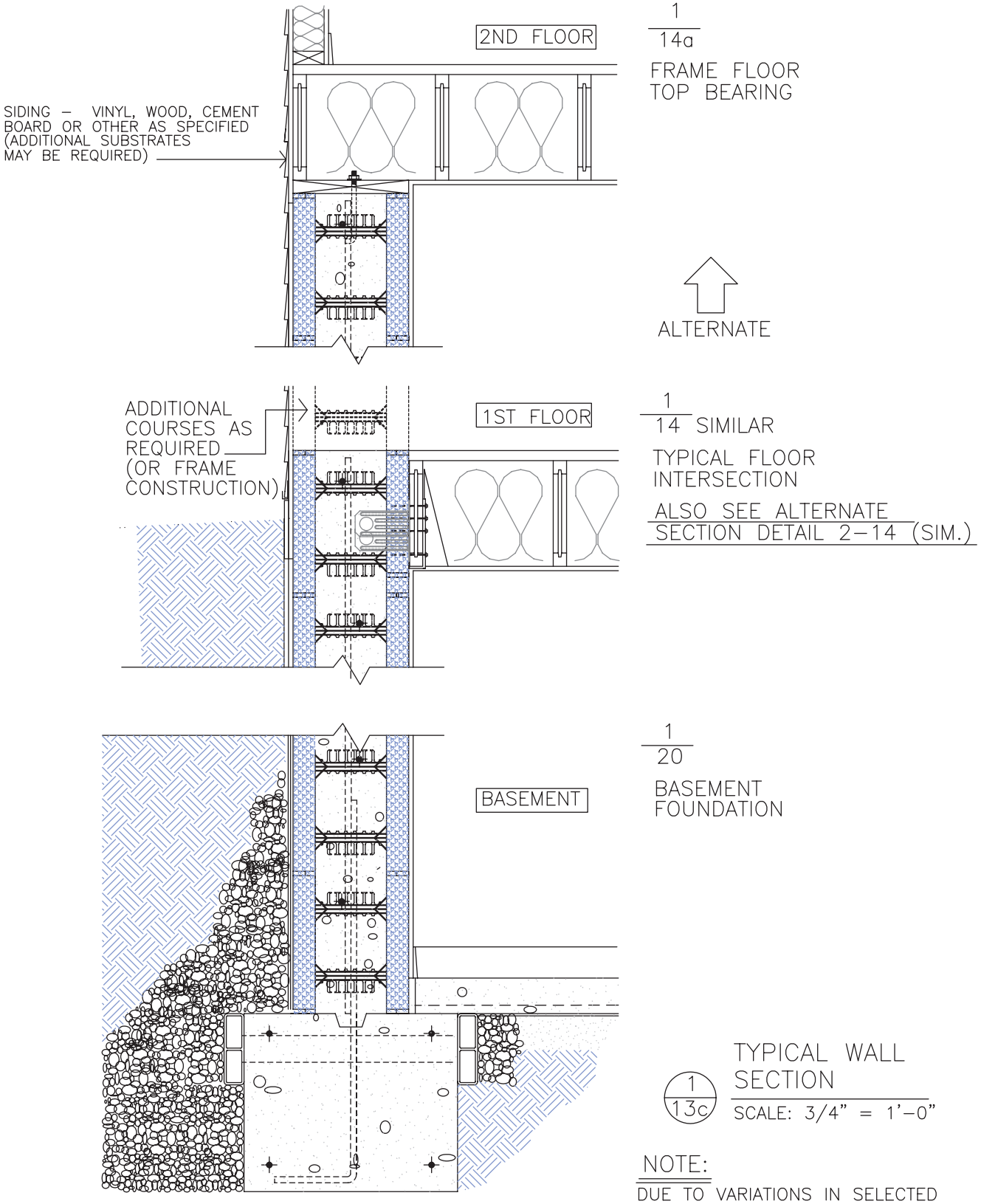

NOTE:
DUE TO VARIATIONS IN SELECTED PRINTER SETTINGS, NOTED SCALES MAY NO LONGER BE APPLICABLE

BuildBlock® BUILDING SYSTEMS

BASEMENT WITH SIDING ON ONE STORY BUILDBLOCK AND SECOND FLOOR FRAME ABOVE

DATE/REV	11-17-09	SCALE	NTS	DETAIL SHEET
NOTES				13C

9705 N. BROADWAY EXTENSION, SUITE 200, OKLAHOMA CITY, OK 73114
OFFICE: 405-840-3386 | TOLL FREE: 866-222-2575 | FAX: 831-597-0792
BUILDBLOCK.COM

CONSTRUCTION SHALL BE IN ACCORDANCE WITH ALL APPLICABLE LOCAL AND NATIONAL CODES. ALL DRAWINGS ARE SUBJECT TO CHANGE WITHOUT NOTICE.

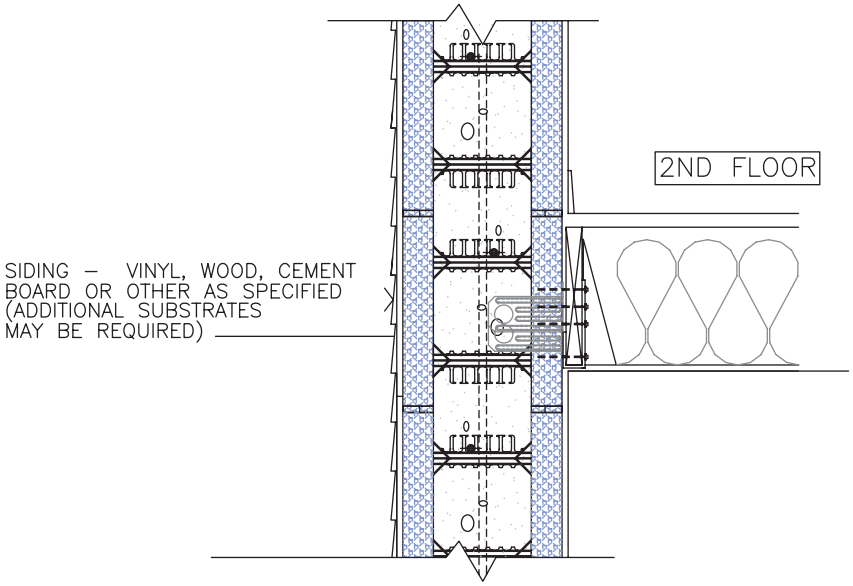

ALTERNATE

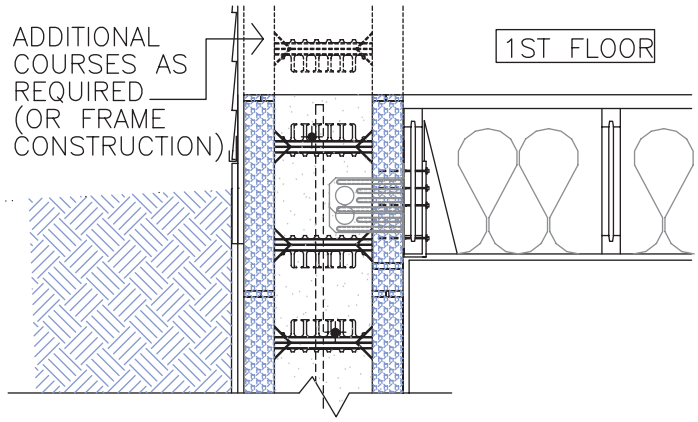

1/14 SIMILAR

TYPICAL FLOOR INTERSECTION

ALSO SEE ALTERNATE SECTION DETAIL 2–14 (SIM.)

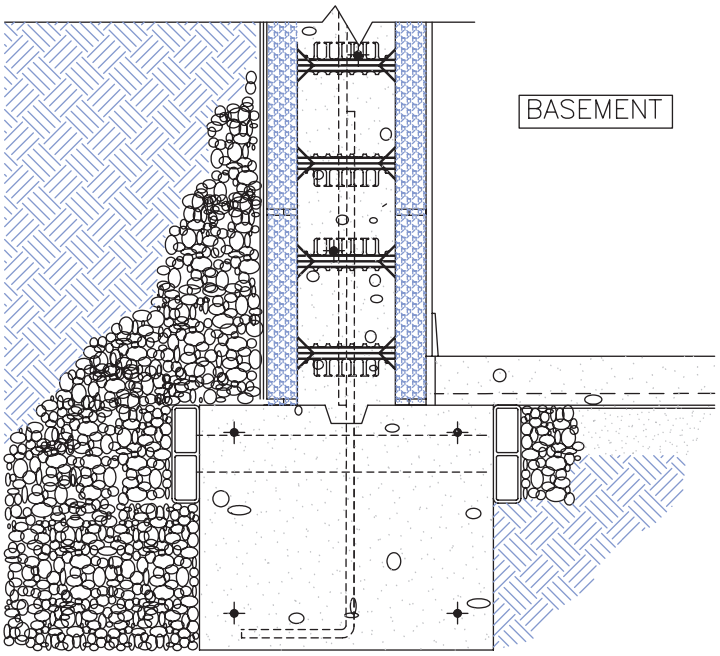

1/20

BASEMENT FOUNDATION

1/13d

TYPICAL WALL SECTION

SCALE: 3/4" = 1'–0"

NOTE:

DUE TO VARIATIONS IN SELECTED PRINTER SETTINGS, NOTED SCALES MAY NO LONGER BE APPLICABLE

BuildBlock® BUILDING SYSTEMS

9705 N. BROADWAY EXTENSION, SUITE 200, OKLAHOMA CITY, OK 73114
OFFICE: 405-840-3386 | TOLL FREE: 866-222-2575 | FAX: 831-597-0792
BUILDBLOCK.COM

BASEMENT WITH 1 OR 2 STORY BUILDBLOCK ABOVE

DATE/REV	11-17-09	SCALE	NTS	DETAIL SHEET
NOTES				13D

CONSTRUCTION SHALL BE IN ACCORDANCE WITH ALL APPLICABLE LOCAL AND NATIONAL CODES. ALL DRAWINGS ARE SUBJECT TO CHANGE WITHOUT NOTICE.

NOTE:
INSTALL APPROVED MEMBRANE WATER-PROOFING AT ALL SURFACES BELOW GRADE EXTEND 12" MIN. ABOVE FINAL GRADE

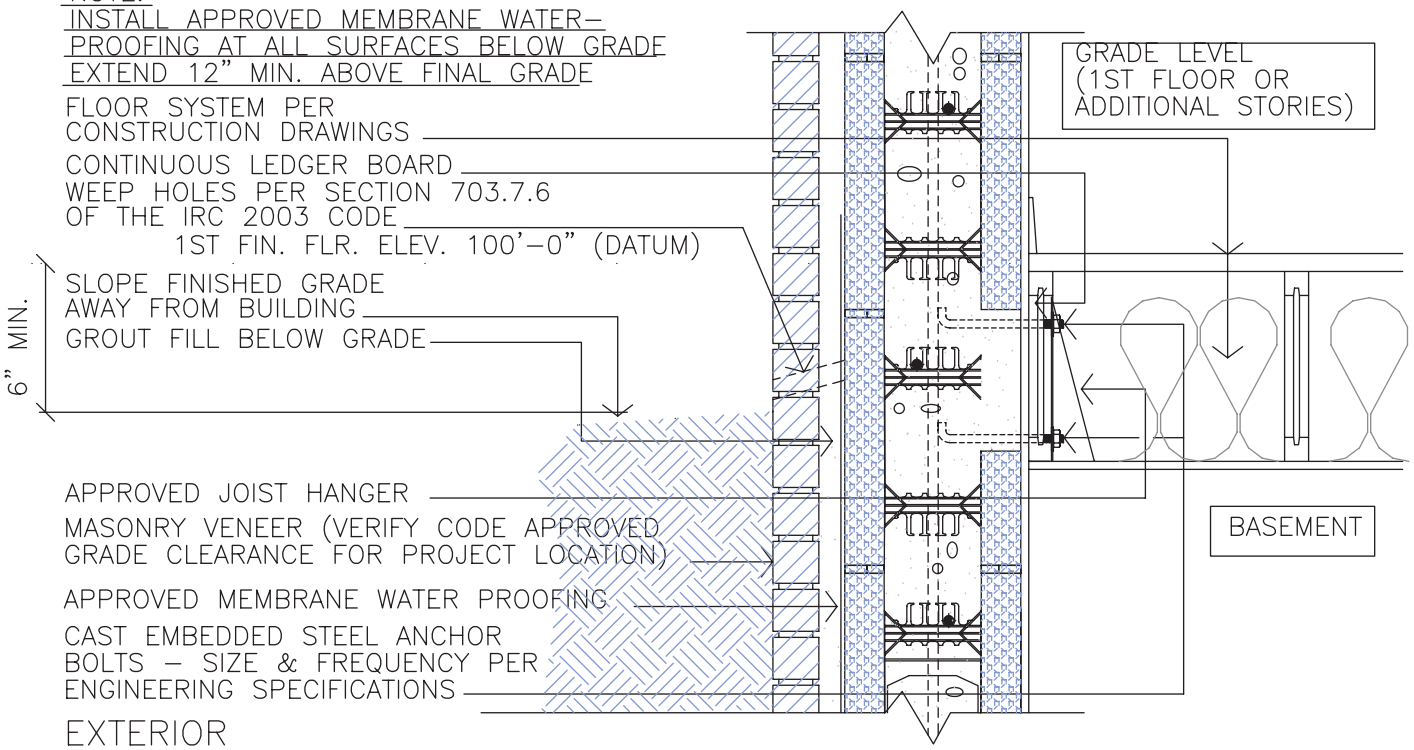

2/14 ALTERNATE SECTION DETAIL
SCALE: 1" = 1'-0"

EXTERIOR APPLICATIONS

FLOOR SYSTEM FOR EXTERIOR APPLICATION SUCH AS WOOD OR METAL DECKS MAY USE A SIMILAR ANCHORING SYSTEM TO THOSE SHOWN ON THIS DETAIL SHEET

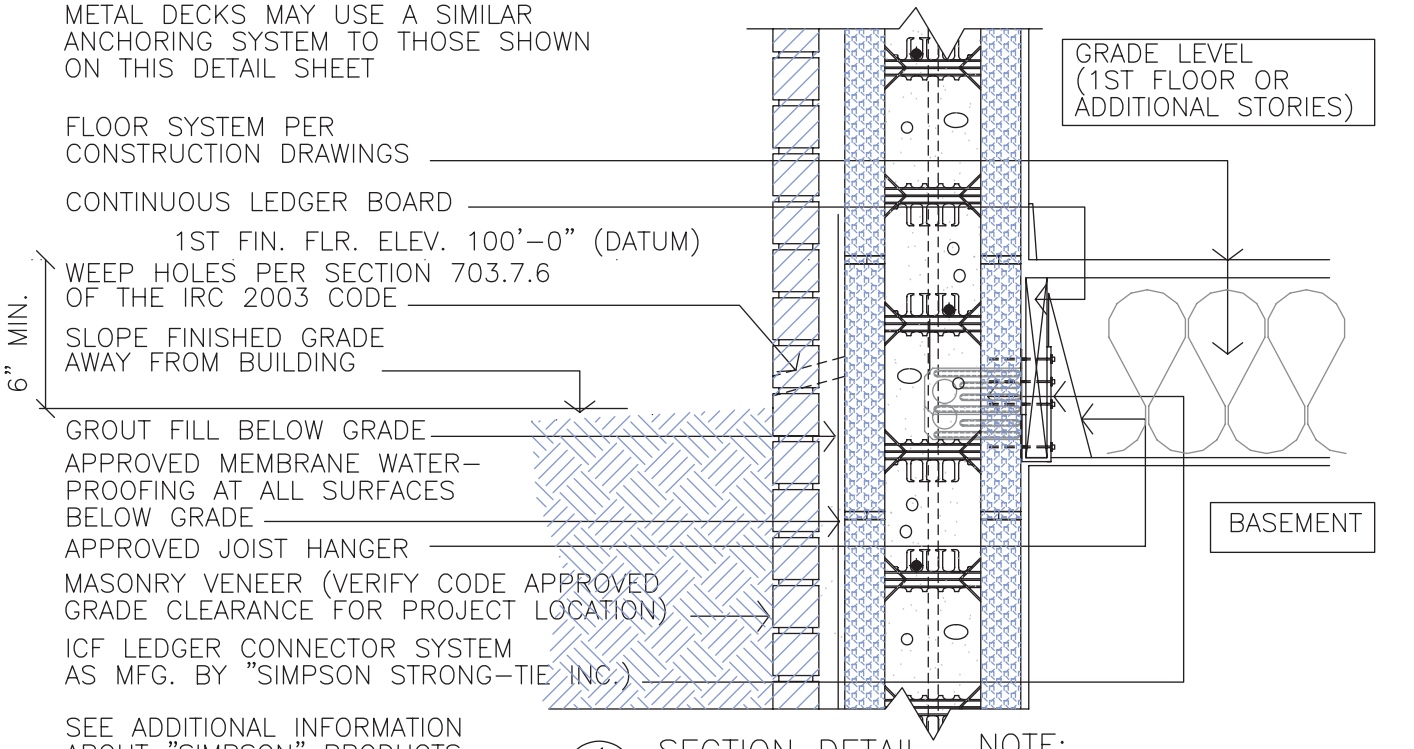

1/14 SECTION DETAIL
SCALE: 1" = 1'-0"

SEE ADDITIONAL INFORMATION ABOUT "SIMPSON" PRODUCTS ONLINE - WWW.STRONGTIE.COM OR CONTACT ENGINEERING SUPPORT @ 1-800-999-5099

NOTE:
DUE TO VARIATIONS IN SELECTED PRINTER SETTINGS, NOTED SCALES MAY NO LONGER BE APPLICABLE

BuildBlock BUILDING SYSTEMS

9705 N. BROADWAY EXTENSION, SUITE 200, OKLAHOMA CITY, OK 73114
OFFICE: 405-840-3386 | TOLL FREE: 866-222-2575 | FAX: 831-597-0792
BUILDBLOCK.COM

BUILDBLOCK 6" TYPICAL FLOOR INTERSECTIONS

DATE/REV	11-17-09	SCALE	NTS	DETAIL SHEET
NOTES				14

NOTE:
INSTALL APPROVED MEMBRANE WATER-PROOFING AT ALL SURFACES BELOW GRADE EXTEND 12" MIN. ABOVE FINAL GRADE

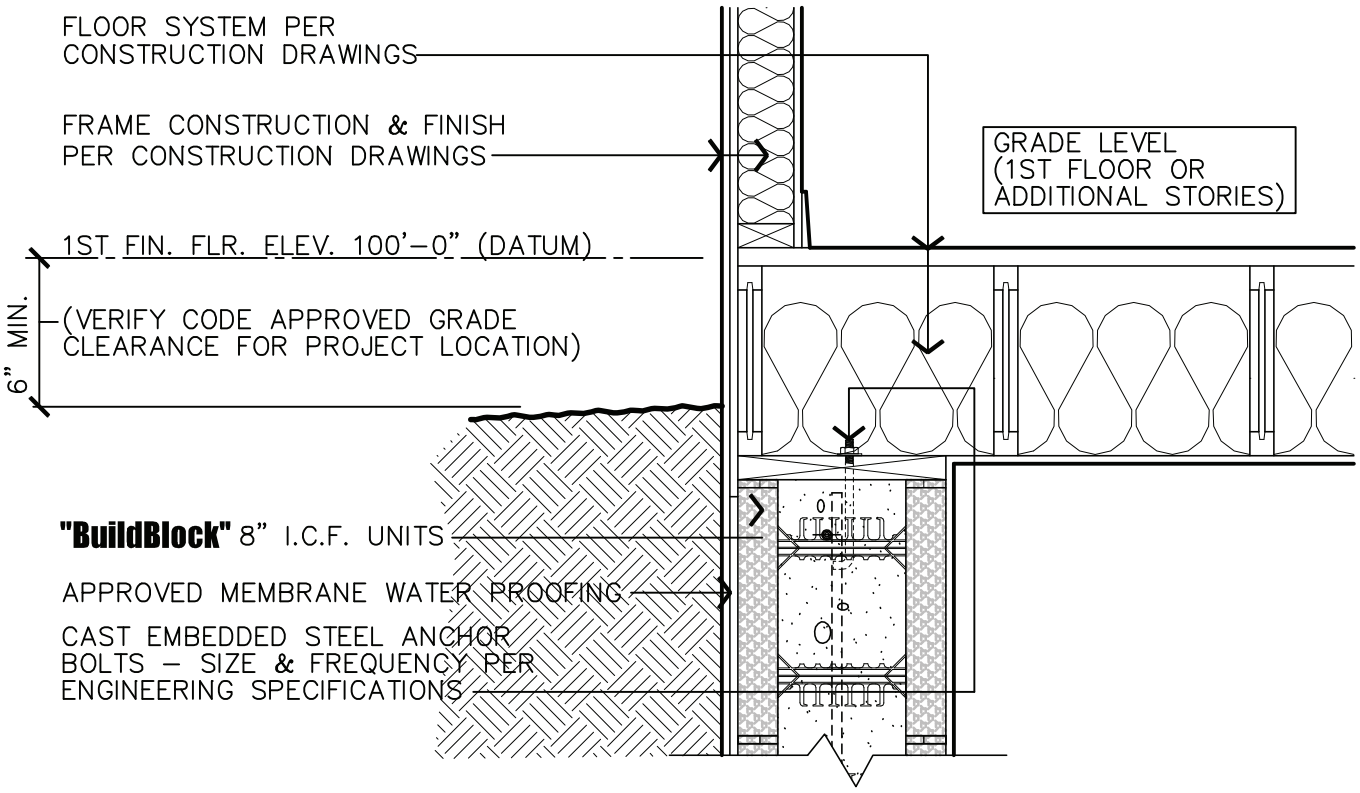

1 / 14a SECTION DETAIL
SCALE: 1" = 1'-0"

NOTE:
DUE TO VARIATIONS IN SELECTED PRINTER SETTINGS, NOTED SCALES MAY NO LONGER BE APPLICABLE

BuildBlock® BUILDING SYSTEMS

9705 N. BROADWAY EXTENSION, SUITE 200, OKLAHOMA CITY, OK 73114
OFFICE: 405-840-3386 | TOLL FREE: 866-222-2575 | FAX: 831-597-0792
BUILDBLOCK.COM

FRAME FLOOR TOP BEARING

DATE/REV	10-04-07 /4	SCALE	NTS	DETAIL SHEET
NOTES				14A

NOTE:
INSTALL APPROVED MEMBRANE WATER–PROOFING AT ALL SURFACES BELOW GRADE EXTEND 12" MIN. ABOVE FINAL GRADE

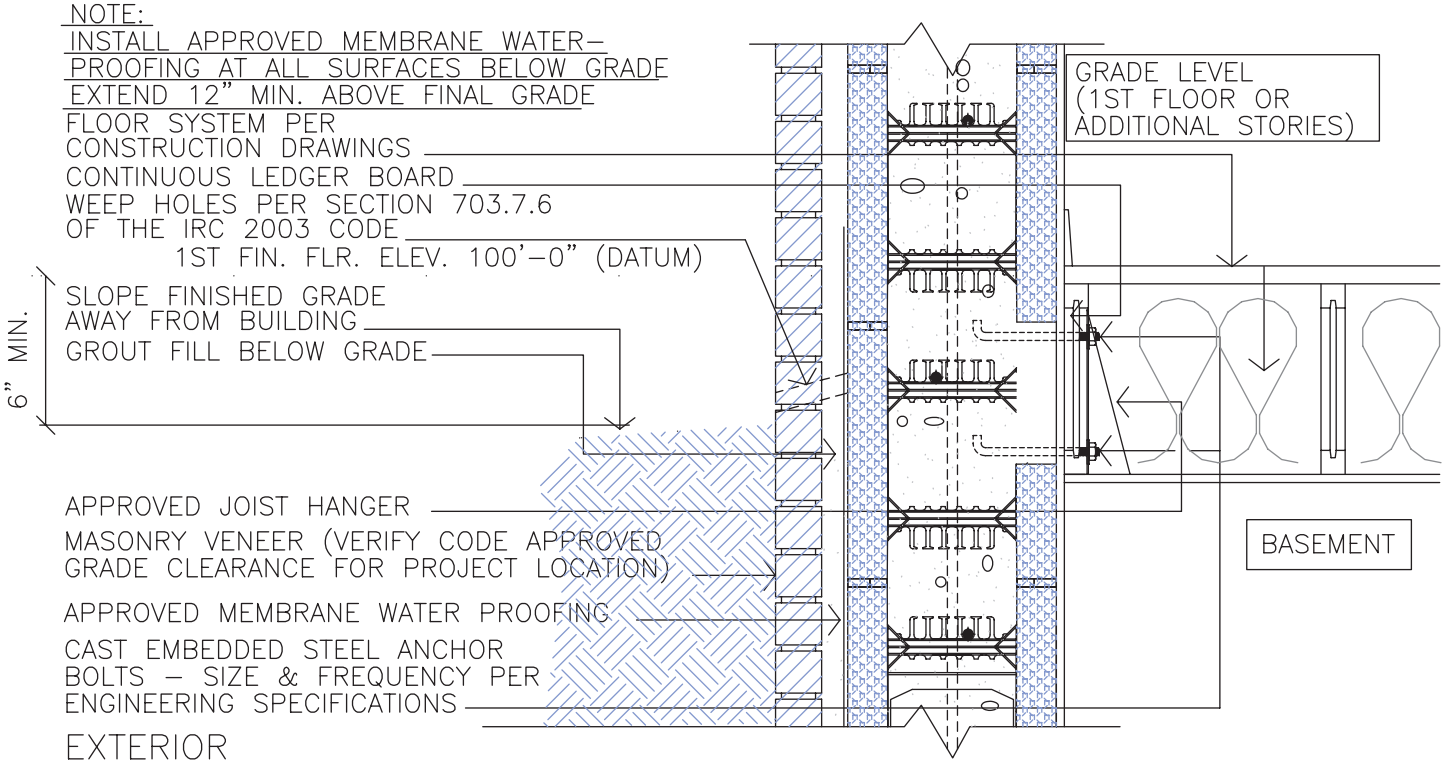

2 / 14b ALTERNATE SECTION DETAIL
SCALE: 1" = 1'–0"

EXTERIOR APPLICATIONS

FLOOR SYSTEM FOR EXTERIOR APPLICATION SUCH AS WOOD OR METAL DECKS MAY USE A SIMILAR ANCHORING SYSTEM TO THOSE SHOWN ON THIS DETAIL SHEET

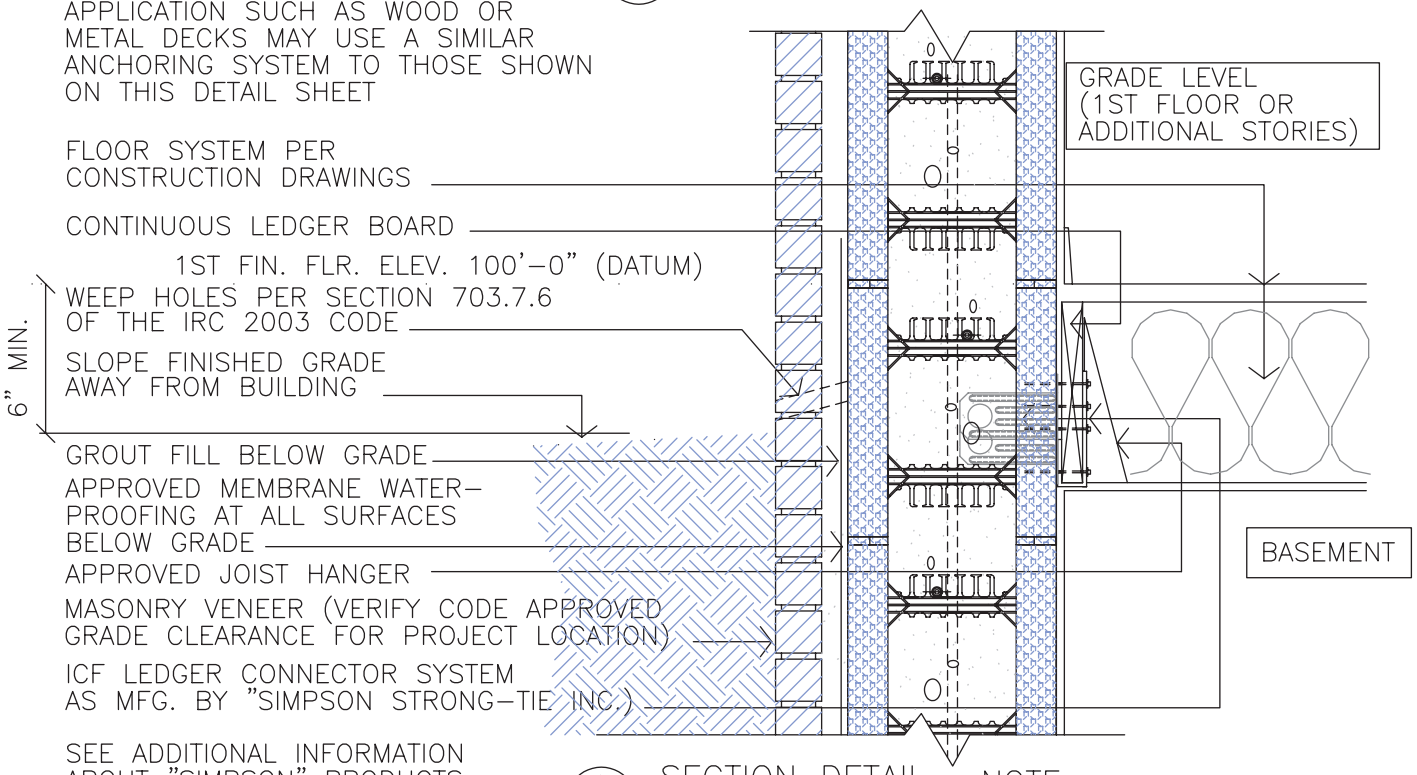

SEE ADDITIONAL INFORMATION ABOUT "SIMPSON" PRODUCTS ONLINE – WWW.STRONGTIE.COM OR CONTACT ENGINEERING SUPPORT @ 1–800–999–5099

1 / 14b SECTION DETAIL
SCALE: 1" = 1'–0"

NOTE:
DUE TO VARIATIONS IN SELECTED PRINTER SETTINGS, NOTED SCALES MAY NO LONGER BE APPLICABLE

BuildBlock® BUILDING SYSTEMS

9705 N. BROADWAY EXTENSION, SUITE 200, OKLAHOMA CITY, OK 73114
OFFICE: 405-840-3386 | TOLL FREE: 866-222-2575 | FAX: 831-597-0792
BUILDBLOCK.COM

BUILDBLOCK 8" TYPICAL FLOOR WALL INTERSECTIONS

DATE/REV	11-17-09	SCALE	NTS	DETAIL SHEET
NOTES				14B

CONSTRUCTION SHALL BE IN ACCORDANCE WITH ALL APPLICABLE LOCAL AND NATIONAL CODES. ALL DRAWINGS ARE SUBJECT TO CHANGE WITHOUT NOTICE.

ICF Connectors

SIMPSON Strong-Tie

The ICF Ledger Connector System is engineered to solve the challenges of mounting wood or steel ledgers to insulated concrete form (ICF) walls. This flier provides information on the various products we have to serve the ICF market.

This year Simpson is introducing a new component of the system–the ICFVL–designed to provide both vertical and lateral, in-plane resistance. The system is still quick, versatile and easy to use but now provides so much more! Simpson's ICFVL is made from galvanized, 14 gauge steel. The embedded legs are embossed for additional stiffness and the holes allow for concrete to flow through and around the connector. The exposed flange on the face of the ICF provides a structural surface for mounting either a wood or steel ledger.

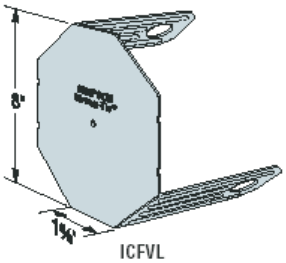

ICFVL

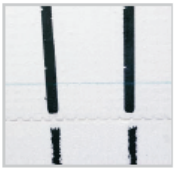

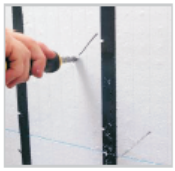

INSTALLATION OF ICFVL:

- Snap a line for the bottom of the ledger and mark the on center spacing
- Use the ICFVL to mark the kerf locations in the ICF
- Cut the kerfs as marked
- Insert the ICFVL flush to the face of the ICF
- Place concrete (min f'c = 2500 psi).

Installation tip: Use a screw through diamond hole in face of ICFVL and into web to hold in place during concrete pour (remove prior to ledger installation).

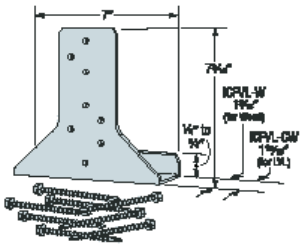

ICFVL-W and ICFVL-CW

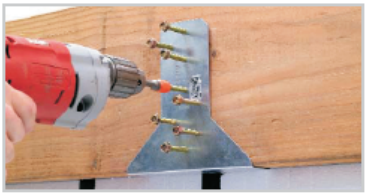

ATTACHMENT OF WOOD LEDGER

- Slip the appropriate ledger connector underneath the wood ledger (as shown)
- Install the eight ICF-D3 screws partially into the ledger
- Position the ledger level to the chalk line and drive the screws through the wood and into the ICFVL
- All screws should be located at least ½" from the edge of the ICFVL

Note: Do not splice at the ICFVL-W or ICFVL-CW's location.

ATTACHMENT OF STEEL LEDGER

- Position the ledger level to the chalk line and drive the required number of screws through the steel ledger and into the ICFVL
- All screws should be located at least ½" from the edge of the ICFVL
- Space screws evenly

800-999-5099
www.strongtie.com

F-ICFVL06 12/05 exp. 1/08

BuildBlock BUILDING SYSTEMS

9705 N. BROADWAY EXTENSION, SUITE 200, OKLAHOMA CITY, OK 73114
OFFICE: 405-840-3386 | TOLL FREE: 866-222-2575 | FAX: 831-597-0792
BUILDBLOCK.COM

SIMPSON ICF CONNECTORS

DATE/REV	03-12-07 /2	SCALE	NTS	DETAIL SHEET
NOTES				15

CONSTRUCTION SHALL BE IN ACCORDANCE WITH ALL APPLICABLE LOCAL AND NATIONAL CODES. ALL DRAWINGS ARE SUBJECT TO CHANGE WITHOUT NOTICE.

ICF Connectors

1. Use MAB15Z or MAB23Z.
2. Attach interior partition walls with ¼–14 #3 drill point screws (sold separately) into ICFVL where needed.
3. Use ICFVL to attach ledger to ICF.
4. Use ICFVL-W for solid sawn lumber or ICFVL-CW for LVL.
   NOTE: See drawing below for detail on double 2x ledger.
5. Use IUS hanger for I-joist floor system.

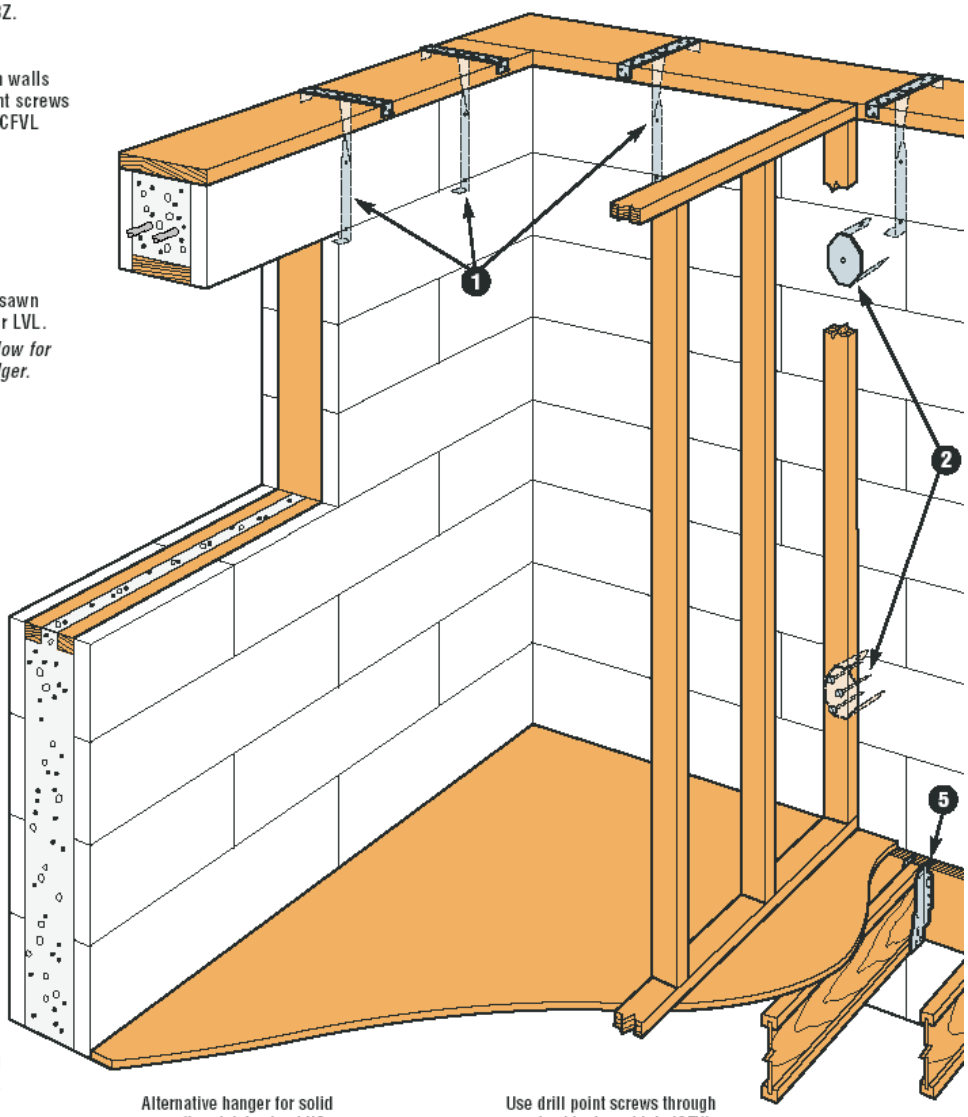

Typical face mount floor truss hangers include, but not limited to, LUS, HUS, HGUS and HHUS. Attachment of second ledger to be designed by others.

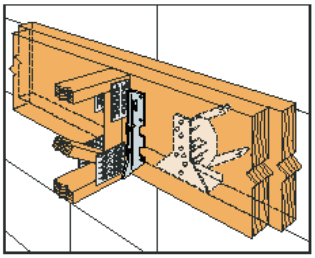

Alternative hanger for solid sawn floor joist using LUS.

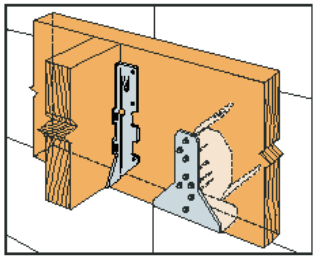

Use drill point screws through wood cabinets and into ICFVL..

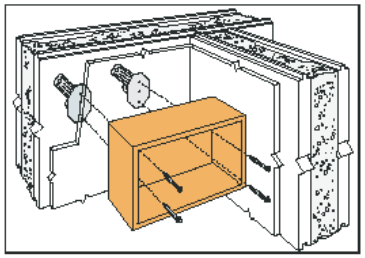

BuildBlock BUILDING SYSTEMS

9705 N. BROADWAY EXTENSION, SUITE 200, OKLAHOMA CITY, OK 73114
OFFICE: 405-840-3386 | TOLL FREE: 866-222-2575 | FAX: 831-597-0792
BUILDBLOCK.COM

SIMPSON ICF CONNECTORS

DATE/REV	03-12-07 /2	SCALE	NTS	DETAIL SHEET
NOTES				15A

CONSTRUCTION SHALL BE IN ACCORDANCE WITH ALL APPLICABLE LOCAL AND NATIONAL CODES. ALL DRAWINGS ARE SUBJECT TO CHANGE WITHOUT NOTICE.

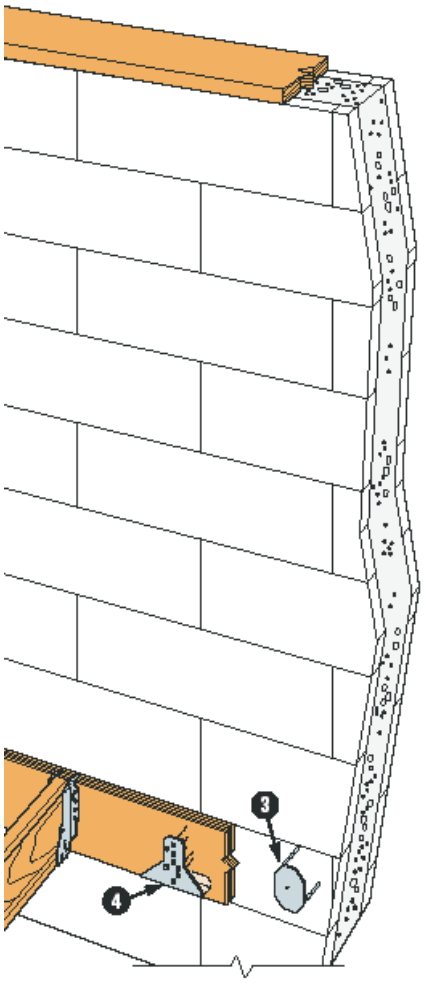

Plate Connections

Anchor Spacing

Model No.	O.C. Spacing to replace ½" Anchor Bolt 6' O.C.		O.C. Spacing to replace ⅝" Anchor Bolt 6' O.C.		Min. Concrete End Distance	Min. C–C Spacing
	(133)	(160)	(133)	(160)		
MAB15	3½'	3'	2½'	2'	6½"	13"
MAB23	3½'	3'	2½'	2'	12"	24"

1. Place anchors not more than 1' from the end of each sill per code.
2. Spacing is based on parallel to plate load direction only.
3. All grout and concrete min. f'_C 2000 psi.

Typical MAB23 Installation into ICF.

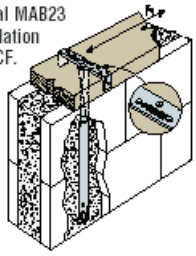

Anchor Spacing

Titen HD Size (in)	Titen HD Model #	Sill Plate Size (in)	Min. Edge Dist. (in)	Min. End Dist. (in)	Min Wall Width (in)
½ x 6	THD50600H	2x or 3x	1¾	8	6
⅝ x 6	THD62600H	2x	1¾	10	6
⅝ x 6½	THD62612H	3x	1¾	10	6

1. Min. concrete strength 2500 psi.
2. For ACQ or CA lumber order products Mechanically Galvanized (MG). For additional information, visit www.strongtie.com/info
3. Designs based on a minimum embedment of 3¼" for ½" Titen HDs and 3¾" for ⅝" Titen HDs.
4. For additional information, refer to the latest Simpson Anchor & Fastening Systems for Concrete & Masonry catalog.
5. Direct 1 to 1 replacement is based on parallel-to-plate, perpendicular-to-plate, and tension comparisons to a cast-in-place anchor bolt of equivalent diameter.

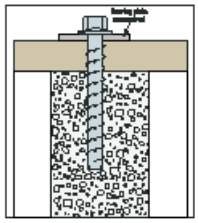

Titen HD

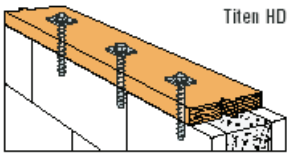

Titen HD installation into ICF.

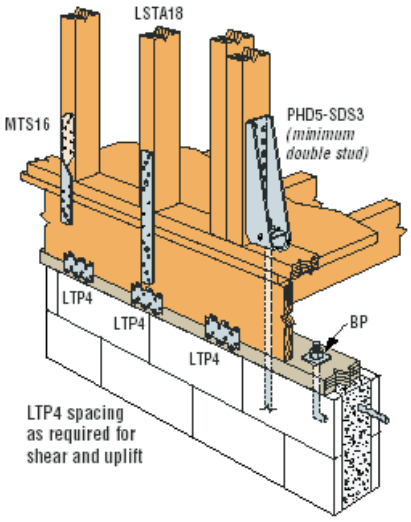

BuildBlock® BUILDING SYSTEMS

9705 N. BROADWAY EXTENSION, SUITE 200, OKLAHOMA CITY, OK 73114
OFFICE: 405-840-3386 | TOLL FREE: 866-222-2575 | FAX: 831-597-0792
BUILDBLOCK.COM

SIMPSON ICF CONNECTORS

DATE/REV	03-12-07 /1	SCALE	NTS	DETAIL SHEET
NOTES				15B

CONSTRUCTION SHALL BE IN ACCORDANCE WITH ALL APPLICABLE LOCAL AND NATIONAL CODES. ALL DRAWINGS ARE SUBJECT TO CHANGE WITHOUT NOTICE.

Truss Connections

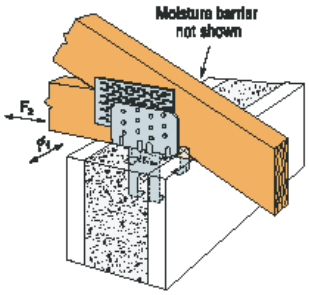

Lateral Truss Anchor (LTA) for high uplift and lateral values eliminates treated plate.

See Simpson catalog for additional information on Lateral Truss Anchors.

Model No.	Fasteners	Allowable Loads (133/160) - DF/SP		
		Uplift	Lateral	
			F1	F2
LTA1	12-10dx1 ½	1420	485	1425

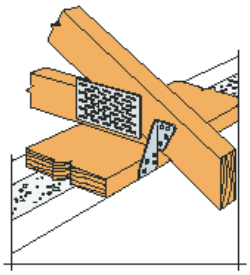

H4 for single plate to truss connection.

See Simpson catalog for additional information and other models of Seismic and Hurricane Ties.

Model No.	Ga	Fasteners			Allowable Loads (133/160) - DF/SP		
		To Rafter or Truss		To Plates	Uplift	Lateral	
		Single ply	2 ply or greater			F1	F2
H4	18	4-8dx1½	4-8d	4-8d	360	165	160

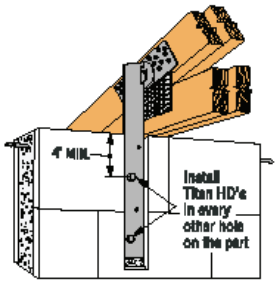

FGTR installation into ICF.

See Simpson catalog for additional information on Face Mount Girder Tiedowns.

Model No.	Fasteners		Allowable Uplift Loads (133/160)
	To Rafters or Truss	To Concrete	
FGTR	18-SDS¼x3	2-½x5 Titen HD	5000

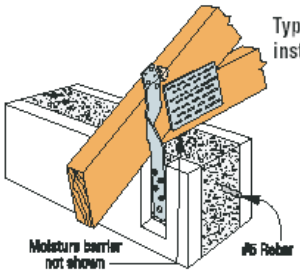

Typical MTSM20 installation into ICF.

See Simpson catalog for additional information and other models of Twist Straps.

Model No.	L	Fasteners			Allowable Uplift Loads (133/160)	
		To Rafter or Truss		To Concrete		
		Single ply	2 ply or greater		DF/SP	SPF
MTSM20	20	7-10dx1½	7-10d	4-¼x1¾ Titen	840	730

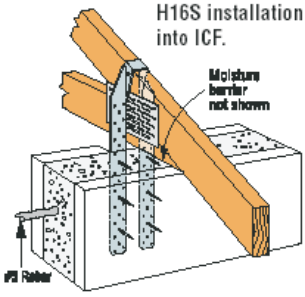

H16S installation into ICF.

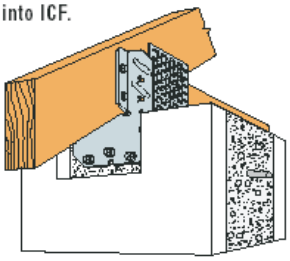

HM9 installation into ICF.

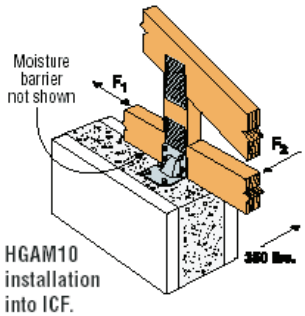

HGAM10 installation into ICF.

Model No.	Ga	Fasteners		Allowable Loads					
		To Rafter or Truss	To Concrete	DF/SP (133/160)			SPF (133/160)		
				Uplift	F1	F2	Uplift	F1	F2
H16S	18	2-10dx1½	6-¼x1¾ Titen	1470	–	–	1265	–	–
HM9	18	4-SDS¼x1½	5-¼x1¾ Titen	595	425	200	595	425	200
HGAM10	14	4-SDS¼x1½	4-¼x1¾ Titen	850	1005	1105	850	870	815

1. Loads have been increased 33 and 60% for earthquake or wind loading with no further increase allowed. Reduce where other loads govern.
2. Minimum edge distance is 1½" when using Titen screws.
3. See Simpson catalog for additional dimensional, installation and loading information.

BuildBlock BUILDING SYSTEMS
9705 N. BROADWAY EXTENSION, SUITE 200, OKLAHOMA CITY, OK 73114
OFFICE: 405-840-3386 | TOLL FREE: 866-222-2575 | FAX: 831-597-0792
BUILDBLOCK.COM

SIMPSON ICF CONNECTORS

DATE/REV	03-12-07 /1	SCALE	NTS	DETAIL SHEET
NOTES				15C

ICF Connectors

GENERAL NOTES:

1. **These products are not intended for use on pressure-treated lumber.**
2. Do not splice ledger at ICFVL location.
3. No load duration increase is allowed.
4. Minimum concrete compressive strength (f'c) is 2500 psi.

WARNING: Industry studies show that hardened fasteners can experience performance problems in wet environments. Accordingly, use this product in dry, interior applications only.

WOOD LEDGERS

Allowable Loads (lbs) - ASD	
Vertical	Lateral
1940	1905

1. Use eight ICF-D3 screws (provided).
2. Loads apply to ICF's with wall thickness 2⅝" or less. Contact Simpson for allowable loads on thicker walls.
3. Loads assume a minimum Spruce-Pine-Fir ledger.

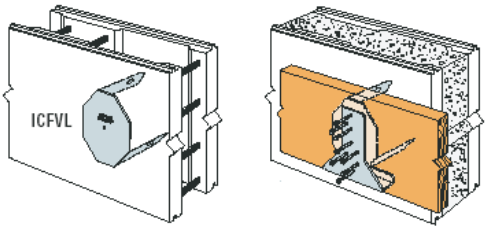

Typical Wood Ledger Installation with ICFVL and ICFVL-W
[ICFVL-CW (for LVL Ledger) similar]

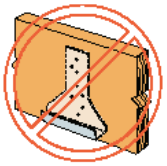

MISINSTALLATION!

Recommended Splicing Installation

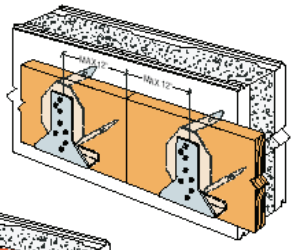

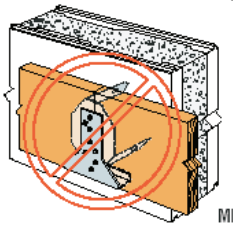

Splicing MISINSTALLATION!

ICFVL Spacing to Replace Anchor Bolts							
½" Diameter Bolts				⅝" Diameter Bolts			
12" o.c.	24" o.c.	36" o.c.	48" o.c.	12" o.c.	24" o.c.	36" o.c.	48" o.c.
48"	48"	48"	48"	43"	48"	48"	48"
(2) ⅝" Diameter Bolts				¾" Diameter Bolts			
12" o.c.	24" o.c.	36" o.c.	48" o.c.	12" o.c.	24" o.c.	36" o.c.	48" o.c.
21"	42"	48"	48"	39"	48"	48"	48"

1. The Designer may specify different spacing based on the load requirements.
2. Spacings are based on perpendicular to grain capacity of bolt in wood ledger compared to tested value of ICFVL with a maximum allowable spacing of 48".

STEEL LEDGERS

Allowable Loads (lbs) - ASD	
Vertical	Lateral
1660	1525

1. Use four ¼-14x¾", #3 drill point screws (not provided).
2. Loads apply to ICF's with wall thickness 2⅝" or less.Contact Simpson for allowable loads on thicker walls.

Ledger Thickness (mils)	Spacing to Replace Anchor Bolts			
	½" Diameter Bolts		⅝" Diameter Bolts	
	12" o.c.	24" o.c.	12" o.c.	24" o.c.
68 mils (0.068")	11"	22"	9"	18"
54 mils (0.054")	15"	30"	12"	24"

1. For steel ledgers, the 68 mil ledger spacing is closer than the 54 mil ledger because the calculated load of a bolt is higher in a thicker piece of steel.
2. Steel ledger values are based on steel. F_u = 60 ksi.

Requires 4 screws at each location.

Table provides on center spacing.

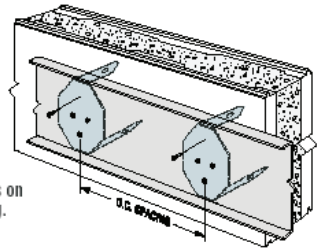

Typical Steel Ledger Installation with ICFVL
(Minimum 16 gauge steel ledger)

BuildBlock BUILDING SYSTEMS
9705 N. BROADWAY EXTENSION, SUITE 200, OKLAHOMA CITY, OK 73114
OFFICE: 405-840-3386 | TOLL FREE: 866-222-2575 | FAX: 831-597-0792
BUILDBLOCK.COM

SIMPSON ICF CONNECTORS

DATE/REV	03-12-07 /1	SCALE	NTS	DETAIL SHEET
NOTES				15D

ICF Connectors

The following spacing tables are an alternative to the ICFVL Spacing to Replace Anchor Bolts tables or allowable loads on page 5. They give the spacing of our ICFVL Ledger Connectors based on the allowable vertical load of the connector, the load on the floor and the span of the joists. The designer must determine the design load, the ledger design and joist design. This table is useful if the designer already has loads and spans, but not necessarily anchor bolt spacing.

Uniform Loads		ICFVL Spacing for Wood Ledger (in)									
Dead Load (PSF)	Live Load (PSF)	Joist Span (ft)									
		10	12	14	16	18	20	22	24	26	28
10	40	48	48	48	48	48	47	42	39	36	33
15	40	48	48	48	48	47	42	38	35	33	30
20	40	48	48	48	48	43	39	35	32	30	28
10	60	48	48	48	42	37	33	30	28	26	24
20	60	48	48	42	36	32	29	26	24	22	21
30	60	48	43	37	32	29	26	24	22	20	18
40	60	47	39	33	29	26	23	21	19	18	17
10	100	42	35	30	26	24	21	19	18	16	15
20	100	39	32	28	24	22	19	18	16	15	14

See notes below.

Uniform Loads		ICFVL Spacing for Steel Ledger (in)									
Dead Load (PSF)	Live Load (PSF)	Joist Span (ft)									
		10	12	14	16	18	20	22	24	26	28
10	40	48	48	48	48	44	40	36	33	31	28
15	40	48	48	48	45	40	36	33	30	28	26
20	40	48	48	47	42	37	33	30	28	26	24
10	60	48	47	41	36	32	28	26	24	22	20
20	60	48	42	36	31	28	25	23	21	19	18
30	60	44	37	32	28	25	22	20	18	17	16
40	60	40	33	28	25	22	20	18	17	15	14
10	100	36	30	26	23	20	18	16	15	14	13
20	100	33	28	24	21	18	17	15	14	13	12

1. Values shown are maximum spacing distances (in) based on simple span, uniformly loaded conditions and do not consider concentrated loads.
2. Joist and ledger are to be designed by others.
3. Allowable loads are based on testing, with no further increases allowed.
4. Tables above address vertical loads only. If connection is designed to resist lateral loads, spacing will decrease. Contact Simpson for current information.

Simpson offers many retrofit products for attaching wood or steel framing members to concrete. For expanded details contact us at (800) 999-5099 and request the current Simpson Anchor Systems catalog, or visit the Simpson Anchor Systems website at www.simpsonanchors.com.

Alternative Retrofit Solution for Direct Attachment of Joist to Wall

The HU and HUC hangers are heavy duty face mount joist hangers made from 14 ga galvanized steel. These hangers can be directly attached to concrete wall using ¼x1¾" Titen Hex Head screws. See Simpson technical bulletin T-ANCHORSPEC for more information on installation and use.

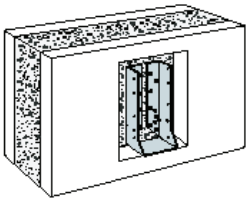

HUC410 Installed on face of concrete in ICF

This flier is effective until January 31, 2008, and reflects information available as of December 1, 2005. This information is updated periodically and should not be relied upon after January 31, 2008; contact Simpson for current information and limited warranty or see www.strongtie.com.

Home Office
4120 Dublin Blvd., Ste 400
Dublin, CA 94568
FAX: 925/833-1496

Northwest USA
5151 S. Airport Way
Stockton, CA 95206
FAX: 209/234-3868

Southwest USA
260 N. Palm Street
Brea, CA 92821
FAX: 714/871-9167

Northeast USA
2600 International Street
Columbus, OH 43228
FAX: 614/876-0636

Southeast USA
2221 Country Lane
McKinney, TX 75069
FAX: 972/542-5379

Quik Drive Factory
436 Calvert Drive
Gallatin, TN 37066
FAX: 615/451-9806

Eastern Canada
5 Kenview Blvd.
Brampton, ON L6T 5G5
FAX: 905/458-7274

Western Canada
11476 Kingston St.
Maple Ridge, BC V2X 0Y5
FAX: 604/465-0297

Warehouses:
Enfield, CT
Jacksonville, FL
Kent, WA
Langley, BC

800-999-5099
www.strongtie.com

Printed in the USA
F-ICFVL06 12/05 exp. 1/08

BuildBlock BUILDING SYSTEMS

9705 N. BROADWAY EXTENSION, SUITE 200, OKLAHOMA CITY, OK 73114
OFFICE: 405-840-3386 | TOLL FREE: 866-222-2575 | FAX: 831-597-0792
BUILDBLOCK.COM

SIMPSON ICF CONNECTORS

DATE/REV	03-12-07 /1	SCALE	NTS	DETAIL SHEET
NOTES				15E

CONSTRUCTION SHALL BE IN ACCORDANCE WITH ALL APPLICABLE LOCAL AND NATIONAL CODES. ALL DRAWINGS ARE SUBJECT TO CHANGE WITHOUT NOTICE.

Miscellaneous

ICFVL *Ledger Connector System*

SIMPSON Strong-Tie

NEW! The ICFVL Ledger Connector System is engineered to solve the challenges of mounting wood or steel ledgers to insulated concrete form (ICF) walls. Simpson's new ICF component of the system, the ICFVL, is designed to provide both vertical and lateral, in-plane performance. The system is still quick, versatile and easy to use but now provides so much more! There are many benefits over traditional anchor bolting, including better on center spacing in most cases, faster installation and no protrusions.

Simpson's ICFVL is made from galvanized, 14 gauge steel. The embedded legs are embossed for additional stiffness and the hole allows for concrete to flow through and around the connector. The exposed flange on the face of the ICF provides a structural surface for mounting either a wood or steel ledger.

MATERIAL: ICFVL—14 gauge; ICFVL-CW and ICFVL-W—16 gauge
FINISH: Galvanized
INSTALLATION: ICFVL in ICF

- Snap a chalk line for the bottom of the ledger.
- Mark required on center spacing.
- Use ICFVL to mark kerfs locations.
- Cut kerfs as marked.
- Insert ICFVL flush to the face of the ICF.
- Place concrete.

Wood Ledger Attachment – ICFVL-W or -CW

- Slip appropriate ledger connector underneath the ledger.
- Install the eight ICF-D3 screws partially into the ledger.
- Position the ledger level to the chalk line and drive the screws through the wood and into the ICFVL.

Steel Ledger Attachment

- Position the ledger level to the chalk line and against the ICFVL.
- Attach with four ¼-14x¾", #3 drill point screws *(not provided)*.
- All screws should be located at least ½" from the edge of the ICFVL.
- Space screws evenly.

CODES: See page 12 for Code Listing Key Chart.

WARNING: Industry studies show that hardened fasteners can experience performance problems in wet environments. Accordingly, use this product in dry environments only.

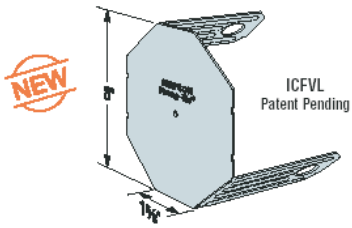

ICFVL
Patent Pending

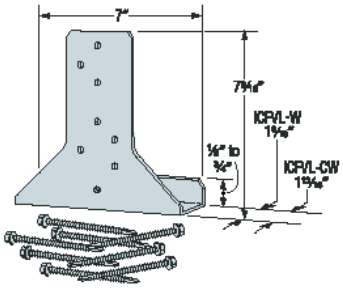

ICFVL-W and ICFVL-CW

Ledger Type	Fasteners	Allowable Load (lbs)	
		Download (100/115/125)	Lateral F_1 (133/160)
Wood	8-ICF D3	1940	1905
Steel	4 - ¼x¾[3]	1660	1525

1. Fasteners for wood ledger (D3) are provided with the part and fasteners for steel ledger are not provided.
2. Loads apply to ICF foam thicknesses of 2⅝" or less. Contact Simpson for allowable loads on thicker walls.
3. Alternately, #14 x ¾" fastener may be used.
4. Tabulated loads may not be increased.
5. Concrete f'c = 2500 psi minimum.
6. When combining download and lateral loads, Designer shall evaluate as follows: Design Download/Allowable Download + Design Lateral Load/Allowable Lateral Load.

These tables address vertical load applications only.

Ledger Type	Connector Type	ICFVL SPACING TO REPLACE ANCHOR BOLTS (in.)[1,2,3]																Code Ref.
		½" Dia. Anchors at				⅝" Dia. Anchors at				(2)-⅝" Dia. Anchors at				¾" Dia. Anchors at				
		12" o.c.	24" o.c.	36" o.c.	48" o.c.	12" o.c.	24" o.c.	36" o.c.	48" o.c.	12" o.c.	24" o.c.	36" o.c.	48" o.c.	12" o.c.	24" o.c.	36" o.c.	48" o.c.	
WOOD LEDGERS																		
DF/SP/SPF	ICFVL w/ ICFVL-W	48	48	48	48	43	48	48	48	21	42	48	48	39	48	48	48	160
LVL	ICFVL w/ ICFVL-CW	48	48	48	48	43	48	48	48	21	42	48	48	39	48	48	48	160
STEEL LEDGERS																		
68 mils (0.068")	ICFVL	11	22	33	44	9	18	27	36	—	—	—	—	—	—	—	—	160
54 mils (0.054")	ICFVL	15	30	45	48	12	24	36	48	—	—	—	—	—	—	—	—	160

1. The Designer may specify different spacing based on the load requirements.
2. Spacings are based on perpendicular to grain capacity of bolt in wood ledger compared to tested value of ICFVL.
3. See F-ICFVL flier for additional connection details.
4. For steel ledgers, the 68 mil ledger spacing is closer than the 54 mil ledger because the calculated load of a bolt is higher in a thicker piece of steel.
5. Steel ledger values are based on steel. F_u = 60 ksi.

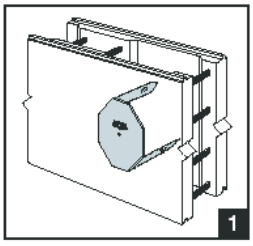

ICFVL

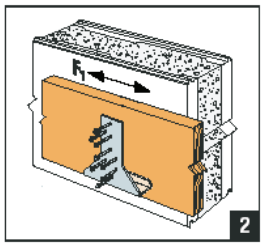

Typical Wood Ledger Installation with ICFVL and ICFVL-W

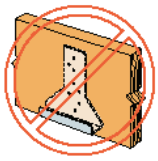
MISINSTALLATION!

Typical Steel Ledger Installation with ICFVL *(minimum 16 ga steel ledger)*

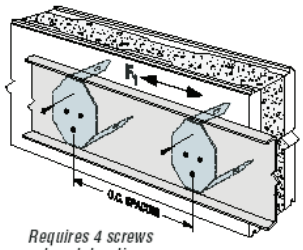

Requires 4 screws at each location. Table provides on center spacing.

Miscellaneous

BuildBlock BUILDING SYSTEMS
9705 N. BROADWAY EXTENSION, SUITE 200, OKLAHOMA CITY, OK 73114
OFFICE: 405-840-3386 | TOLL FREE: 866-222-2575 | FAX: 831-597-0792
BUILDBLOCK.COM

SIMPSON ICF CONNECTORS

DATE/REV	03-12-07 /1	SCALE	NTS	DETAIL SHEET
NOTES				15F

CONSTRUCTION SHALL BE IN ACCORDANCE WITH ALL APPLICABLE LOCAL AND NATIONAL CODES. ALL DRAWINGS ARE SUBJECT TO CHANGE WITHOUT NOTICE.

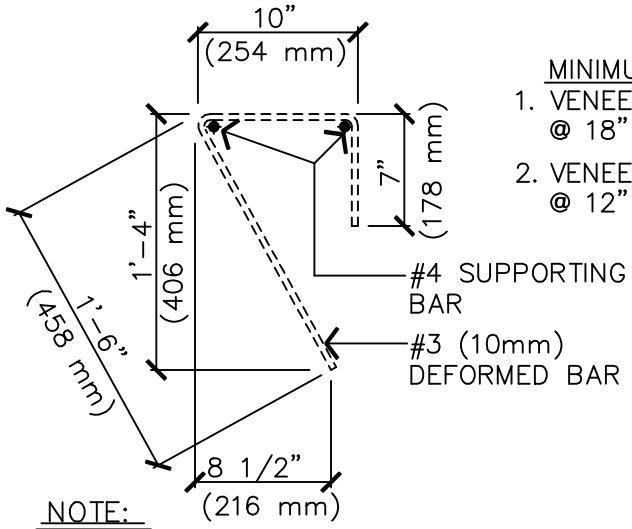

MINIMUM SPACING:

1. VENEER – 1000 lb/ft (15kN/m @ 18" (450mm)
2. VENEER – 1500 lb/ft (22kN/m @ 12" (300mm)

NOTE:

ALL BENDS PER ANSI & STEEL INSTITUTE STANDARDS
–STEEL GRADES AS SPECIFIED
– DIMENSIONS TYPICAL FOR ALL LEDGE BLOCK APPLICATIONS

2/16 STIRRUP DETAIL
SCALE: 1" = 1'-0"

MASONRY VENEER WITH 6" "BuildBlock"

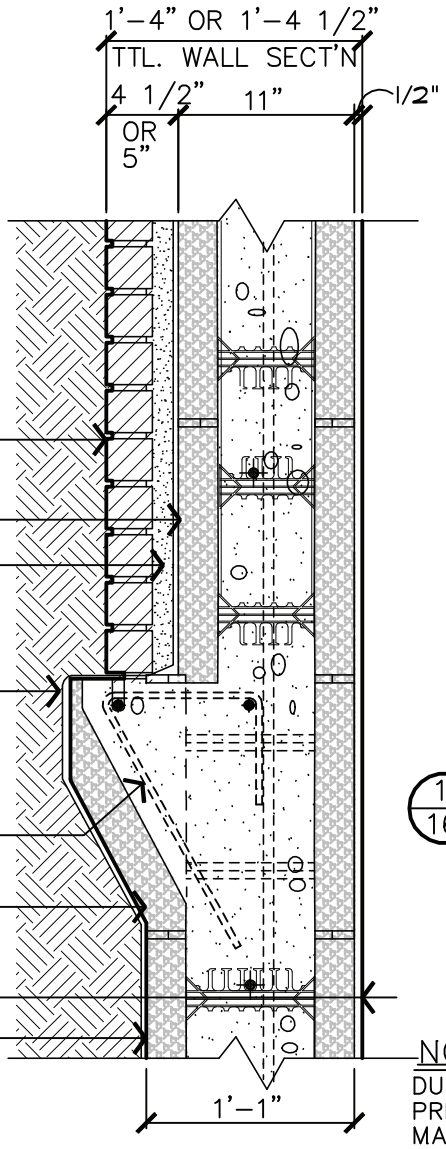

MASONRY VENEER (VERIFY CODE APPROVED GRADE CLEARANCE FOR PROJECT LOCATION

"BuildBlock" 6" I.C.F. UNITS

GROUT FILL BELOW GRADE

APPROVED MEMBRANE WATERPROOFING (ALL SURFACES BELOW GRADE)

REBAR STIRRUPS (SEE DETAIL OR AS ENGINEERED FOR SPECIFIC LOAD)

"BuildBlock" LEDGE BLOCK

1/2" GYP. BD. MIN. OR PER LOCAL CODES

"BuildBlock" 8" I.C.F. UNITS

1/16 "BuildBlock" LEDGE BLOCK SECTION DETAIL
SCALE: 1" = 1'-0"
(ALSO REFER TO DETAIL SHEET 5 FOR "BUILD BLOCK" FORM DIMENSIONS)

NOTE:

DUE TO VARIATIONS IN SELECTED PRINTER SETTINGS, NOTED SCALES MAY NO LONGER BE APPLICABLE

BuildBlock BUILDING SYSTEMS

9705 N. BROADWAY EXTENSION, SUITE 200, OKLAHOMA CITY, OK 73114
OFFICE: 405-840-3386 | TOLL FREE: 866-222-2575 | FAX: 831-597-0792
BUILDBLOCK.COM

BUILDBLOCK 6" LEDGE BLOCK APPLICATION 1

DATE/REV	10-03-07 /4	SCALE	NTS	DETAIL SHEET
NOTES				16

CONSTRUCTION SHALL BE IN ACCORDANCE WITH ALL APPLICABLE LOCAL AND NATIONAL CODES. ALL DRAWINGS ARE SUBJECT TO CHANGE WITHOUT NOTICE.

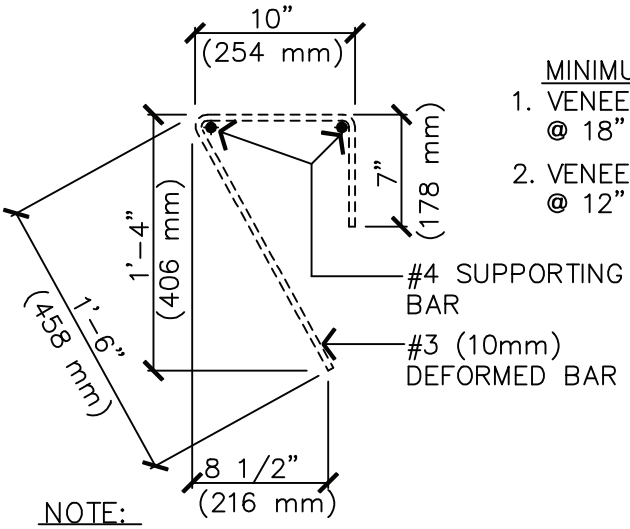

MINIMUM SPACING:

1. VENEER – 1000 lb/ft (15kN/m @ 18" (450mm)
2. VENEER – 1500 lb/ft (22kN/m @ 12" (300mm)

NOTE:

ALL BENDS PER ANSI & STEEL INSTITUTE STANDARDS
–STEEL GRADES AS SPECIFIED
– DIMENSIONS TYPICAL FOR ALL LEDGE BLOCK APPLICATIONS

2/17 STIRRUP DETAIL
SCALE: 1" = 1'–0"

MASONRY WITH 8" "BuildBlock"

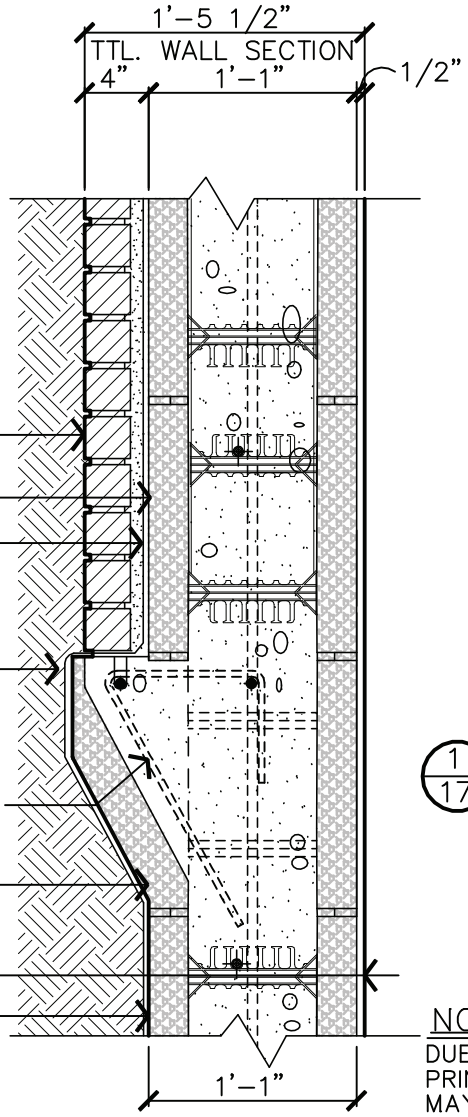

MASONRY VENEER (VERIFY CODE APPROVED GRADE CLEARANCE FOR PROJECT LOCATION

"BuildBlock" 8" I.C.F. UNITS

GROUT FILL BELOW GRADE

APPROVED MEMBRANE WATERPROOFING (ALL SURFACES BELOW GRADE)

REBAR STIRRUPS (SEE DETAIL OR AS ENGINEERED FOR SPECIFIC LOAD)

"BuildBlock" LEDGE BLOCK

1/2" GYP. BD. MIN. OR PER LOCAL CODES

"BuildBlock" 8" I.C.F. UNITS

1/17 "BuildBlock" LEDGE BLOCK SECTION DETAIL
SCALE: 1" = 1'–0"
(ALSO REFER TO DETAIL SHEET 5 FOR "BUILD BLOCK" FORM DIMENSIONS)

NOTE:

DUE TO VARIATIONS IN SELECTED PRINTER SETTINGS, NOTED SCALES MAY NO LONGER BE APPLICABLE

BuildBlock® BUILDING SYSTEMS

9705 N. BROADWAY EXTENSION, SUITE 200, OKLAHOMA CITY, OK 73114
OFFICE: 405-840-3386 | TOLL FREE: 866-222-2575 | FAX: 831-597-0792
BUILDBLOCK.COM

BUILDBLOCK 8" LEDGE BLOCK APPLICATION 2

DATE/REV	10-03-07 /4	SCALE	NTS	DETAIL SHEET
NOTES				17

CONSTRUCTION SHALL BE IN ACCORDANCE WITH ALL APPLICABLE LOCAL AND NATIONAL CODES. ALL DRAWINGS ARE SUBJECT TO CHANGE WITHOUT NOTICE.

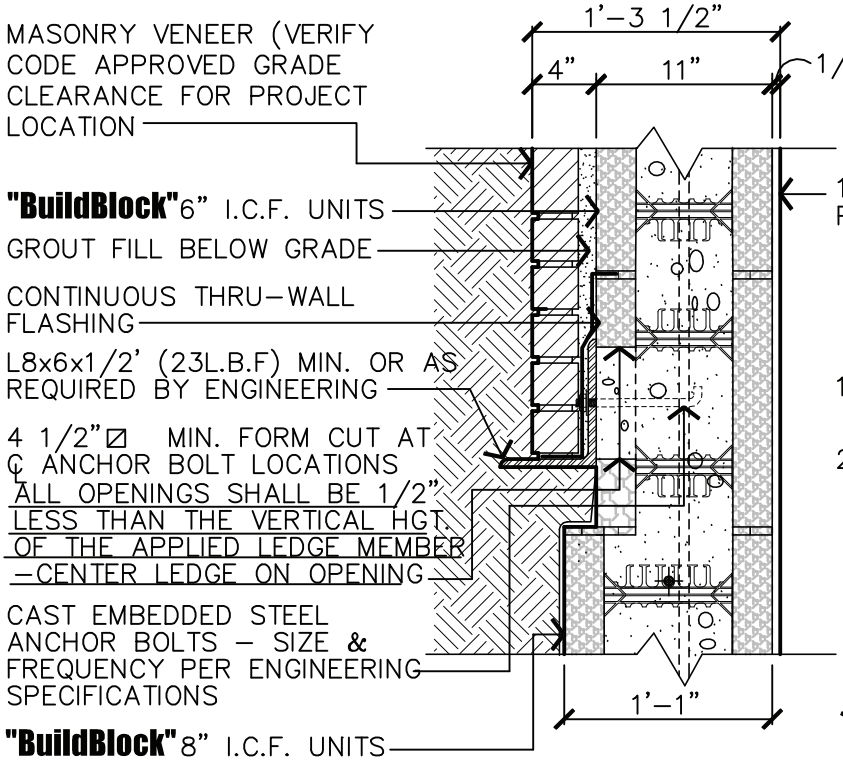

3/18 STEEL ANGLE SECTION DETAIL
SCALE: 1" = 1'–0"

1/2" GYP. BD. MIN. OR PER LOCAL CODES

MINIMUM SPACING:
1. VENEER – 1000 lb/ft (15kN/m @ 18" (450mm)
2. VENEER – 1500 lb/ft (22kN/m @ 12" (300mm)

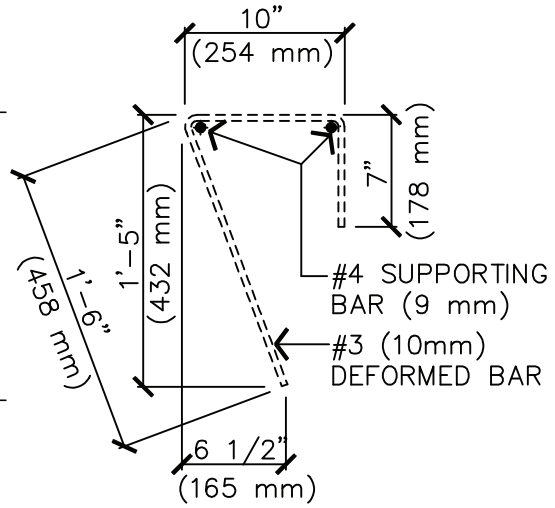

NOTE:
ALL BENDS PER ANSI & STEEL INSTITUTE STANDARDS
–STEEL GRADES AS SPECIFIED
– DIMENSIONS TYPICAL FOR ALL LEDGE BLOCK APPLICATIONS

2/18 STIRRUP DETAIL
SCALE: 1" = 1'–0"

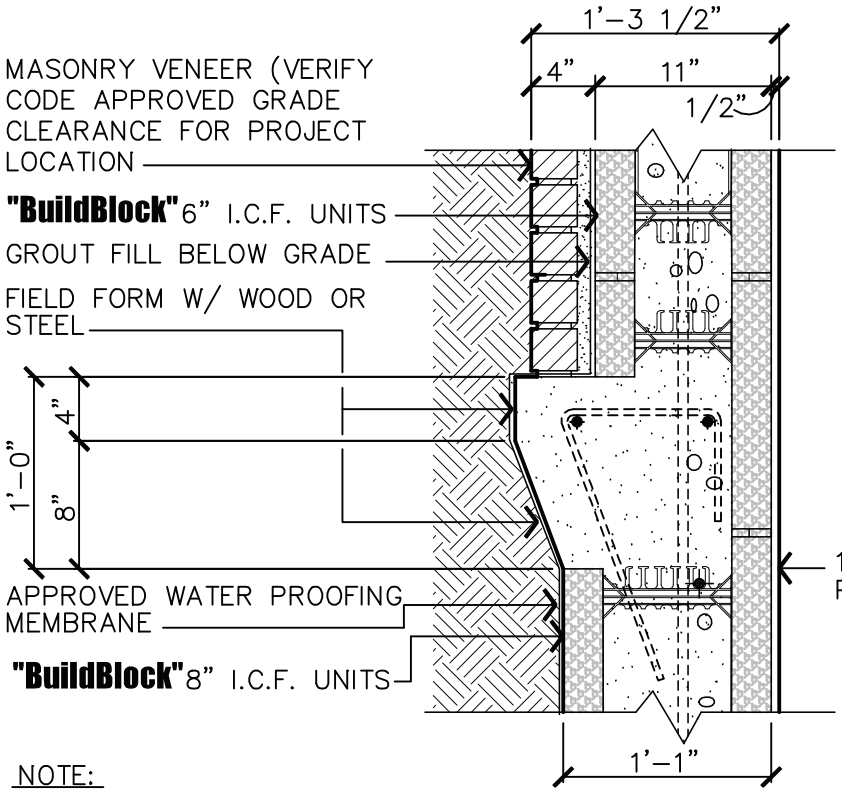

1/2" GYP. BD. MIN. OR PER LOCAL CODES

1/18 FIELD FORMED SECTION DETAIL
SCALE: 1" = 1'–0"

NOTE:
INSTALL APPROVED MEMBRANE WATER–PROOFING AT ALL SURFACES BELOW GRADE EXTEND 12" MIN. ABOVE FINAL GRADE

NOTE:
DUE TO VARIATIONS IN SELECTED PRINTER SETTINGS, NOTED SCALES MAY NO LONGER BE APPLICABLE

BuildBlock® BUILDING SYSTEMS

9705 N. BROADWAY EXTENSION, SUITE 200, OKLAHOMA CITY, OK 73114
OFFICE: 405-840-3386 | TOLL FREE: 866-222-2575 | FAX: 831-597-0792
BUILDBLOCK.COM

BUILDBLOCK 6"& 8" LEDGE BLOCK APPLICATION 3

DATE/REV	11-25-06 /3	SCALE	NTS	DETAIL SHEET
NOTES				18

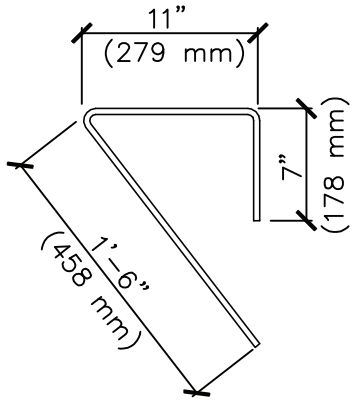

NOTE:
ALL BENDS PER ANSI &
STEEL INSTITUTE STANDARDS
-STEEL GRADES AS SPECIFIED
- DIMENSIONS TYPICAL FOR
ALL LEDGE BLOCK APPLICATIONS

3/19 STIRRUP DETAIL
SCALE: 1" = 1'-0"

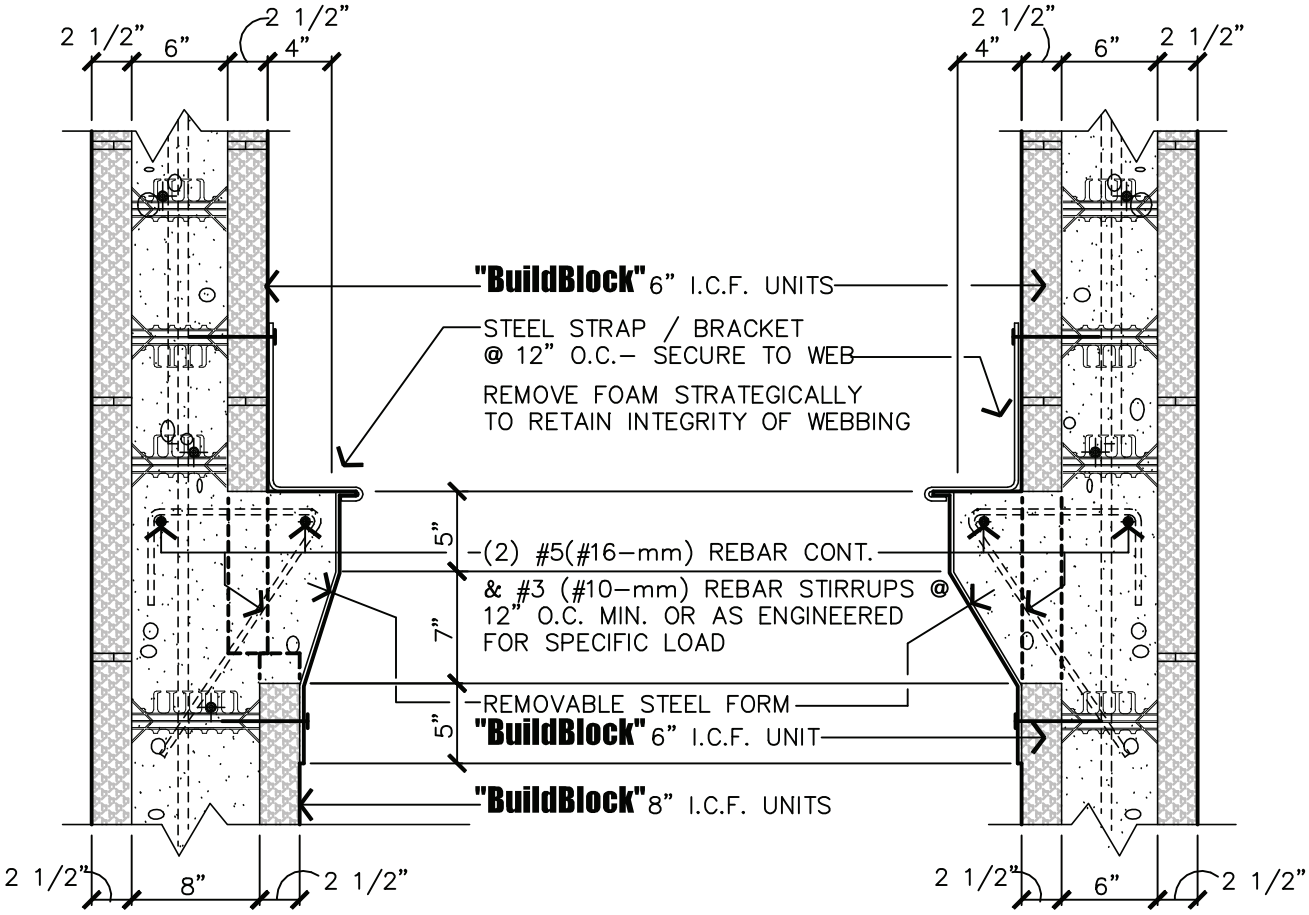

2/19 SECTION DETAIL
SCALE: 1" = 1'-0"

1/19 SECTION DETAIL
SCALE: 1" = 1'-0"

NOTE:
DUE TO VARIATIONS IN SELECTED
PRINTER SETTINGS, NOTED SCALES
MAY NO LONGER BE APPLICABLE

BuildBlock® BUILDING SYSTEMS

9705 N. BROADWAY EXTENSION, SUITE 200, OKLAHOMA CITY, OK 73114
OFFICE: 405-840-3386 | TOLL FREE: 866-222-2575 | FAX: 831-597-0792
BUILDBLOCK.COM

BUILDBLOCK 6" & 8" MASONRY LEDGE FORM DETAILS

DATE/REV	11-28-06 /3	SCALE	NTS	DETAIL SHEET
NOTES				19

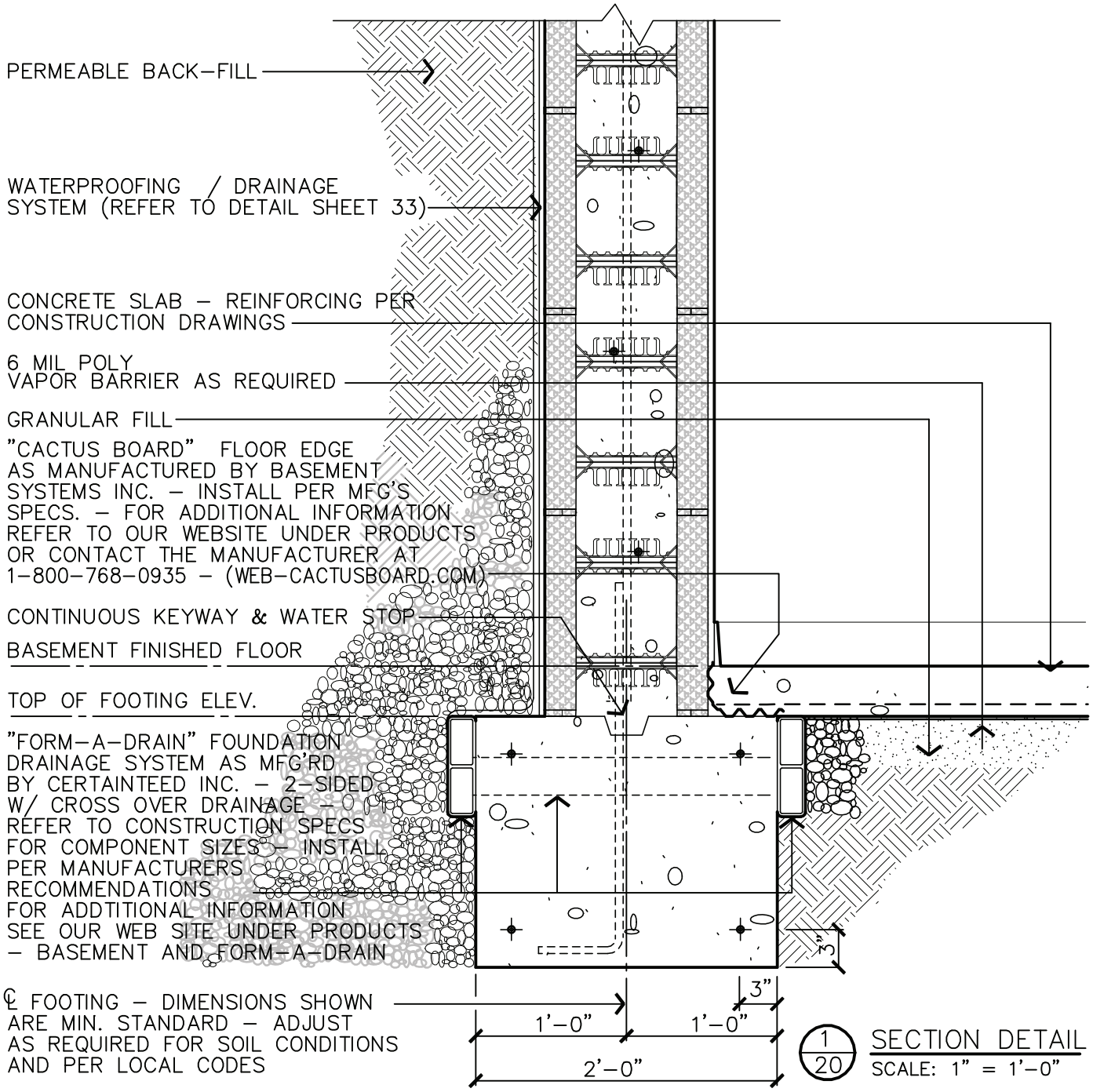

NOTE:
INSTALL APPROVED MEMBRANE WATER–PROOFING AT ALL SURFACES BELOW GRADE EXTEND 12" MIN. ABOVE FINAL GRADE

NOTE:
DUE TO VARIATIONS IN SELECTED PRINTER SETTINGS, NOTED SCALES MAY NO LONGER BE APPLICABLE

BuildBlock® BUILDING SYSTEMS

BUILDBLOCK BASEMENT FOUNDATION

DATE/REV	12-01-04 /1	SCALE	NTS	DETAIL SHEET
NOTES				20

9705 N. BROADWAY EXTENSION, SUITE 200, OKLAHOMA CITY, OK 73114
OFFICE: 405-840-3386 | TOLL FREE: 866-222-2575 | FAX: 831-597-0792
BUILDBLOCK.COM

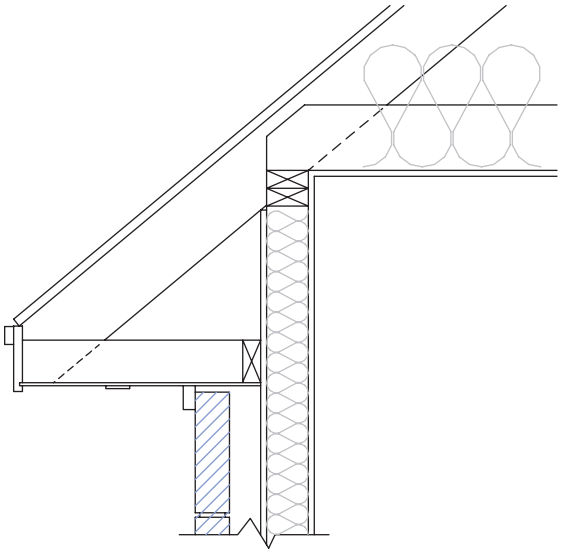

WOOD FRAME CORNICE
PER CONSTRUCTION DETAILS

1/29
FRAME SOLE PLATE
INTERSECTION

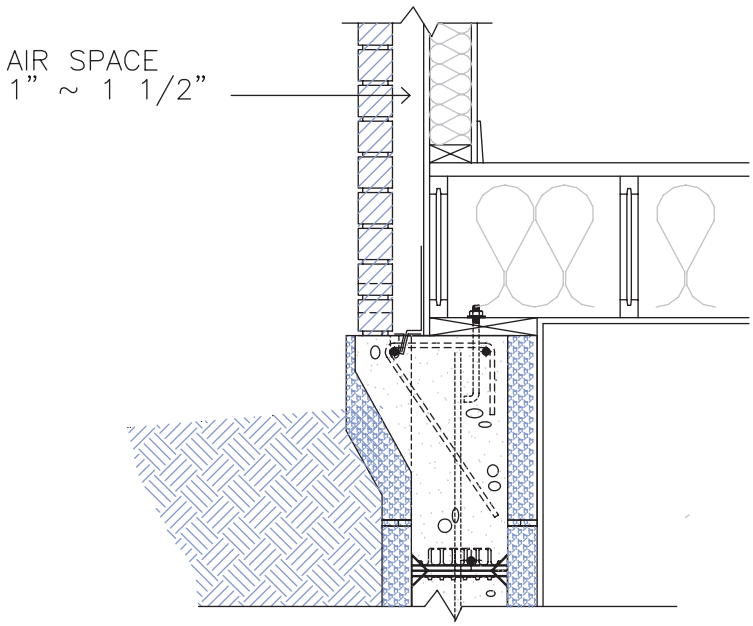

1/20
BASEMENT FOUNDATION

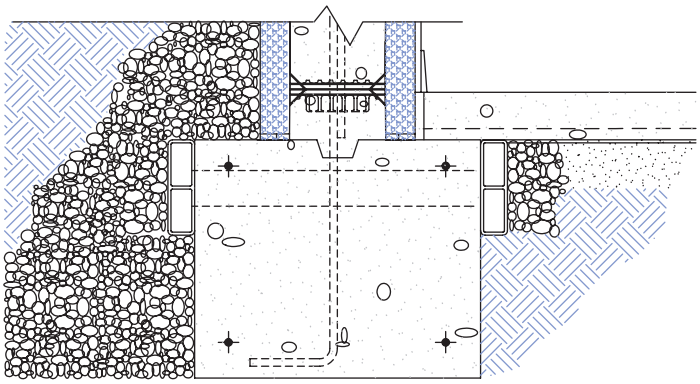

1/21
TYPICAL WALL
SECTION
SCALE: 3/4" = 1'-0"

NOTE:
DUE TO VARIATIONS IN SELECTED PRINTER SETTINGS, NOTED SCALES MAY NO LONGER BE APPLICABLE

BuildBlock® BUILDING SYSTEMS

9705 N. BROADWAY EXTENSION, SUITE 200, OKLAHOMA CITY, OK 73114
OFFICE: 405-840-3386 | TOLL FREE: 866-222-2575 | FAX: 831-597-0792
BUILDBLOCK.COM

BUILDBLOCK BASEMENT & WOOD FRAME

DATE/REV	11-17-09	SCALE	NTS	DETAIL SHEET
NOTES				21

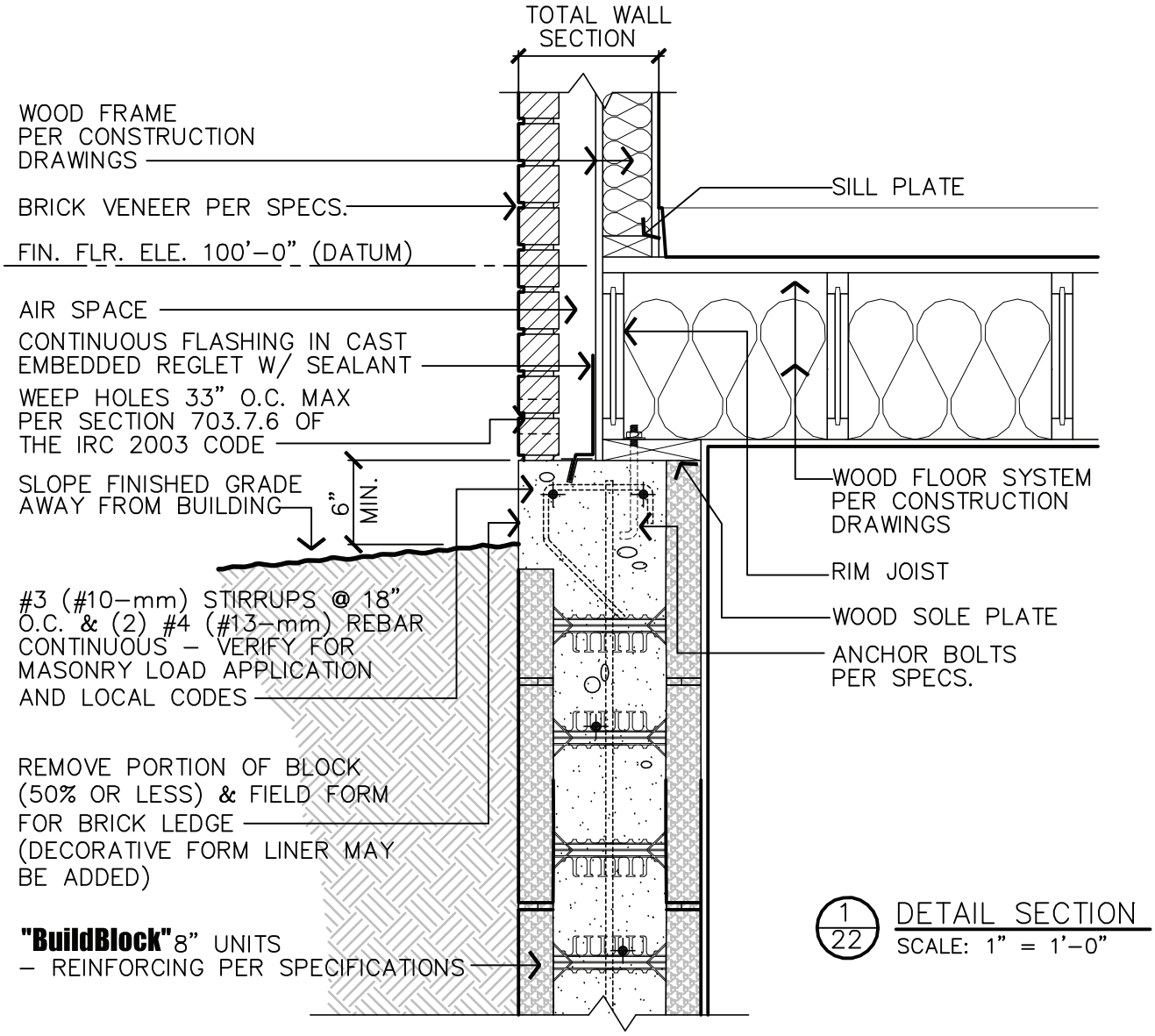

1/22 DETAIL SECTION
SCALE: 1" = 1'–0"

NOTE:
INSTALL APPROVED MEMBRANE WATER–PROOFING AT ALL SURFACES BELOW GRADE EXTEND 12" MIN. ABOVE FINAL GRADE

NOTE:
DUE TO VARIATIONS IN SELECTED PRINTER SETTINGS, NOTED SCALES MAY NO LONGER BE APPLICABLE

BuildBlock® BUILDING SYSTEMS

FRAME SOLE PLATE INTERSECTION

DATE/REV	10-04-07 /4	SCALE	NTS	DETAIL SHEET
NOTES				22

9705 N. BROADWAY EXTENSION, SUITE 200, OKLAHOMA CITY, OK 73114
OFFICE: 405-840-3386 | TOLL FREE: 866-222-2575 | FAX: 831-597-0792
BUILDBLOCK.COM

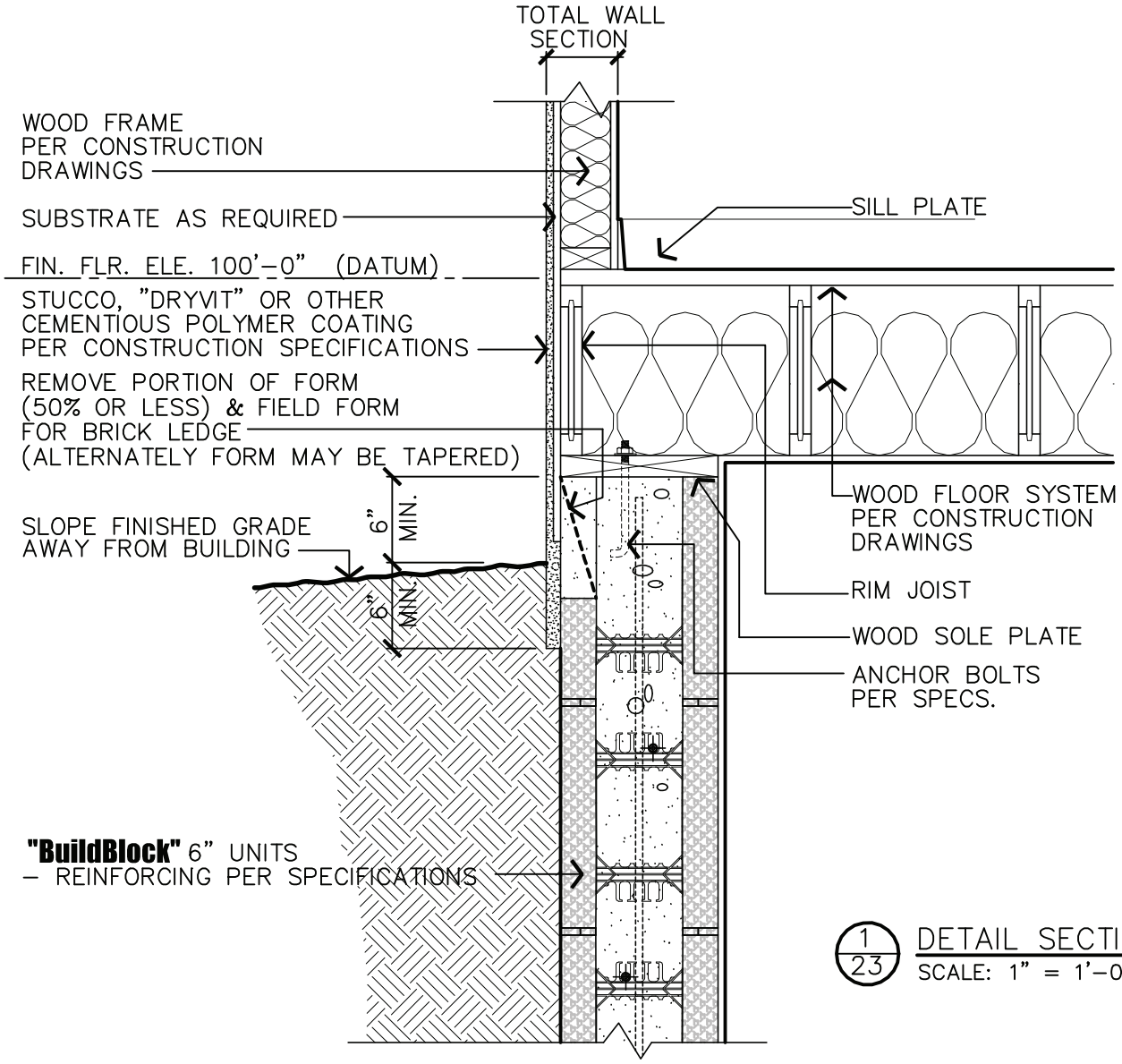

1/23 DETAIL SECTION
SCALE: 1" = 1'-0"

NOTE:
INSTALL APPROVED MEMBRANE WATER-PROOFING AT ALL SURFACES BELOW GRADE EXTEND 12" MIN. ABOVE FINAL GRADE

NOTE:
DUE TO VARIATIONS IN SELECTED PRINTER SETTINGS, NOTED SCALES MAY NO LONGER BE APPLICABLE

BuildBlock® BUILDING SYSTEMS

9705 N. BROADWAY EXTENSION, SUITE 200, OKLAHOMA CITY, OK 73114
OFFICE: 405-840-3386 | TOLL FREE: 866-222-2575 | FAX: 831-597-0792
BUILDBLOCK.COM

WOOD FRAME STUCCO ON BUILDBLOCK BASEMENT

DATE/REV	10-04-07 /3	SCALE	NTS	DETAIL SHEET
NOTES				23

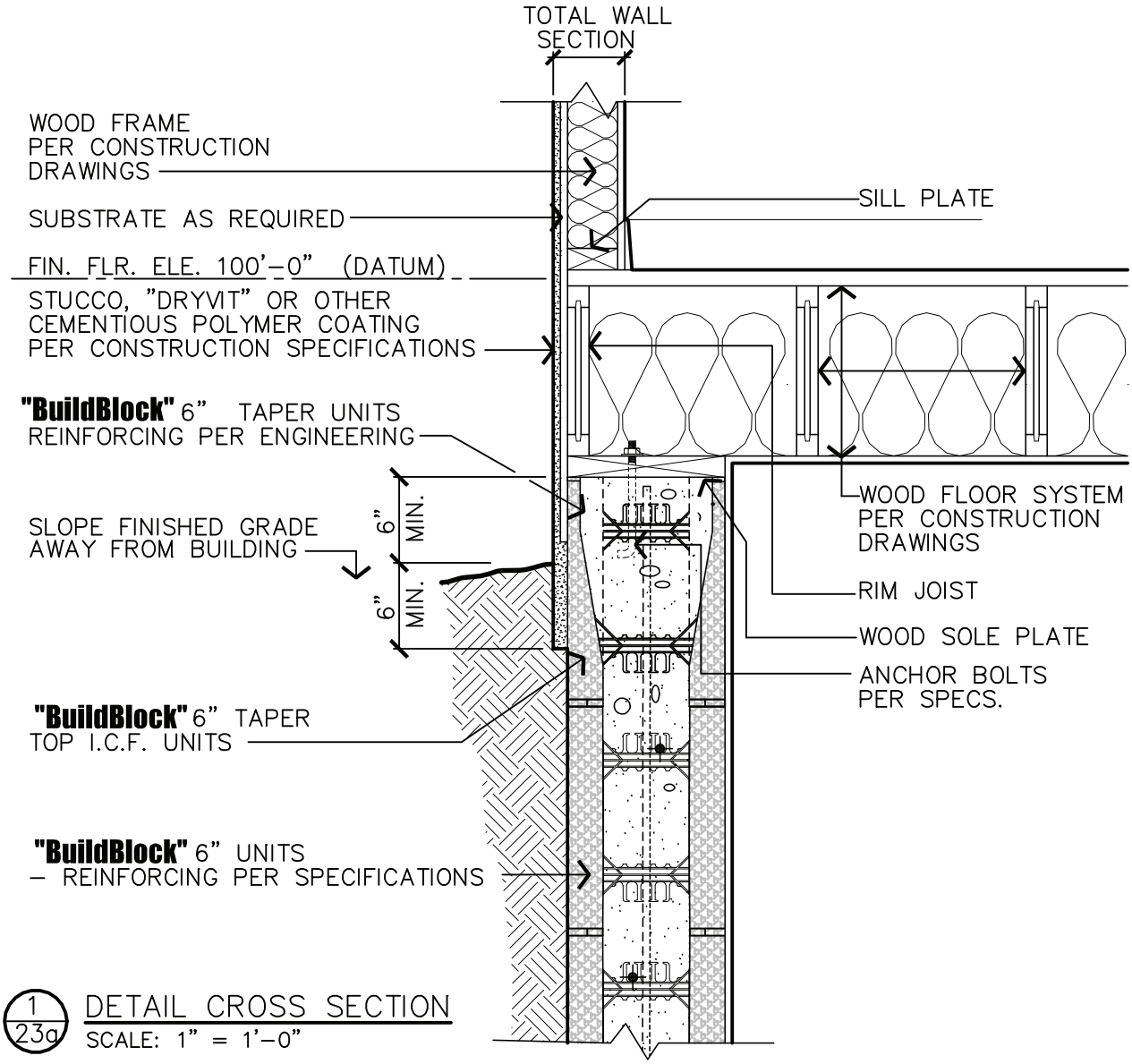

1 / 23a DETAIL CROSS SECTION
SCALE: 1" = 1'-0"

NOTES:

1. VARIATIONS IN IMPOSOSED LIVE & DEAD LOADS AND OTHER APPLICATION SPECIFIC VARIABLES REQUIRE ALL ASPECTS OF THE DETAILS SHOWN HERE TO BE DESIGNED AND /OR APPROVED BY A QUALIFIED ENGINEER
2. ALL CONSTRUCTION SHALL BE IN ACCORDANCE W/ THE SPECIFICATION OF AND THE RESPONSIBILITY OF A QUALIFIED STRUCTRURAL ENGINEER.
3. INSTALL APPROVED MEMBRANE WATER-PROOFING AT ALL SURFACES BELOW GRADE EXTEND 12" MIN. ABOVE FINAL GRADE

NOTE:
DUE TO VARIATIONS IN SELECTED PRINTER SETTINGS, NOTED SCALES MAY NO LONGER BE APPLICABLE

BuildBlock® BUILDING SYSTEMS

9705 N. BROADWAY EXTENSION, SUITE 200, OKLAHOMA CITY, OK 73114
OFFICE: 405-840-3386 | TOLL FREE: 866-222-2575 | FAX: 831-597-0792
BUILDBLOCK.COM

WOOD FRAME STUCCO ON BUILDBLOCK BASEMENT

DATE/REV	10-04-07 /2	SCALE	NTS	DETAIL SHEET
NOTES				23A

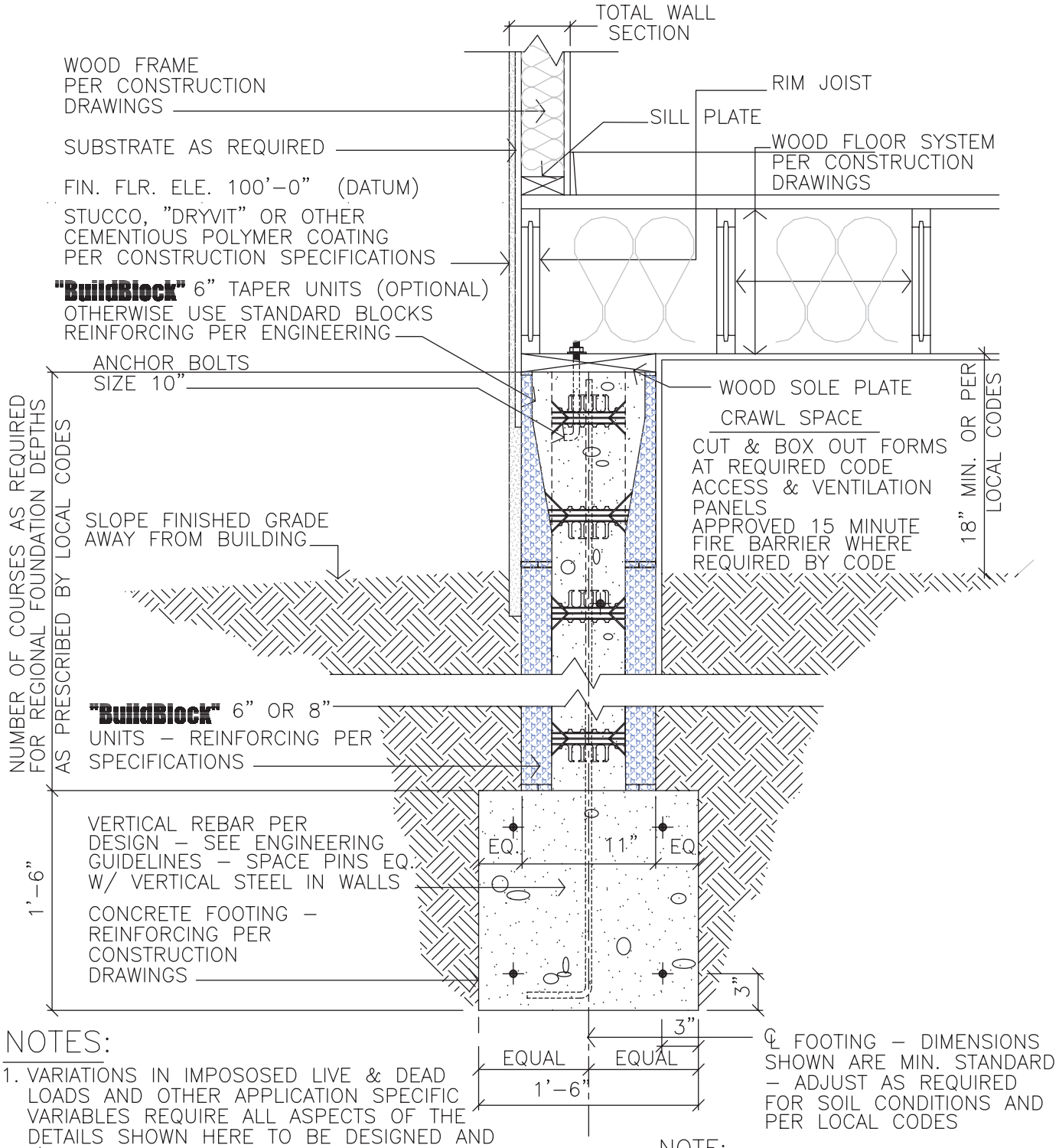

NOTES:

1. VARIATIONS IN IMPOSOSED LIVE & DEAD LOADS AND OTHER APPLICATION SPECIFIC VARIABLES REQUIRE ALL ASPECTS OF THE DETAILS SHOWN HERE TO BE DESIGNED AND /OR APPROVED BY A QUALIFIED ENGINEER
2. ALL CONSTRUCTION SHALL BE IN ACCORDANCE W/ THE SPECIFICATION OF AND THE RESPONSIBILITY OF A QUALIFIED STRUCTURAL ENGINEER.
3. INSTALL APPROVED MEMBRANE WATER–PROOFING AT ALL SURFACES BELOW GRADE EXTEND 12" MIN. ABOVE FINAL GRADE

NOTE:

DUE TO VARIATIONS IN SELECTED PRINTER SETTINGS, NOTED SCALES MAY NO LONGER BE APPLICABLE

1 / 23b DETAIL CROSS SECTION
SCALE: 1" = 1'–0"

BuildBlock® BUILDING SYSTEMS

9705 N. BROADWAY EXTENSION, SUITE 200, OKLAHOMA CITY, OK 73114
OFFICE: 405-840-3386 | TOLL FREE: 866-222-2575 | FAX: 831-597-0792
BUILDBLOCK.COM

WOOD FRAME STUCCO ON BUILDBLOCK CRAWL SPACE

DATE/REV	11-17-09	SCALE	NTS	DETAIL SHEET
NOTES				23B

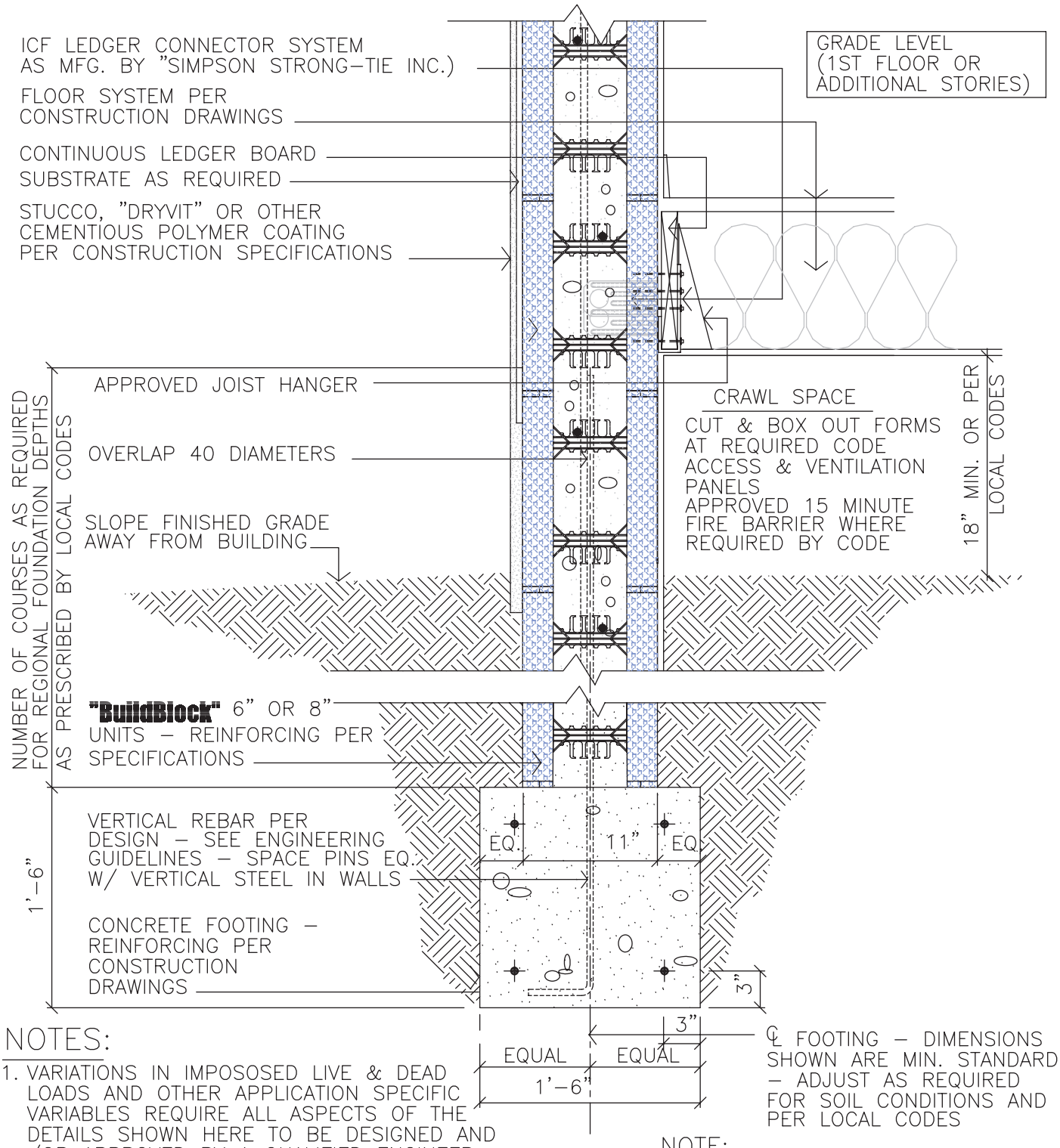

NOTES:

1. VARIATIONS IN IMPOSOSED LIVE & DEAD LOADS AND OTHER APPLICATION SPECIFIC VARIABLES REQUIRE ALL ASPECTS OF THE DETAILS SHOWN HERE TO BE DESIGNED AND /OR APPROVED BY A QUALIFIED ENGINEER
2. ALL CONSTRUCTION SHALL BE IN ACCORDANCE W/ THE SPECIFICATION OF AND THE RESPONSIBILITY OF A QUALIFIED STRUCTURAL ENGINEER.
3. INSTALL APPROVED MEMBRANE WATER-PROOFING AT ALL SURFACES BELOW GRADE EXTEND 12" MIN. ABOVE FINAL GRADE

NOTE:

DUE TO VARIATIONS IN SELECTED PRINTER SETTINGS, NOTED SCALES MAY NO LONGER BE APPLICABLE

1 / 23c DETAIL CROSS SECTION

SCALE: 1" = 1'-0"

BuildBlock® BUILDING SYSTEMS

9705 N. BROADWAY EXTENSION, SUITE 200, OKLAHOMA CITY, OK 73114
OFFICE: 405-840-3386 | TOLL FREE: 866-222-2575 | FAX: 831-597-0792
BUILDBLOCK.COM

STUCCO ON BUILDBLOCK & CRAWL SPACE

DATE/REV	11-17-09	SCALE	NTS	DETAIL SHEET
NOTES				23C

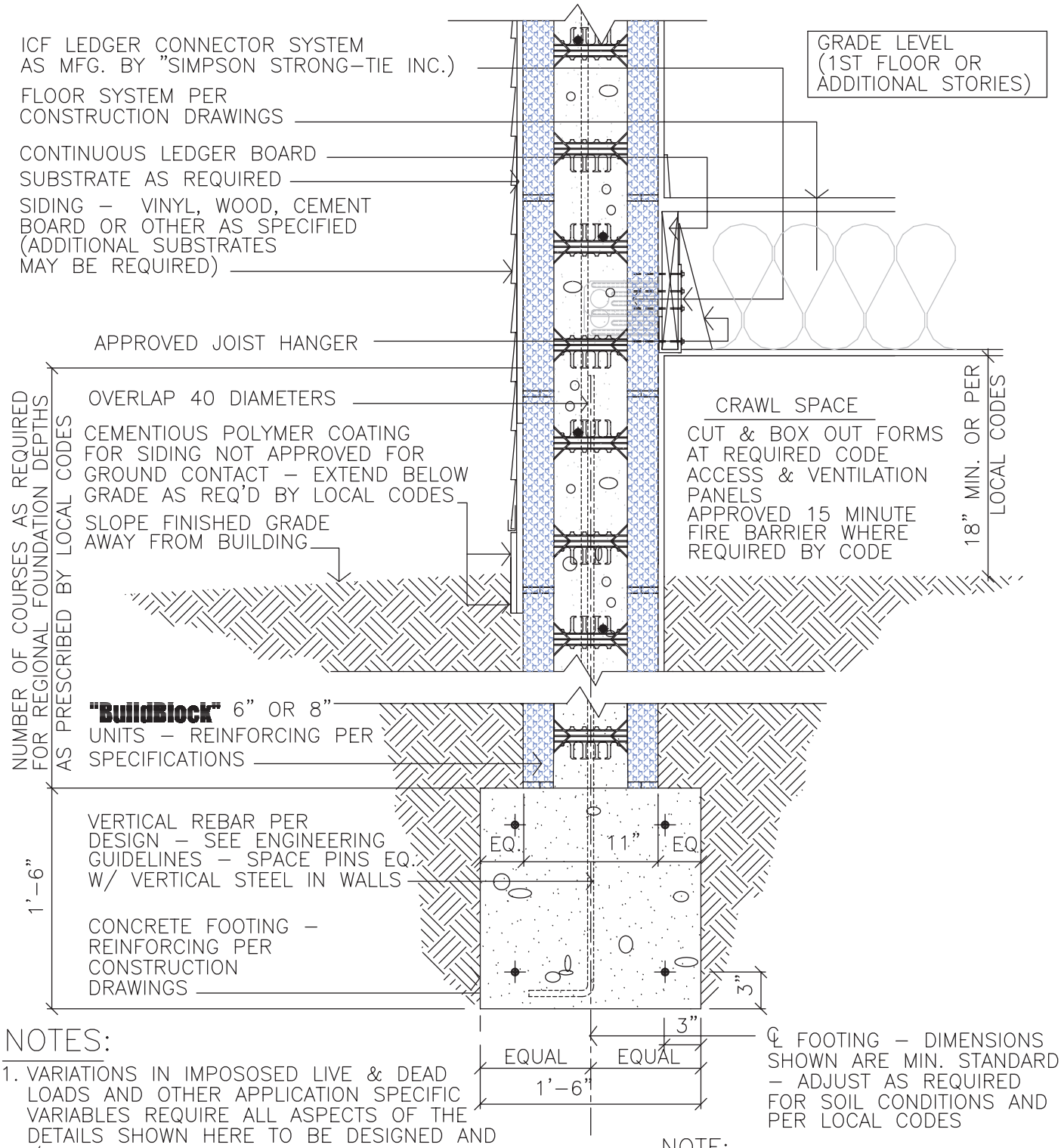

NOTES:

1. VARIATIONS IN IMPOSOSED LIVE & DEAD LOADS AND OTHER APPLICATION SPECIFIC VARIABLES REQUIRE ALL ASPECTS OF THE DETAILS SHOWN HERE TO BE DESIGNED AND /OR APPROVED BY A QUALIFIED ENGINEER
2. ALL CONSTRUCTION SHALL BE IN ACCORDANCE W/ THE SPECIFICATION OF AND THE RESPONSIBILITY OF A QUALIFIED STRUCTURAL ENGINEER.
3. INSTALL APPROVED MEMBRANE WATER–PROOFING AT ALL SURFACES BELOW GRADE EXTEND 12" MIN. ABOVE FINAL GRADE

NOTE:

DUE TO VARIATIONS IN SELECTED PRINTER SETTINGS, NOTED SCALES MAY NO LONGER BE APPLICABLE

1 / 23d DETAIL CROSS SECTION

SCALE: 1" = 1'–0"

BuildBlock® BUILDING SYSTEMS

9705 N. BROADWAY EXTENSION, SUITE 200, OKLAHOMA CITY, OK 73114
OFFICE: 405-840-3386 | TOLL FREE: 866-222-2575 | FAX: 831-597-0792
BUILDBLOCK.COM

SIDING ON BUILDBLOCK CRAWL SPACE

DATE/REV	11-17-09	SCALE	NTS	DETAIL SHEET
NOTES				23D

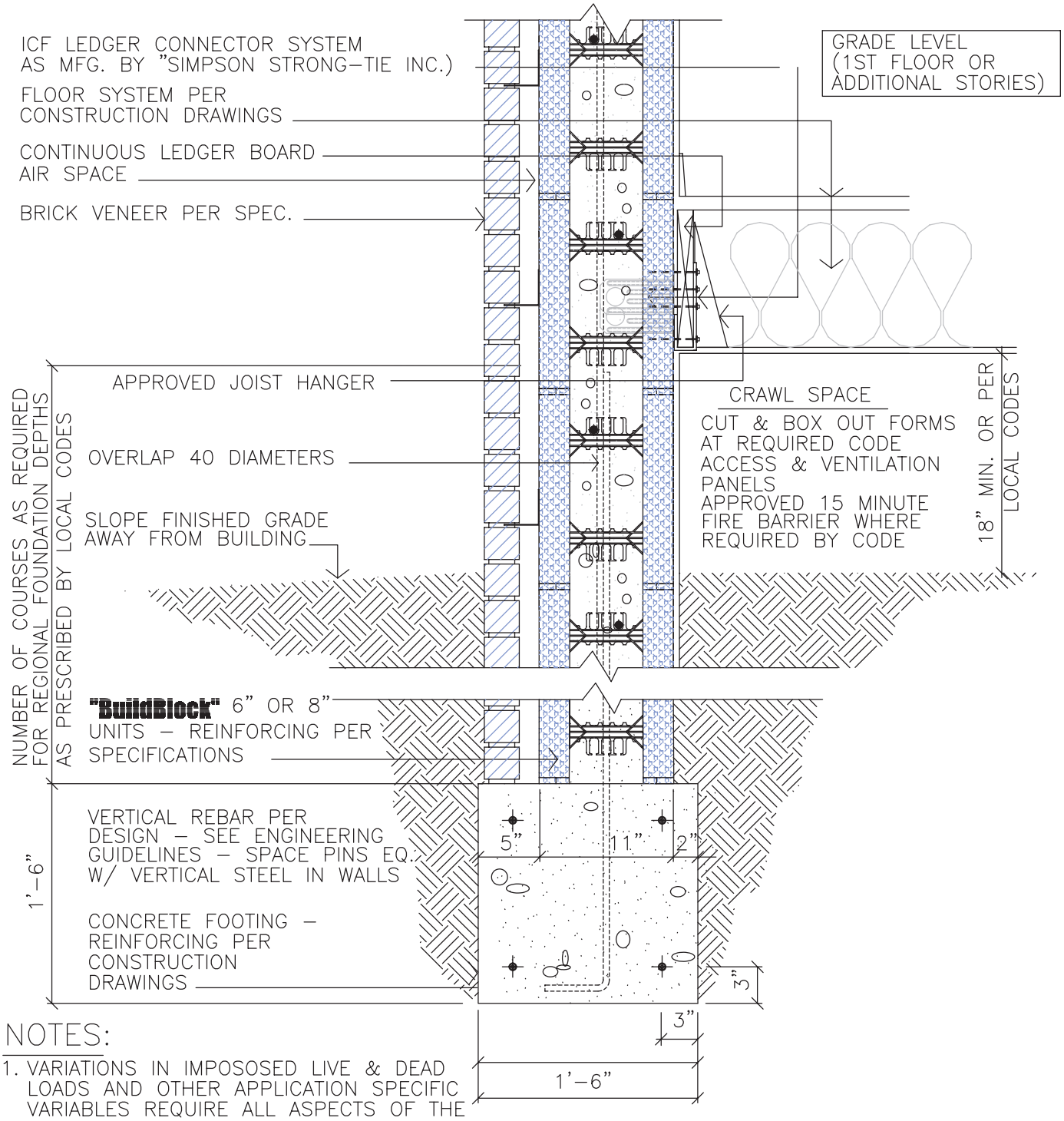

NOTES:

1. VARIATIONS IN IMPOSOSED LIVE & DEAD LOADS AND OTHER APPLICATION SPECIFIC VARIABLES REQUIRE ALL ASPECTS OF THE DETAILS SHOWN HERE TO BE DESIGNED AND /OR APPROVED BY A QUALIFIED ENGINEER
2. ALL CONSTRUCTION SHALL BE IN ACCORDANCE W/ THE SPECIFICATION OF AND THE RESPONSIBILITY OF A QUALIFIED STRUCTURAL ENGINEER.
3. INSTALL APPROVED MEMBRANE WATER-PROOFING AT ALL SURFACES BELOW GRADE EXTEND 12" MIN. ABOVE FINAL GRADE

NOTE:

DUE TO VARIATIONS IN SELECTED PRINTER SETTINGS, NOTED SCALES MAY NO LONGER BE APPLICABLE

1 / 23e DETAIL CROSS SECTION

SCALE: 1" = 1'-0"

BuildBlock BUILDING SYSTEMS

9705 N. BROADWAY EXTENSION, SUITE 200, OKLAHOMA CITY, OK 73114
OFFICE: 405-840-3386 | TOLL FREE: 866-222-2575 | FAX: 831-597-0792
BUILDBLOCK.COM

BRICK ON BUILDBLOCK CRAWL SPACE

DATE/REV	11-17-09	SCALE	NTS	DETAIL SHEET
NOTES				23E

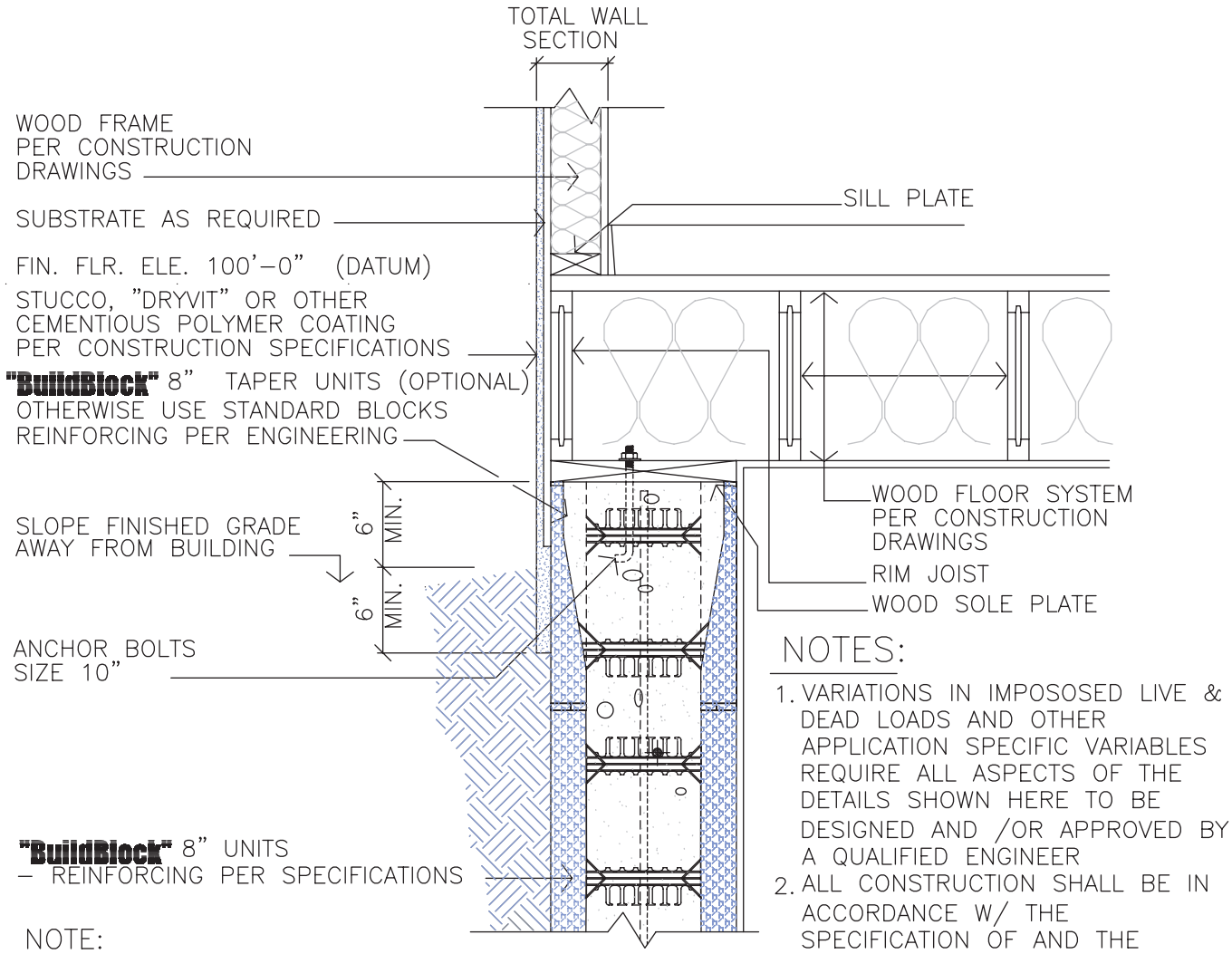

NOTE:

DUE TO VARIATIONS IN SELECTED PRINTER SETTINGS, NOTED SCALES MAY NO LONGER BE APPLICABLE

NOTES:

1. VARIATIONS IN IMPOSOSED LIVE & DEAD LOADS AND OTHER APPLICATION SPECIFIC VARIABLES REQUIRE ALL ASPECTS OF THE DETAILS SHOWN HERE TO BE DESIGNED AND /OR APPROVED BY A QUALIFIED ENGINEER
2. ALL CONSTRUCTION SHALL BE IN ACCORDANCE W/ THE SPECIFICATION OF AND THE RESPONSIBILITY OF A QUALIFIED STRUCTURAL ENGINEER.
3. INSTALL APPROVED MEMBRANE WATER–PROOFING AT ALL SURFACES BELOW GRADE EXTEND 12" MIN. ABOVE FINAL GRADE

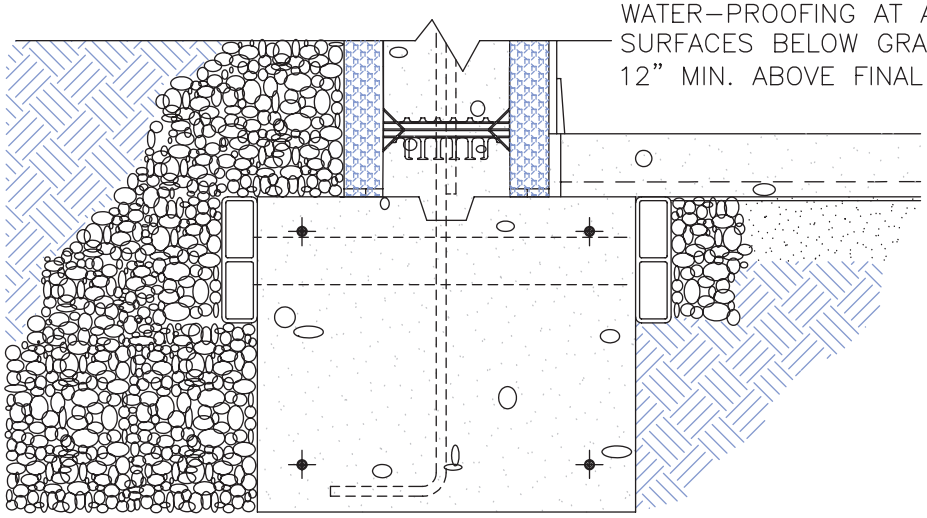

1/20

BASEMENT FOUNDATION

BuildBlock® BUILDING SYSTEMS

9705 N. BROADWAY EXTENSION, SUITE 200, OKLAHOMA CITY, OK 73114
OFFICE: 405-840-3386 | TOLL FREE: 866-222-2575 | FAX: 831-597-0792
BUILDBLOCK.COM

WOOD FRAME STUCCO ON BUILDBLOCK BASEMENT

DATE/REV	11-17-09	SCALE	NTS	DETAIL SHEET
NOTES				23F

CONSTRUCTION SHALL BE IN ACCORDANCE WITH ALL APPLICABLE LOCAL AND NATIONAL CODES. ALL DRAWINGS ARE SUBJECT TO CHANGE WITHOUT NOTICE.

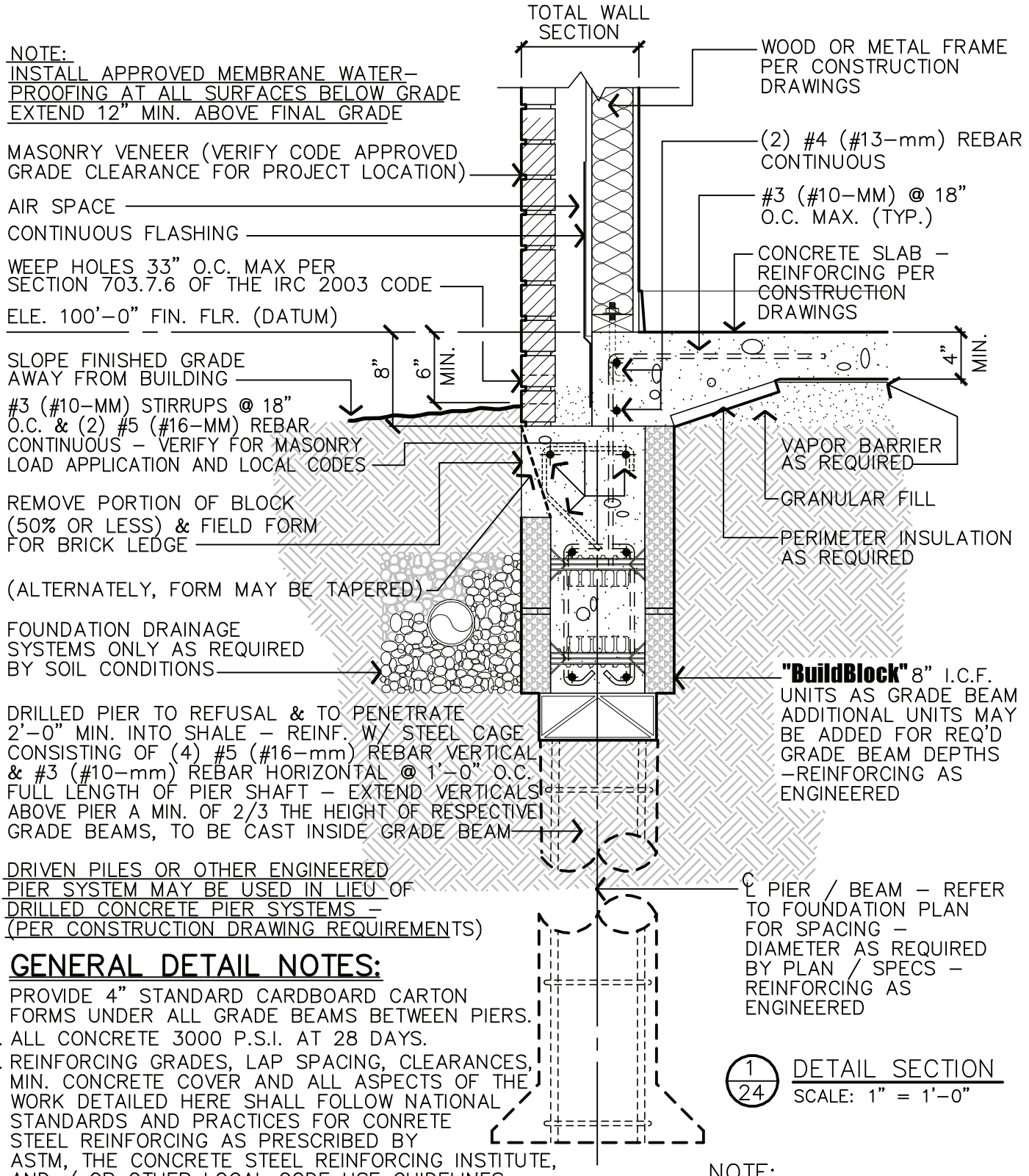

GENERAL DETAIL NOTES:

1. PROVIDE 4" STANDARD CARDBOARD CARTON FORMS UNDER ALL GRADE BEAMS BETWEEN PIERS.
2. ALL CONCRETE 3000 P.S.I. AT 28 DAYS.
3. REINFORCING GRADES, LAP SPACING, CLEARANCES, MIN. CONCRETE COVER AND ALL ASPECTS OF THE WORK DETAILED HERE SHALL FOLLOW NATIONAL STANDARDS AND PRACTICES FOR CONRETE STEEL REINFORCING AS PRESCRIBED BY ASTM, THE CONCRETE STEEL REINFORCING INSTITUTE, AND / OR OTHER LOCAL CODE USE GUIDELINES.

1/24 DETAIL SECTION
SCALE: 1" = 1'-0"

NOTE:
DUE TO VARIATIONS IN SELECTED PRINTER SETTINGS, NOTED SCALES MAY NO LONGER BE APPLICABLE

BuildBlock BUILDING SYSTEMS

9705 N. BROADWAY EXTENSION, SUITE 200, OKLAHOMA CITY, OK 73114
OFFICE: 405-840-3386 | TOLL FREE: 866-222-2575 | FAX: 831-597-0792
BUILDBLOCK.COM

BUILDBLOCK ON PIERS 1

DATE/REV	11-28-06 /3	SCALE	NTS	DETAIL SHEET
NOTES				24

CONSTRUCTION SHALL BE IN ACCORDANCE WITH ALL APPLICABLE LOCAL AND NATIONAL CODES. ALL DRAWINGS ARE SUBJECT TO CHANGE WITHOUT NOTICE.

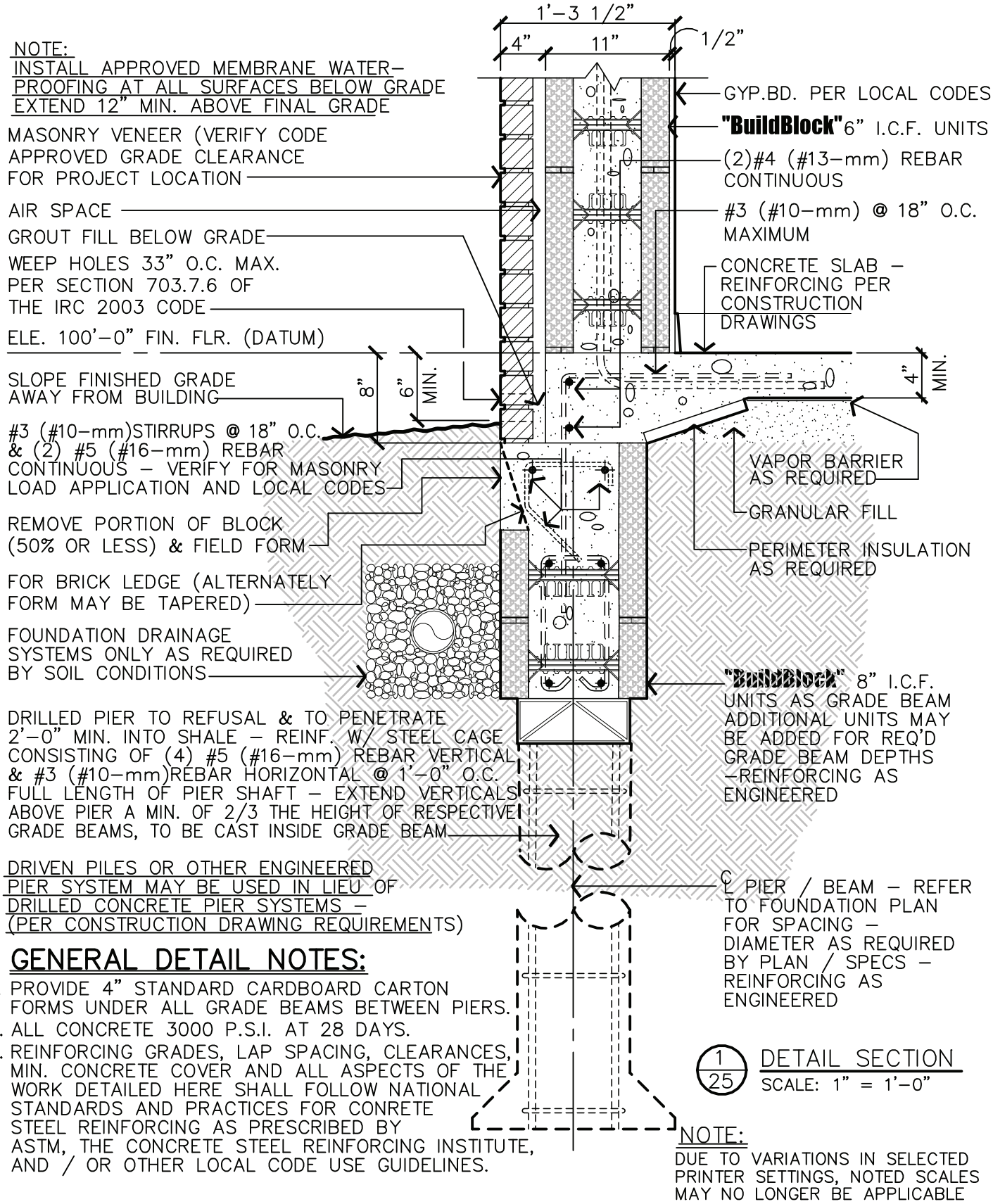

GENERAL DETAIL NOTES:

1. PROVIDE 4" STANDARD CARDBOARD CARTON FORMS UNDER ALL GRADE BEAMS BETWEEN PIERS.
2. ALL CONCRETE 3000 P.S.I. AT 28 DAYS.
3. REINFORCING GRADES, LAP SPACING, CLEARANCES, MIN. CONCRETE COVER AND ALL ASPECTS OF THE WORK DETAILED HERE SHALL FOLLOW NATIONAL STANDARDS AND PRACTICES FOR CONRETE STEEL REINFORCING AS PRESCRIBED BY ASTM, THE CONCRETE STEEL REINFORCING INSTITUTE, AND / OR OTHER LOCAL CODE USE GUIDELINES.

NOTE:
DUE TO VARIATIONS IN SELECTED PRINTER SETTINGS, NOTED SCALES MAY NO LONGER BE APPLICABLE

BuildBlock BUILDING SYSTEMS

9705 N. BROADWAY EXTENSION, SUITE 200, OKLAHOMA CITY, OK 73114
OFFICE: 405-840-3386 | TOLL FREE: 866-222-2575 | FAX: 831-597-0792
BUILDBLOCK.COM

BUILDBLOCK ON PIERS 2

DATE/REV	11-28-06 /3	SCALE	NTS	DETAIL SHEET
NOTES				25

GENERAL DETAIL NOTES:

1. PROVIDE 4" STANDARD CARDBOARD CARTON FORMS UNDER ALL GRADE BEAMS BETWEEN PIERS.
2. ALL CONCRETE 3000 P.S.I. AT 28 DAYS.
3. REINFORCING GRADES, LAP SPACING, CLEARANCES, MIN. CONCRETE COVER AND ALL ASPECTS OF THE WORK DETAILED HERE SHALL FOLLOW NATIONAL STANDARDS AND PRACTICES FOR CONRETE STEEL REINFORCING AS PRESCRIBED BY ASTM, THE CONCRETE STEEL REINFORCING INSTITUTE, AND / OR OTHER LOCAL CODE USE GUIDELINES.

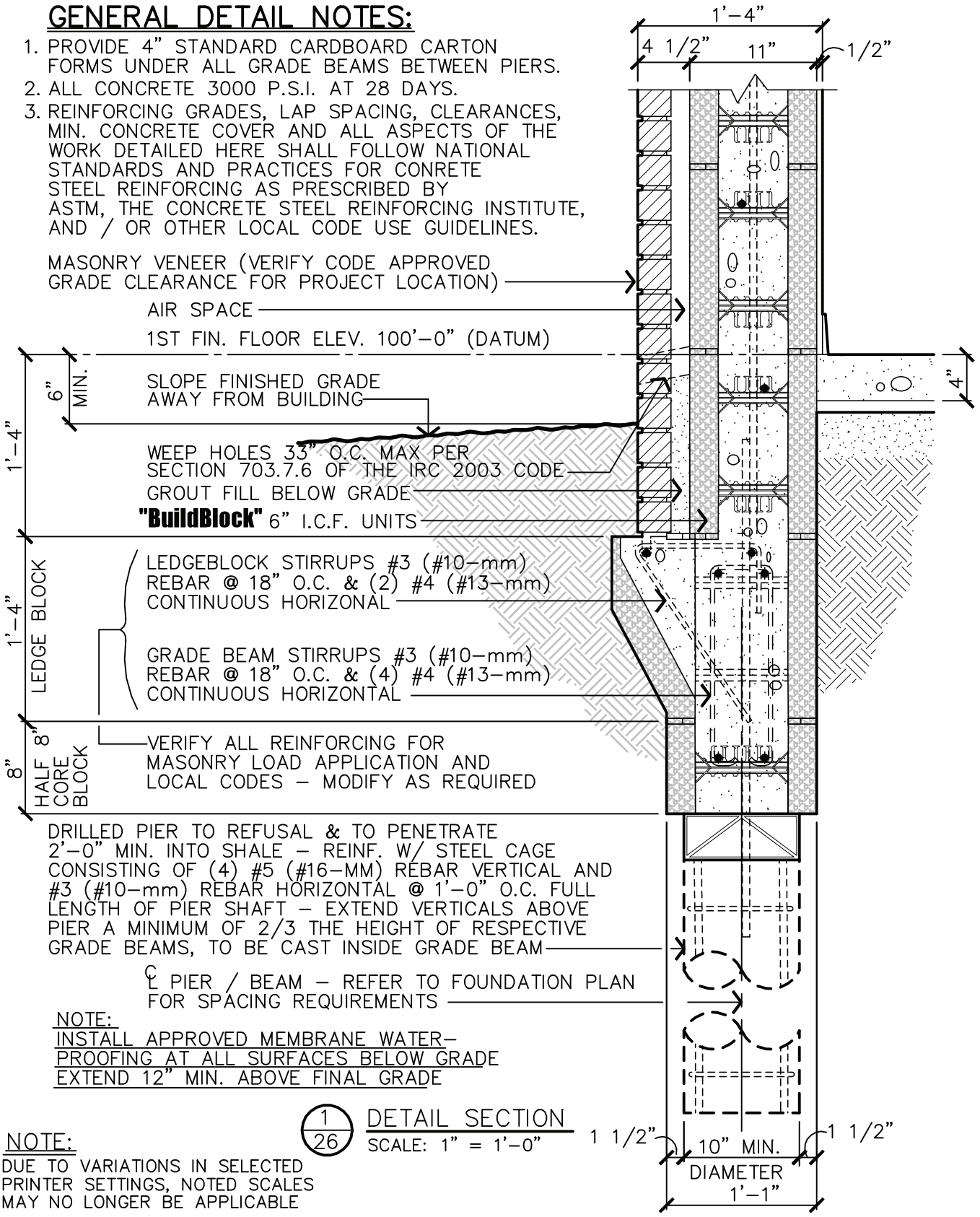

NOTE:
INSTALL APPROVED MEMBRANE WATER-PROOFING AT ALL SURFACES BELOW GRADE EXTEND 12" MIN. ABOVE FINAL GRADE

1/26 DETAIL SECTION
SCALE: 1" = 1'-0"

NOTE:
DUE TO VARIATIONS IN SELECTED PRINTER SETTINGS, NOTED SCALES MAY NO LONGER BE APPLICABLE

BuildBlock BUILDING SYSTEMS

9705 N. BROADWAY EXTENSION, SUITE 200, OKLAHOMA CITY, OK 73114
OFFICE: 405-840-3386 | TOLL FREE: 866-222-2575 | FAX: 831-597-0792
BUILDBLOCK.COM

BUILDBLOCK ON PIERS 3

DATE/REV	11-28-06 /2	SCALE	NTS	DETAIL SHEET
NOTES				26

CONSTRUCTION SHALL BE IN ACCORDANCE WITH ALL APPLICABLE LOCAL AND NATIONAL CODES. ALL DRAWINGS ARE SUBJECT TO CHANGE WITHOUT NOTICE.

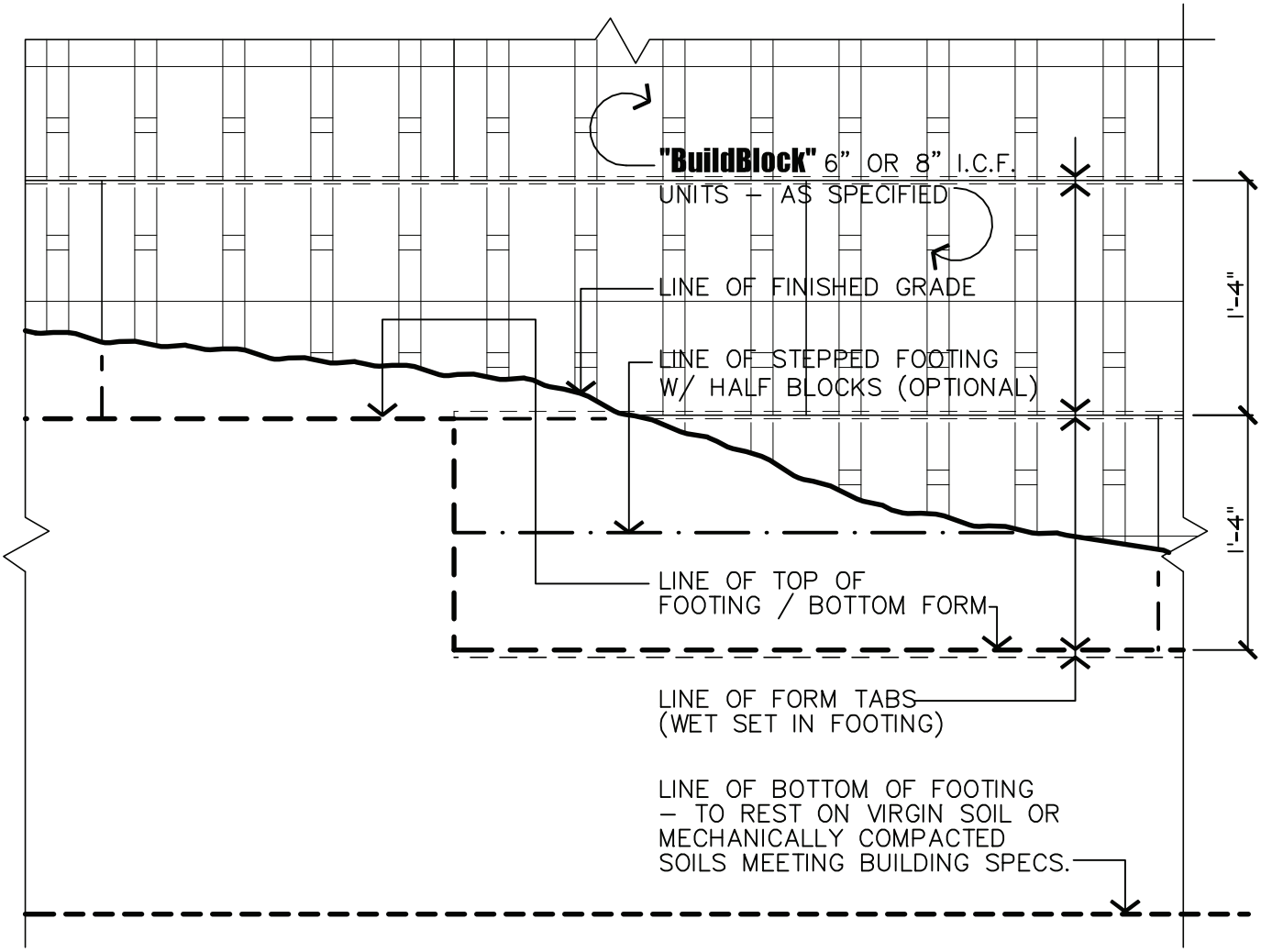

GENERAL DETAIL NOTES:

1. FOOTING STEPS ARE RECOMMENDED TO BE IN INCREMENTS OF 6" HORIZONTALLY AND 8" (HALF BLOCKS) OR 16" VERTICALLY TO MATCH "BUILD BLOCK" VERTICAL COURSING.
2. BOTTOM OF FOOTING SLOPE PERCENTAGE SHALL CONFORM TO ALL PRESCRIBED LOCAL BUILDING CODES AND STANDARDS
3. ALL FOOTING REINFORCING PER CONSTRUCTION DRAWINGS AND SPECIFICATIONS – VERTICAL TIE BARS REQUIRED

1/27 DETAIL ELEVATION
SCALE: 1" = 1'–0"

NOTE:
DUE TO VARIATIONS IN SELECTED PRINTER SETTINGS, NOTED SCALES MAY NO LONGER BE APPLICABLE

BuildBlock® BUILDING SYSTEMS

9705 N. BROADWAY EXTENSION, SUITE 200, OKLAHOMA CITY, OK 73114
OFFICE: 405-840-3386 | TOLL FREE: 866-222-2575 | FAX: 831-597-0792
BUILDBLOCK.COM

DETAIL OF STEPPED FOOTINGS

DATE/REV	12-01-04 /1	SCALE	NTS	DETAIL SHEET
NOTES				27

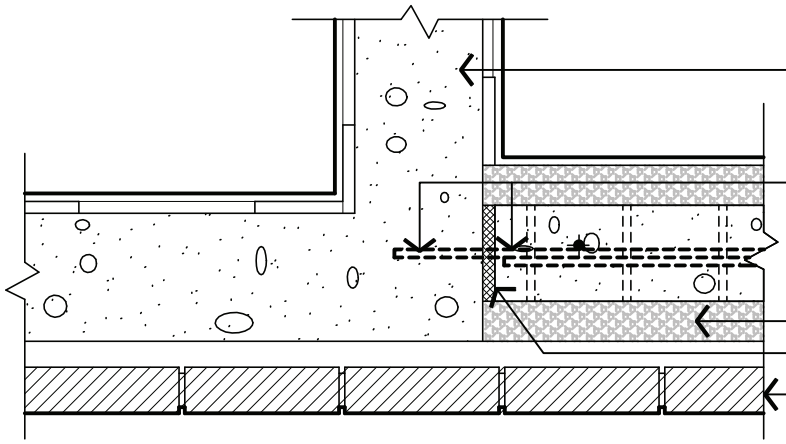

3/28 PLAN SECTION – CONCRETE WALL INTERSECTIONS
SCALE: 1" = 1'–0"

C.M.U & CONCRETE INTERSECTIONS REQUIRING EXPANSION CONTROL SHALL USE SMOOTH DOWELS IN PLACE OF DEFORMED REINFORCING BARS

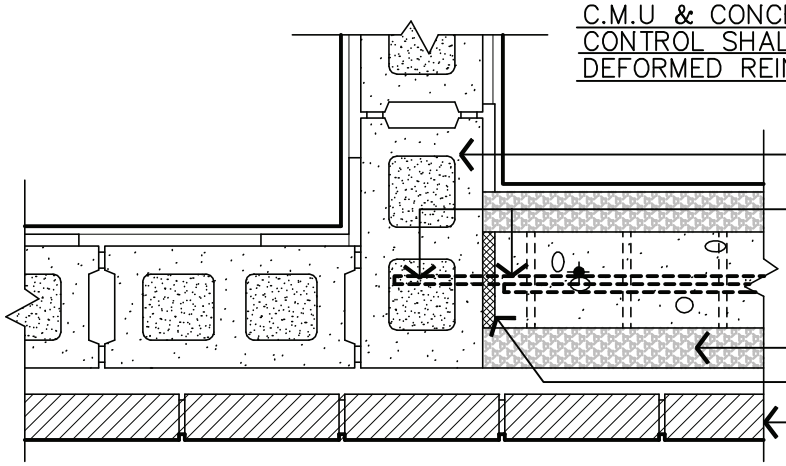

2/28 PLAN SECTION C.M.U. INTERSECTIONS
SCALE: 1" = 1'–0"

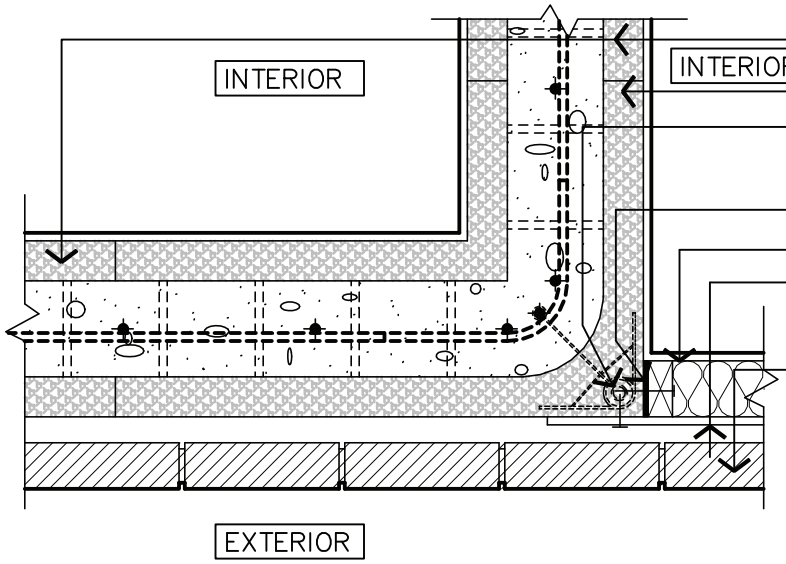

1/28 PLAN SECTION FRAME INTERSECTIONS
SCALE: 1" = 1'–0"

NOTE:
DUE TO VARIATIONS IN SELECTED PRINTER SETTINGS, NOTED SCALES MAY NO LONGER BE APPLICABLE

BuildBlock BUILDING SYSTEMS

9705 N. BROADWAY EXTENSION, SUITE 200, OKLAHOMA CITY, OK 73114
OFFICE: 405-840-3386 | TOLL FREE: 866-222-2575 | FAX: 831-597-0792
BUILDBLOCK.COM

HORIZONTAL INTERSECTION

DATE/REV	12-01-04 /1	SCALE	NTS	DETAIL SHEET
NOTES				28

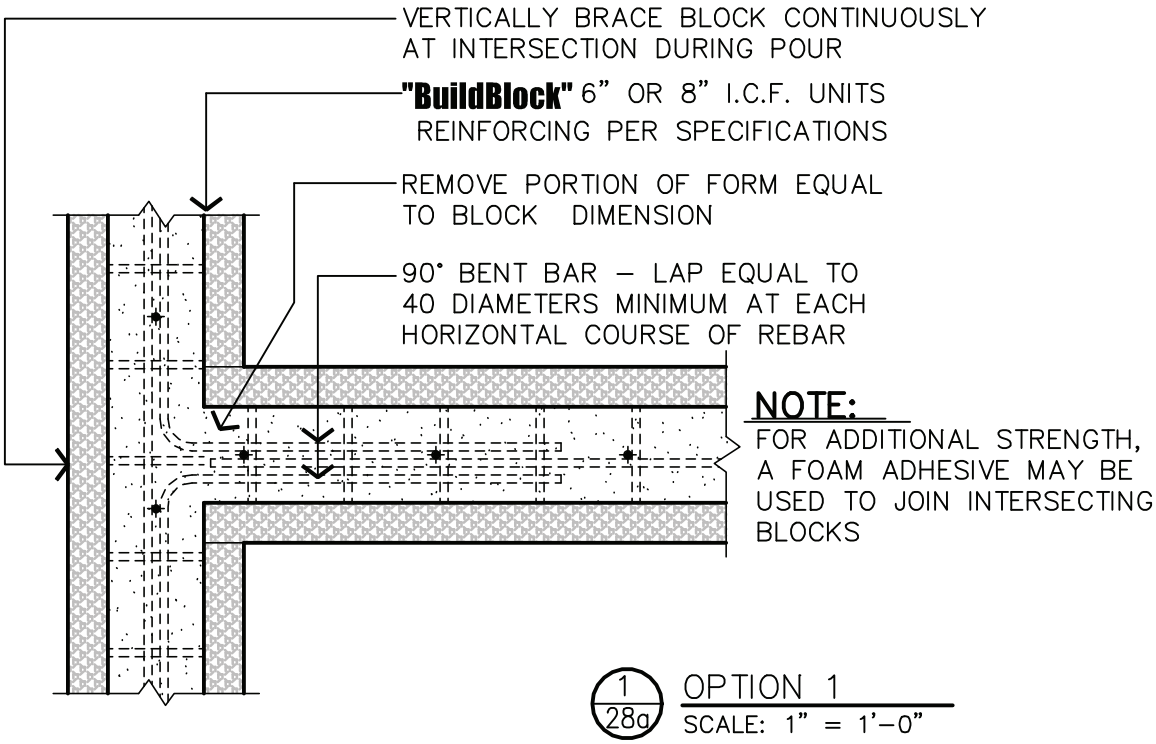

1 / 28a OPTION 1
SCALE: 1" = 1'–0"

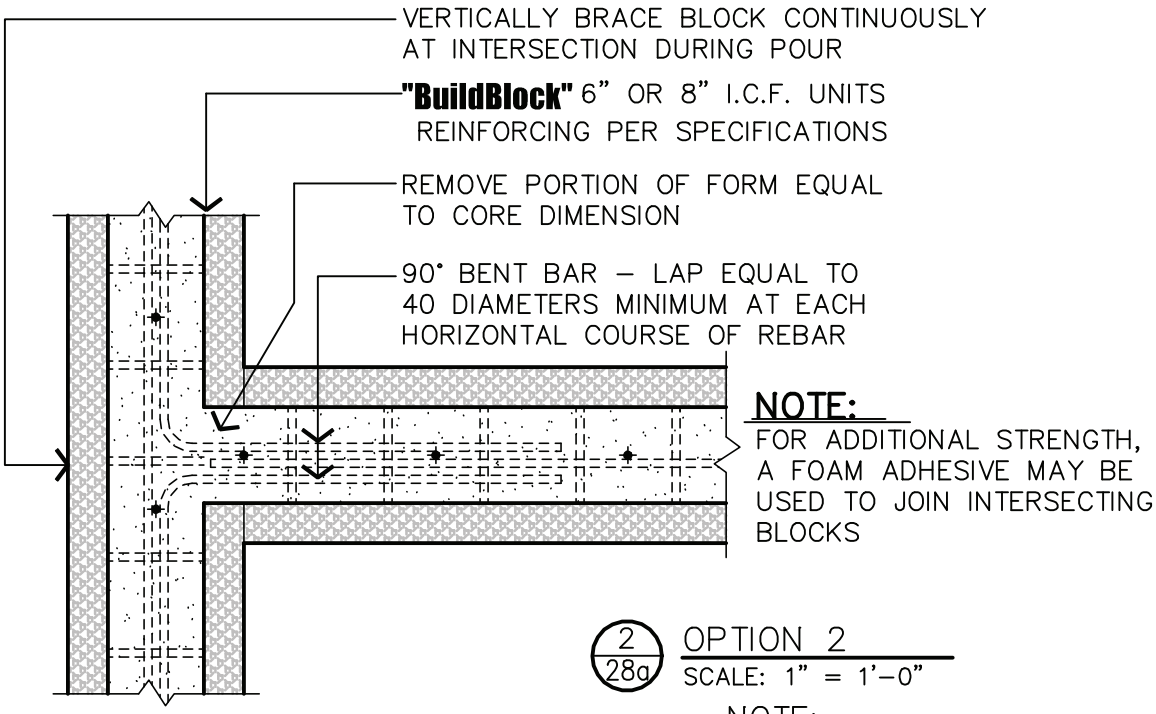

2 / 28a OPTION 2
SCALE: 1" = 1'–0"

NOTE:
DUE TO VARIATIONS IN SELECTED PRINTER SETTINGS, NOTED SCALES MAY NO LONGER BE APPLICABLE

BuildBlock® BUILDING SYSTEMS

9705 N. BROADWAY EXTENSION, SUITE 200, OKLAHOMA CITY, OK 73114
OFFICE: 405-840-3386 | TOLL FREE: 866-222-2575 | FAX: 831-597-0792
BUILDBLOCK.COM

"T" INTERSECTIONS

DATE/REV	08-05-05 /1	SCALE	NTS	DETAIL SHEET
NOTES				28A

TYPICAL CUT-OUTS SHALL BE PLACED BETWEEN WEBBING TO RETAIN THE INTEGRITY OF THE FORM

ALL OPENINGS SHALL BE 1/2" LESS THAN THE VERTICAL HGT. OF THE APPLIED LEDGE MEMBER –CENTER LEDGE ON OPENING

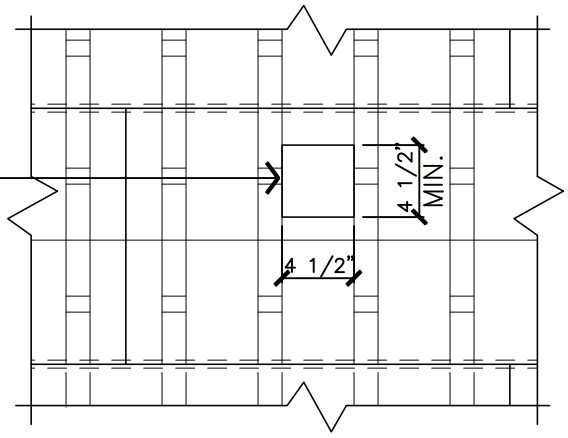

3/29 ELEVATION
TYPICAL CUT-OUT
SCALE: 1" = 1'-0"

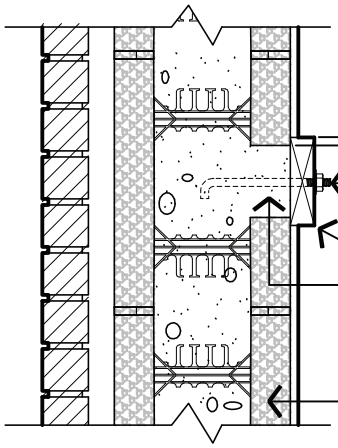

1/2" MIN. (BOTH SIDE OF OPENING)

NOTE:
ATTACH CONTINUOUS WOOD CLEAT TO WEBBING W/ ADEQUATE SCREWS TO PROVIDE A DAM DURING CONCRETE POUR

CAST EMBEDDED ANCHOR BOLTS – TYPE & FREQUENCY AS REQUIRED BY APPLICATION LOAD

2x6 MIN. DIMENSIONAL LUMBER (CONTINUOUS)

CUT AND REMOVE REQUIRED PORTION OF FORM TO EXTEND CONCRETE CORE TO WOOD CLEAT (CONTINUOUS CONTACT) – DO NOT CUT OPENING THROUGH WEBBING

"BuildBlock" 6" OR 8" I.C.F. UNITS

2/29 VERTICAL SECTION
MODERATE & HEAVY LOADS
SCALE: 1" = 1'-0"

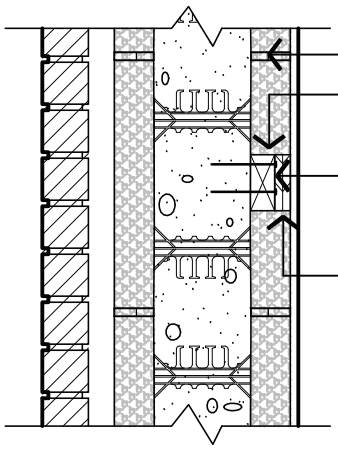

"BuildBlock" 6" OR 8" I.C.F. UNITS

CUT AND REMOVE REQUIRED PORTION OF FORM TO RECEIVE WOOD NAILER POST CONCRETE POUR

2x_ DIMENSIONAL LUMBER ATTACHED W/ POWDER ACTUATED FASTENERS

PLYWOOD OR OTHER WOOD FILLER FLUSH TO FORM FACE – FASTEN TO 2x_ NAILER

1/29 VERTICAL SECTION
LIGHT & MODERATE LOADS
SCALE: 1" = 1'-0"

NOTE:
DUE TO VARIATIONS IN SELECTED PRINTER SETTINGS, NOTED SCALES MAY NO LONGER BE APPLICABLE

BuildBlock® BUILDING SYSTEMS

9705 N. BROADWAY EXTENSION, SUITE 200, OKLAHOMA CITY, OK 73114
OFFICE: 405-840-3386 | TOLL FREE: 866-222-2575 | FAX: 831-597-0792
BUILDBLOCK.COM

LOAD HANGING DETAILS

DATE/REV	12-01-04 /1	SCALE	NTS	DETAIL SHEET
NOTES				29

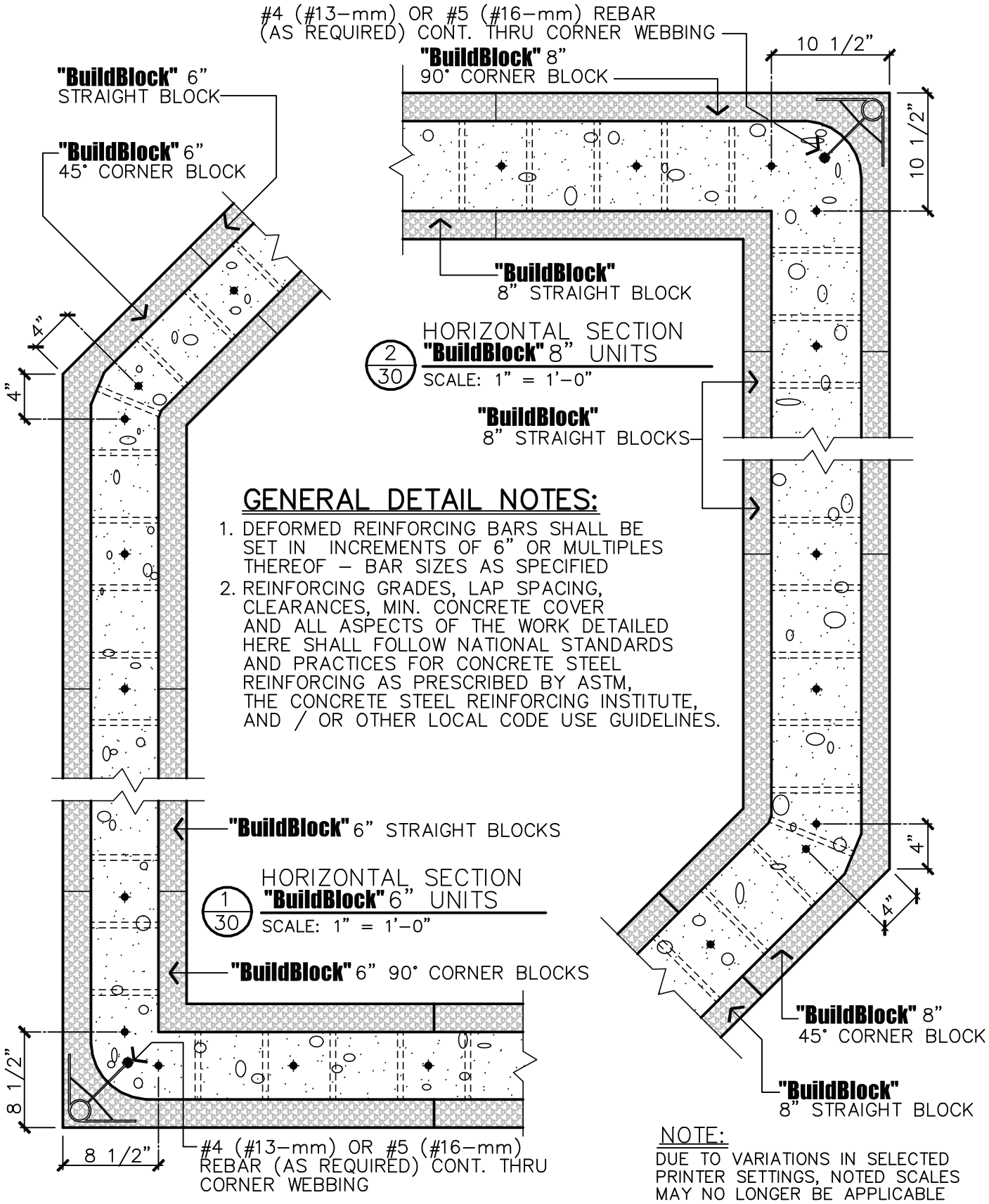

GENERAL DETAIL NOTES:

1. DEFORMED REINFORCING BARS SHALL BE SET IN INCREMENTS OF 6" OR MULTIPLES THEREOF – BAR SIZES AS SPECIFIED
2. REINFORCING GRADES, LAP SPACING, CLEARANCES, MIN. CONCRETE COVER AND ALL ASPECTS OF THE WORK DETAILED HERE SHALL FOLLOW NATIONAL STANDARDS AND PRACTICES FOR CONCRETE STEEL REINFORCING AS PRESCRIBED BY ASTM, THE CONCRETE STEEL REINFORCING INSTITUTE, AND / OR OTHER LOCAL CODE USE GUIDELINES.

NOTE:
DUE TO VARIATIONS IN SELECTED PRINTER SETTINGS, NOTED SCALES MAY NO LONGER BE APPLICABLE

BuildBlock® BUILDING SYSTEMS

9705 N. BROADWAY EXTENSION, SUITE 200, OKLAHOMA CITY, OK 73114
OFFICE: 405-840-3386 | TOLL FREE: 866-222-2575 | FAX: 831-597-0792
BUILDBLOCK.COM

VERTICAL REINFORCING

DATE/REV	11-28-06 /2	SCALE	NTS	DETAIL SHEET
NOTES				30

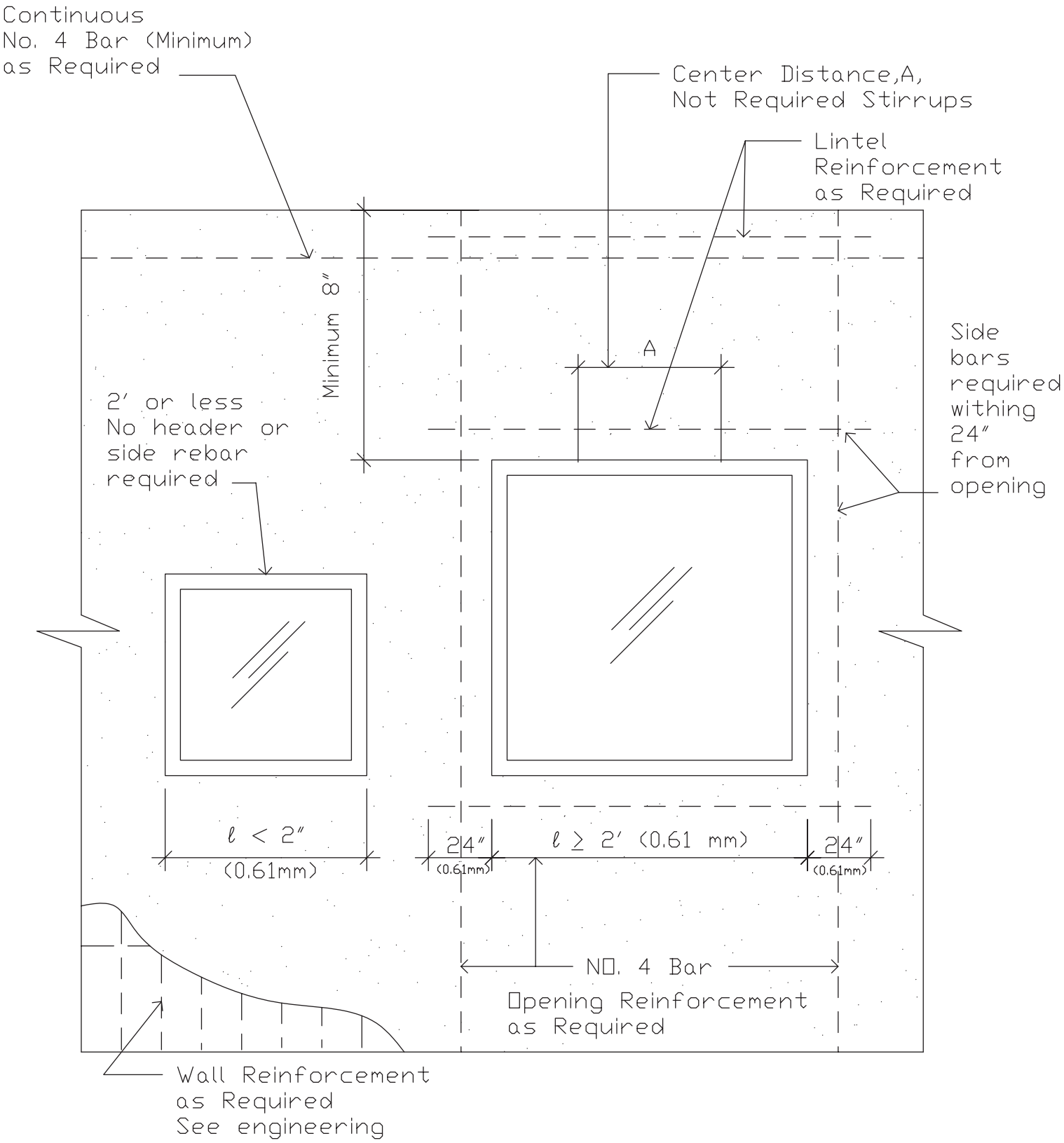

BuildBlock® BUILDING SYSTEMS

9705 N. BROADWAY EXTENSION, SUITE 200, OKLAHOMA CITY, OK 73114
OFFICE: 405-840-3386 | TOLL FREE: 866-222-2575 | FAX: 831-597-0792
BUILDBLOCK.COM

REINFORCEMENT OF OPENINGS

DATE/REV	11-17-09	SCALE	NTS	DETAIL SHEET
NOTES				30A

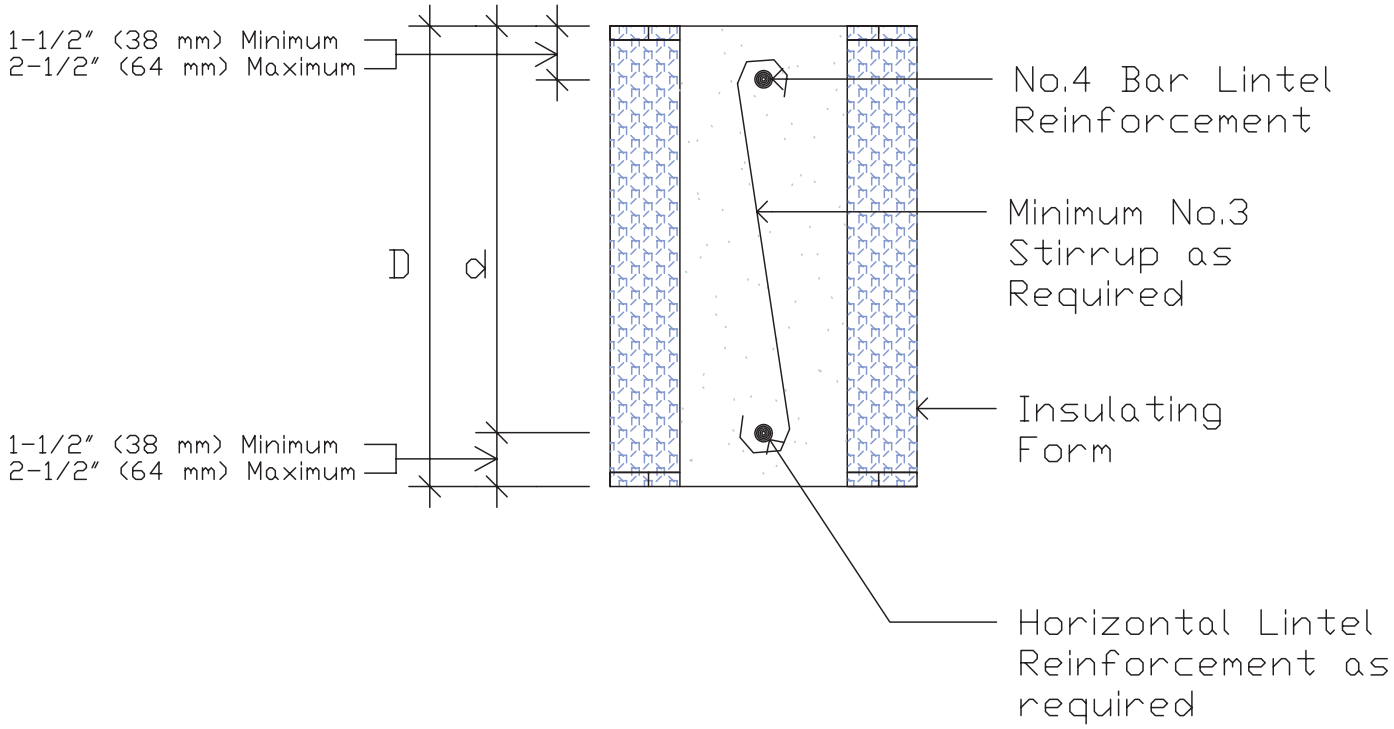

BuildBlock® BUILDING SYSTEMS

9705 N. BROADWAY EXTENSION, SUITE 200, OKLAHOMA CITY, OK 73114
OFFICE: 405-840-3386 | TOLL FREE: 866-222-2575 | FAX: 831-597-0792
BUILDBLOCK.COM

FLAT ICF LINTEL & STIRRUP CONSTRUCTION

DATE/REV	11-17-09	SCALE	NTS	DETAIL SHEET
NOTES				30B

CONSTRUCTION SHALL BE IN ACCORDANCE WITH ALL APPLICABLE LOCAL AND NATIONAL CODES. ALL DRAWINGS ARE SUBJECT TO CHANGE WITHOUT NOTICE.

UNLESS OTHER WISE SPECIFIED (2) #5 (#16-mm) REBAR SHALL BE PLACE AT ALL OPENINGS – JAMBS, SILL & HEAD (PERIMETER) – REFER TO DIAGRAM FOR ADDITIONAL CORNER REINFORCING REQUIREMENTS – ALL HORZ. SHALL EXTEND 12" MIN. PAST OPENING

BLOCK OUT WIDTH
R.O. PER WINDOW
MFGR'S SPEC.

4" 4"

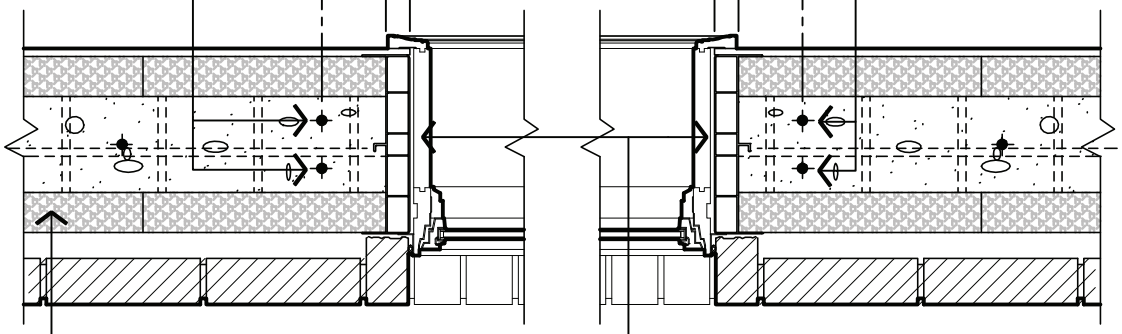

JAMB (TYP. WINDOW)

"BuildBlock"6" OR 8" I.C.F. UNITS "V-BUCK BLOCK OUT SYSTEM" AS MFGD' BY VINYL TECHNOLOGIES INC. – FOR ADDITIONAL INFORMATION REFER TO SEE OUR WEBSITE UNDER PRODUCTS – V-BUCK

2/31 HORIZONTAL SECTION
SCALE: 1" = 1'-0"

NOTE:
ALTHOUGH NOT RECOMMENDED WOOD BLOCK OUT MAY BE USED– ALL LUMBER SHALL BE TREATED– ATTACH W/ 6" CONCRETE SCREWS OR RING NECK GALVANIZED NAILS CAST EMBEDDED IN CORE @ (2) X 12" O.C. MINIMUM

FURNISH (2) #3 (#10-MM) REBAR @ 45° TIED TO VERTICAL & HORIZONTAL BARS @ EA. CORNER – 12" MIN.

PERIMETER "V-BUCK"– BRACE AS REQ'D

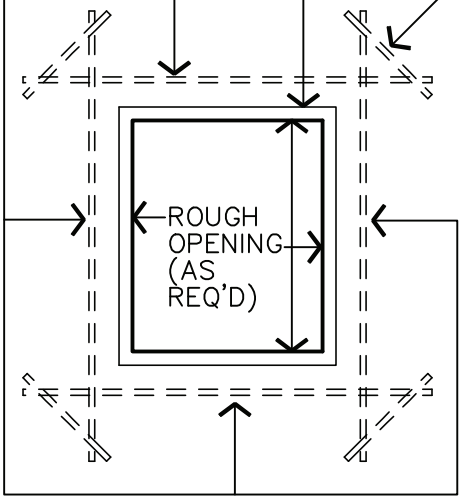

OPENING REINFORCING ELEVATION DIAGRAM
NO SCALE

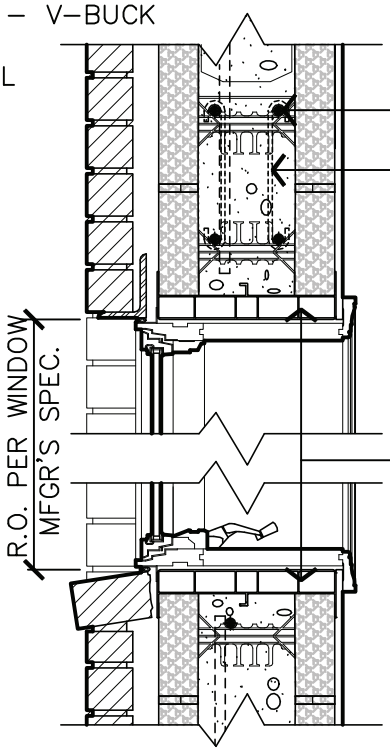

REFER TO LINTEL SCHEDULE IN INSTALLATION MANUAL FOR HEADER REINF'G REQUIREMENTS

HEAD (TYP. WINDOW)
DOOR HEAD. & OTHER FENESTRATION SIMILAR

"V-BUCK BLOCK OUT SYSTEM" AS MFGD' BY VINYL TECHNOLOGIES INC. – FOR ADDITIONAL INFORMATION SEE OUR WEBSITE UNDER PRODUCTS –V-BUCK

1/31 VERTICAL SECTION
SCALE: 1" = 1'-0"

SILL (TYP. WINDOW)
ACCESS, VENT & OTHER FENESTRATION SIMILAR

NOTE:
DUE TO VARIATIONS IN SELECTED PRINTER SETTINGS, NOTED SCALES MAY NO LONGER BE APPLICABLE

BuildBlock® BUILDING SYSTEMS

9705 N. BROADWAY EXTENSION, SUITE 200, OKLAHOMA CITY, OK 73114
OFFICE: 405-840-3386 | TOLL FREE: 866-222-2575 | FAX: 831-597-0792
BUILDBLOCK.COM

WINDOW OPENINGS

DATE/REV	11-28-06 /2	SCALE	NTS	DETAIL SHEET
NOTES				31

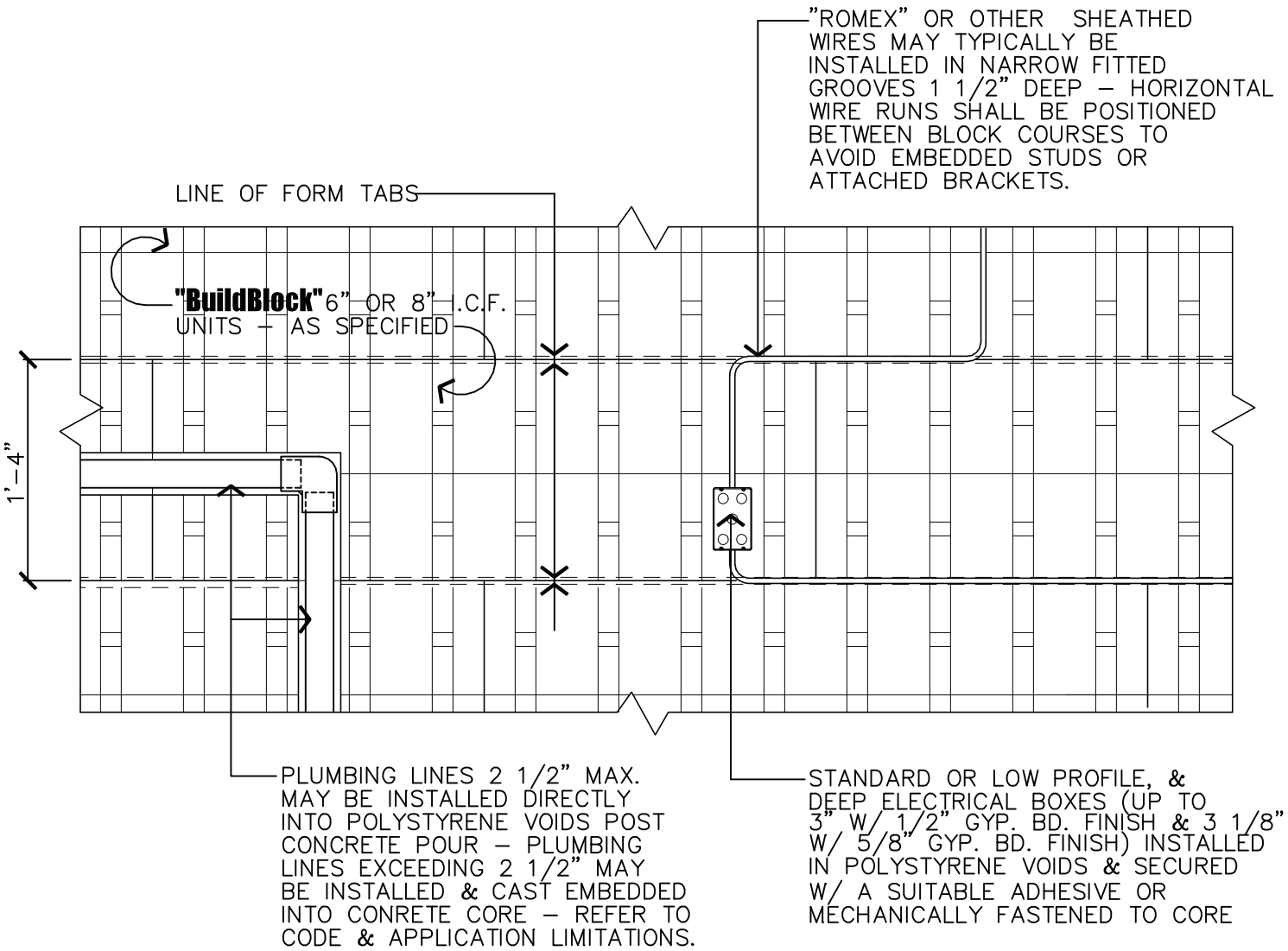

GENERAL DETAIL NOTES:

1. ALL PLUMBING, CONDUIT, AND SHEATHED WIRE ROUTES SHOULD BE PRE–MARKED AND CUT WITH ROUTER, HOT KNIFE OR ELECTRIC SOLDERING GUN.
2. INSTALLATION OF 1" OR LESS ARE PREFERED TO BE PLACED IN THE 1" AREA OF HORIZONTAL COURSING WHICH CONTAINS NO TABS. AVOID CUTTING TABS AND WEBBING AT ALL POSSIBLE CIRCUMSTANCES.

1/32 ELEVATION
SCALE: 1" = 1'–0"

NOTE:
DUE TO VARIATIONS IN SELECTED PRINTER SETTINGS, NOTED SCALES MAY NO LONGER BE APPLICABLE

BuildBlock BUILDING SYSTEMS

9705 N. BROADWAY EXTENSION, SUITE 200, OKLAHOMA CITY, OK 73114
OFFICE: 405-840-3386 | TOLL FREE: 866-222-2575 | FAX: 831-597-0792
BUILDBLOCK.COM

MECHANICAL INSTALLATIONS

DATE/REV	12-01-04 /1	SCALE	NTS	DETAIL SHEET
NOTES				32

*ADDITIONAL INFORMATION AND PRODUCT SPECIFICATIONS AT BUILDBLOCK.COM

THE WATERPROOFING SYSTEM CONSISTS OF A PEEL AND STICK MEMBRANE ADHERED DIRECTLY TO THE ICF AND A DIMPLE MEMBRANE TO PROTECT WATERPROOFING FROM BACKFILL, PROVIDE A DRAINAGE PLANE AND AN AIR GAP TO RELIEVE HYDROSTATIC SOIL PRESSURE.

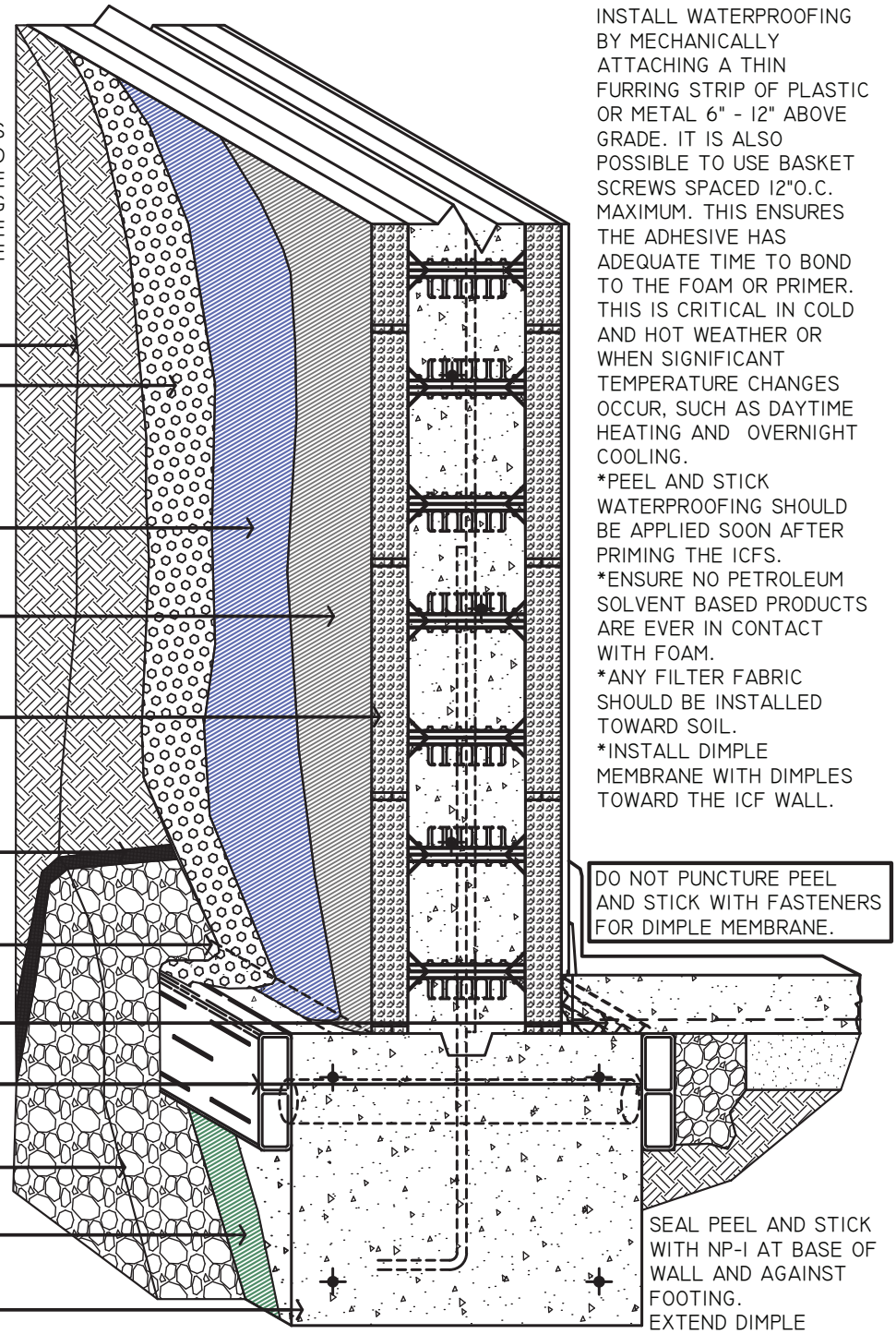

INSTALL WATERPROOFING BY MECHANICALLY ATTACHING A THIN FURRING STRIP OF PLASTIC OR METAL 6" - 12" ABOVE GRADE. IT IS ALSO POSSIBLE TO USE BASKET SCREWS SPACED 12"O.C. MAXIMUM. THIS ENSURES THE ADHESIVE HAS ADEQUATE TIME TO BOND TO THE FOAM OR PRIMER. THIS IS CRITICAL IN COLD AND HOT WEATHER OR WHEN SIGNIFICANT TEMPERATURE CHANGES OCCUR, SUCH AS DAYTIME HEATING AND OVERNIGHT COOLING.
*PEEL AND STICK WATERPROOFING SHOULD BE APPLIED SOON AFTER PRIMING THE ICFS.
*ENSURE NO PETROLEUM SOLVENT BASED PRODUCTS ARE EVER IN CONTACT WITH FOAM.
*ANY FILTER FABRIC SHOULD BE INSTALLED TOWARD SOIL.
*INSTALL DIMPLE MEMBRANE WITH DIMPLES TOWARD THE ICF WALL.

SEAL PEEL AND STICK WITH NP-1 AT BASE OF WALL AND AGAINST FOOTING.
EXTEND DIMPLE MEMBRANE PAST EDGE OF FOOTING AND OVER FOUNDATION DRAIN TO SHED WATER INTO DRAIN SYSTEM.

1/33 ISOMETRIC CUT-AWAY
SCALE: NTS

GENERAL DETAIL NOTES:

1. ALTERNATE WATERPROOFING PRODUCTS WITH EQUAL OR GREATER SPECIFICATIONS MAY BE USED.
2. FOLLOW ALL MANUFACTURER'S INSTALLATION DETAILS AND SPECIFICATIONS.

BuildBlock BUILDING SYSTEMS

9705 N. BROADWAY EXTENSION, SUITE 200, OKLAHOMA CITY, OK 73114
OFFICE: 405-840-3386 | TOLL FREE: 866-222-2575 | FAX: 831-597-0792
BUILDBLOCK.COM

SUB-GRADE WATERPROOFING

DATE/REV	7-27-16 /3	SCALE	NTS	DETAIL SHEET
NOTES				33

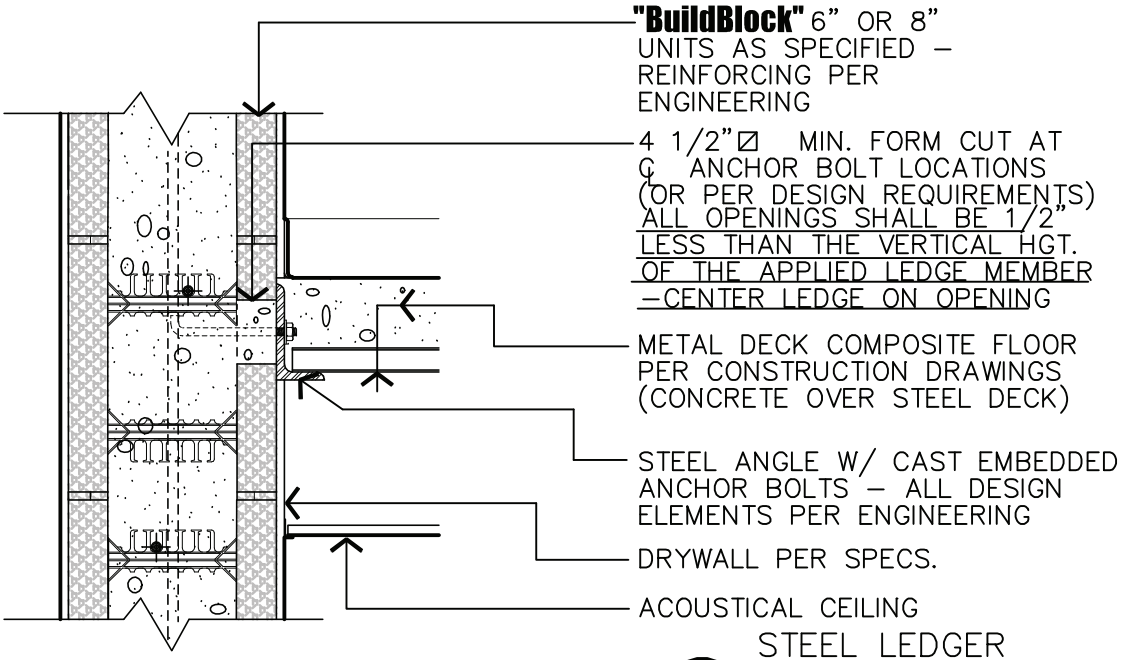

2/34 STEEL LEDGER SECTION DETAIL
SCALE: 1" = 1'–0"

NOTE:
VARIATIONS IN IMPOSOSED LIVE & DEAD LOADS AND OTHER APPLICATION SPECIFIC VARIABLE REQUIRE ALL ASPECTS OF THE DETAILS SHOWN HERE TO BE DESIGNED AND /OR APPROVED BY A QUALIFIED ENGINEER

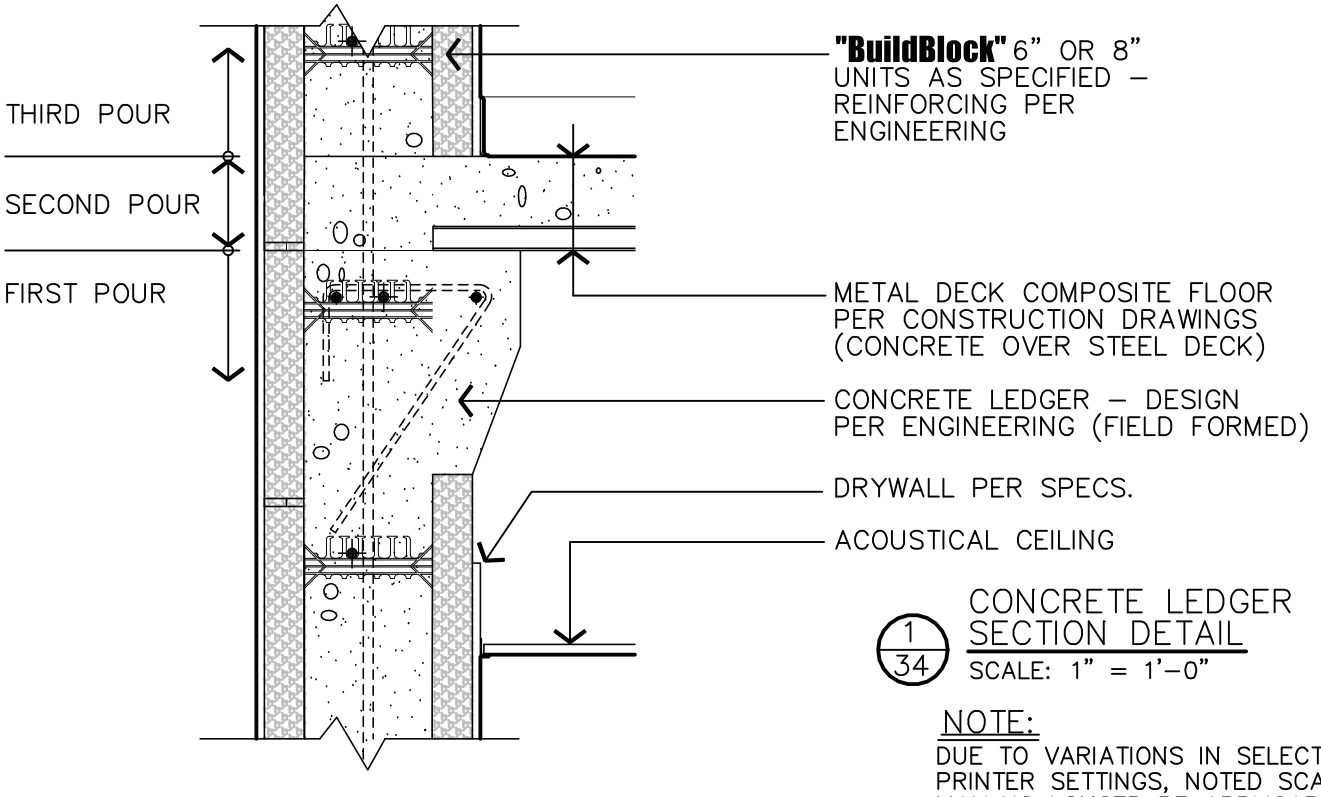

1/34 CONCRETE LEDGER SECTION DETAIL
SCALE: 1" = 1'–0"

NOTE:
DUE TO VARIATIONS IN SELECTED PRINTER SETTINGS, NOTED SCALES MAY NO LONGER BE APPLICABLE

BuildBlock BUILDING SYSTEMS

METAL DECK COMPOSITE FLOORS

DATE/REV	12-01-04 /1	SCALE	NTS	DETAIL SHEET
NOTES				34

9705 N. BROADWAY EXTENSION, SUITE 200, OKLAHOMA CITY, OK 73114
OFFICE: 405-840-3386 | TOLL FREE: 866-222-2575 | FAX: 831-597-0792
BUILDBLOCK.COM

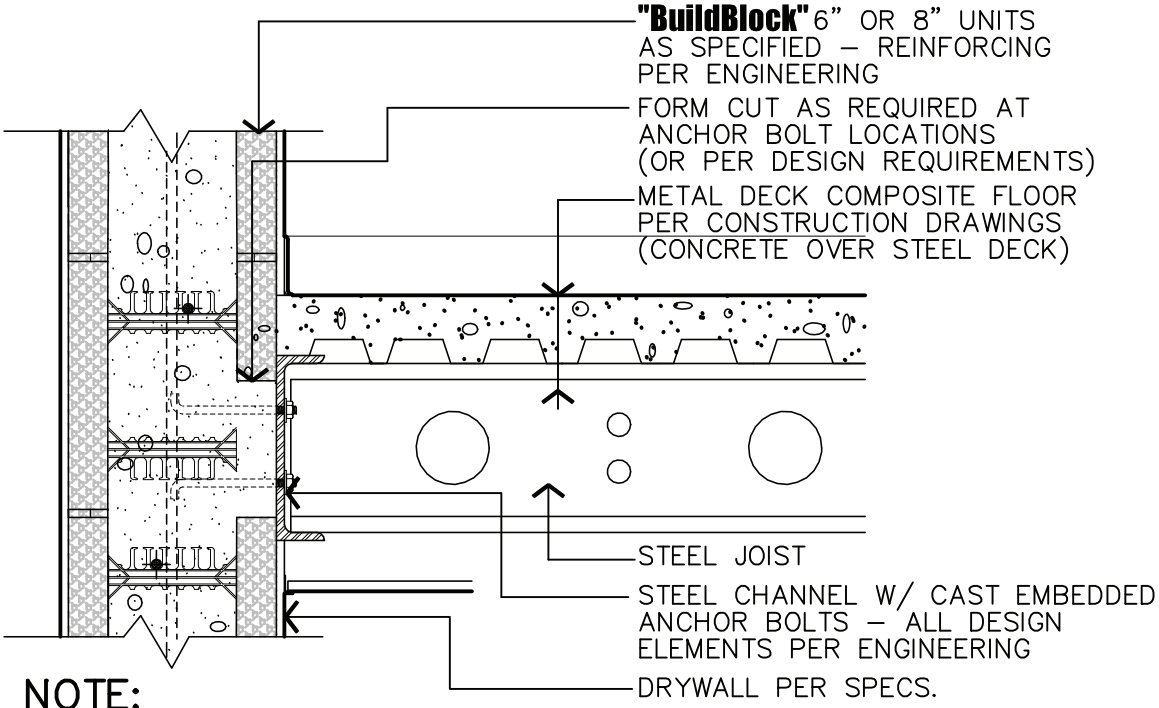

NOTE:

VARIATIONS IN IMPOSOSED LIVE & DEAD LOADS AND OTHER APPLICATION SPECIFIC VARIABLE REQUIRE ALL ASPECTS OF THE DETAILS SHOWN HERE TO BE DESIGNED AND /OR APPROVED BY A QUALIFIED ENGINEER

2/35 STEEL JOIST SECTION DETAIL
SCALE: 1" = 1'–0"

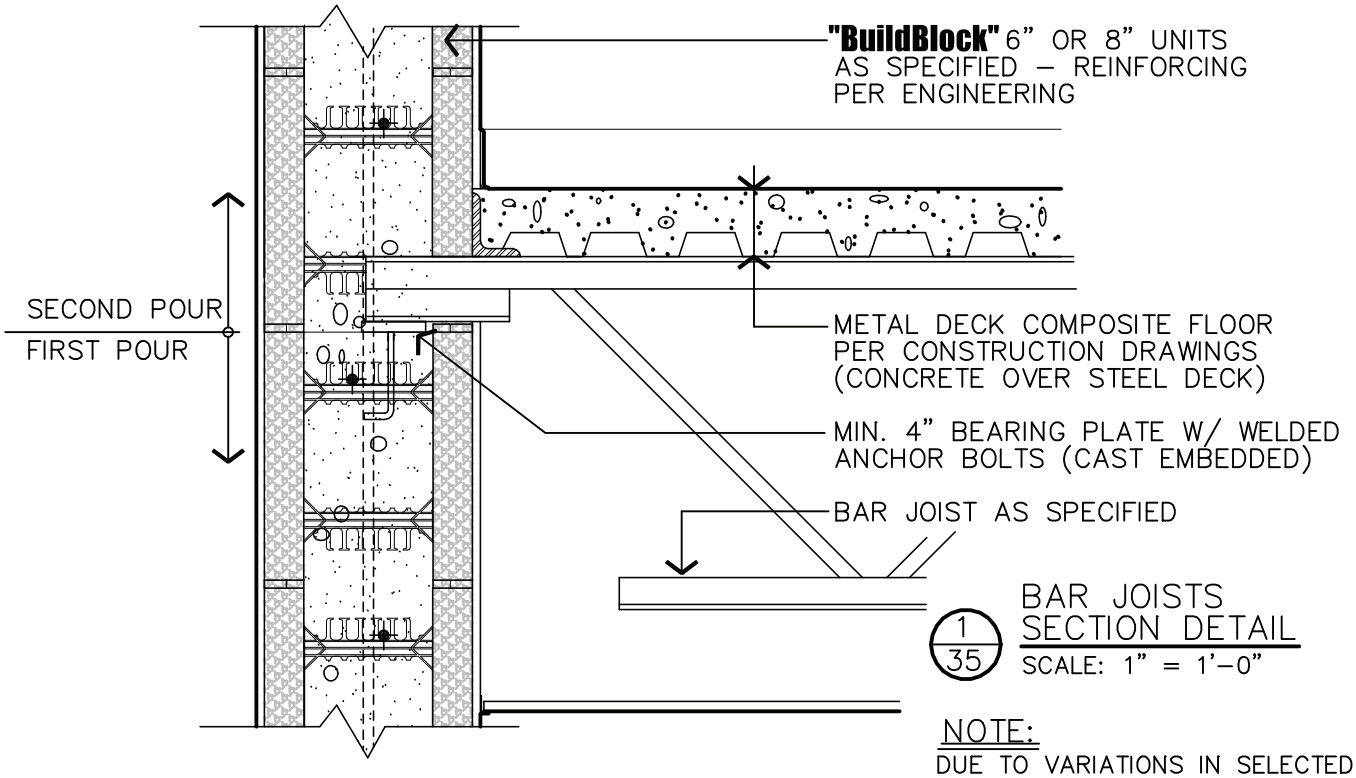

1/35 BAR JOISTS SECTION DETAIL
SCALE: 1" = 1'–0"

NOTE:

DUE TO VARIATIONS IN SELECTED PRINTER SETTINGS, NOTED SCALES MAY NO LONGER BE APPLICABLE

BuildBlock BUILDING SYSTEMS

9705 N. BROADWAY EXTENSION, SUITE 200, OKLAHOMA CITY, OK 73114
OFFICE: 405-840-3386 | TOLL FREE: 866-222-2575 | FAX: 831-597-0792
BUILDBLOCK.COM

METAL DECK & STEEL JOISTS

DATE/REV	12-01-04 /1	SCALE	NTS	DETAIL SHEET
NOTES				35

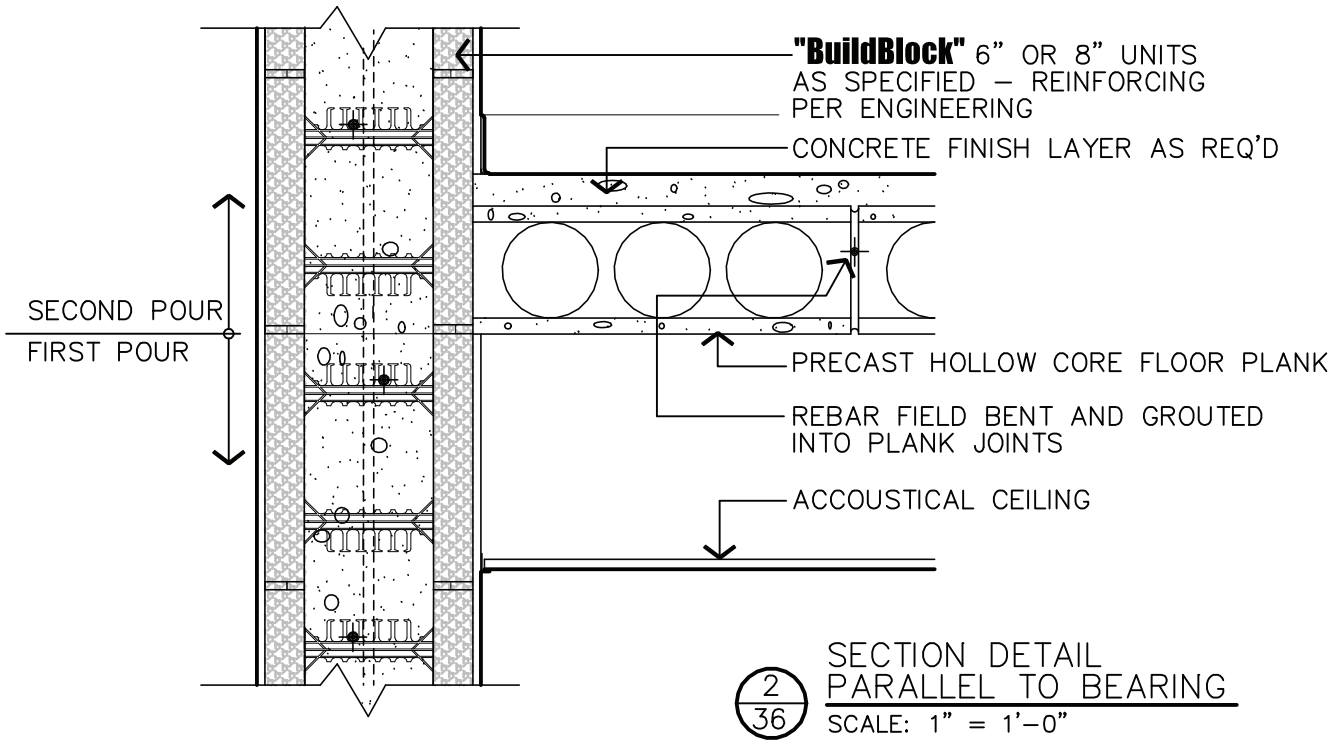

2/36 SECTION DETAIL
PARALLEL TO BEARING
SCALE: 1" = 1'–0"

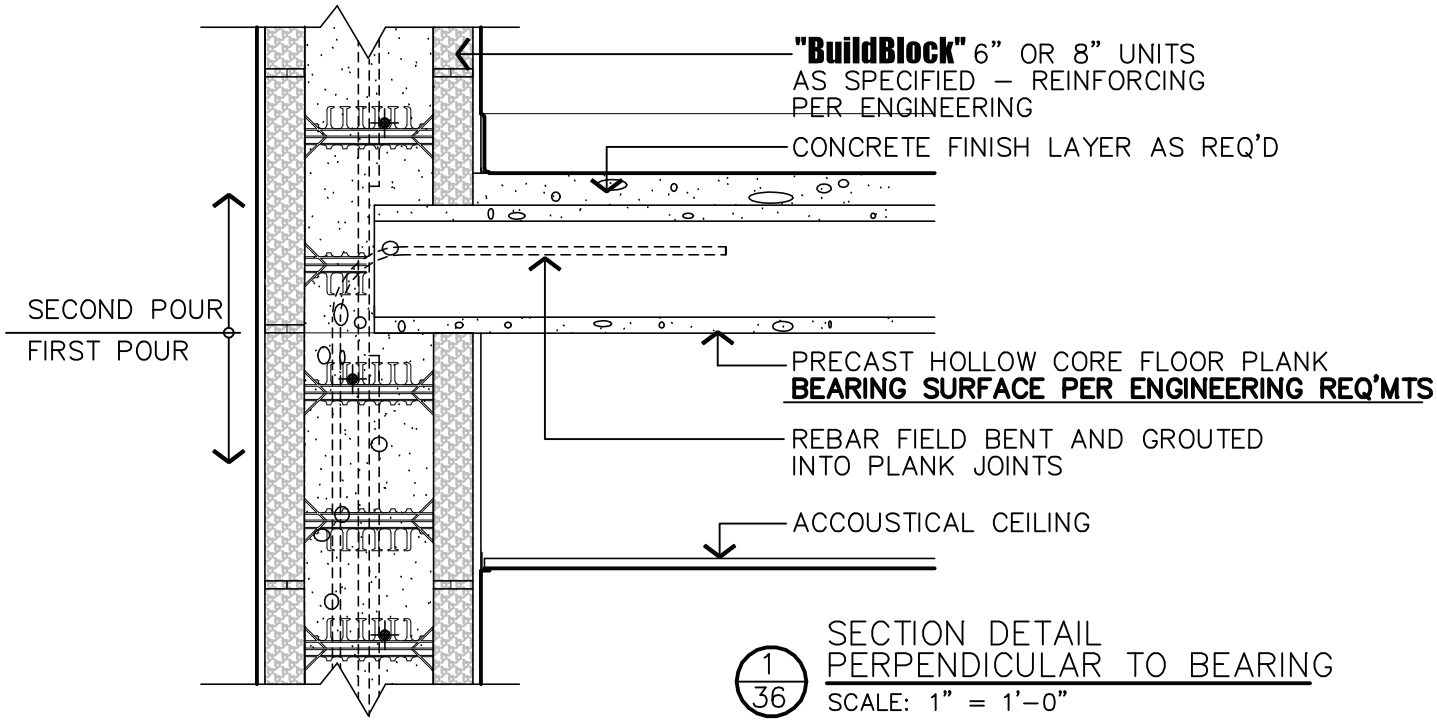

1/36 SECTION DETAIL
PERPENDICULAR TO BEARING
SCALE: 1" = 1'–0"

NOTE:
DUE TO VARIATIONS IN SELECTED PRINTER SETTINGS, NOTED SCALES MAY NO LONGER BE APPLICABLE

BuildBlock BUILDING SYSTEMS

9705 N. BROADWAY EXTENSION, SUITE 200, OKLAHOMA CITY, OK 73114
OFFICE: 405-840-3386 | TOLL FREE: 866-222-2575 | FAX: 831-597-0792
BUILDBLOCK.COM

PRECAST HOLLOW CORE FLOORS

DATE/REV	12-01-04 /1	SCALE	NTS	DETAIL SHEET
NOTES				36

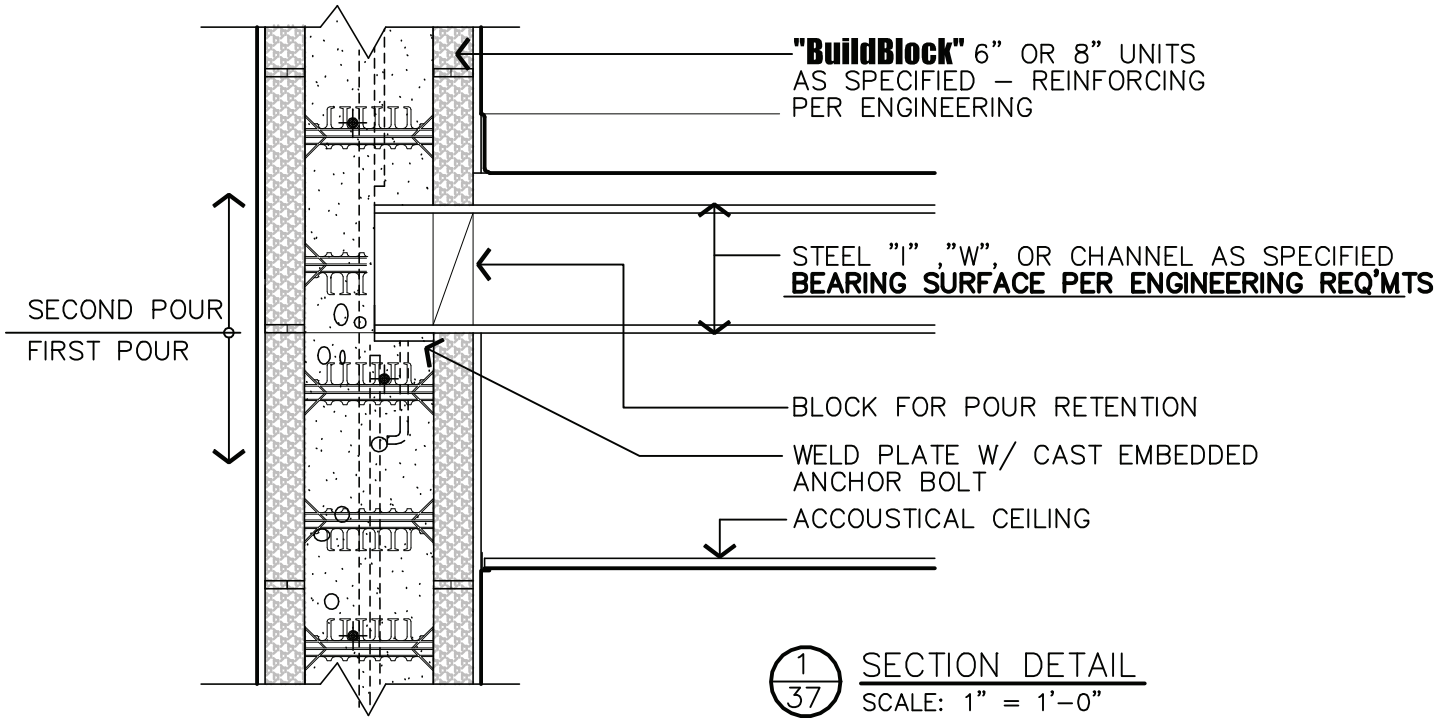

NOTE:
DUE TO VARIATIONS IN SELECTED PRINTER SETTINGS, NOTED SCALES MAY NO LONGER BE APPLICABLE

BuildBlock® BUILDING SYSTEMS

9705 N. BROADWAY EXTENSION, SUITE 200, OKLAHOMA CITY, OK 73114
OFFICE: 405-840-3386 | TOLL FREE: 866-222-2575 | FAX: 831-597-0792
BUILDBLOCK.COM

BEAM POCKET

DATE/REV	12-21-01 /1	SCALE	NTS	DETAIL SHEET
NOTES				37

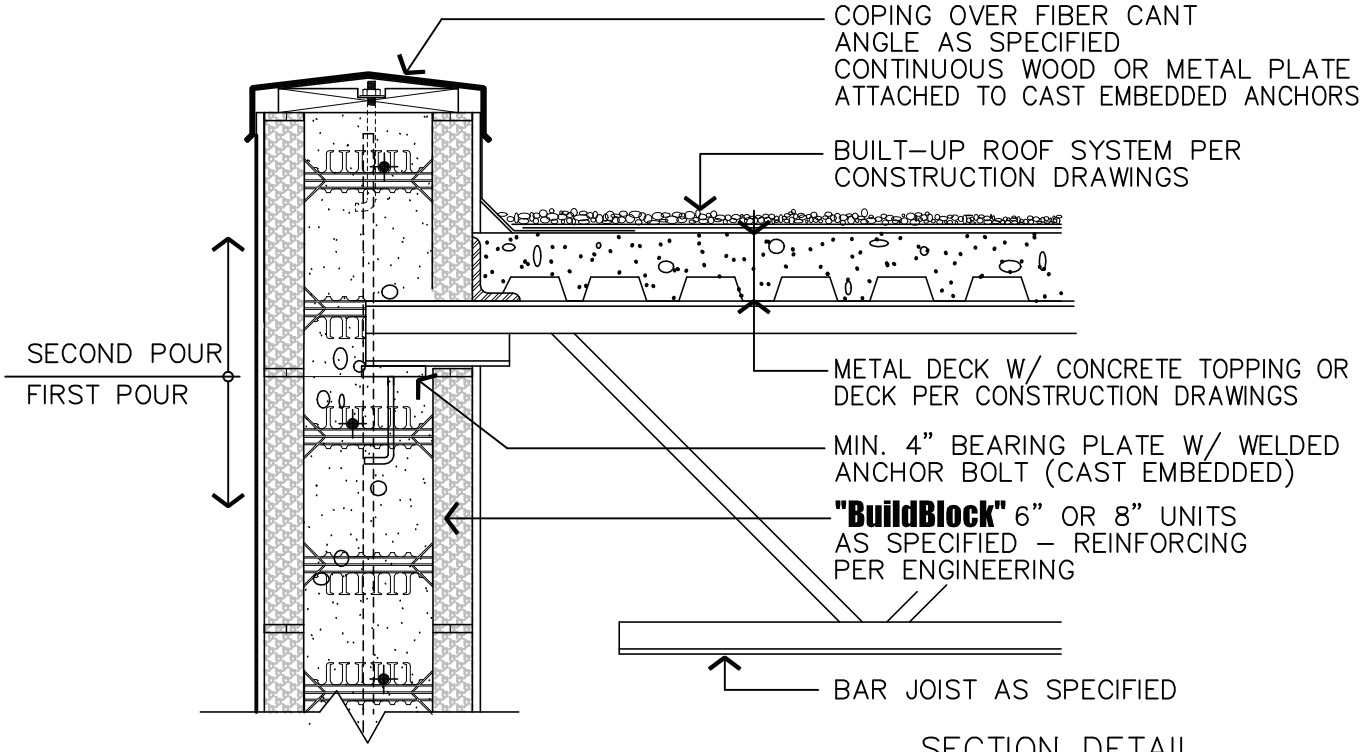

2/38 SECTION DETAIL "BUILD BLOCK" PARAPET
SCALE: 1" = 1'–0"

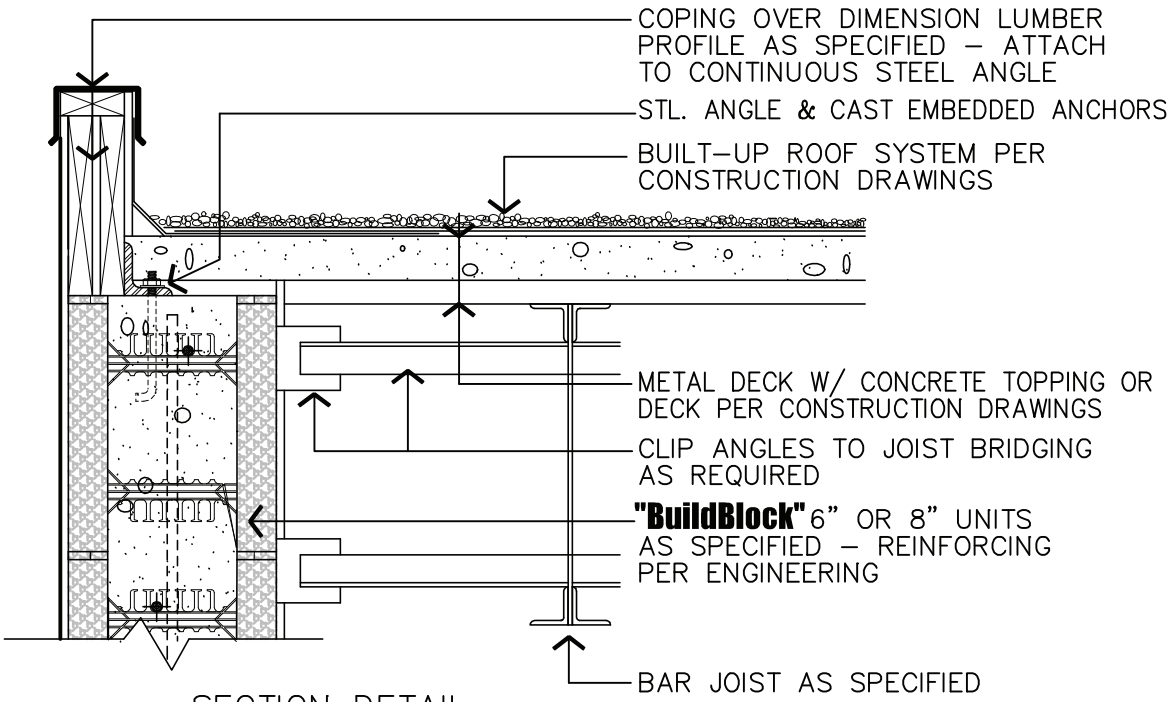

1/38 SECTION DETAIL WOOD PARAPET
SCALE: 1" = 1'–0"

NOTE:
DUE TO VARIATIONS IN SELECTED PRINTER SETTINGS, NOTED SCALES MAY NO LONGER BE APPLICABLE

BuildBlock® BUILDING SYSTEMS

9705 N. BROADWAY EXTENSION, SUITE 200, OKLAHOMA CITY, OK 73114
OFFICE: 405-840-3386 | TOLL FREE: 866-222-2575 | FAX: 831-597-0792
BUILDBLOCK.COM

PARAPETS

DATE/REV	12-01-04 /1	SCALE	NTS	DETAIL SHEET
NOTES				38

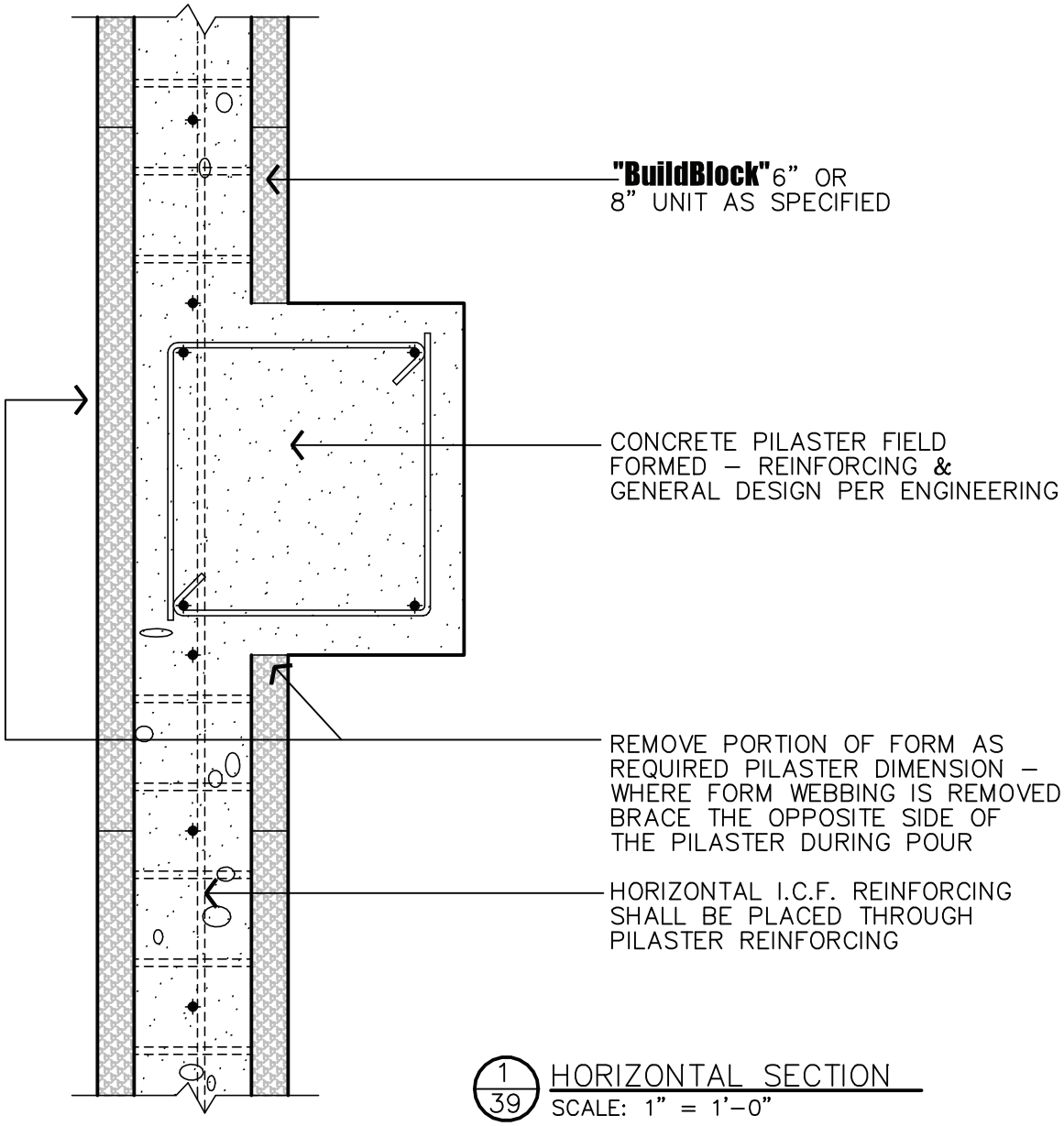

1/39 HORIZONTAL SECTION
SCALE: 1" = 1'–0"

NOTE:
DUE TO VARIATIONS IN SELECTED PRINTER SETTINGS, NOTED SCALES MAY NO LONGER BE APPLICABLE

BuildBlock® BUILDING SYSTEMS

9705 N. BROADWAY EXTENSION, SUITE 200, OKLAHOMA CITY, OK 73114
OFFICE: 405-840-3386 | TOLL FREE: 866-222-2575 | FAX: 831-597-0792
BUILDBLOCK.COM

PILASTER DETAIL

DATE/REV	12-01-04 /1	SCALE	NTS	DETAIL SHEET
NOTES				39

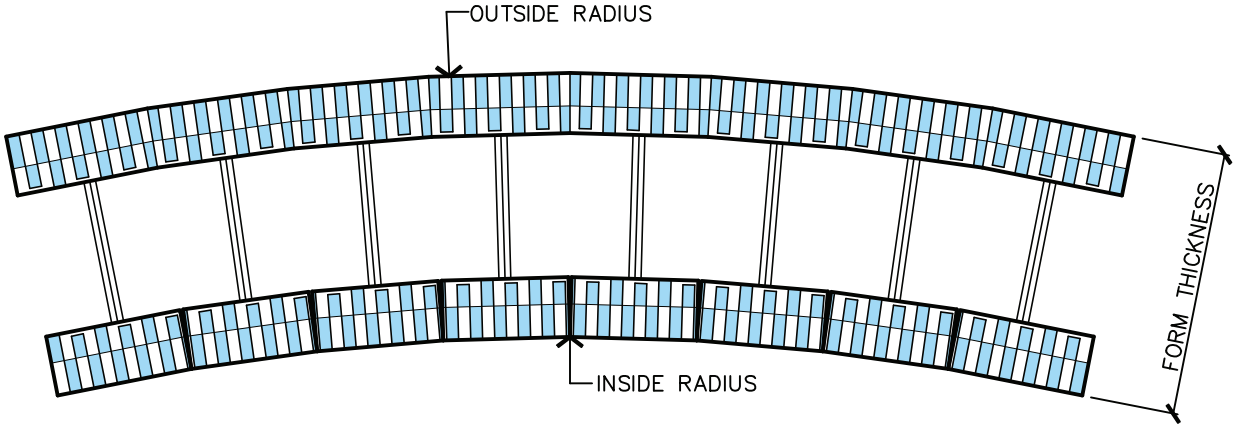

2/40 FORM CURVED
SCALE: 1 1/2" = 1'–0"

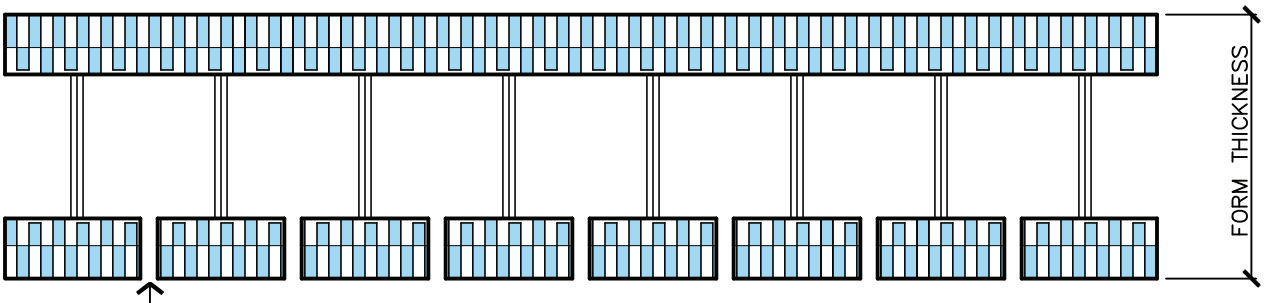

1/40 FORM STRAIGHT
SCALE: 1 1/2" = 1'–0"

WALL INSIDE RADIUS	SLOTS SPACED AT 6" O.C.			
	4" STRAIGHT FORM (FUTURE)	6" STRAIGHT FORM	8" STRAIGHT FORM	10" STRAIGHT FORM (FUTURE)
2 FEET	1 1/2"	1 3/4"	2"	2 3/16"
3 FEET	1 1/16"	1 5/16"	1 1/2"	1 11/16"
4 FEET	13/16"	1"	1 3/16"	1 5/16
5 FEET	11/16"	13/16"	1"	1 1/8"
6 FEET	9/16"	11/16"	13/16"	15/16"
7 FEET	1/2"	5/8"	3/4"	7/8"
8 FEET	7/16"	9/16"	5/8"	3/4"
9 FEET	3/8"	1/2"	9/16"	11/16"
10 FEET	3/8"	7/16"	9/16"	5/8"
15 FEET	1/4"	5/16"	3/8"	7/16"
20 FEET	3/16"	1/4"	1/4"	5/16"
25 FEET	1/8"	3/16"	1/4"	1/4"
30 FEET	1/8"	3/16"	3/16"	1/4"
40 FEET	1/8"	1/8"	1/8"	3/16"
50 FEET	1/16"	1/8"	1/8"	1/8"
60 FEET	1/16"	1/16"	1/8"	1/8"
70 FEET	1/16"	1/16"	1/16"	1/8"
80 FEET	1/16"	1/16"	1/16"	1/16"
90 FEET	1/16"	1/16"	1/16"	1/16"
100 FEET	1/16"	1/16"	1/16"	1/16"

WALL INSIDE RADIUS	SLOTS SPACED AT 12" O.C.			
	4" STRAIGHT FORM (FUTURE)	6" STRAIGHT FORM	8" STRAIGHT FORM	10" STRAIGHT FORM (FUTURE)
2 FEET	3"	3 1/2"	4"	4 3/8"
3 FEET	2 3/16"	2 9/16"	3"	3 5/16"
4 FEET	1 11/16"	2 1/16"	2 3/8"	2 11/16"
5 FEET	1 3/8"	1 11/16"	2"	2 1/4"
6 FEET	1 3/16"	1 7/16"	1 11/16"	1 15/16"
7 FEET	1"	1 1/4"	1 1/2"	1 11/16"
8 FEET	7/8"	1 1/8"	1 5/16"	1 1/2"
9 FEET	13/16"	1"	1 3/16"	1 3/8"
10 FEET	3/4"	7/8"	1 1/16"	1 1/4"
15 FEET	1/2"	5/8"	3/4"	7/8"
20 FEET	3/8"	1/2"	9/16"	5/8"
25 FEET	5/16"	3/8"	7/16"	1/2"
30 FEET	1/4"	5/16"	3/8"	7/16"
40 FEET	3/16"	1/4"	5/16"	5/16"
50 FEET	1/8"	3/16"	1/4"	1/4"
60 FEET	1/8"	3/16"	3/16"	1/4"
70 FEET	1/8"	1/8"	3/16"	3/16"
80 FEET	1/8"	1/8"	1/8"	3/16"
90 FEET	1/16"	1/8"	1/8"	1/8"
100 FEET	1/16"	1/8"	1/8"	1/8"

Please refer to Section 5.7 in the BuildBlock Installation & Technical Manual for additional form and radius sizes.

NOTE:
DUE TO VARIATIONS IN SELECTED PRINTER SETTINGS, NOTED SCALES MAY NO LONGER BE APPLICABLE

BuildBlock® BUILDING SYSTEMS

BUILDBLOCK RADIUS WALLS

DATE/REV	12-01-04 /1	SCALE	NTS	DETAIL SHEET
NOTES				40

9705 N. BROADWAY EXTENSION, SUITE 200, OKLAHOMA CITY, OK 73114
OFFICE: 405-840-3386 | TOLL FREE: 866-222-2575 | FAX: 831-597-0792
BUILDBLOCK.COM

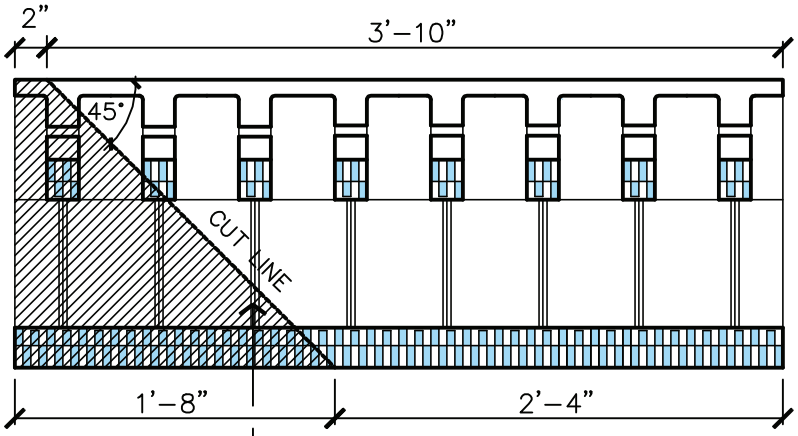

CUTTING NOTES:

BY FOLLOWING THE PRESCRIBED CUT DIMENSIONS (2) LEDGE BLOCKS WILL YIELD (1 90° CORNER ASSEMBLY WITH MINIMAL WASTE.

DISCARD THIS PORTION

3/41 CUTTING DIAGRAM (TOP VIEW FULL BLOCK)
SCALE: 1" = 1'–0"

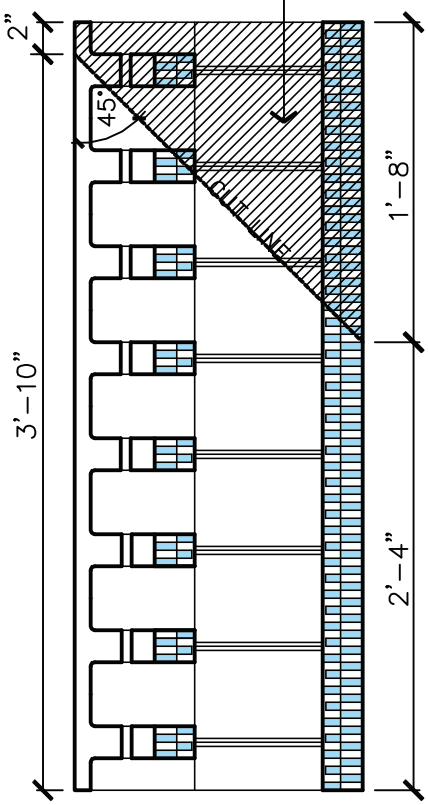

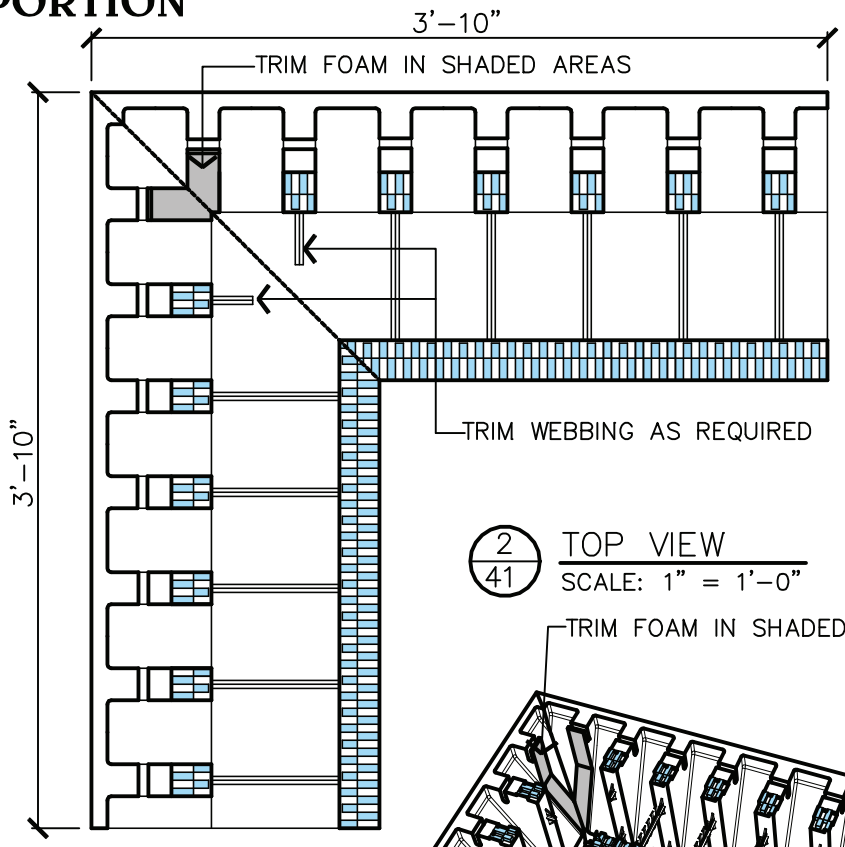

2/41 TOP VIEW
SCALE: 1" = 1'–0"

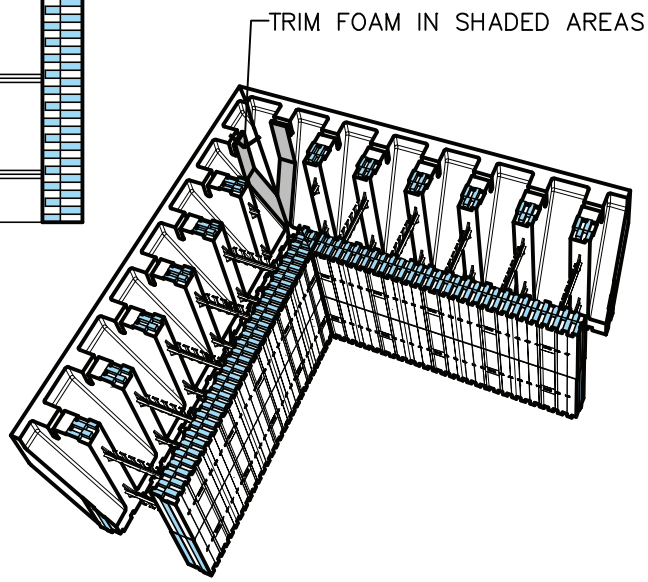

1/41 PERSPECTIVE VIEW
NO SCALE

NOTE:

DUE TO VARIATIONS IN SELECTED PRINTER SETTINGS, NOTED SCALES MAY NO LONGER BE APPLICABLE

BuildBlock® BUILDING SYSTEMS

8" LEDGEBLOCK OUTSIDE 90° MITER NO. 1

DATE/REV	03-15-06 /1	SCALE	NTS	DETAIL SHEET
NOTES				41

9705 N. BROADWAY EXTENSION, SUITE 200, OKLAHOMA CITY, OK 73114
OFFICE: 405-840-3386 | TOLL FREE: 866-222-2575 | FAX: 831-597-0792
BUILDBLOCK.COM

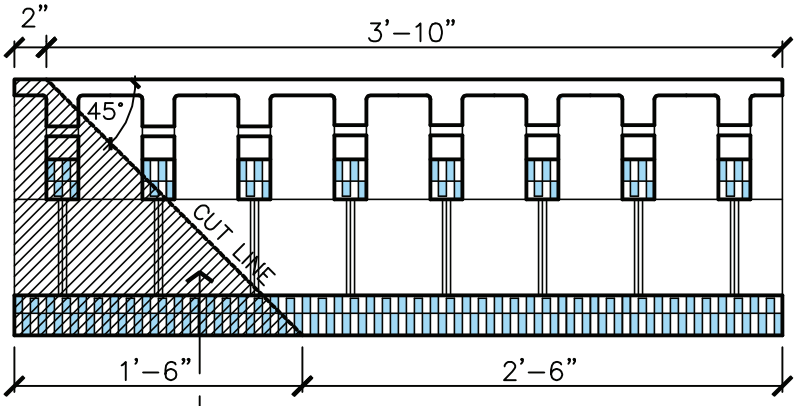

CUTTING NOTES:

BY FOLLOWING THE PRESCRIBED CUT DIMENSIONS (2) LEDGE BLOCKS WILL YIELD (1 90° CORNER ASSEMBLY WITH MINIMAL WASTE.

DISCARD THIS PORTION

3 / 41a CUTTING DIAGRAM (TOP VIEW FULL BLOCK)
SCALE: 1" = 1'–0"

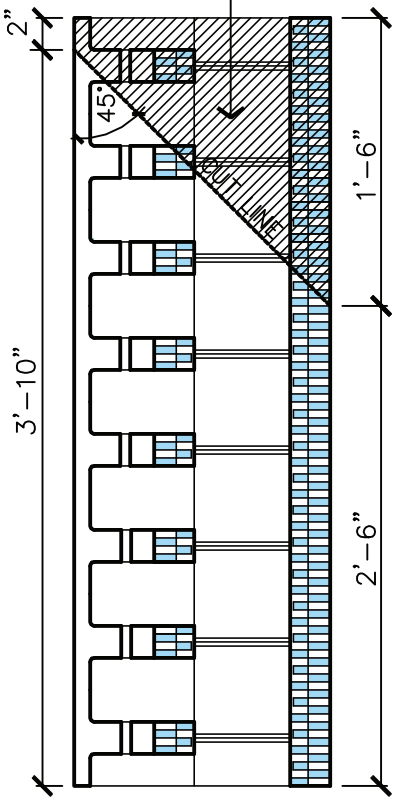

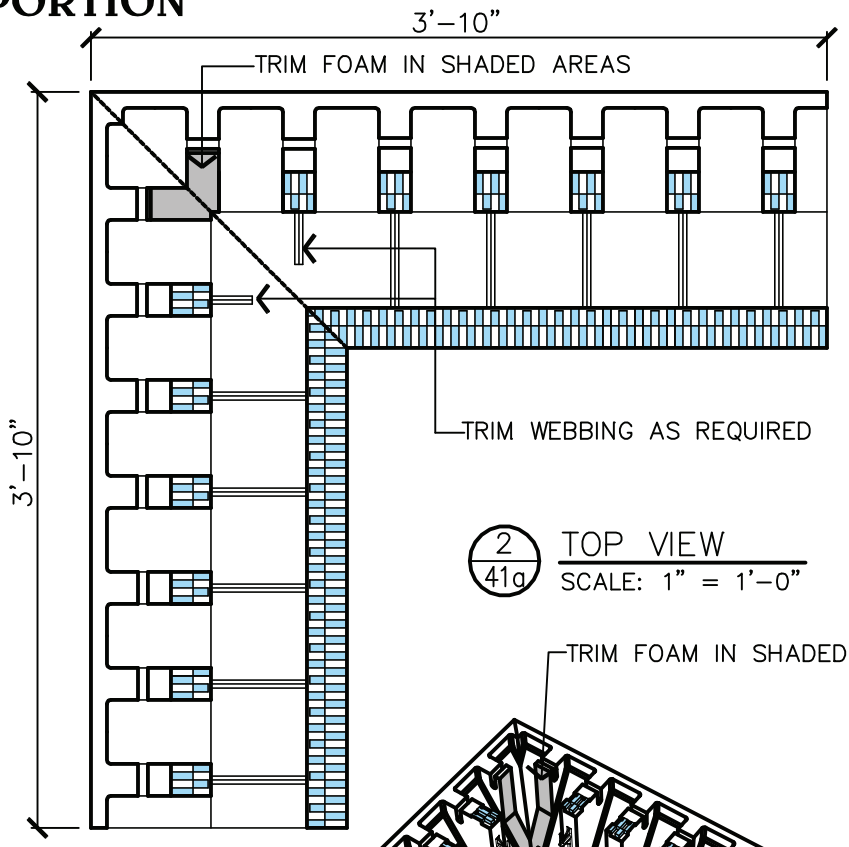

2 / 41a TOP VIEW
SCALE: 1" = 1'–0"

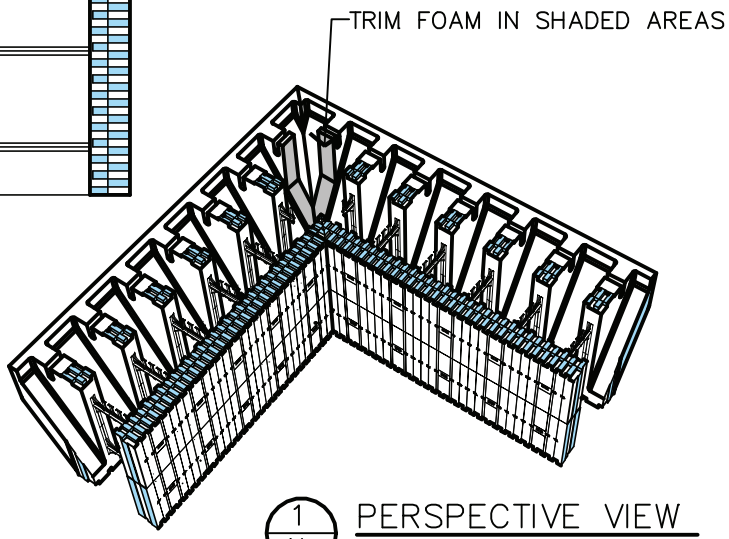

1 / 41a PERSPECTIVE VIEW
NO SCALE

NOTE:

DUE TO VARIATIONS IN SELECTED PRINTER SETTINGS, NOTED SCALES MAY NO LONGER BE APPLICABLE

BuildBlock® BUILDING SYSTEMS

9705 N. BROADWAY EXTENSION, SUITE 200, OKLAHOMA CITY, OK 73114
OFFICE: 405-840-3386 | TOLL FREE: 866-222-2575 | FAX: 831-597-0792
BUILDBLOCK.COM

6" LEDGEBLOCK OUTSIDE 90° MITER NO. 1

DATE/REV	02-09-06 /1	SCALE	NTS	DETAIL SHEET
NOTES				41A

CONSTRUCTION SHALL BE IN ACCORDANCE WITH ALL APPLICABLE LOCAL AND NATIONAL CODES. ALL DRAWINGS ARE SUBJECT TO CHANGE WITHOUT NOTICE.

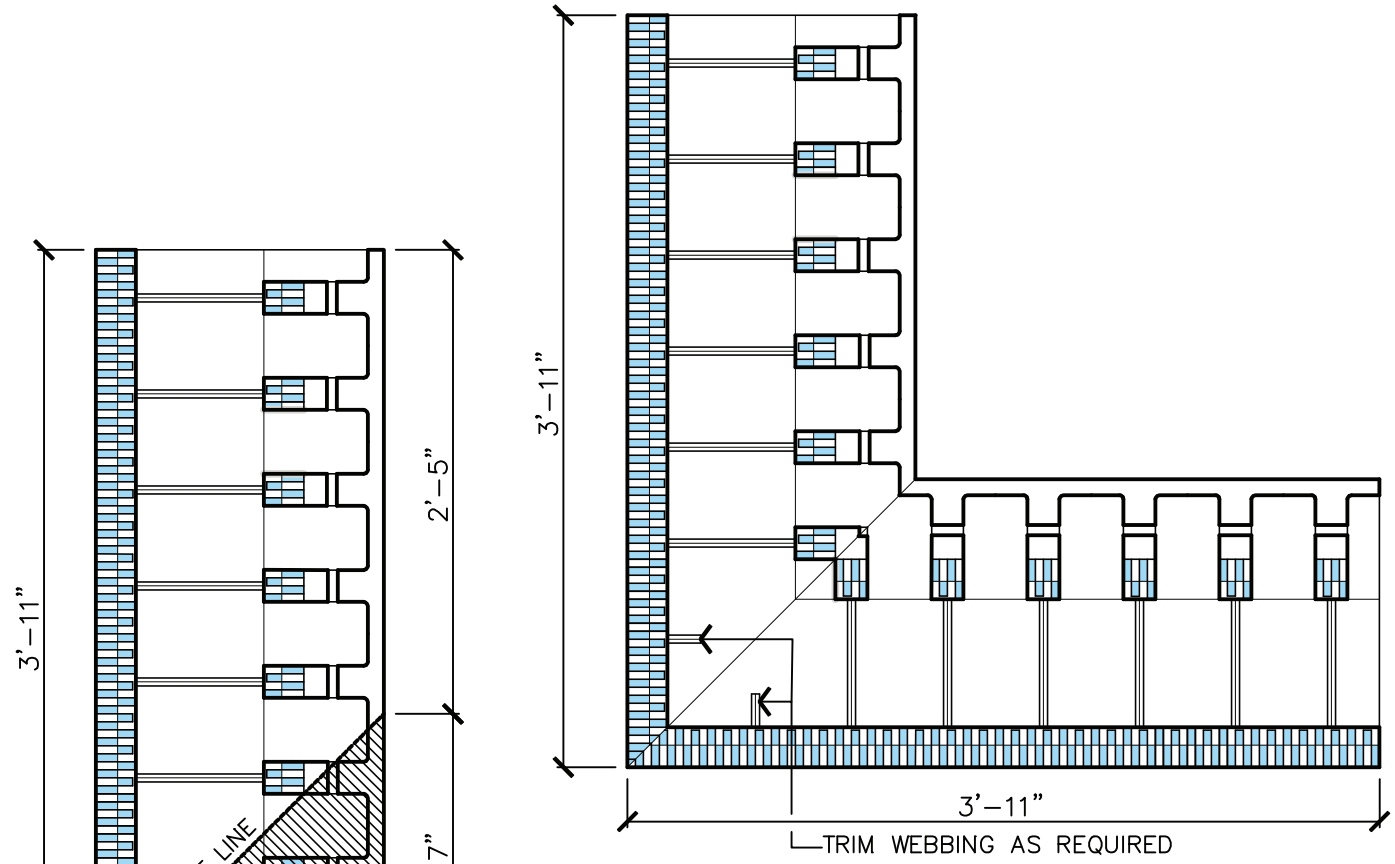

2/42 TOP VIEW
SCALE: 1 1/2" = 1'–0"

DISCARD THIS PORTION

CUTTING NOTES:

A. BY FOLLOWING THE PRESCRIBED CUT DIMENSIONS (2) LEDGE BLOCKS WILL YIELD (1 90° CORNER ASSEMBLY WITH MINIMAL WASTE.

B. WHEN STACKING 6" BLOCKS ABOVE ON INSIDE MITER REMOVE 2" OF EACH LEFT & RIGHT BLOCKS RESPECTIVELY FOR WEB ALIGNMENT.

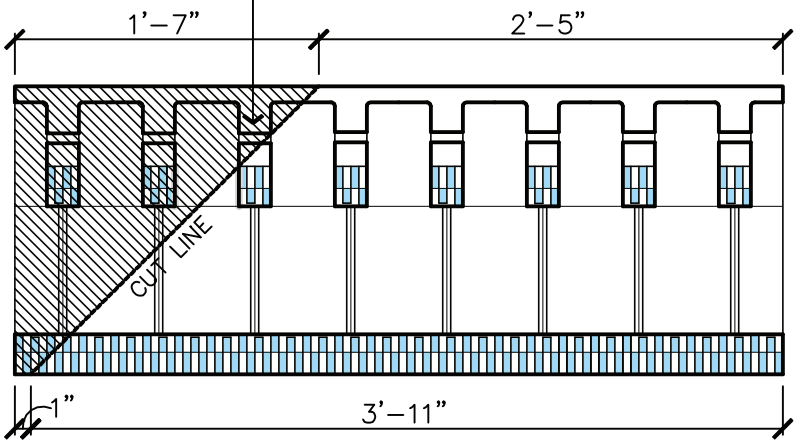

1/42 CUTTING DIAGRAM (TOP VIEW FULL BLOCK)
SCALE: 1" = 1'–0"

NOTE:
DUE TO VARIATIONS IN SELECTED PRINTER SETTINGS, NOTED SCALES MAY NO LONGER BE APPLICABLE

BuildBlock BUILDING SYSTEMS

9705 N. BROADWAY EXTENSION, SUITE 200, OKLAHOMA CITY, OK 73114
OFFICE: 405-840-3386 | TOLL FREE: 866-222-2575 | FAX: 831-597-0792
BUILDBLOCK.COM

LEDGEBLOCK INSIDE 90° MITER NO. 1

DATE/REV	12-01-04 /1	SCALE	NTS	DETAIL SHEET
NOTES				42

CONSTRUCTION SHALL BE IN ACCORDANCE WITH ALL APPLICABLE LOCAL AND NATIONAL CODES. ALL DRAWINGS ARE SUBJECT TO CHANGE WITHOUT NOTICE.

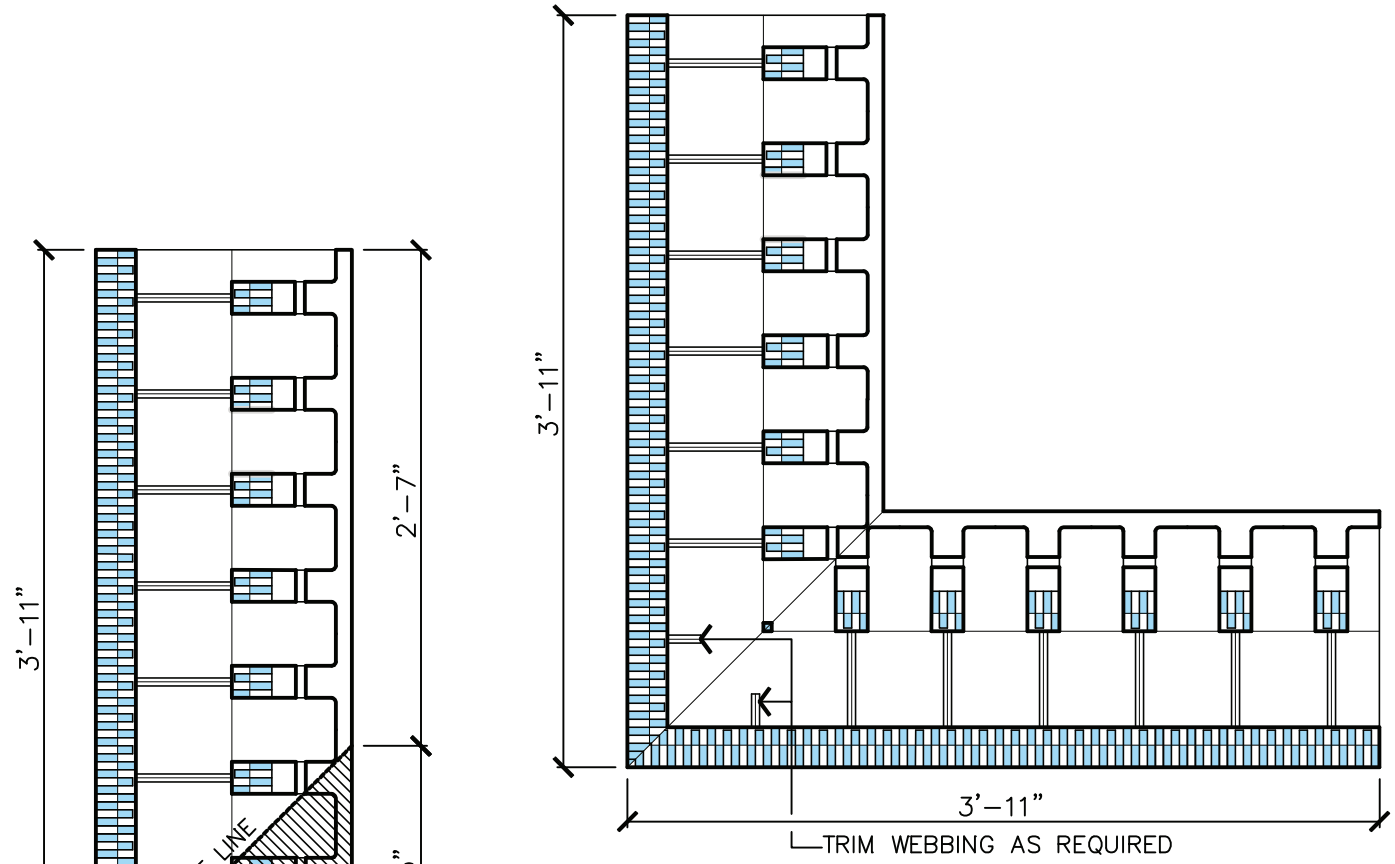

2 / 42a TOP VIEW
SCALE: 1 1/2" = 1'–0"

DISCARD THIS PORTION

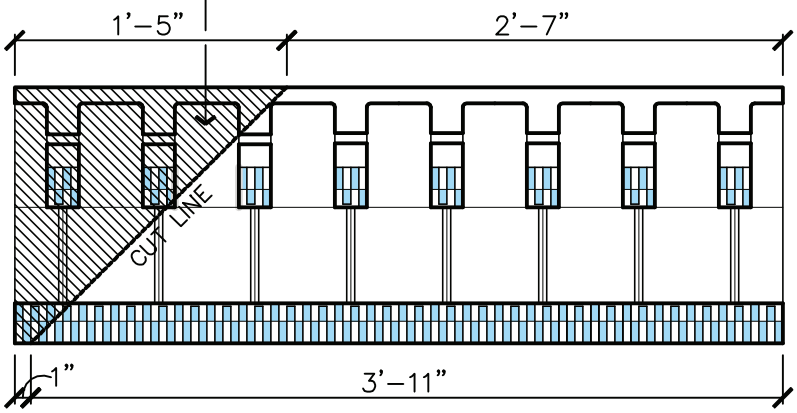

CUTTING NOTES:

A. BY FOLLOWING THE PRESCRIBED CUT DIMENSIONS (2) LEDGE BLOCKS WILL YIELD (1 90° CORNER ASSEMBLY WITH MINIMAL WASTE.

B. WHEN STACKING *4" BLOCKS ABOVE ON INSIDE MITER REMOVE 2" OF EACH LEFT & RIGHT BLOCKS RESPECTIVELY FOR WEB ALIGNMENT.

*4" PRODUCT LINE TO BE AVAILABLE 2007

1 / 42a CUTTING DIAGRAM (TOP VIEW FULL BLOCK)
SCALE: 1" = 1'–0"

NOTE:
DUE TO VARIATIONS IN SELECTED PRINTER SETTINGS, NOTED SCALES MAY NO LONGER BE APPLICABLE

BuildBlock® BUILDING SYSTEMS

9705 N. BROADWAY EXTENSION, SUITE 200, OKLAHOMA CITY, OK 73114
OFFICE: 405-840-3386 | TOLL FREE: 866-222-2575 | FAX: 831-597-0792
BUILDBLOCK.COM

6" LEDGEBLOCK INSIDE 90° MITER NO. 1

DATE/REV	02-09-06	SCALE	NTS	DETAIL SHEET
NOTES				42A

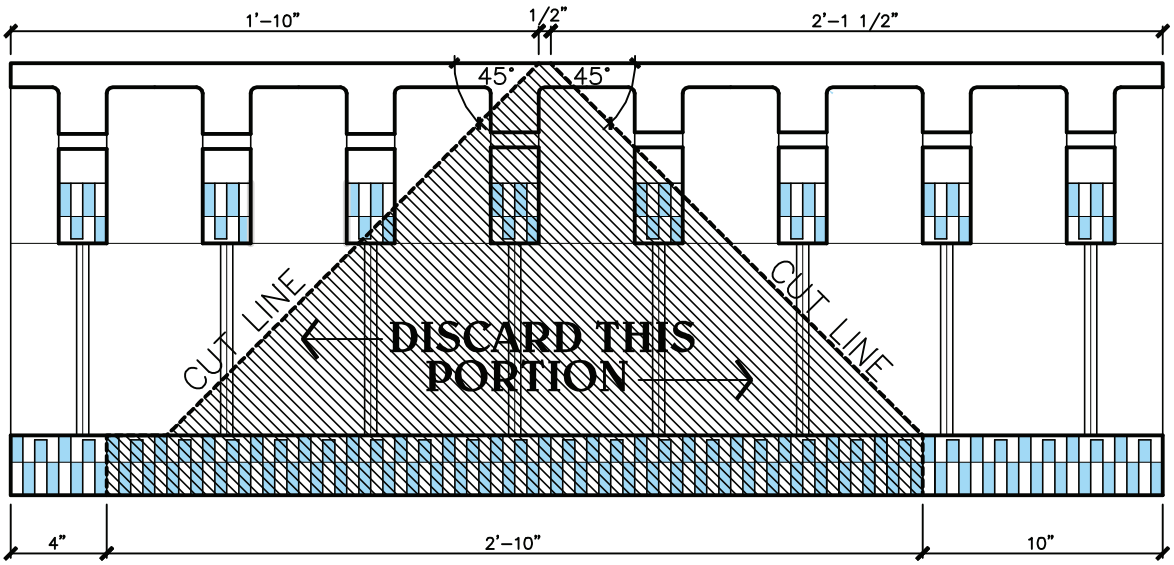

3/43 CUTTING DIAGRAM (TOP VIEW FULL BLOCK)
SCALE: 1 1/2" = 1'–0"

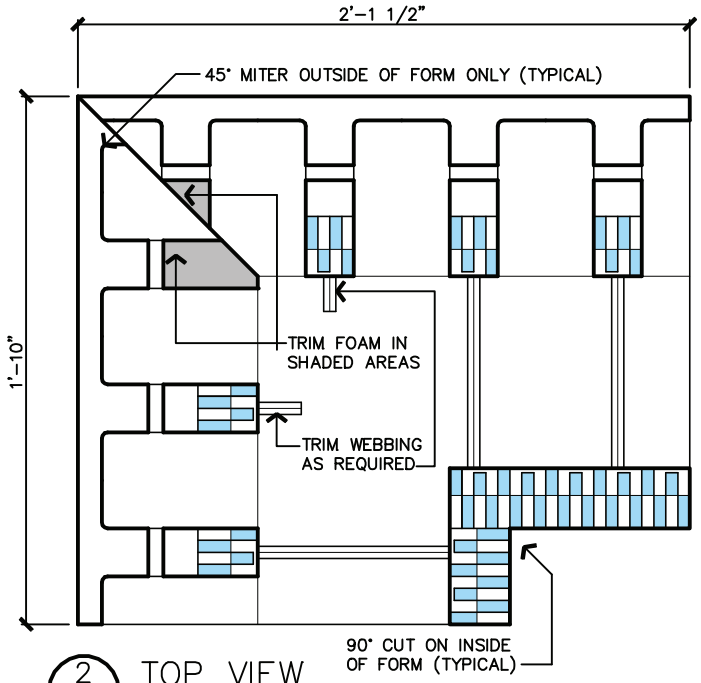

2/43 TOP VIEW
SCALE: 1 1/2" = 1'–0"

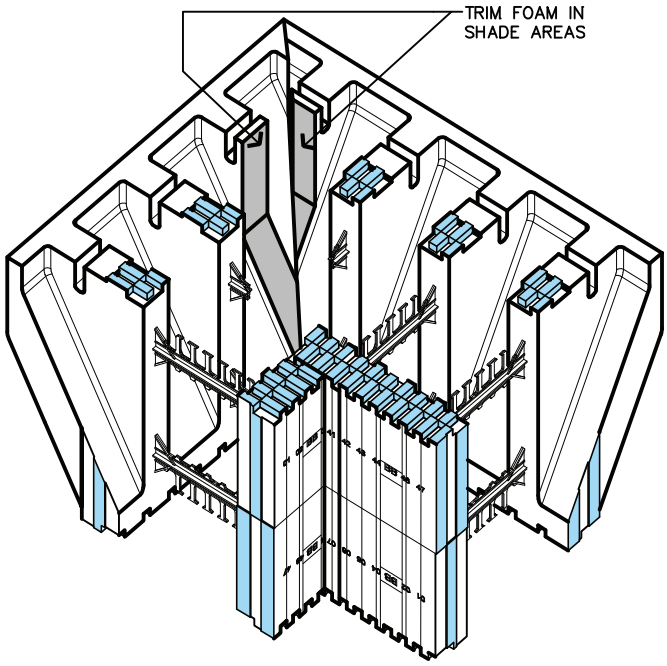

1/43 PERSPECTIVE VIEW
NO SCALE

CUTTING NOTES:

BY FOLLOWING THE PRESCRIBED CUT DIMENSIONS EACH LEDGE BLOCK WILL YIELD (1) 90° CORNER ASSEMBLY WITH MINIMAL WASTE.

NOTE:

DUE TO VARIATIONS IN SELECTED PRINTER SETTINGS, NOTED SCALES MAY NO LONGER BE APPLICABLE

BuildBlock BUILDING SYSTEMS

8" LEDGEBLOCK OUTSIDE 90° MITER NO. 2

DATE/REV	03-02-06 /1	SCALE	NTS	DETAIL SHEET
NOTES				43

9705 N. BROADWAY EXTENSION, SUITE 200, OKLAHOMA CITY, OK 73114
OFFICE: 405-840-3386 | TOLL FREE: 866-222-2575 | FAX: 831-597-0792
BUILDBLOCK.COM

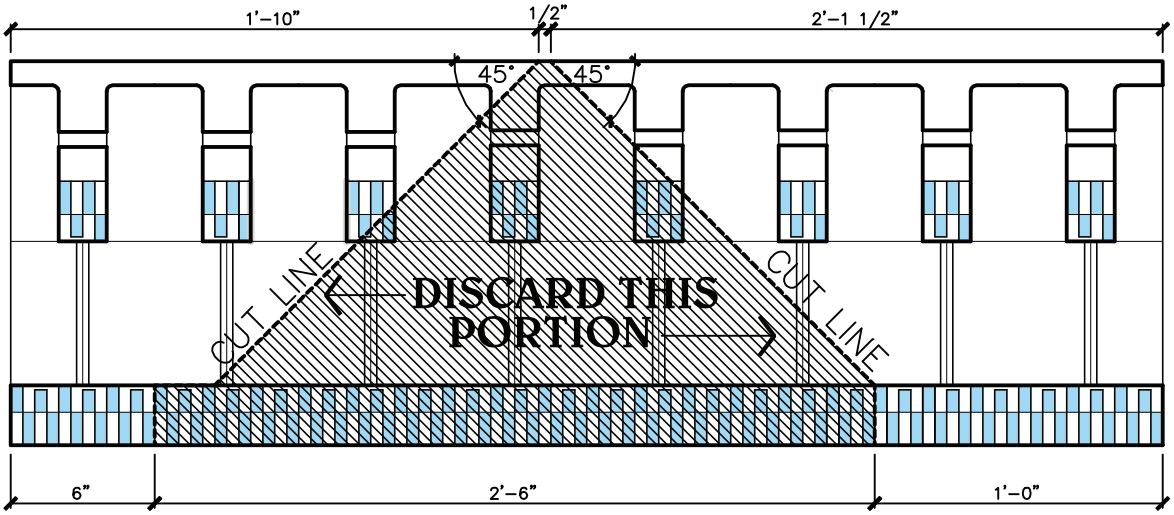

3 / 43a CUTTING DIAGRAM (TOP VIEW FULL BLOCK)
SCALE: 1 1/2" = 1'–0"

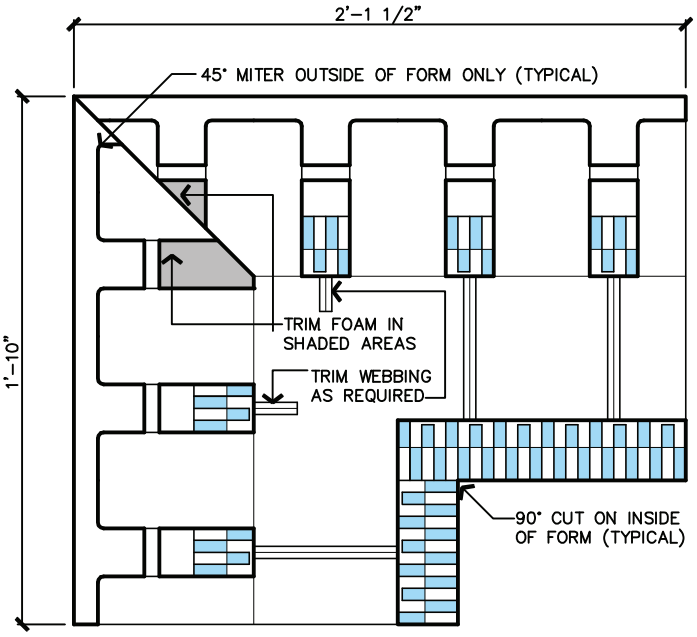

2 / 43a TOP VIEW
SCALE: 1 1/2" = 1'–0"

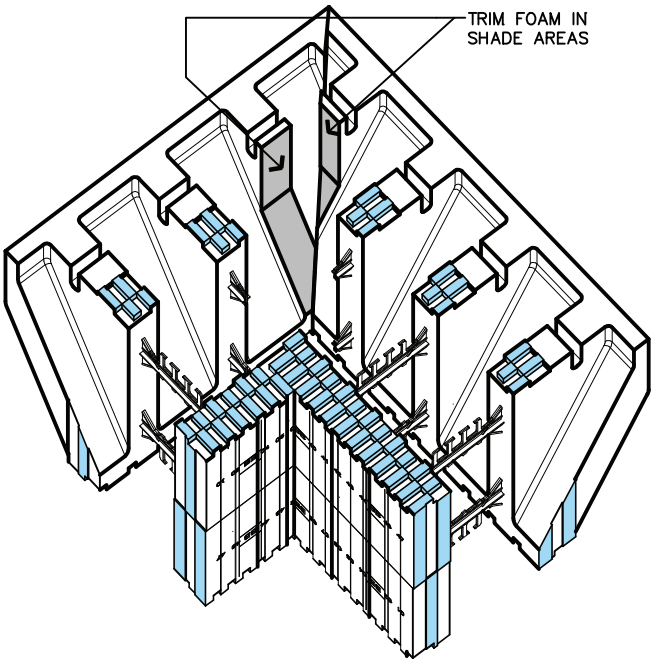

1 / 43a PERSPECTIVE VIEW
NO SCALE

CUTTING NOTES:

BY FOLLOWING THE PRESCRIBED CUT DIMENSIONS EACH LEDGE BLOCK WILL YIELD (1) 90° CORNER ASSEMBLY WITH MINIMAL WASTE.

NOTE:

DUE TO VARIATIONS IN SELECTED PRINTER SETTINGS, NOTED SCALES MAY NO LONGER BE APPLICABLE

BuildBlock BUILDING SYSTEMS

9705 N. BROADWAY EXTENSION, SUITE 200, OKLAHOMA CITY, OK 73114
OFFICE: 405-840-3386 | TOLL FREE: 866-222-2575 | FAX: 831-597-0792
BUILDBLOCK.COM

6" LEDGEBLOCK OUTSIDE 90° MITER NO. 2

DATE/REV	03-02-03 /1	SCALE	NTS	DETAIL SHEET
NOTES				43A

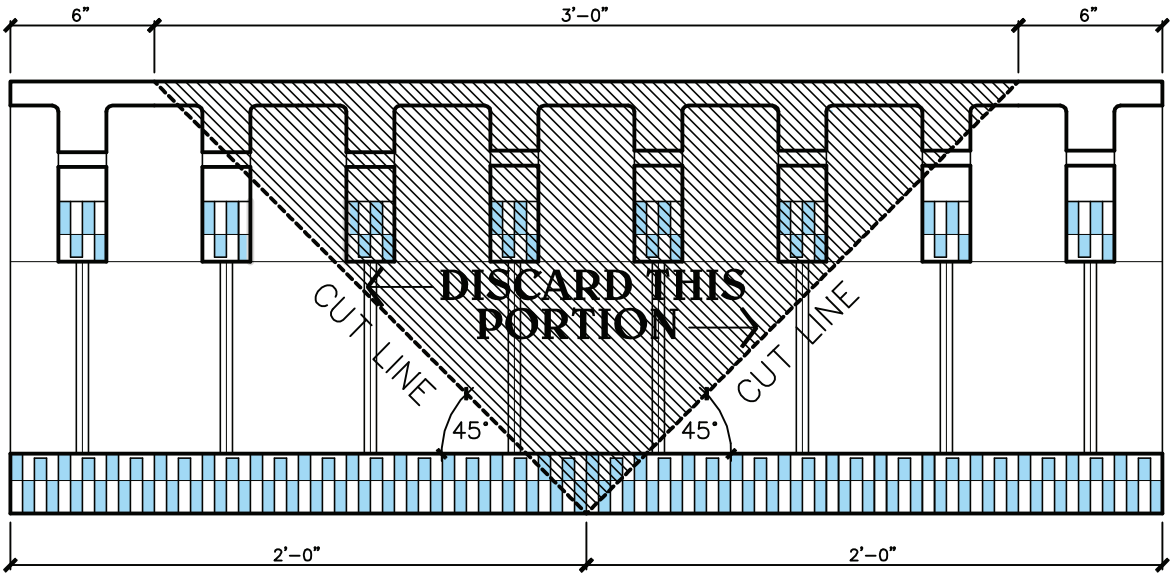

2/44 CUTTING DIAGRAM (TOP VIEW FULL BLOCK)
SCALE: 1 1/2" = 1'–0"

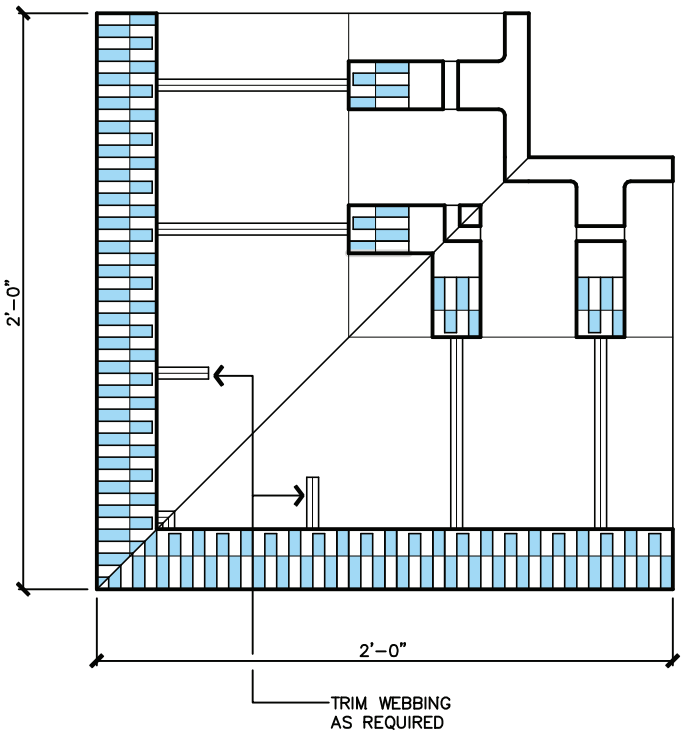

1/44 TOP VIEW
SCALE: 1 1/2" = 1'–0"

CUTTING NOTES:

BY FOLLOWING THE PRESCRIBED CUT DIMENSIONS EACH LEDGE BLOCK WILL YIELD (1) 90° CORNER ASSEMBLY WITH MINIMAL WASTE.

NOTE:
DUE TO VARIATIONS IN SELECTED PRINTER SETTINGS, NOTED SCALES MAY NO LONGER BE APPLICABLE

BuildBlock® BUILDING SYSTEMS

9705 N. BROADWAY EXTENSION, SUITE 200, OKLAHOMA CITY, OK 73114
OFFICE: 405-840-3386 | TOLL FREE: 866-222-2575 | FAX: 831-597-0792
BUILDBLOCK.COM

LEDGEBLOCK INSIDE 90° MITER NO. 2

DATE/REV	12-01-04 /1	SCALE	NTS	DETAIL SHEET
NOTES				44

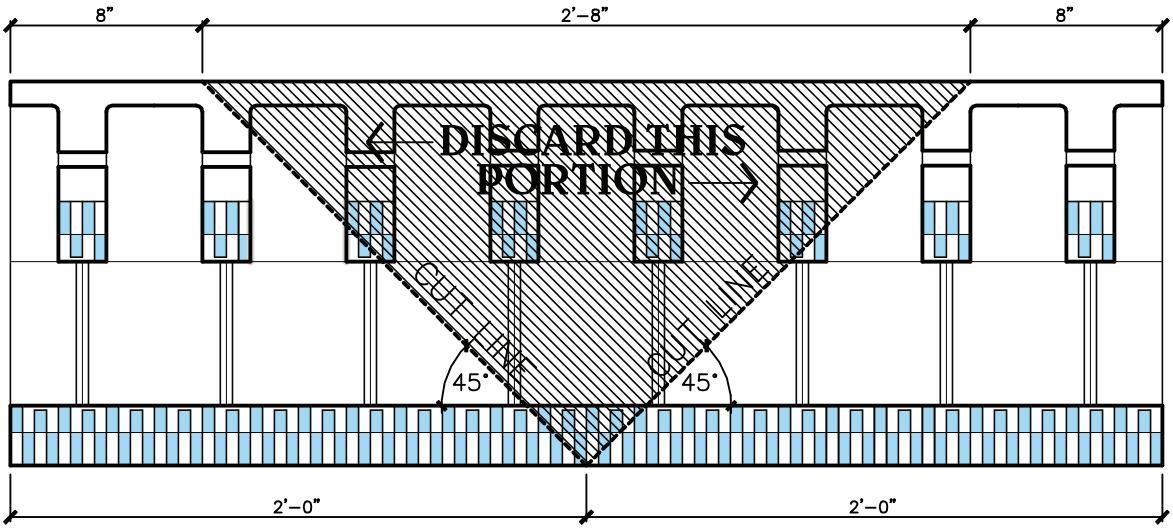

2 / 44a CUTTING DIAGRAM (TOP VIEW FULL BLOCK)
SCALE: 1 1/2" = 1'–0"

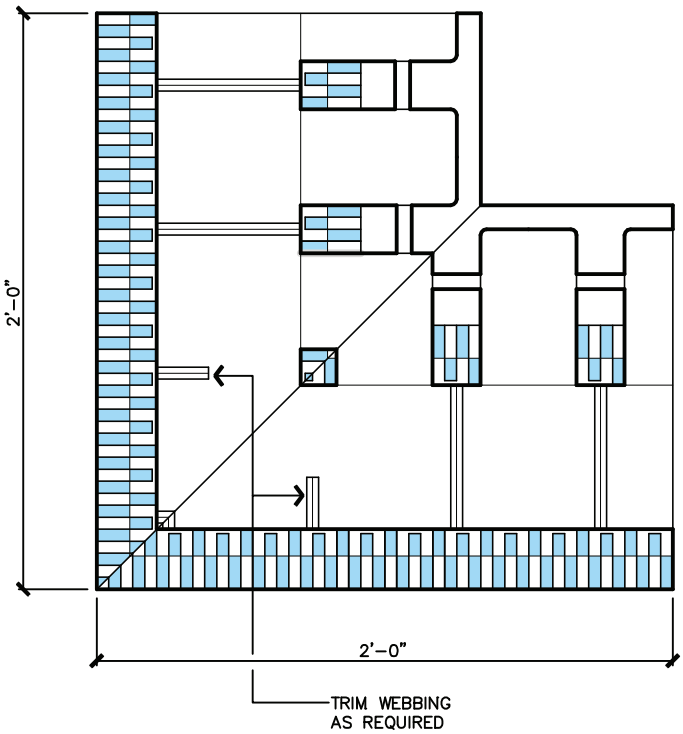

1 / 44a TOP VIEW
SCALE: 1 1/2" = 1'–0"

CUTTING NOTES:

BY FOLLOWING THE PRESCRIBED CUT DIMENSIONS EACH LEDGE BLOCK WILL YIELD (1) 90° CORNER ASSEMBLY WITH MINIMAL WASTE.

NOTE:
DUE TO VARIATIONS IN SELECTED PRINTER SETTINGS, NOTED SCALES MAY NO LONGER BE APPLICABLE

BuildBlock® BUILDING SYSTEMS

9705 N. BROADWAY EXTENSION, SUITE 200, OKLAHOMA CITY, OK 73114
OFFICE: 405-840-3386 | TOLL FREE: 866-222-2575 | FAX: 831-597-0792
BUILDBLOCK.COM

6" LEDGEBLOCK INSIDE 90° MITER NO. 2

DATE/REV	02-09-06	SCALE	NTS	DETAIL SHEET
NOTES				44A

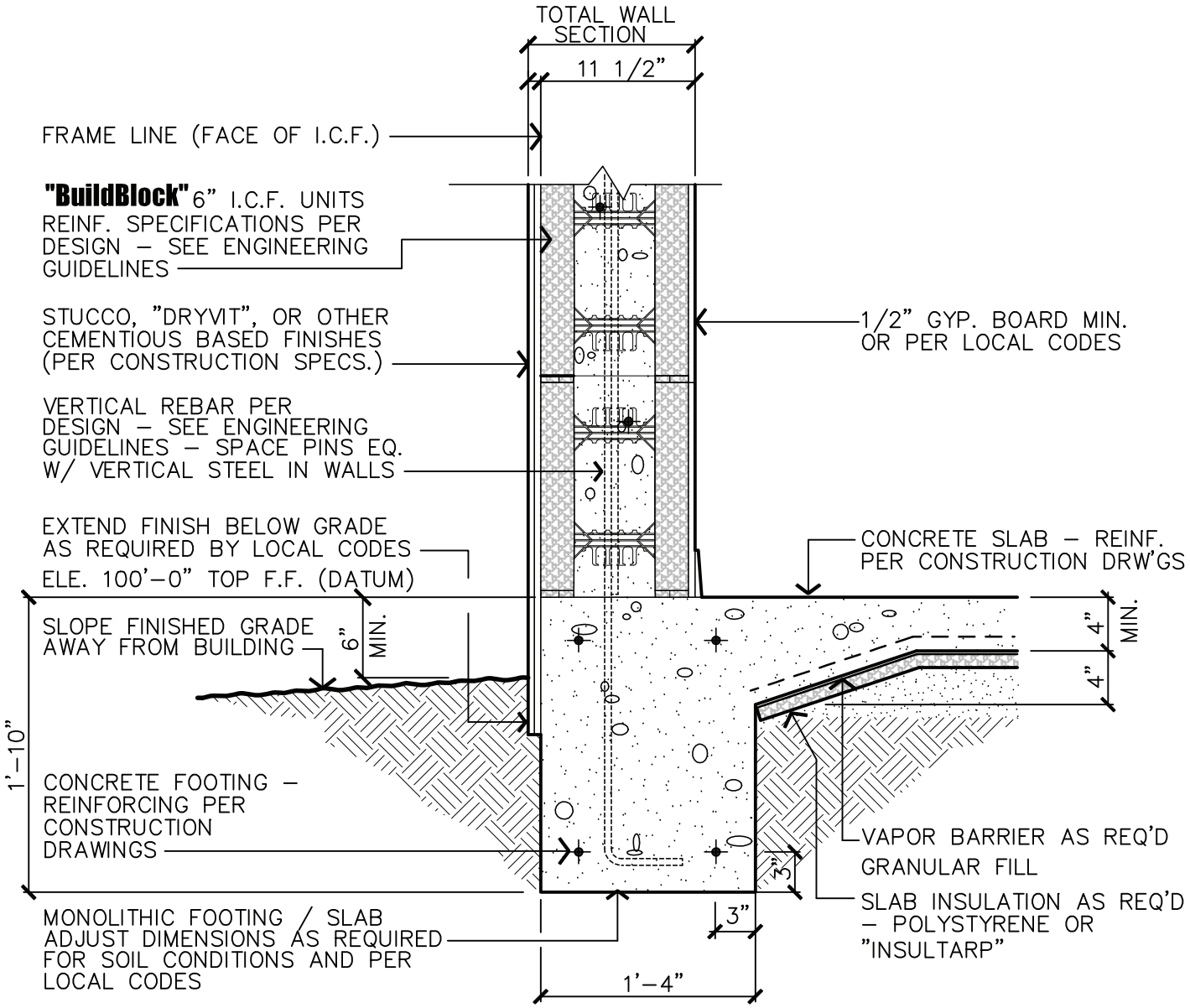

FOR ADDITIONAL INFORMATION ABOUT "INSULTARP" CONTACT THEM AT (866) 698–6562 OR ONLINE AT: WWW.INSULATIONSOLUTIONS.COM

NOTE:
DUE TO VARIATIONS IN SELECTED PRINTER SETTINGS, NOTED SCALES MAY NO LONGER BE APPLICABLE

1/45 TYPICAL FOUNDATION DETAIL
SCALE: 1" = 1'–0"

BuildBlock BUILDING SYSTEMS

MONOLITHIC FOOTING / SLAB WITH STUCCO/EIFS

DATE/REV	07-21-05 /1	SCALE	NTS	DETAIL SHEET
NOTES				45

9705 N. BROADWAY EXTENSION, SUITE 200, OKLAHOMA CITY, OK 73114
OFFICE: 405-840-3386 | TOLL FREE: 866-222-2575 | FAX: 831-597-0792
BUILDBLOCK.COM

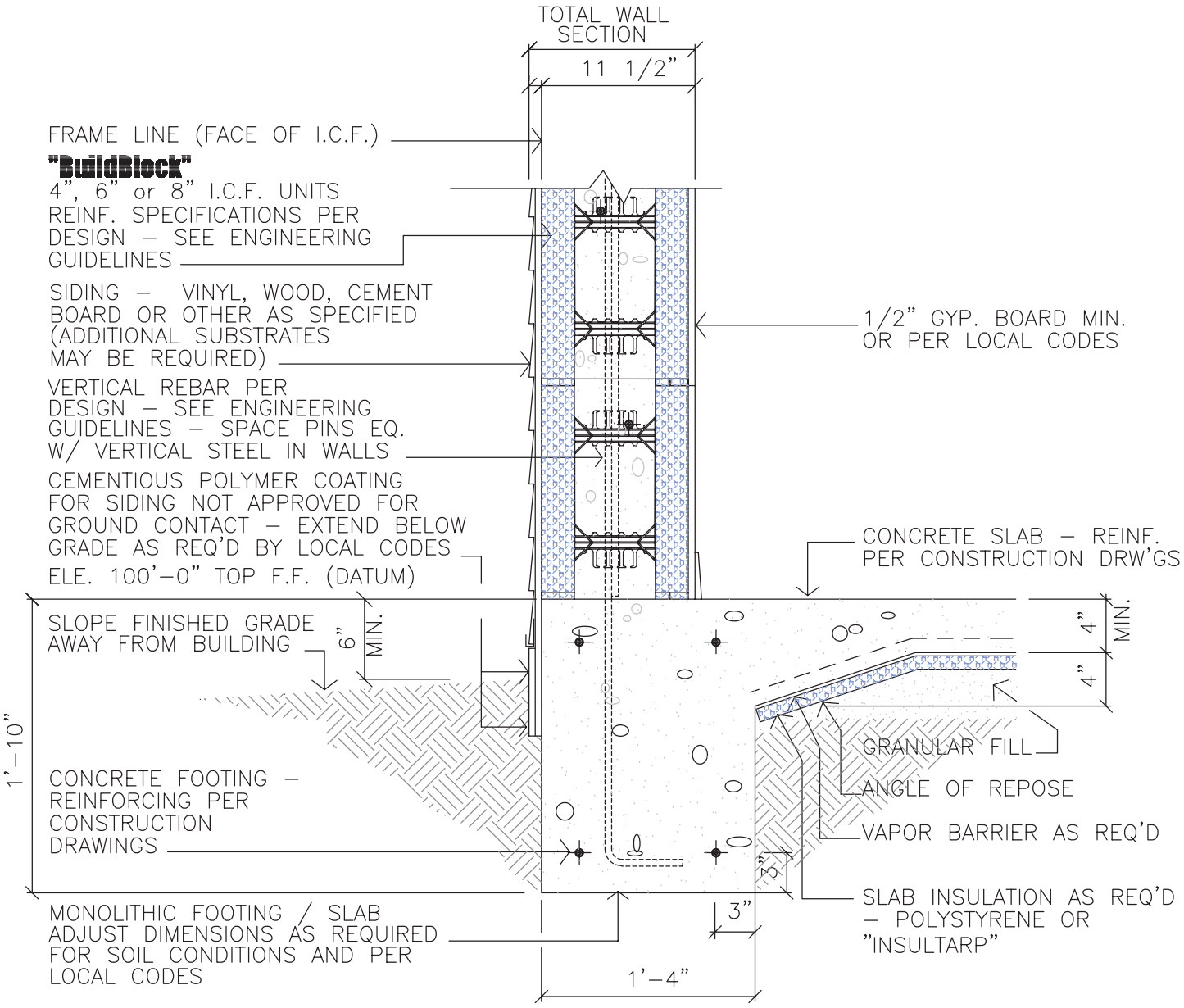

FOR ADDITIONAL INFORMATION ABOUT "INSULTARP" CONTACT THEM AT (866) 698–6562 OR ONLINE AT: WWW.INSULATIONSOLUTIONS.COM

NOTE:
DUE TO VARIATIONS IN SELECTED PRINTER SETTINGS, NOTED SCALES MAY NO LONGER BE APPLICABLE

1 / 45a TYPICAL FOUNDATION DETAIL
SCALE: 1" = 1'–0"

BuildBlock® BUILDING SYSTEMS

9705 N. BROADWAY EXTENSION, SUITE 200, OKLAHOMA CITY, OK 73114
OFFICE: 405-840-3386 | TOLL FREE: 866-222-2575 | FAX: 831-597-0792
BUILDBLOCK.COM

MONOLITHIC FOOTING / SLAB SIDING

DATE/REV	11-17-09	SCALE	NTS	DETAIL SHEET
NOTES				45A

CONSTRUCTION SHALL BE IN ACCORDANCE WITH ALL APPLICABLE LOCAL AND NATIONAL CODES. ALL DRAWINGS ARE SUBJECT TO CHANGE WITHOUT NOTICE.

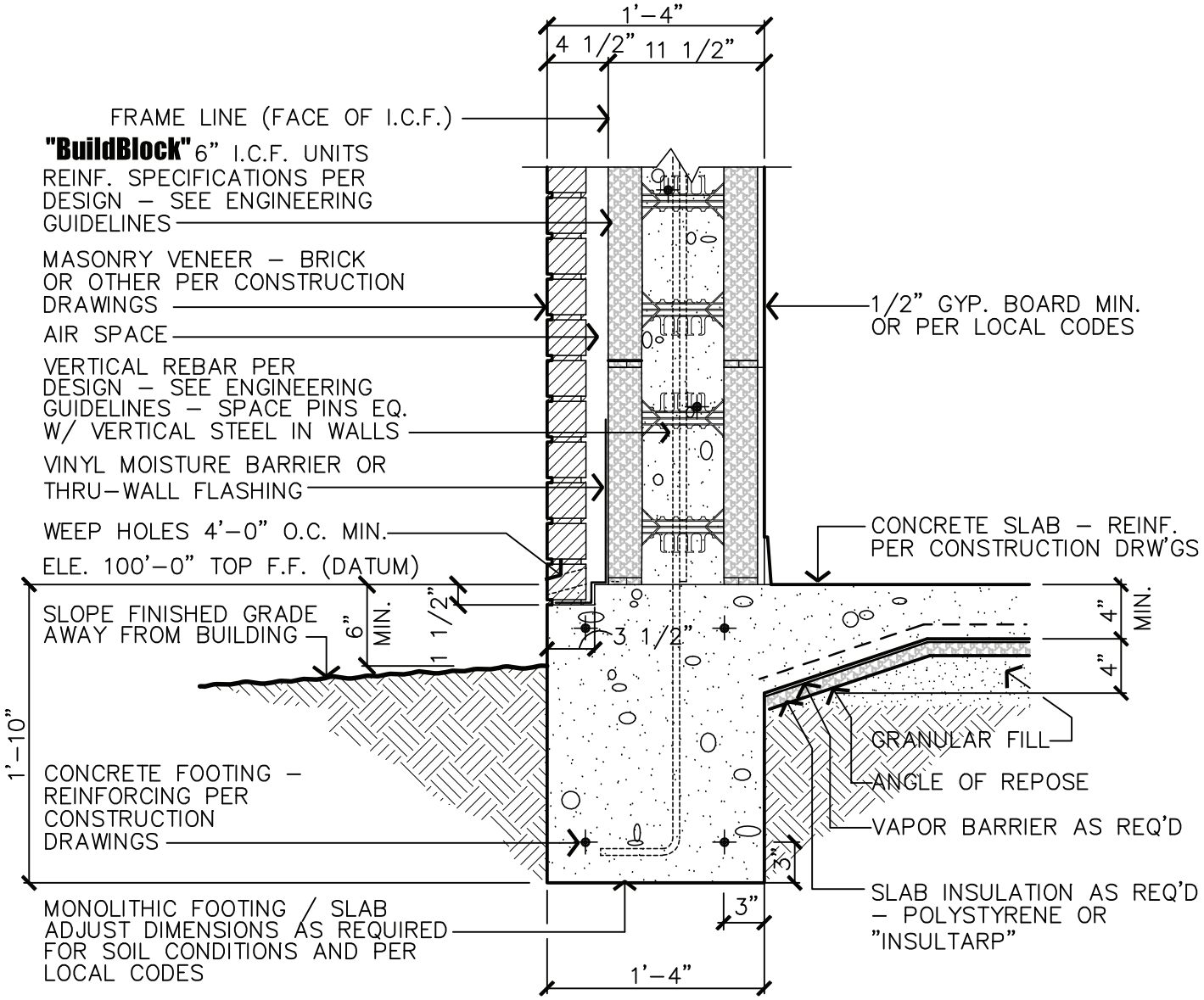

FOR ADDITIONAL INFORMATION ABOUT "INSULTARP" CONTACT THEM AT (866) 698–6562 OR ONLINE AT: WWW.INSULATIONSOLUTIONS.COM

NOTE:
DUE TO VARIATIONS IN SELECTED PRINTER SETTINGS, NOTED SCALES MAY NO LONGER BE APPLICABLE

1/46 TYPICAL FOUNDATION DETAIL
SCALE: 1" = 1'–0"

BuildBlock BUILDING SYSTEMS

MONOLITHIC FOOTING / SLAB BRICK/MASONRY

DATE/REV	07-21-05 /1	SCALE	NTS	DETAIL SHEET
NOTES				46

9705 N. BROADWAY EXTENSION, SUITE 200, OKLAHOMA CITY, OK 73114
OFFICE: 405-840-3386 | TOLL FREE: 866-222-2575 | FAX: 831-597-0792
BUILDBLOCK.COM

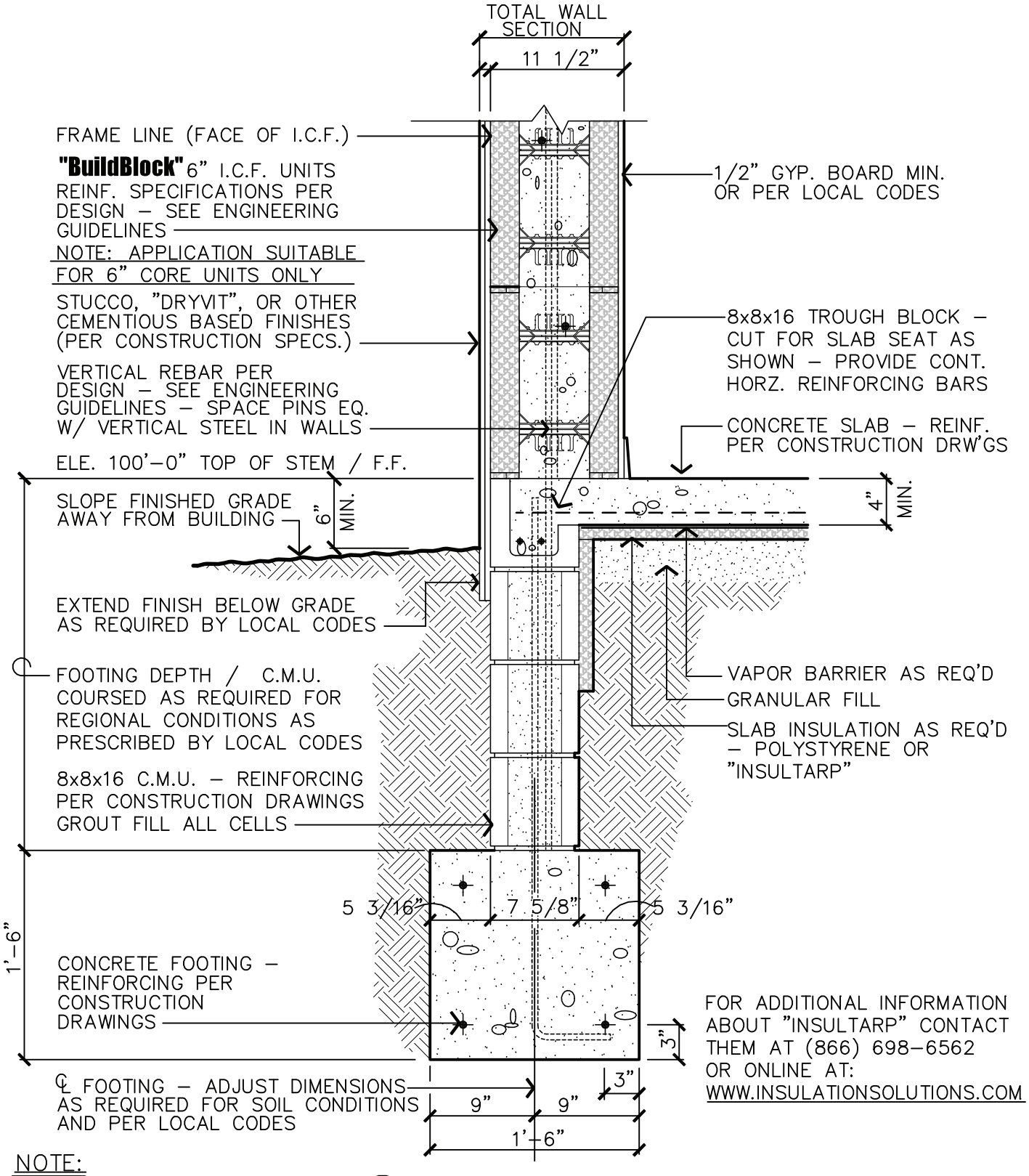

FOR ADDITIONAL INFORMATION ABOUT "INSULTARP" CONTACT THEM AT (866) 698–6562 OR ONLINE AT: WWW.INSULATIONSOLUTIONS.COM

NOTE:
DUE TO VARIATIONS IN SELECTED PRINTER SETTINGS, NOTED SCALES MAY NO LONGER BE APPLICABLE

1/47 TYPICAL FOUNDATION DETAIL
SCALE: 1" = 1'–0"

BuildBlock BUILDING SYSTEMS

CONCRETE MASONRY UNIT (CMU) STEMWALL

DATE/REV	07-21-05 /1	SCALE	NTS	DETAIL SHEET
NOTES				47

9705 N. BROADWAY EXTENSION, SUITE 200, OKLAHOMA CITY, OK 73114
OFFICE: 405-840-3386 | TOLL FREE: 866-222-2575 | FAX: 831-597-0792
BUILDBLOCK.COM

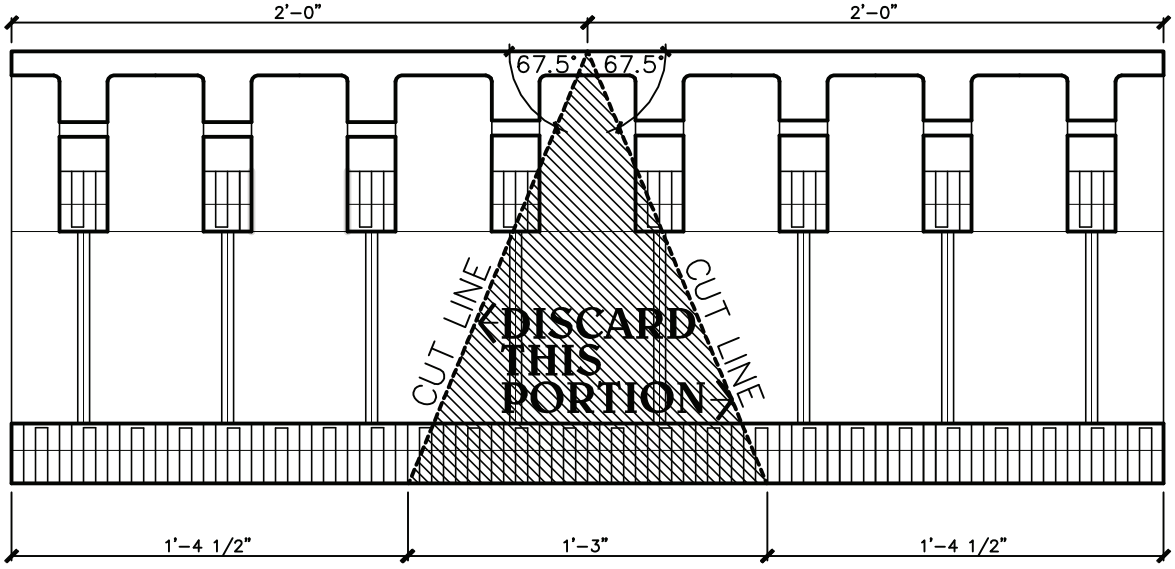

2/48 CUTTING DIAGRAM (TOP VIEW FULL BLOCK
SCALE: 1 1/2" = 1'–0"

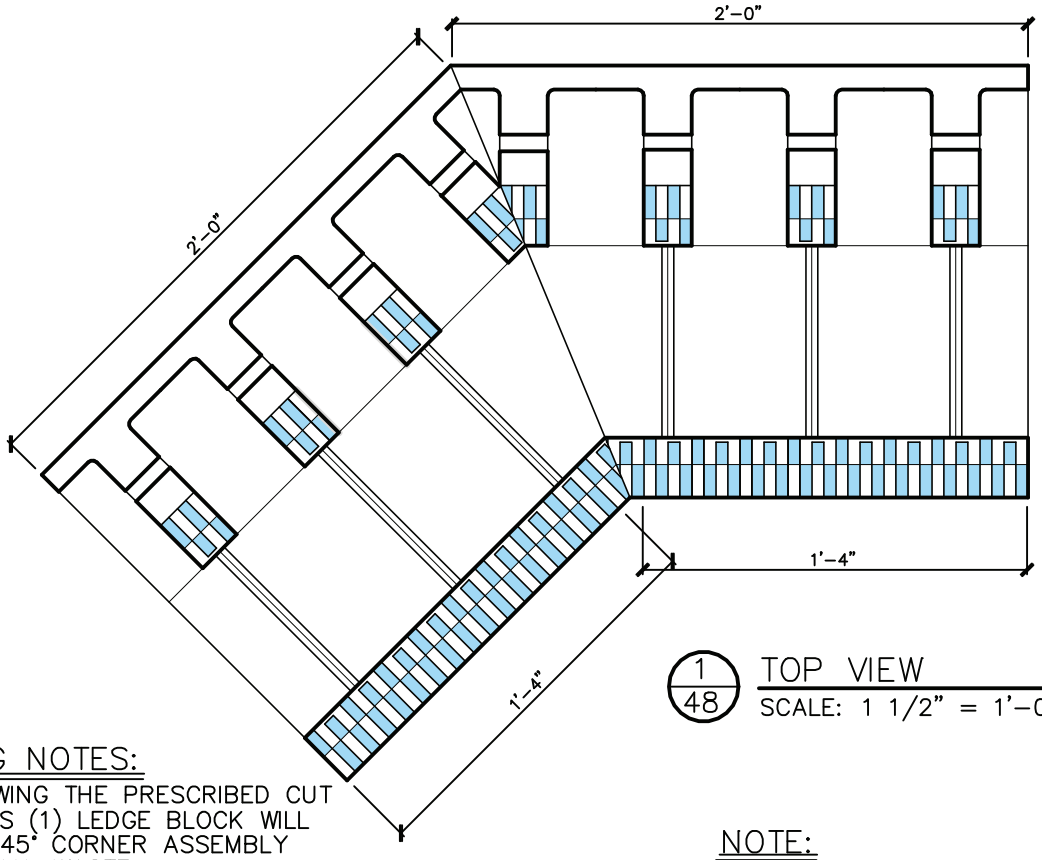

1/48 TOP VIEW
SCALE: 1 1/2" = 1'–0"

CUTTING NOTES:

BY FOLLOWING THE PRESCRIBED CUT DIMENSIONS (1) LEDGE BLOCK WILL YIELD (1) 45° CORNER ASSEMBLY WITH MINIMAL WASTE.

NOTE:

DUE TO VARIATIONS IN SELECTED PRINTER SETTINGS, NOTED SCALES MAY NO LONGER BE APPLICABLE

BuildBlock BUILDING SYSTEMS

8" LEDGEBLOCK 45° OUTSIDE MITER

DATE/REV	05-04-06	SCALE	NTS	DETAIL SHEET
NOTES				48

9705 N. BROADWAY EXTENSION, SUITE 200, OKLAHOMA CITY, OK 73114
OFFICE: 405-840-3386 | TOLL FREE: 866-222-2575 | FAX: 831-597-0792
BUILDBLOCK.COM

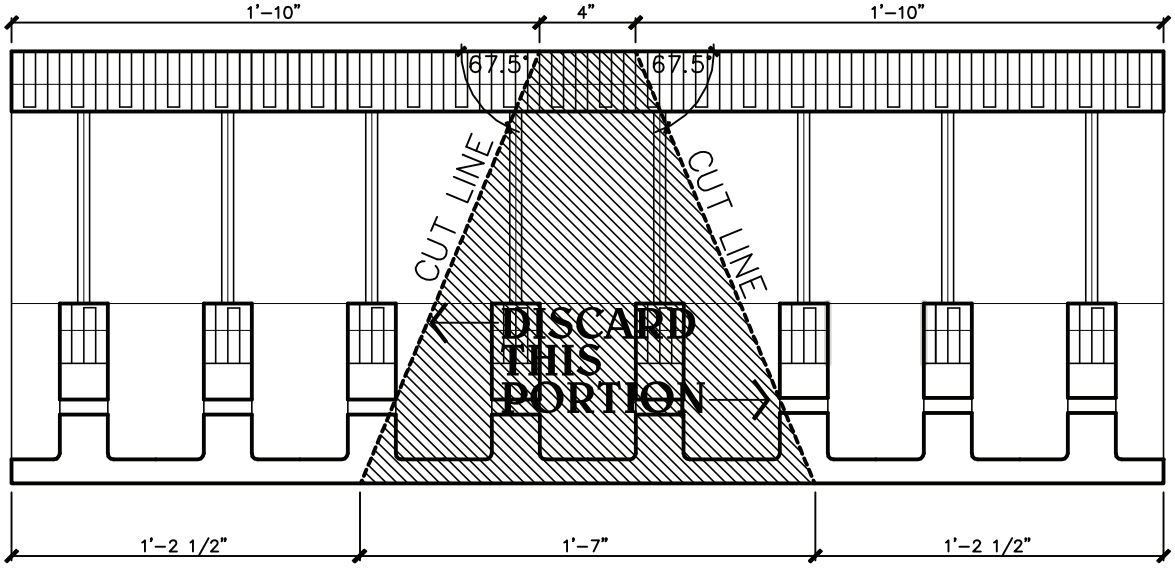

2/49 CUTTING DIAGRAM (TOP VIEW FULL BLOCK
SCALE: 1 1/2" = 1'–0"

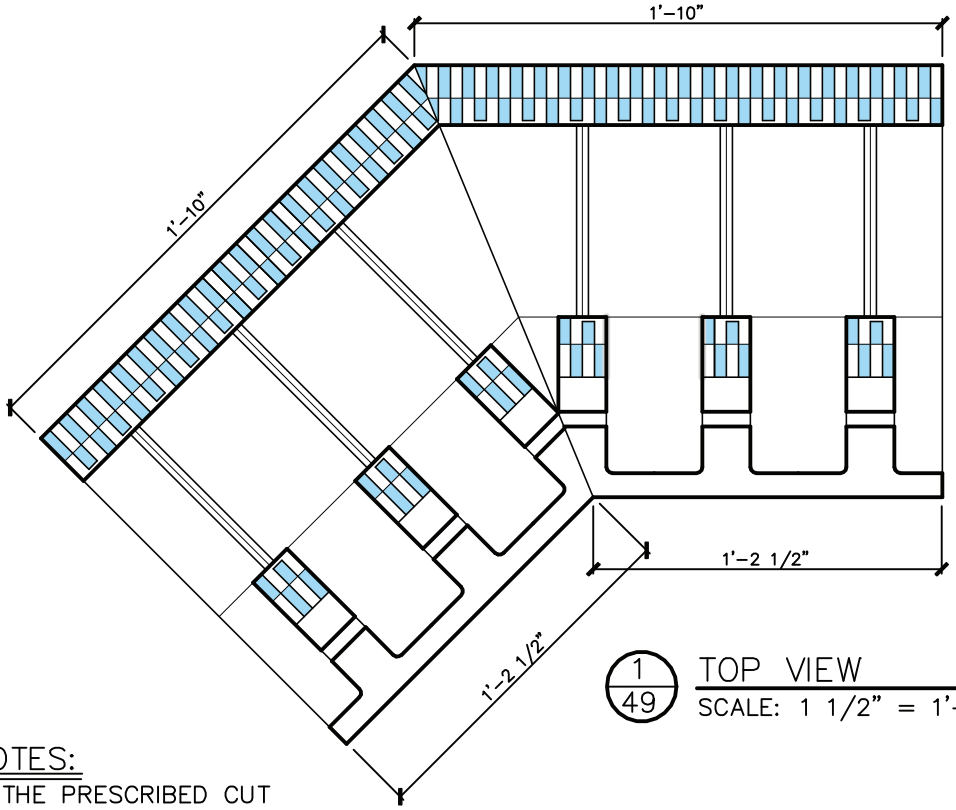

1/49 TOP VIEW
SCALE: 1 1/2" = 1'–0"

CUTTING NOTES:

BY FOLLOWING THE PRESCRIBED CUT DIMENSIONS (1) LEDGE BLOCK WILL YIELD (1) 45° CORNER ASSEMBLY WITH MINIMAL WASTE.

NOTE:

DUE TO VARIATIONS IN SELECTED PRINTER SETTINGS, NOTED SCALES MAY NO LONGER BE APPLICABLE

BuildBlock® BUILDING SYSTEMS

8" LEDGEBLOCK 45° INSIDE MITER

DATE/REV	05-04-06	SCALE	NTS	DETAIL SHEET
NOTES				49

9705 N. BROADWAY EXTENSION, SUITE 200, OKLAHOMA CITY, OK 73114
OFFICE: 405-840-3386 | TOLL FREE: 866-222-2575 | FAX: 831-597-0792
BUILDBLOCK.COM

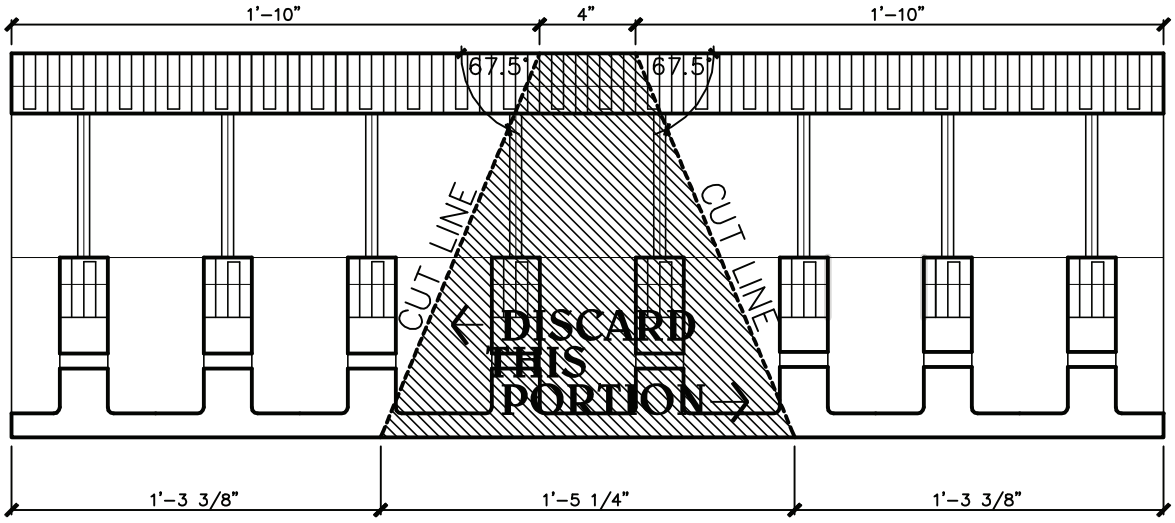

2/50 CUTTING DIAGRAM (TOP VIEW FULL BLOCK
SCALE: 1 1/2" = 1'–0"

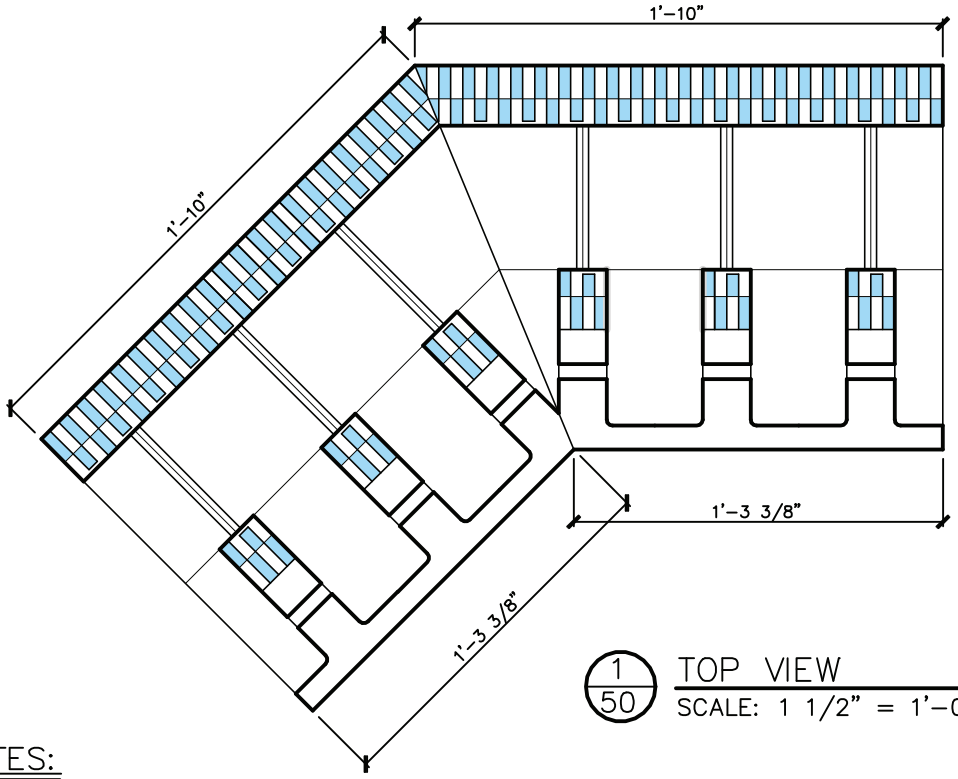

1/50 TOP VIEW
SCALE: 1 1/2" = 1'–0"

CUTTING NOTES:

BY FOLLOWING THE PRESCRIBED CUT DIMENSIONS (1) LEDGE BLOCK WILL YIELD (1) 45° CORNER ASSEMBLY WITH MINIMAL WASTE.

NOTE:

DUE TO VARIATIONS IN SELECTED PRINTER SETTINGS, NOTED SCALES MAY NO LONGER BE APPLICABLE

BuildBlock® BUILDING SYSTEMS

6" LEDGEBLOCK 45° INSIDE MITER

DATE/REV	05-04-06	SCALE	NTS	DETAIL SHEET
NOTES				50

9705 N. BROADWAY EXTENSION, SUITE 200, OKLAHOMA CITY, OK 73114
OFFICE: 405-840-3386 | TOLL FREE: 866-222-2575 | FAX: 831-597-0792
BUILDBLOCK.COM

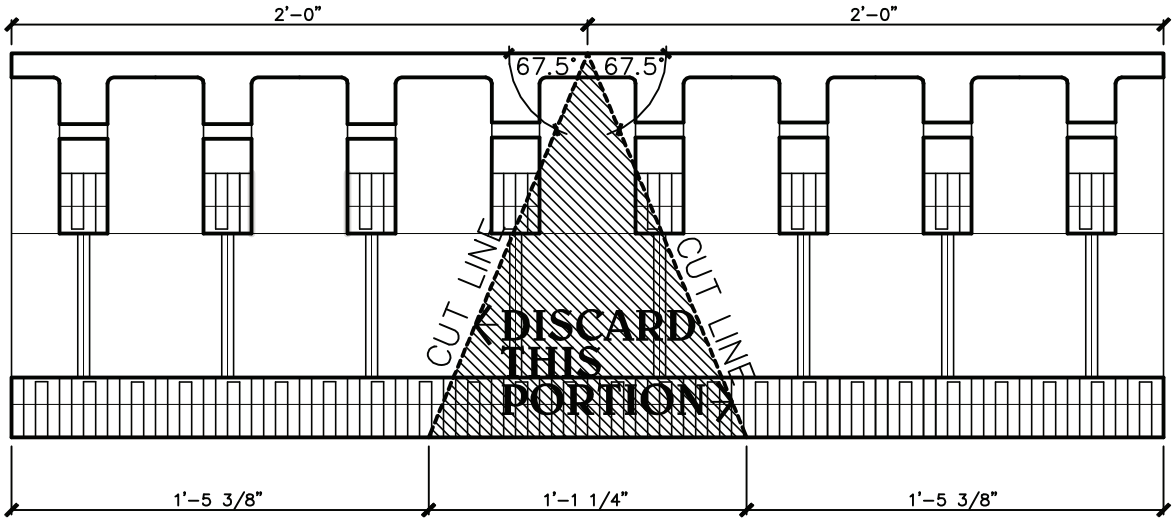

2/51 CUTTING DIAGRAM (TOP VIEW FULL BLOCK)
SCALE: 1 1/2" = 1'–0"

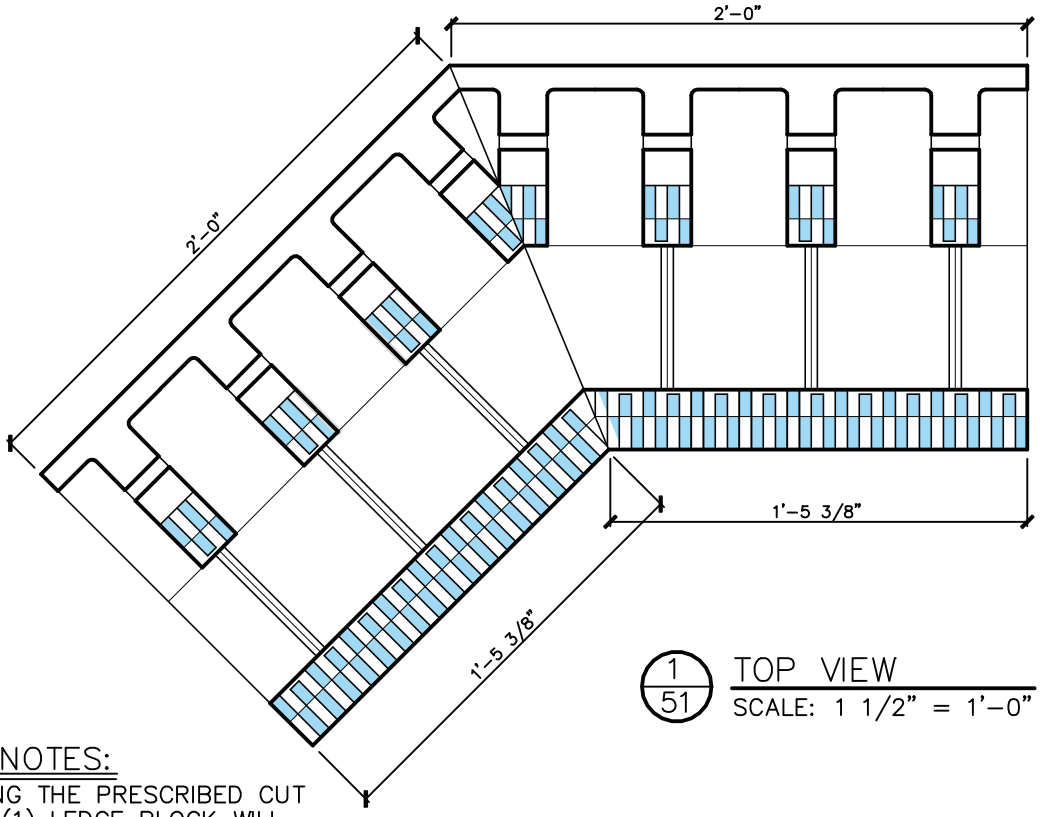

1/51 TOP VIEW
SCALE: 1 1/2" = 1'–0"

CUTTING NOTES:

BY FOLLOWING THE PRESCRIBED CUT DIMENSIONS (1) LEDGE BLOCK WILL YIELD (1) 45° CORNER ASSEMBLY WITH MINIMAL WASTE.

NOTE:

DUE TO VARIATIONS IN SELECTED PRINTER SETTINGS, NOTED SCALES MAY NO LONGER BE APPLICABLE

BuildBlock BUILDING SYSTEMS

6" LEDGEBLOCK 45° OUTSIDE MITER

DATE/REV	05-04-06	SCALE	NTS	DETAIL SHEET
NOTES				51

9705 N. BROADWAY EXTENSION, SUITE 200, OKLAHOMA CITY, OK 73114
OFFICE: 405-840-3386 | TOLL FREE: 866-222-2575 | FAX: 831-597-0792
BUILDBLOCK.COM

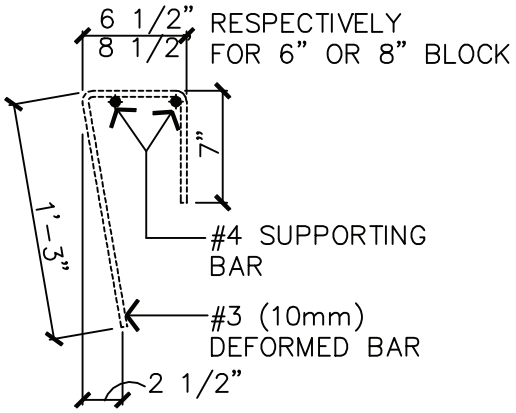

2/52 STIRRUP DETAIL
SCALE: 1" = 1'-0"

MINIMUM SPACING:
1. VENEER – 1000 lb/ft (15kN/m @ 18" (450mm)
2. VENEER – 1500 lb/ft (22kN/m @ 12" (300mm)

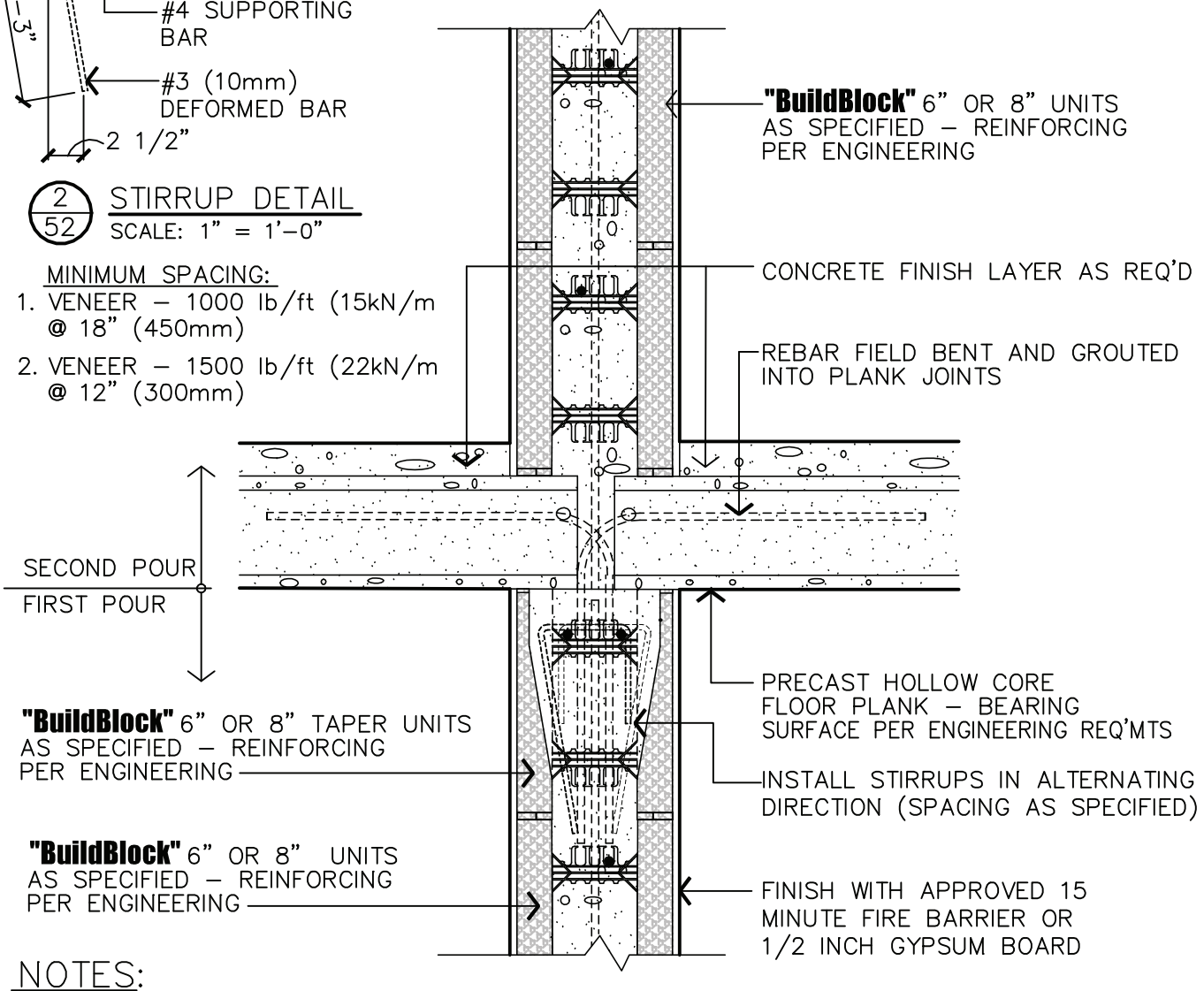

NOTES:
1. VARIATIONS IN IMPOSOSED LIVE & DEAD LOADS AND OTHER APPLICATION SPECIFIC VARIABLES REQUIRE ALL ASPECTS OF THE DETAILS SHOWN HERE TO BE DESIGNED AND /OR APPROVED BY A QUALIFIED ENGINEER
2. ALL CONSTRUCTION SHALL BE IN ACCORDANCE W/ THE SPECIFICATION OF AND THE RESPONSIBILITY OF A QUALIFIED STRUCTRURAL ENGINEER.

1/52 SECTION DEATAIL
SCALE: 1" = 1'-0"

NOTE:
DUE TO VARIATIONS IN SELECTED PRINTER SETTINGS, NOTED SCALES MAY NO LONGER BE APPLICABLE

BuildBlock BUILDING SYSTEMS

TAPER UNIT & CORE SLAB

DATE/REV	09-30-07 /2	SCALE	NTS	DETAIL SHEET
NOTES				52

9705 N. BROADWAY EXTENSION, SUITE 200, OKLAHOMA CITY, OK 73114
OFFICE: 405-840-3386 | TOLL FREE: 866-222-2575 | FAX: 831-597-0792
BUILDBLOCK.COM

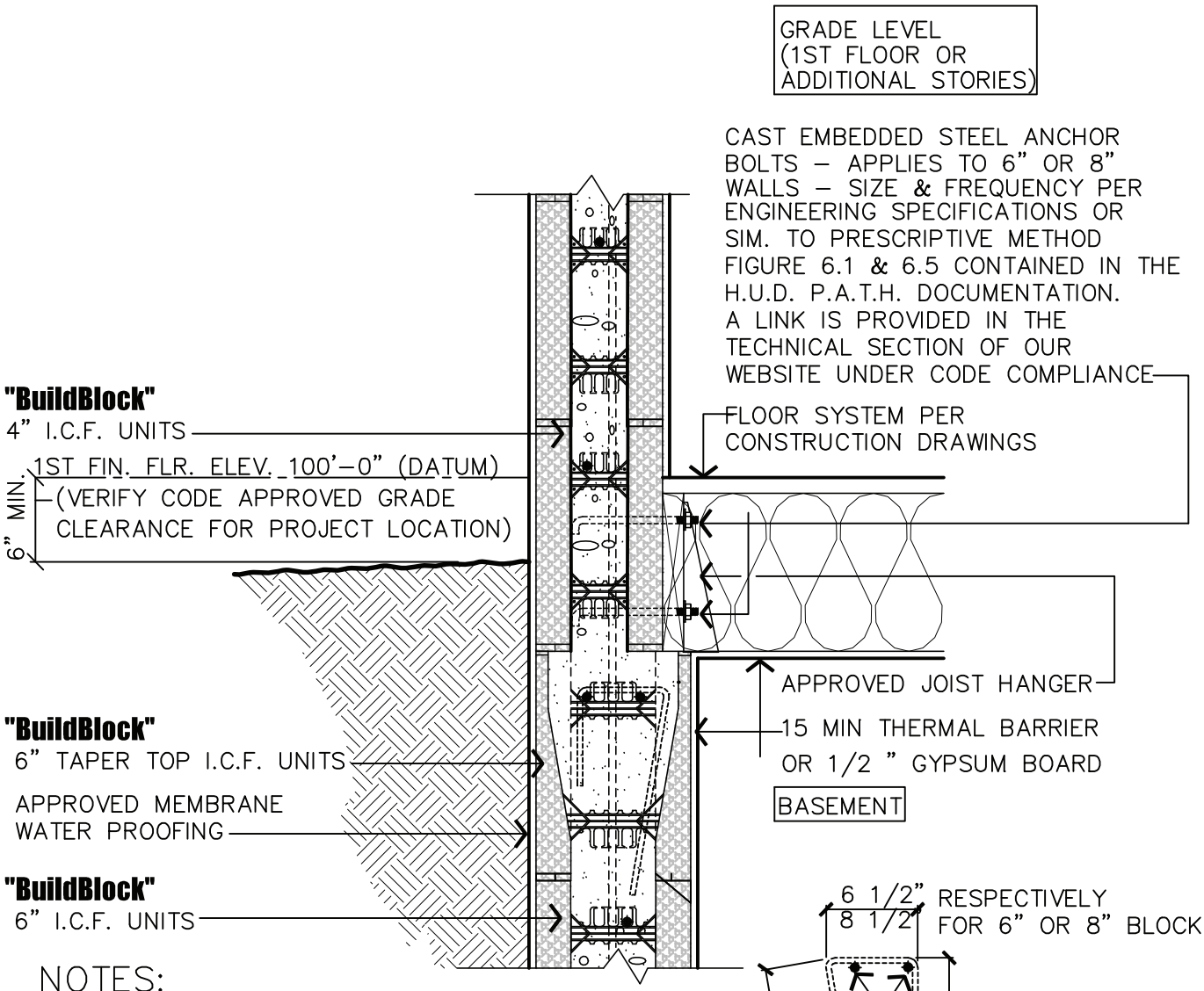

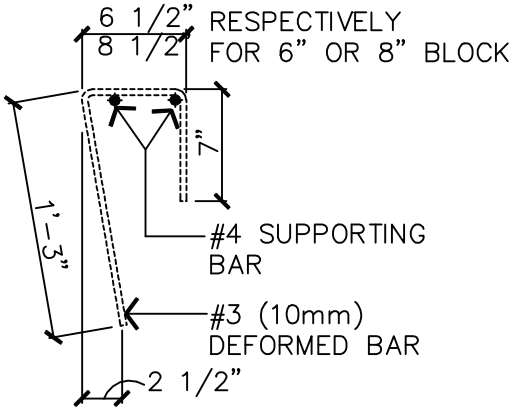

NOTES:

1. VARIATIONS IN IMPOSOSED LIVE & DEAD LOADS AND OTHER APPLICATION SPECIFIC VARIABLES REQUIRE ALL ASPECTS OF THE DETAILS SHOWN HERE TO BE DESIGNED AND /OR APPROVED BY A QUALIFIED ENGINEER
2. ALL CONSTRUCTION SHALL BE IN ACCORDANCE W/ THE SPECIFICATION OF AND THE RESPONSIBILITY OF A QUALIFIED STRUCTRURAL ENGINEER.

1/53 SECTION DEATAIL
SCALE: 1" = 1'–0"

2/53 STIRRUP DETAIL
SCALE: 1" = 1'–0"

MINIMUM SPACING:

1. VENEER – 1000 lb/ft (15kN/m @ 18" (450mm)
2. VENEER – 1500 lb/ft (22kN/m @ 12" (300mm)

NOTE:
DUE TO VARIATIONS IN SELECTED PRINTER SETTINGS, NOTED SCALES MAY NO LONGER BE APPLICABLE

BuildBlock BUILDING SYSTEMS

9705 N. BROADWAY EXTENSION, SUITE 200, OKLAHOMA CITY, OK 73114
OFFICE: 405-840-3386 | TOLL FREE: 866-222-2575 | FAX: 831-597-0792
BUILDBLOCK.COM

TAPER UNIT & LEDGE CONNECTION 1

DATE/REV	09-30-07 /2	SCALE	NTS	DETAIL SHEET
NOTES				53

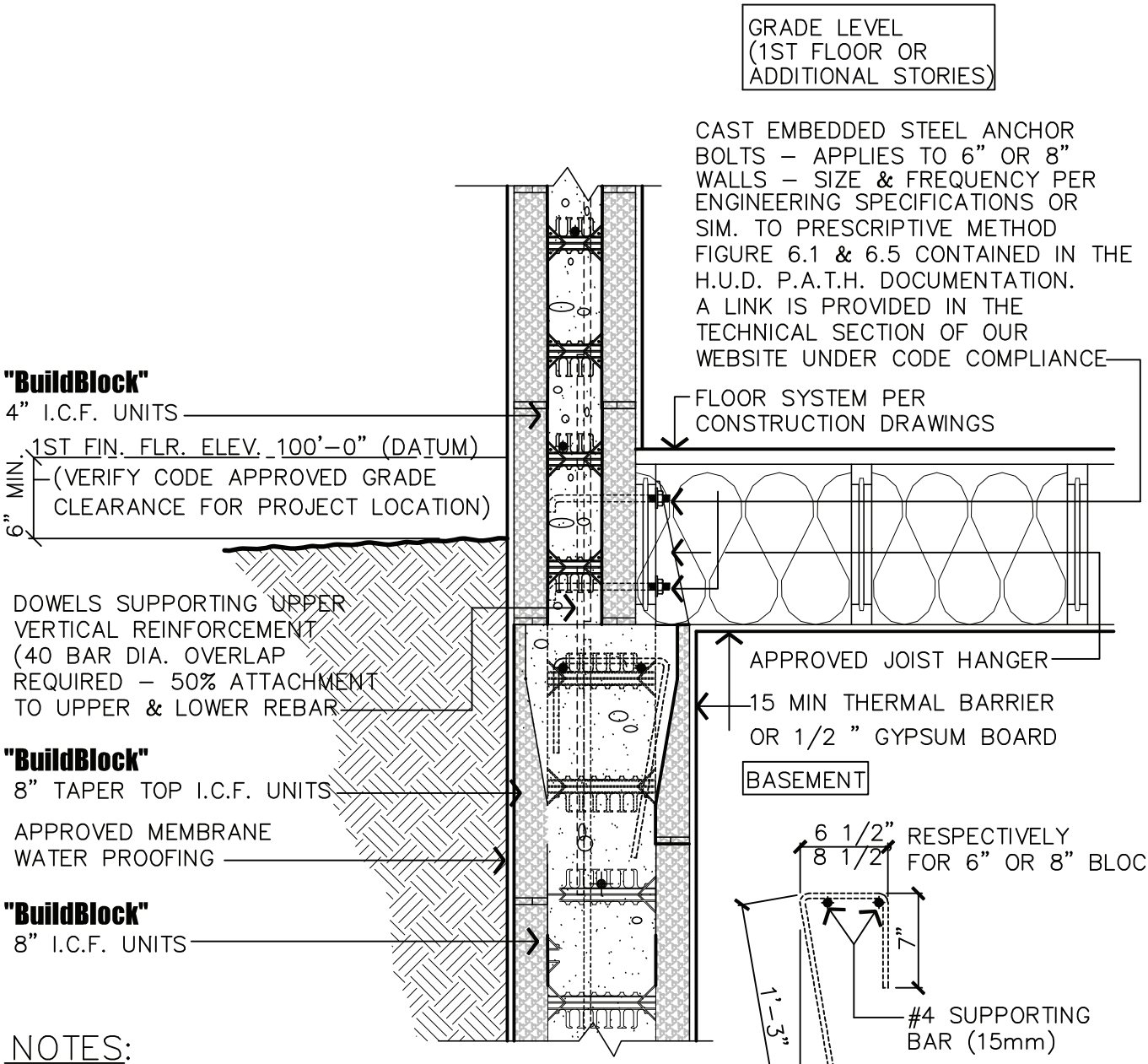

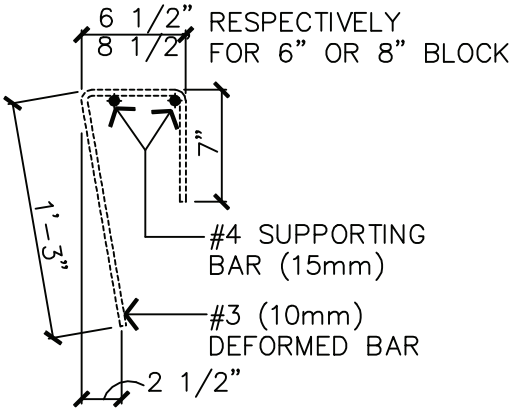

2/54 STIRRUP DETAIL
SCALE: 1" = 1'–0"

NOTES:

1. VARIATIONS IN IMPOSOSED LIVE & DEAD LOADS AND OTHER APPLICATION SPECIFIC VARIABLES REQUIRE ALL ASPECTS OF THE DETAILS SHOWN HERE TO BE DESIGNED AND /OR APPROVED BY A QUALIFIED ENGINEER
2. ALL CONSTRUCTION SHALL BE IN ACCORDANCE W/ THE SPECIFICATION OF AND THE RESPONSIBILITY OF A QUALIFIED STRUCTRURAL ENGINEER.

1/54 CROSS SECTION DETAIL
SCALE: 1" = 1'–0"

STIRRUP SPACING:

1. VENEER – 1000 lb/ft (15kN/m @ 18" (450mm)
2. VENEER – 1500 lb/ft (22kN/m @ 12" (300mm)

NOTE:

DUE TO VARIATIONS IN SELECTED PRINTER SETTINGS, NOTED SCALES MAY NO LONGER BE APPLICABLE

BuildBlock BUILDING SYSTEMS

9705 N. BROADWAY EXTENSION, SUITE 200, OKLAHOMA CITY, OK 73114
OFFICE: 405-840-3386 | TOLL FREE: 866-222-2575 | FAX: 831-597-0792
BUILDBLOCK.COM

TAPER UNIT & LEDGE CONNECTION 2

DATE/REV	10-05-07 /2	SCALE	NTS	DETAIL SHEET
NOTES				54

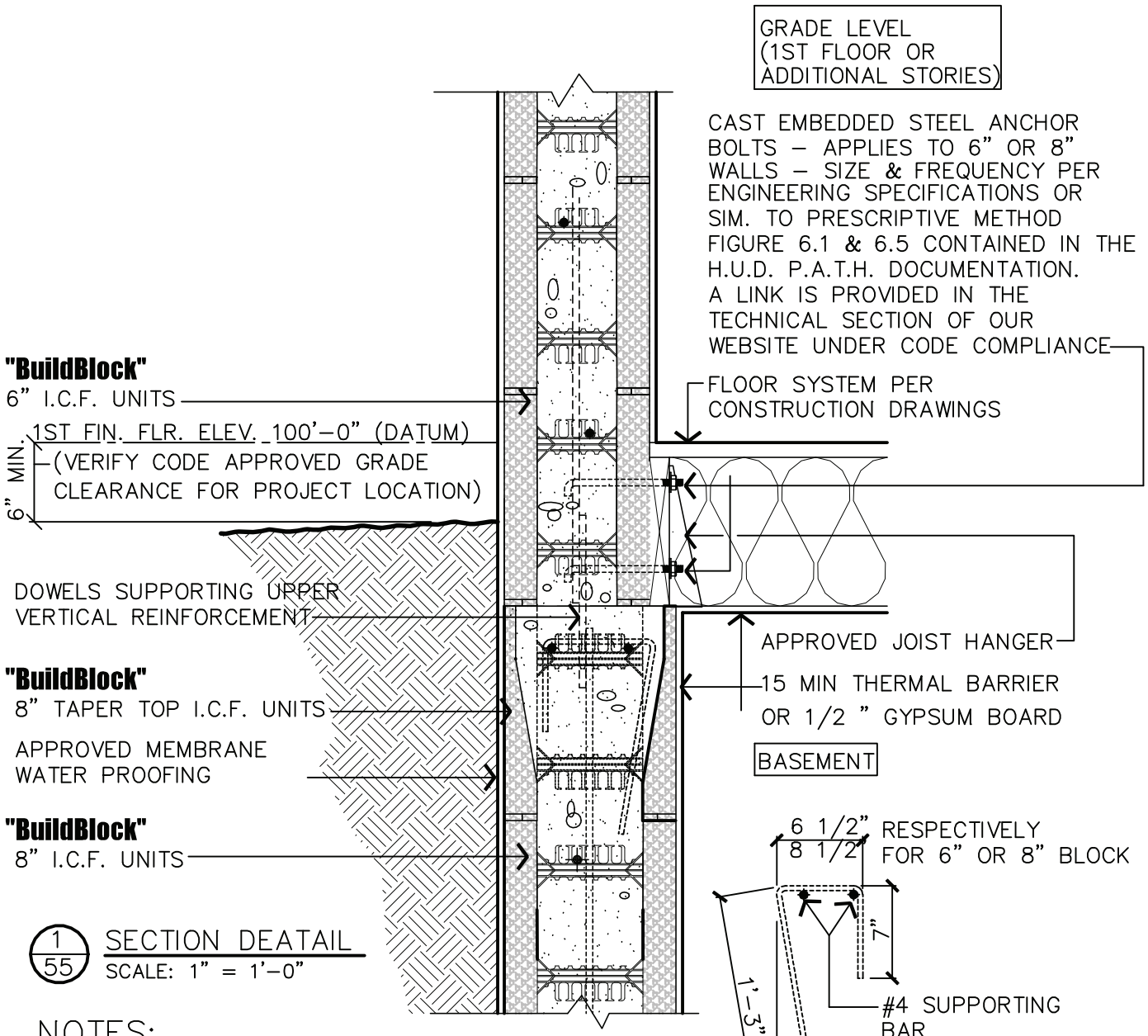

1/55 SECTION DEATAIL
SCALE: 1" = 1'–0"

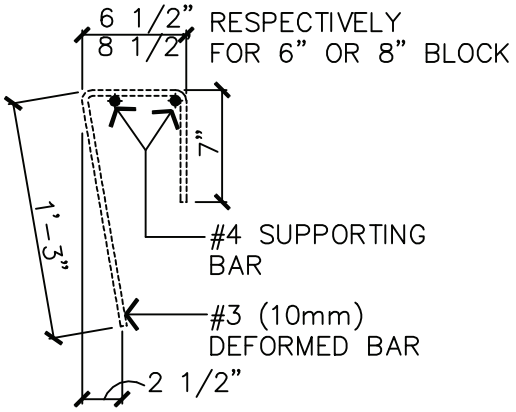

2/55 STIRRUP DETAIL
SCALE: 1" = 1'–0"

NOTES:

1. VARIATIONS IN IMPOSOSED LIVE & DEAD LOADS AND OTHER APPLICATION SPECIFIC VARIABLES REQUIRE ALL ASPECTS OF THE DETAILS SHOWN HERE TO BE DESIGNED AND /OR APPROVED BY A QUALIFIED ENGINEER
2. ALL CONSTRUCTION SHALL BE IN ACCORDANCE W/ THE SPECIFICATION OF AND THE RESPONSIBILITY OF A QUALIFIED STRUCTRURAL ENGINEER.

MINIMUM SPACING:

1. VENEER – 1000 lb/ft (15kN/m @ 18" (450mm)
2. VENEER – 1500 lb/ft (22kN/m @ 12" (300mm)

NOTE:
DUE TO VARIATIONS IN SELECTED PRINTER SETTINGS, NOTED SCALES MAY NO LONGER BE APPLICABLE

BuildBlock® BUILDING SYSTEMS

9705 N. BROADWAY EXTENSION, SUITE 200, OKLAHOMA CITY, OK 73114
OFFICE: 405-840-3386 | TOLL FREE: 866-222-2575 | FAX: 831-597-0792
BUILDBLOCK.COM

TAPER UNIT & LEDGE CONNECTION 3

DATE/REV	09-30-07 /2	SCALE	NTS	DETAIL SHEET
NOTES				55

CONSTRUCTION SHALL BE IN ACCORDANCE WITH ALL APPLICABLE LOCAL AND NATIONAL CODES. ALL DRAWINGS ARE SUBJECT TO CHANGE WITHOUT NOTICE.

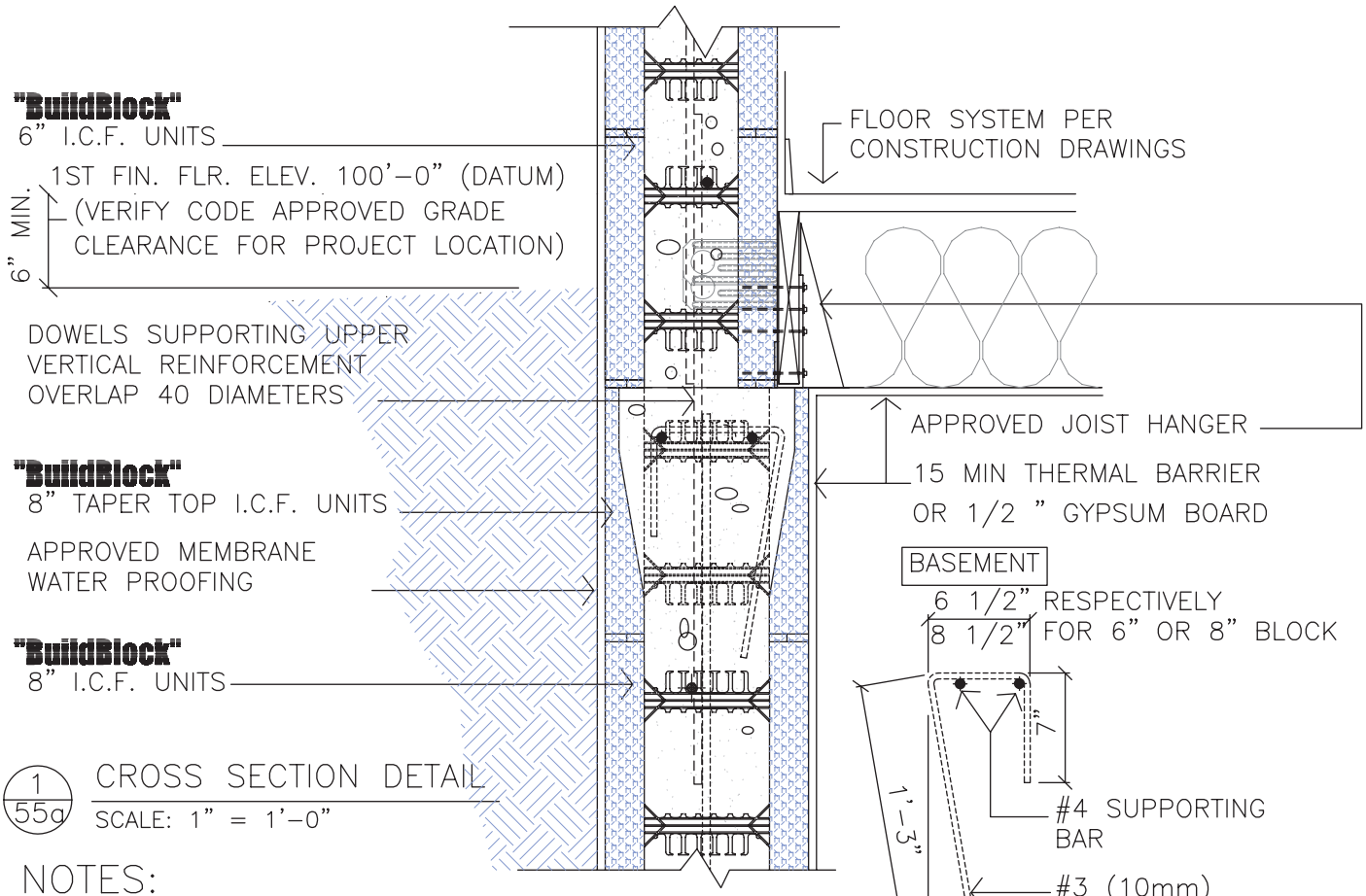

1 / 55a CROSS SECTION DETAIL
SCALE: 1" = 1'-0"

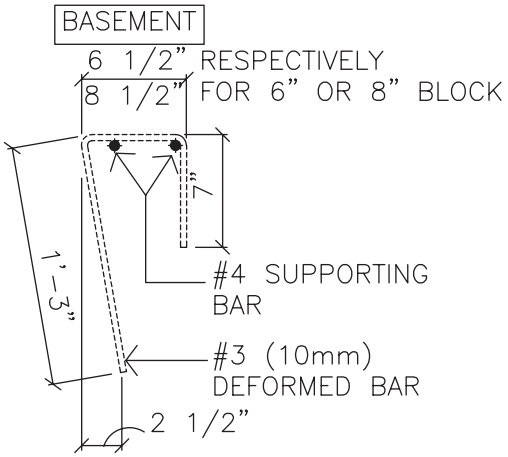

2 / 55a STIRRUP DETAIL
SCALE: 1" = 1'-0"

MINIMUM SPACING:
1. VENEER – 1000 lb/ft (15kN/m @ 18" (450mm)
2. VENEER – 1500 lb/ft (22kN/m @ 12" (300mm)

NOTES:

1. VARIATIONS IN IMPOSOSED LIVE & DEAD LOADS AND OTHER APPLICATION SPECIFIC VARIABLES REQUIRE ALL ASPECTS OF THE DETAILS SHOWN HERE TO BE DESIGNED AND /OR APPROVED BY A QUALIFIED ENGINEER
2. ALL CONSTRUCTION SHALL BE IN ACCORDANCE W/ THE SPECIFICATION OF AND THE RESPONSIBILITY OF A QUALIFIED STRUCTURAL ENGINEER.

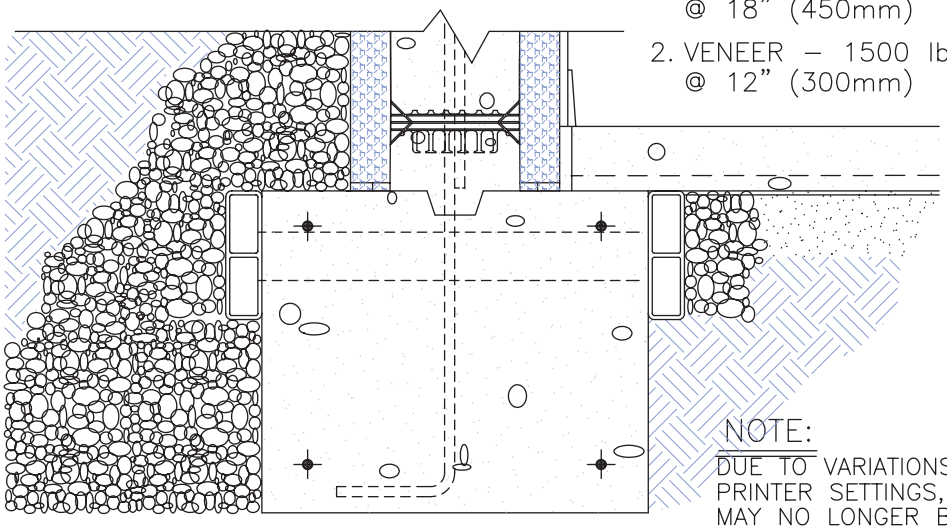

1 / 20 BASEMENT FOUNDATION

NOTE:
DUE TO VARIATIONS IN SELECTED PRINTER SETTINGS, NOTED SCALES MAY NO LONGER BE APPLICABLE

BuildBlock® BUILDING SYSTEMS

9705 N. BROADWAY EXTENSION, SUITE 200, OKLAHOMA CITY, OK 73114
OFFICE: 405-840-3386 | TOLL FREE: 866-222-2575 | FAX: 831-597-0792
BUILDBLOCK.COM

BASEMENT W/ BUILDBLOCK ABOVE & SIDE BEARING FLOOR W/ TAPERTOP

DATE/REV	11-17-09	SCALE	NTS	DETAIL SHEET
NOTES				55A

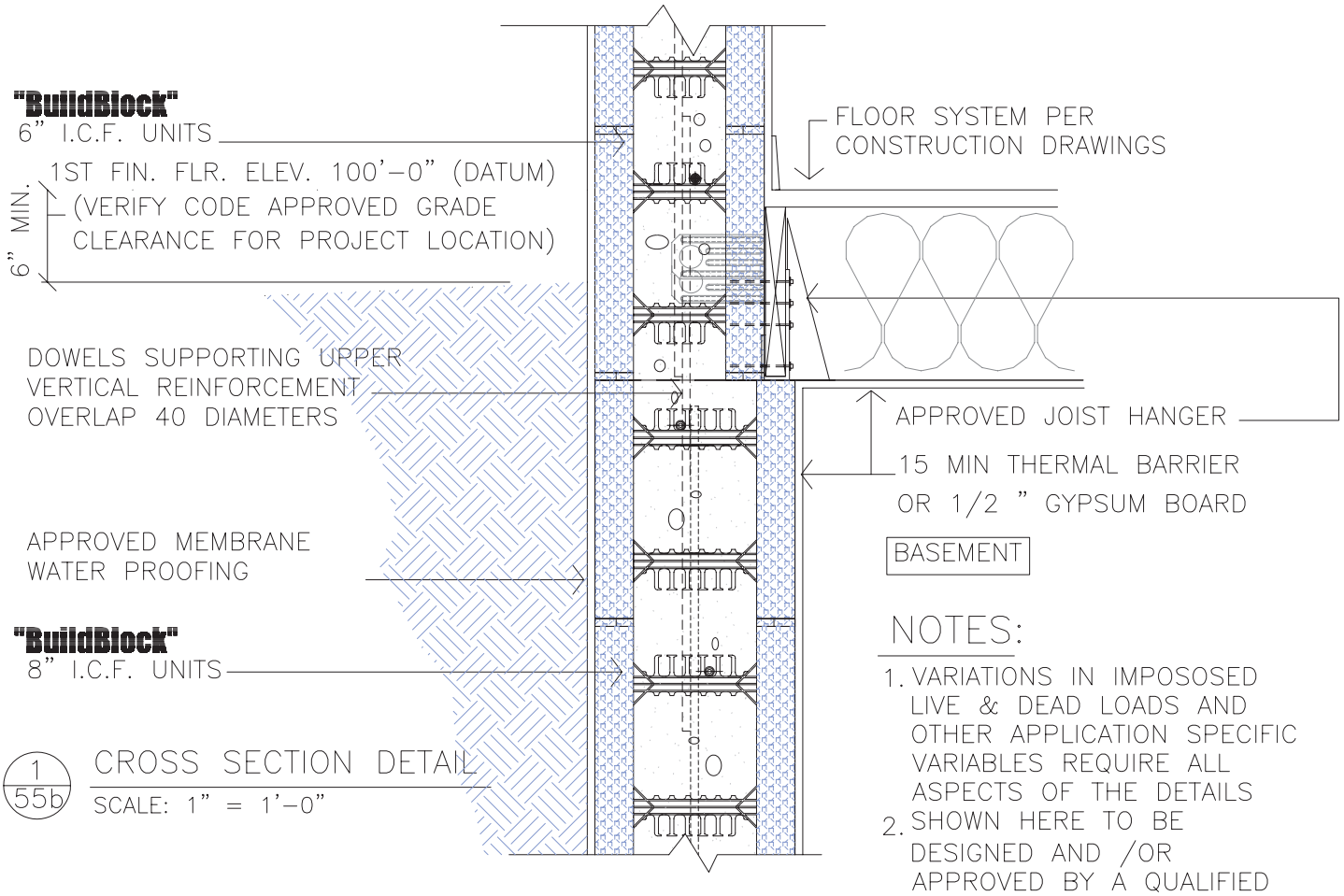

1/55b CROSS SECTION DETAIL

SCALE: 1" = 1'-0"

NOTES:

1. VARIATIONS IN IMPOSOSED LIVE & DEAD LOADS AND OTHER APPLICATION SPECIFIC VARIABLES REQUIRE ALL ASPECTS OF THE DETAILS
2. SHOWN HERE TO BE DESIGNED AND /OR APPROVED BY A QUALIFIED ENGINEER
   ALL CONSTRUCTION SHALL BE IN ACCORDANCE W/ THE SPECIFICATION OF AND THE RESPONSIBILITY OF A QUALIFIED STRUCTURAL ENGINEER.

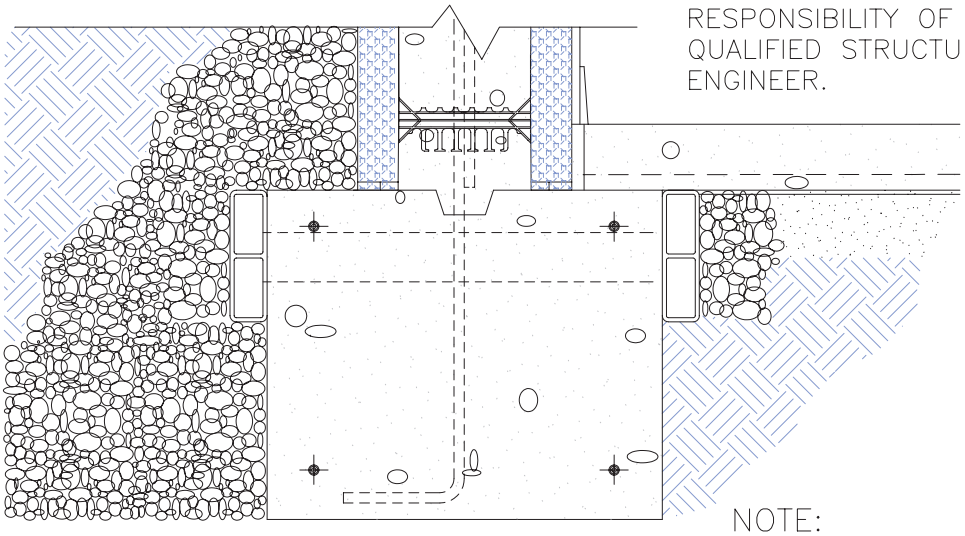

1/20 BASEMENT FOUNDATION

NOTE:

DUE TO VARIATIONS IN SELECTED PRINTER SETTINGS, NOTED SCALES MAY NO LONGER BE APPLICABLE

BuildBlock® BUILDING SYSTEMS

9705 N. BROADWAY EXTENSION, SUITE 200, OKLAHOMA CITY, OK 73114
OFFICE: 405-840-3386 | TOLL FREE: 866-222-2575 | FAX: 831-597-0792
BUILDBLOCK.COM

BASEMENT W/ BUILDBLOCK ABOVE & SIDE BEARING FLOOR

DATE/REV	11-17-09	SCALE	NTS	DETAIL SHEET
NOTES				55B

CONSTRUCTION SHALL BE IN ACCORDANCE WITH ALL APPLICABLE LOCAL AND NATIONAL CODES. ALL DRAWINGS ARE SUBJECT TO CHANGE WITHOUT NOTICE.

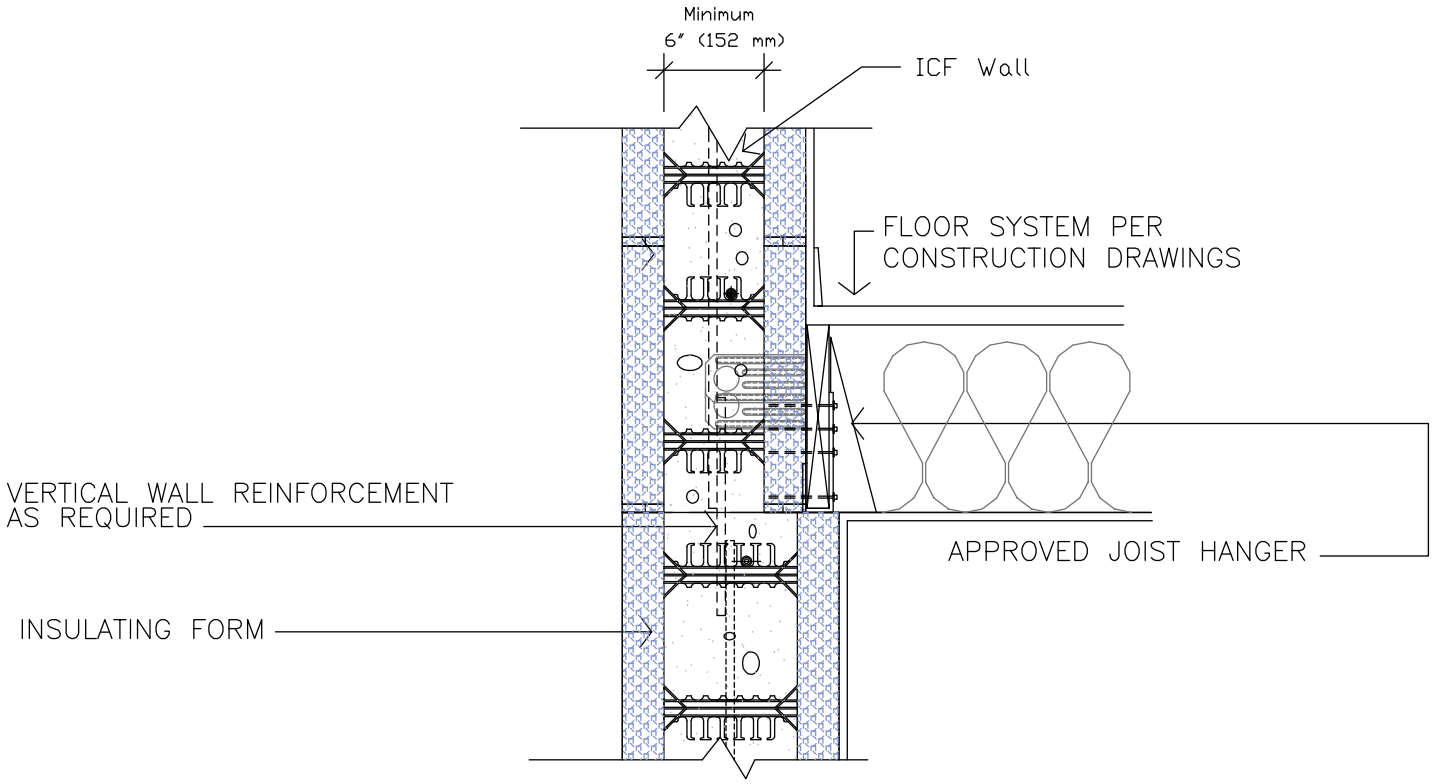

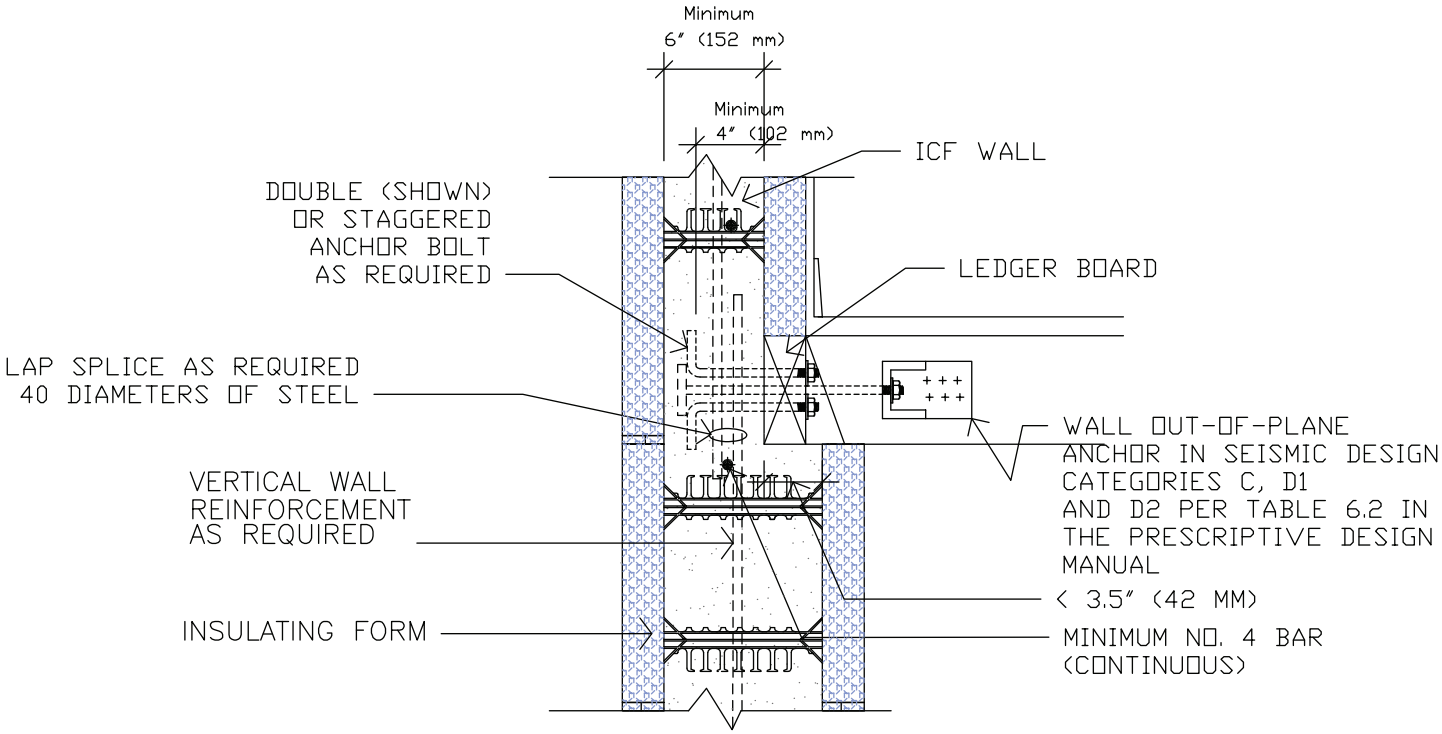

BuildBlock® BUILDING SYSTEMS

FLOOR ICF WALL CONNECTION IN SEISMIC ZONE D & TOWNHOUSE ZONE C. ICF. ABOVE

DATE/REV	11-17-09	SCALE	NTS	DETAIL SHEET
NOTES				55C

9705 N. BROADWAY EXTENSION, SUITE 200, OKLAHOMA CITY, OK 73114
OFFICE: 405-840-3386 | TOLL FREE: 866-222-2575 | FAX: 831-597-0792
BUILDBLOCK.COM

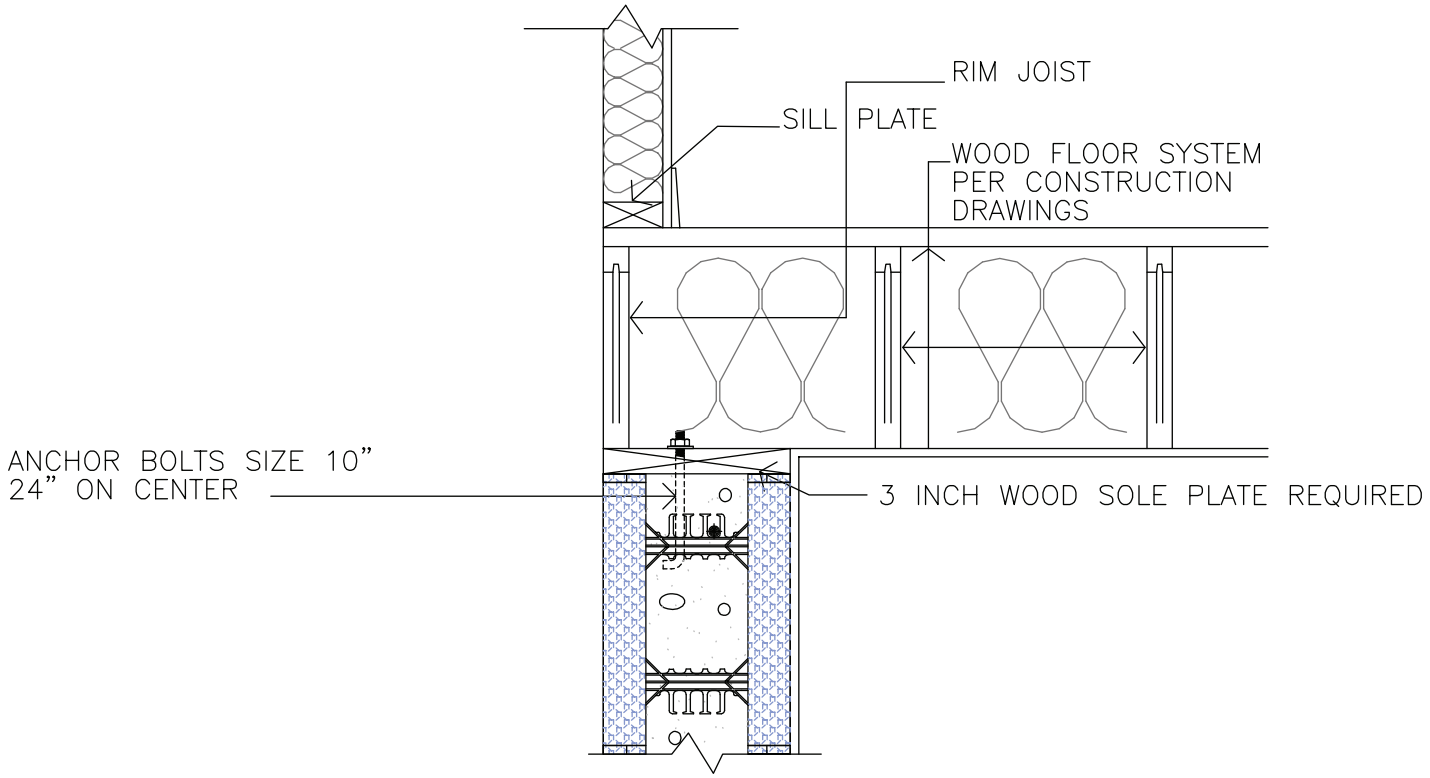

BuildBlock® BUILDING SYSTEMS

FLOOR ICF WALL CONNECTION IN SEISMIC ZONE D & TOWNHOUSE ZONE C. FRAME ABOVE

DATE/REV	11-17-09	SCALE	NTS	DETAIL SHEET
NOTES				55D

9705 N. BROADWAY EXTENSION, SUITE 200, OKLAHOMA CITY, OK 73114
OFFICE: 405-840-3386 | TOLL FREE: 866-222-2575 | FAX: 831-597-0792
BUILDBLOCK.COM

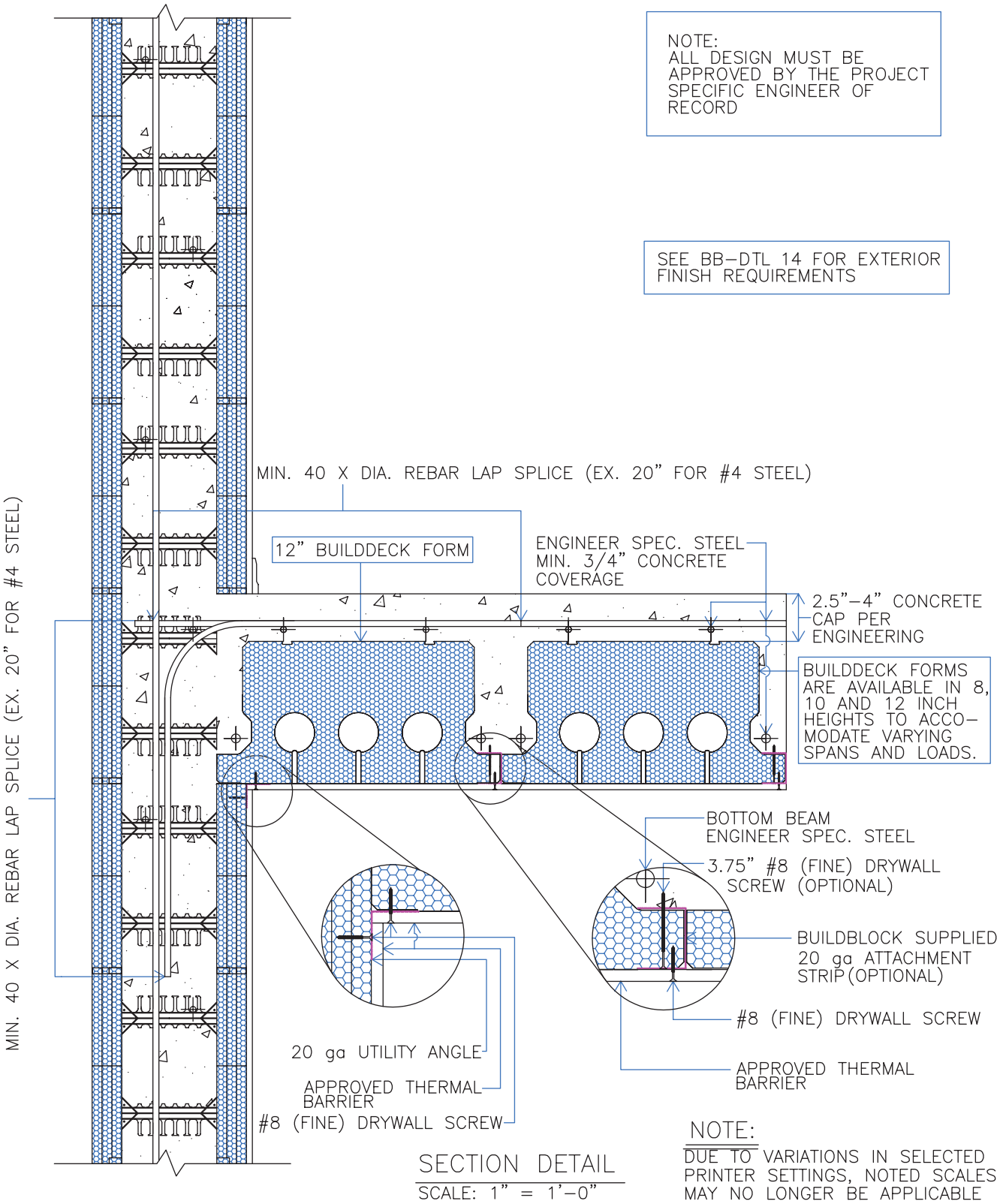

SECTION DETAIL
SCALE: 1" = 1'–0"

NOTE:
DUE TO VARIATIONS IN SELECTED PRINTER SETTINGS, NOTED SCALES MAY NO LONGER BE APPLICABLE

BuildBlock® BUILDING SYSTEMS

9705 N. BROADWAY EXTENSION, SUITE 200, OKLAHOMA CITY, OK 73114
OFFICE: 405-840-3386 | TOLL FREE: 866-222-2575 | FAX: 831-597-0792
BUILDBLOCK.COM

BUILDDECK FLOOR & WALL TOP BEARING

DATE/REV	11-19-09	SCALE	NTS	DETAIL SHEET
NOTES				56

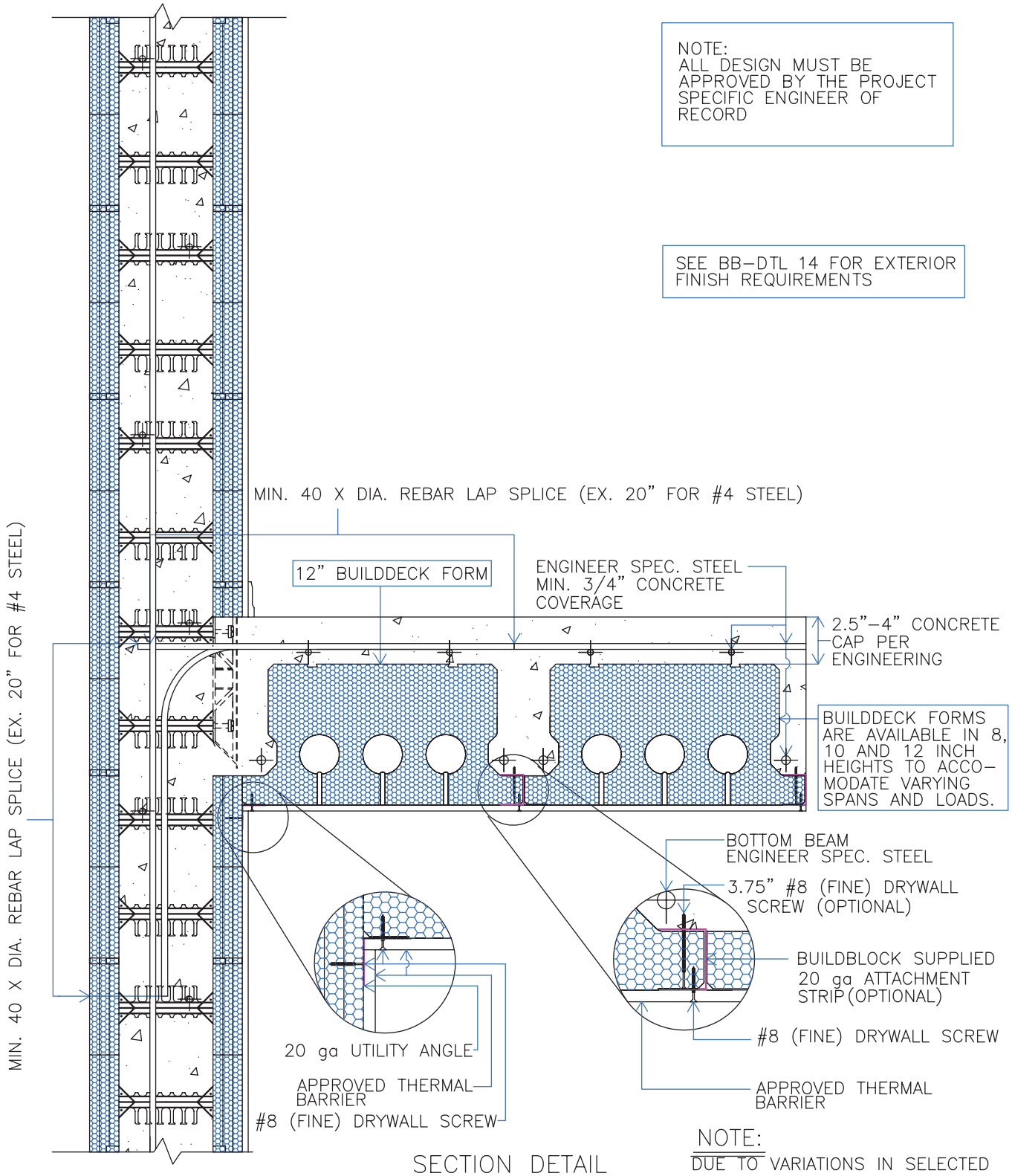

SECTION DETAIL
SCALE: 1" = 1'–0"

NOTE:
DUE TO VARIATIONS IN SELECTED PRINTER SETTINGS, NOTED SCALES MAY NO LONGER BE APPLICABLE

BuildBlock® BUILDING SYSTEMS

9705 N. BROADWAY EXTENSION, SUITE 200, OKLAHOMA CITY, OK 73114
OFFICE: 405-840-3386 | TOLL FREE: 866-222-2575 | FAX: 831-597-0792
BUILDBLOCK.COM

BUILDDECK FLOOR INTERSECTION

DATE/REV	11-19-09	SCALE	NTS	DETAIL SHEET
NOTES				57

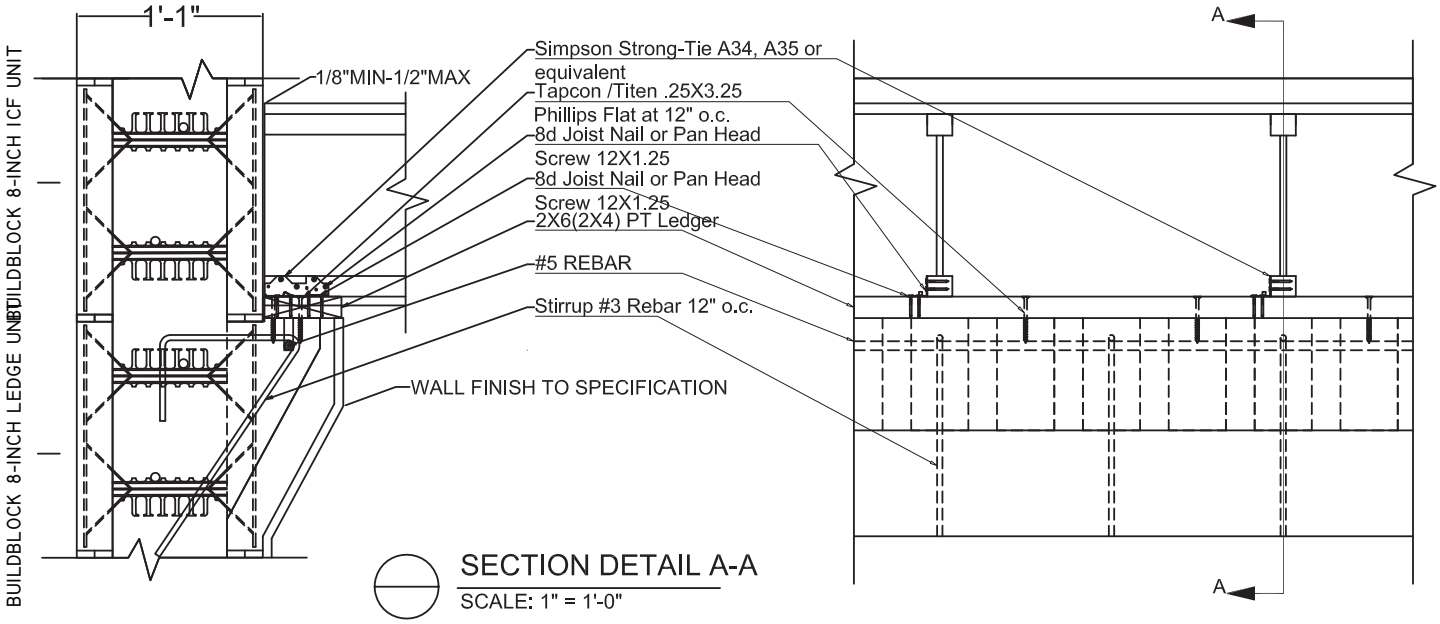

SECTION DETAIL A-A
SCALE: 1" = 1'-0"

NOTE:
ENSURE THAT ALL REBAR STIRRUPS ARE ADEQUATELY MARKED PRIOR TO POUR. THIS WILL ELIMINATE INTERFERENCE WITH TAPCON/TITEN SCREWS.

ALLOWABLE LIVE LOAD TABLE FOR LEDGER BLOCK WITH WOOD FLOOR SYSTEM DEAD LOAD		
TOTAL SERVICE LOAD = 1.20 kips/ft. of ICF WALL		
DEAD LOAD = 25psf (WOOD FLOOR SYSTEM)		
FLOOR SPAN (feet)		ALLOWABLE LIVE LOAD (psf)
18		108
20		95
22		84
24		75
26		67
28		61
30		55
32		50
34		46
36		42
38		38

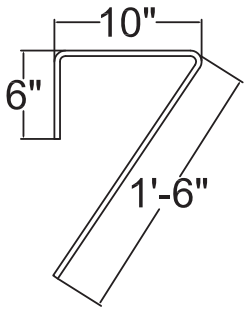


SST A34


SST A35

NOTE:
ALL BENDS PER ANSI & STEEL INSTITUTE STANDARDS
- STEEL GRADES AS SPECIFIED
- DIMENSIONS TYPICAL FOR ALL LEDGE BLOCK APPLICATIONS

STIRRUP DETAIL
SCALE: NTS

NOTES:
1. USE OF EITHER 2X4 OR 2X6 (PICTURED) PRESSURE TREATED LUMBER IS ACCEPTABLE. INFERIOR FINISH AT CEILING JOINT MAY BE DRYWALL OR WOOD TRIM TO CONCEAL LEDGER BOARD.
2. SCREWS OR JOIST NAILS MAY BE USED FOR ATTACHING JOIST ANGLE BRACKET TO LEDGER PLATE. SEE HANGER MANUFACTURERS RECOMMENDATIONS FOR FASTENERS.

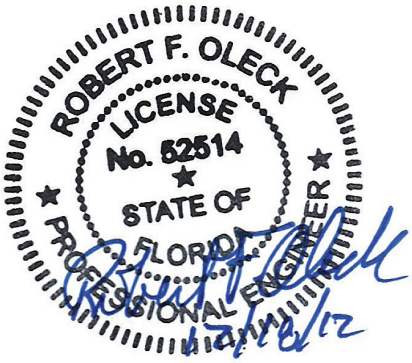

NOTE:
DUE TO VARIATIONS IN SELECTED PRINTER SETTINGS, NOTED SCALES MAY NO LONGER BE APPLICABLE.

BuildBlock BUILDING SYSTEMS
9705 N. BROADWAY EXTENSION, SUITE 200, OKLAHOMA CITY, OK 73114
OFFICE: 405-840-3386 | TOLL FREE: 866-222-2575 | FAX: 831-597-0792
BUILDBLOCK.COM

BRICKLEDGE 8" LEDGE BLOCK BB-8BL TO BUILDBLOCK BB-800

DATE/REV	11/2012	SCALE	NTS	DETAIL SHEET
NOTES				58A

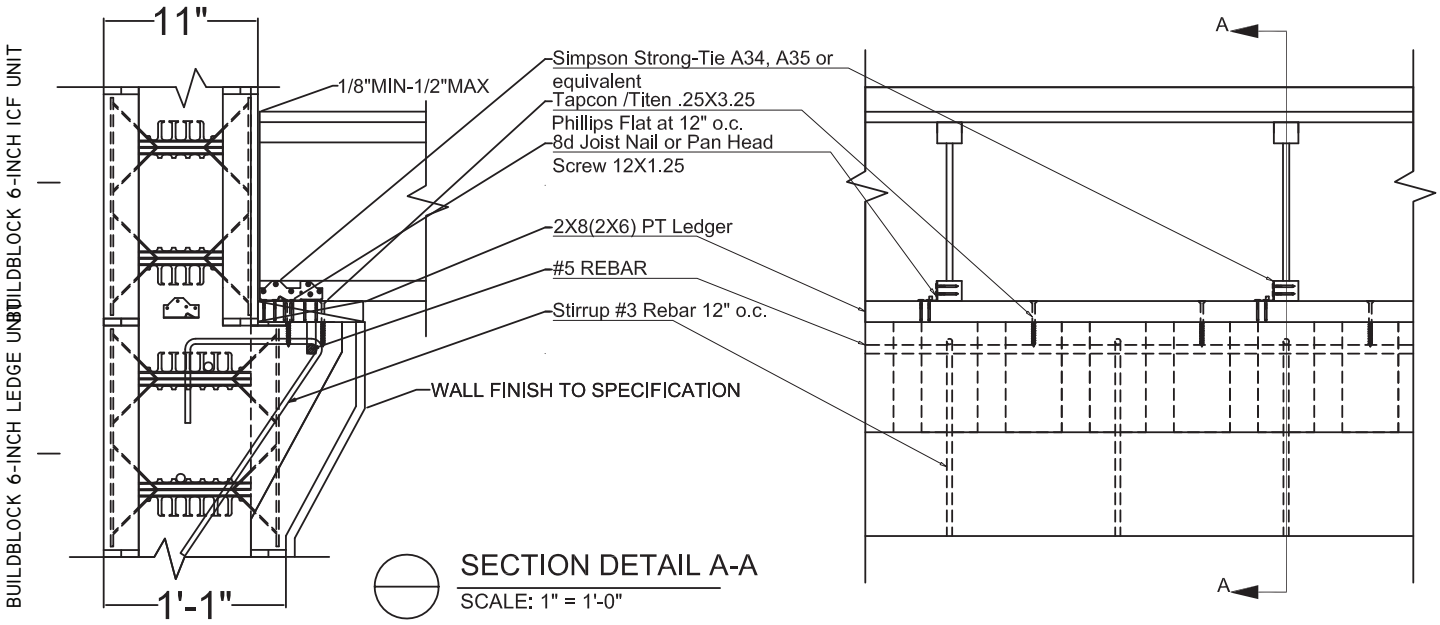

SECTION DETAIL A-A
SCALE: 1" = 1'-0"

NOTE:
ENSURE THAT ALL REBAR STIRRUPS ARE ADEQUATELY MARKED PRIOR TO POUR. THIS WILL ELIMINATE INTERFERENCE WITH TAPCON/TITEN SCREWS.

ALLOWABLE LIVE LOAD TABLE FOR LEDGER BLOCK WITH WOOD FLOOR SYSTEM DEAD LOAD		
TOTAL SERVICE LOAD = 1.20 kips/ft. of ICF WALL		
DEAD LOAD = 25psf (WOOD FLOOR SYSTEM)		
FLOOR SPAN (feet)		ALLOWABLE LIVE LOAD (psf)
18		108
20		95
22		84
24		75
26		67
28		61
30		55
32		50
34		46
36		42
38		38

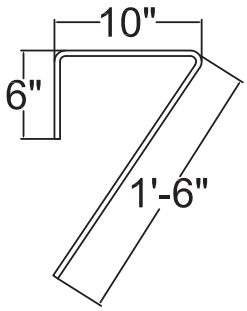


SST A34


SST A35

NOTE:
ALL BENDS PER ANSI & STEEL INSTITUTE STANDARDS
- STEEL GRADES AS SPECIFIED
- DIMENSIONS TYPICAL FOR ALL LEDGE BLOCK APPLICATIONS

STIRRUP DETAIL
SCALE: NTS

NOTES:
1. USE OF EITHER 2X4 OR 2X6 (PICTURED) PRESSURE TREATED LUMBER IS ACCEPTABLE. INFERIOR FINISH AT CEILING JOINT MAY BE DRYWALL OR WOOD TRIM TO CONCEAL LEDGER BOARD.
2. SCREWS OR JOIST NAILS MAY BE USED FOR ATTACHING JOIST ANGLE BRACKET TO LEDGER PLATE. SEE HANGER MANUFACTURERS RECOMMENDATIONS FOR FASTENERS.

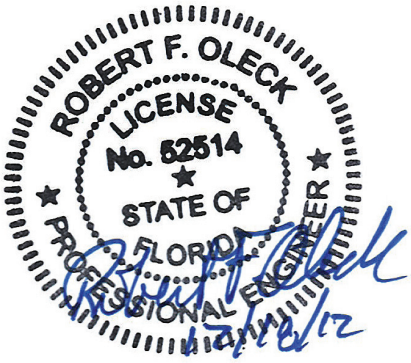

NOTE:
DUE TO VARIATIONS IN SELECTED PRINTER SETTINGS, NOTED SCALES MAY NO LONGER BE APPLICABLE.

BuildBlock BUILDING SYSTEMS
9705 N. BROADWAY EXTENSION, SUITE 200, OKLAHOMA CITY, OK 73114
OFFICE: 405-840-3386 | TOLL FREE: 866-222-2575 | FAX: 831-597-0792
BUILDBLOCK.COM

BRICKLEDGE 8" LEDGE BLOCK BB-8BL TO BUILDBLOCK BB-600

DATE/REV	11/2012	SCALE	NTS	DETAIL SHEET
NOTES				58B

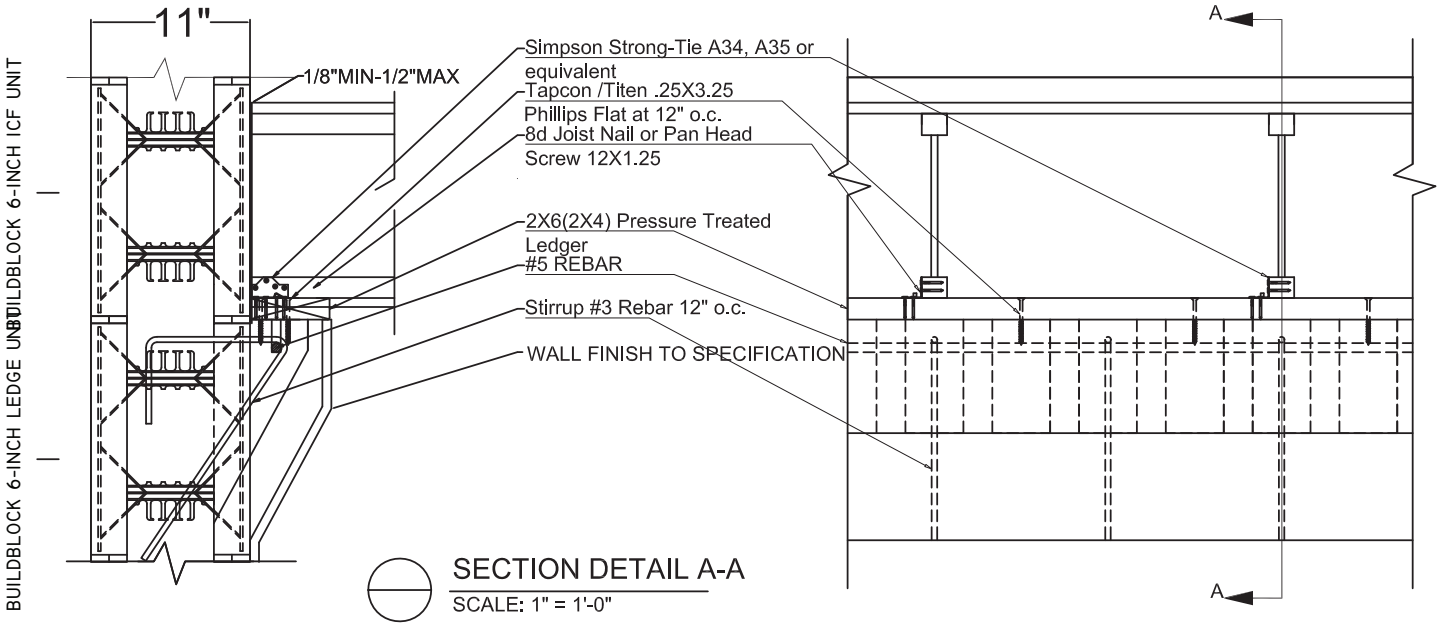

SECTION DETAIL A-A
SCALE: 1" = 1'-0"

NOTE:
ENSURE THAT ALL REBAR STIRRUPS ARE ADEQUATELY MARKED PRIOR TO POUR. THIS WILL ELIMINATE INTERFERENCE WITH TAPCON/TITEN SCREWS.

ALLOWABLE LIVE LOAD TABLE FOR LEDGER BLOCK WITH WOOD FLOOR SYSTEM DEAD LOAD		
TOTAL SERVICE LOAD = 1.20 kips/ft. of ICF WALL		
DEAD LOAD = 25psf (WOOD FLOOR SYSTEM)		
FLOOR SPAN (feet)		ALLOWABLE LIVE LOAD (psf)
18		108
20		95
22		84
24		75
26		67
28		61
30		55
32		50
34		46
36		42
38		38

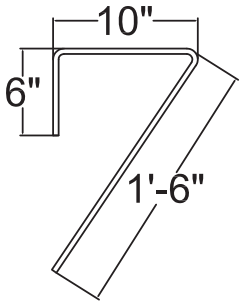

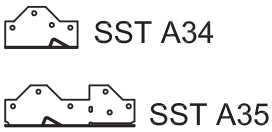

NOTE:
ALL BENDS PER ANSI & STEEL INSTITUTE STANDARDS
- STEEL GRADES AS SPECIFIED
- DIMENSIONS TYPICAL FOR ALL LEDGE BLOCK APPLICATIONS

STIRRUP DETAIL
SCALE: NTS

NOTES:
1. USE OF EITHER 2X4 OR 2X6 (PICTURED) PRESSURE TREATED LUMBER IS ACCEPTABLE. INFERIOR FINISH AT CEILING JOINT MAY BE DRYWALL OR WOOD TRIM TO CONCEAL LEDGER BOARD.
2. SCREWS OR JOIST NAILS MAY BE USED FOR ATTACHING JOIST ANGLE BRACKET TO LEDGER PLATE. SEE HANGER MANUFACTURERS RECOMMENDATIONS FOR FASTENERS.

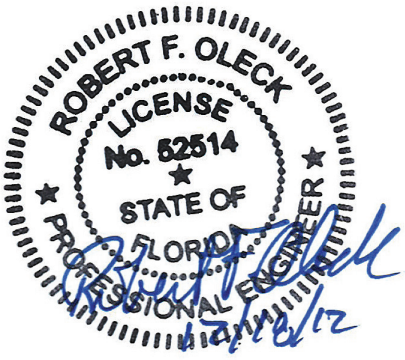

NOTE:
DUE TO VARIATIONS IN SELECTED PRINTER SETTINGS, NOTED SCALES MAY NO LONGER BE APPLICABLE.

BuildBlock BUILDING SYSTEMS
9705 N. BROADWAY EXTENSION, SUITE 200, OKLAHOMA CITY, OK 73114
OFFICE: 405-840-3386 | TOLL FREE: 866-222-2575 | FAX: 831-597-0792
BUILDBLOCK.COM

BRICKLEDGE 6" LEDGE BLOCK BB-8BL TO BUILDBLOCK BB-600

DATE/REV	11/2012	SCALE	NTS	DETAIL SHEET
NOTES				58C

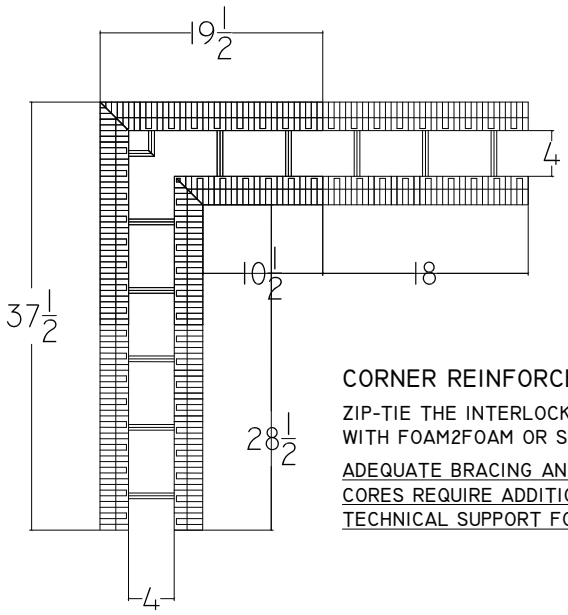

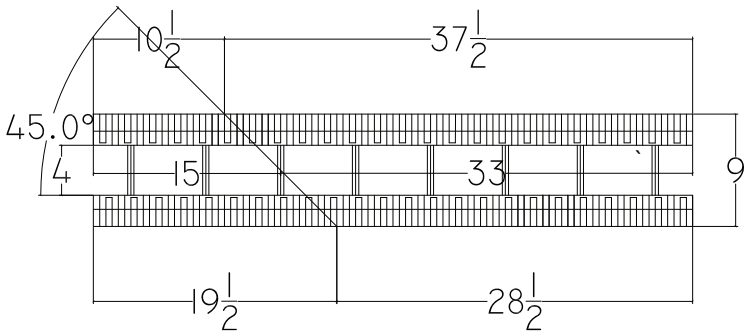

CORNER REINFORCEMENT

ZIP-TIE THE INTERLOCKING NUBS TOGETHER TO REINFORCE THE CORNER. BOND THE CUT EDGES TOGETHER WITH FOAM2FOAM OR SIMILAR LOW EXPANDING FOAM ADHESIVE.

ADEQUATE BRACING AND STRAPPING IS REQUIRED FOR ALL FIELD FABRICATED CORNERS. LARGER BLOCK CORES REQUIRE ADDITIONAL BRACING AND STRAPPING ON OUTSIDE CORNER CUTS. CONTACT BUILDBLOCK TECHNICAL SUPPORT FOR MORE INFORMATION.

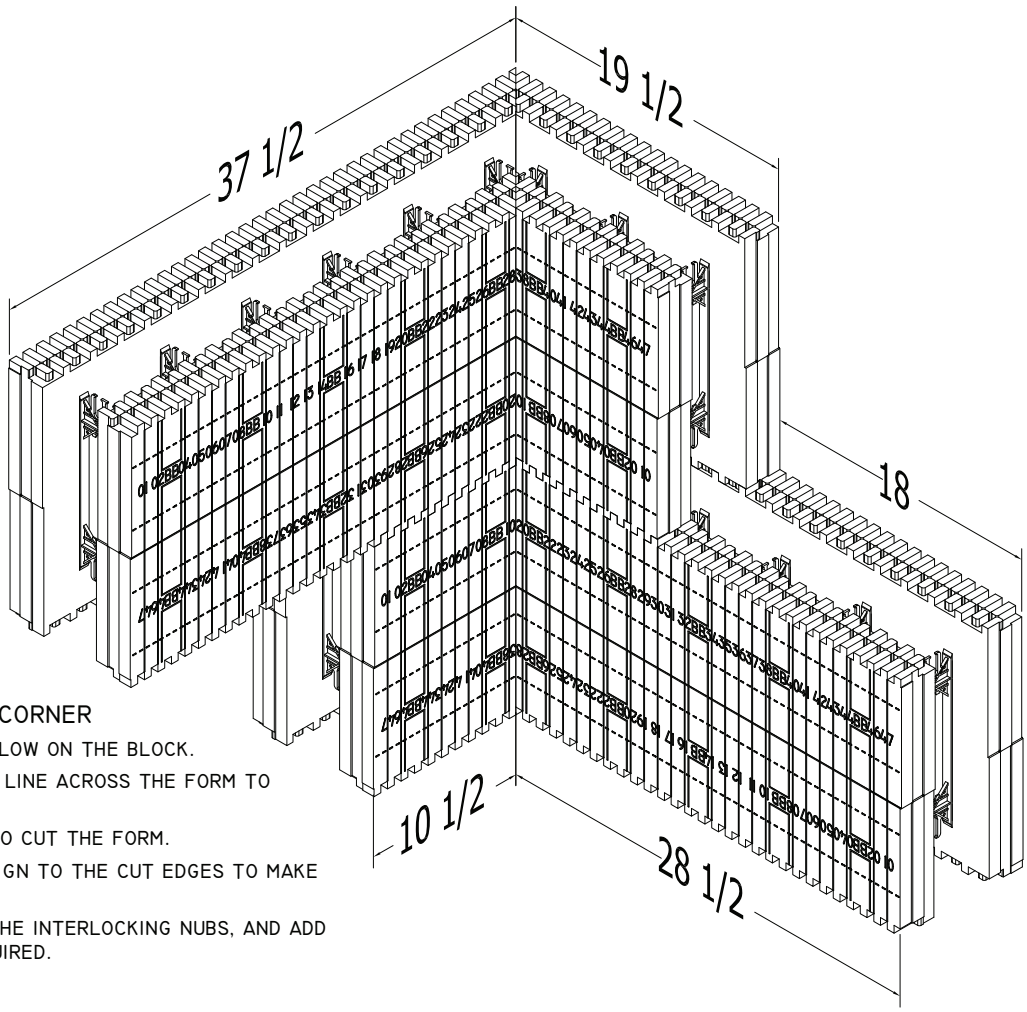

HOW TO FIELD FABRICATE A CORNER

1. MARK THE DIMENSIONS SHOWN BELOW ON THE BLOCK.
2. USING A STRAIGHT EDGE, DRAW A LINE ACROSS THE FORM TO SERVE AS A GUIDELINE.
3. USE A HOT KNIFE OR HAND SAW TO CUT THE FORM.
4. FLIP ONE OF THE HALVES AND ALIGN TO THE CUT EDGES TO MAKE THE MITERED CORNER.
5. FOAM GLUE THE EDGES, ZIP-TIE THE INTERLOCKING NUBS, AND ADD STRAPPING AND BRACING AS REQUIRED.

NOTE:

FIELD CUT CORNERS CAN BE EASILY MADE USING THESE DIMENSIONS. THE CUTS ARE DESIGNED TO ALLOW A SUFFICIENT RUNNING BOND FOR THE FORMS.

THESE DIMENSIONS DO NOT MATCH FACTORY CORNERS. CUTS SHOULD BE MADE WITH THE MOST ACCURATE SAW AVAILABLE. FIELD MITERS SHOULD BE REINFORCED WITH WOOD OR METAL STRAPPING AND BRACED ADEQUATELY. SEE THE BUILDBLOCK INSTALLATION & TECHNICAL MANUAL FOR MORE DETAIL ON STRAPPING AND BRACING.

BuildBlock® BUILDING SYSTEMS

9705 N. BROADWAY EXTENSION, SUITE 200, OKLAHOMA CITY, OK 73114
OFFICE: 405-840-3386 | TOLL FREE: 866-222-2575 | FAX: 831-597-0792
BUILDBLOCK.COM

BB-400/BL-400 90° FIELD FABRICATED CORNER

DATE/REV	8/2015	SCALE	NTS	DETAIL SHEET
NOTES				59A

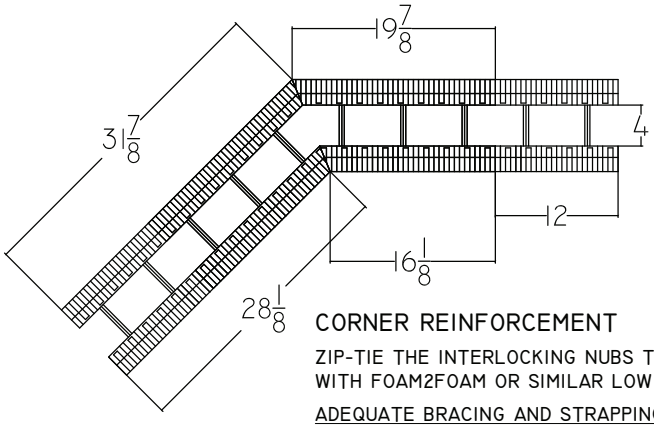

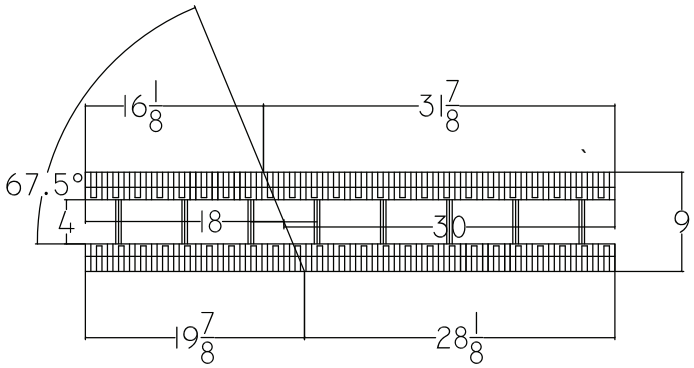

CORNER REINFORCEMENT

ZIP-TIE THE INTERLOCKING NUBS TOGETHER TO REINFORCE THE CORNER. BOND THE CUT EDGES TOGETHER WITH FOAM2FOAM OR SIMILAR LOW EXPANDING FOAM ADHESIVE.

ADEQUATE BRACING AND STRAPPING IS REQUIRED FOR ALL FIELD FABRICATED CORNERS. LARGER BLOCK CORES REQUIRE ADDITIONAL BRACING AND STRAPPING ON OUTSIDE CORNER CUTS. CONTACT BUILDBLOCK TECHNICAL SUPPORT FOR MORE INFORMATION.

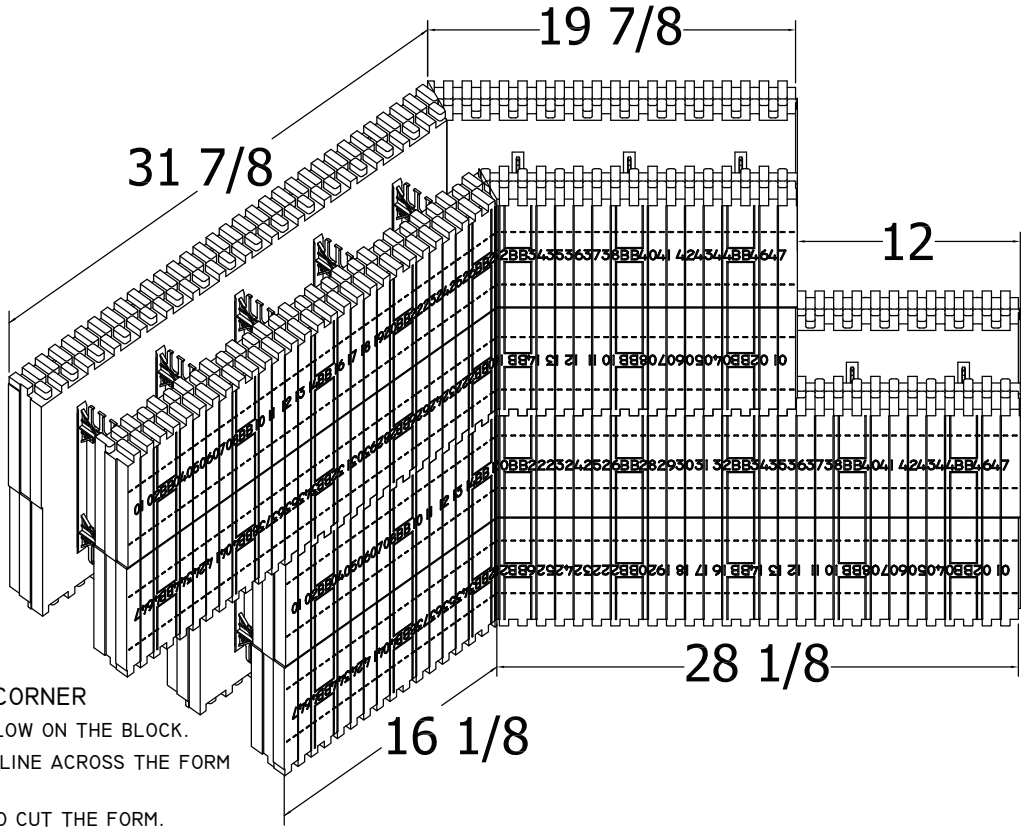

HOW TO FIELD FABRICATE A CORNER

1. MARK THE DIMENSIONS SHOWN BELOW ON THE BLOCK.
2. USING A STRAIGHT EDGE, DRAW A LINE ACROSS THE FORM TO SERVE AS A GUIDELINE.
3. USE A HOT KNIFE OR HAND SAW TO CUT THE FORM.
4. FLIP ONE OF THE HALVES AND ALIGN TO THE CUT EDGES TO MAKE THE MITERED CORNER.
5. FOAM GLUE THE EDGES, ZIP-TIE THE INTERLOCKING NUBS, AND ADD STRAPPING AND BRACING AS REQUIRED.

NOTE:

FIELD CUT CORNERS CAN BE EASILY MADE USING THESE DIMENSIONS. THE CUTS ARE DESIGNED TO ALLOW A SUFFICIENT RUNNING BOND FOR THE FORMS.

THESE DIMENSIONS DO NOT MATCH FACTORY CORNERS. CUTS SHOULD BE MADE WITH THE MOST ACCURATE SAW AVAILABLE. FIELD MITERS SHOULD BE REINFORCED WITH WOOD OR METAL STRAPPING AND BRACED ADEQUATELY. SEE THE BUILDBLOCK INSTALLATION & TECHNICAL MANUAL FOR MORE DETAIL ON STRAPPING AND BRACING.

BuildBlock® BUILDING SYSTEMS

9705 N. BROADWAY EXTENSION, SUITE 200, OKLAHOMA CITY, OK 73114
OFFICE: 405-840-3386 | TOLL FREE: 866-222-2575 | FAX: 831-597-0792
BUILDBLOCK.COM

BB-445/BL-445 45° FIELD FABRICATED CORNER

DATE/REV	8/2015	SCALE	NTS	DETAIL SHEET
NOTES				59B

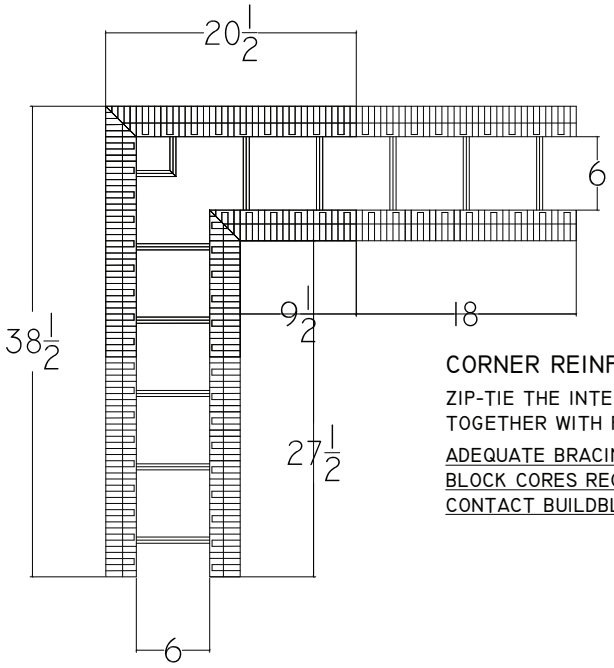

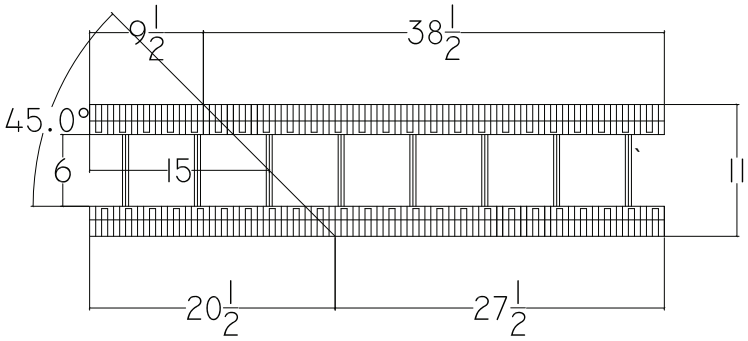

CORNER REINFORCEMENT

ZIP-TIE THE INTERLOCKING NUBS TOGETHER TO REINFORCE THE CORNER. BOND THE CUT EDGES TOGETHER WITH FOAM2FOAM OR SIMILAR LOW EXPANDING FOAM ADHESIVE.

ADEQUATE BRACING AND STRAPPING IS REQUIRED FOR ALL FIELD FABRICATED CORNERS. LARGER BLOCK CORES REQUIRE ADDITIONAL BRACING AND STRAPPING ON OUTSIDE CORNER CUTS. CONTACT BUILDBLOCK TECHNICAL SUPPORT FOR MORE INFORMATION.

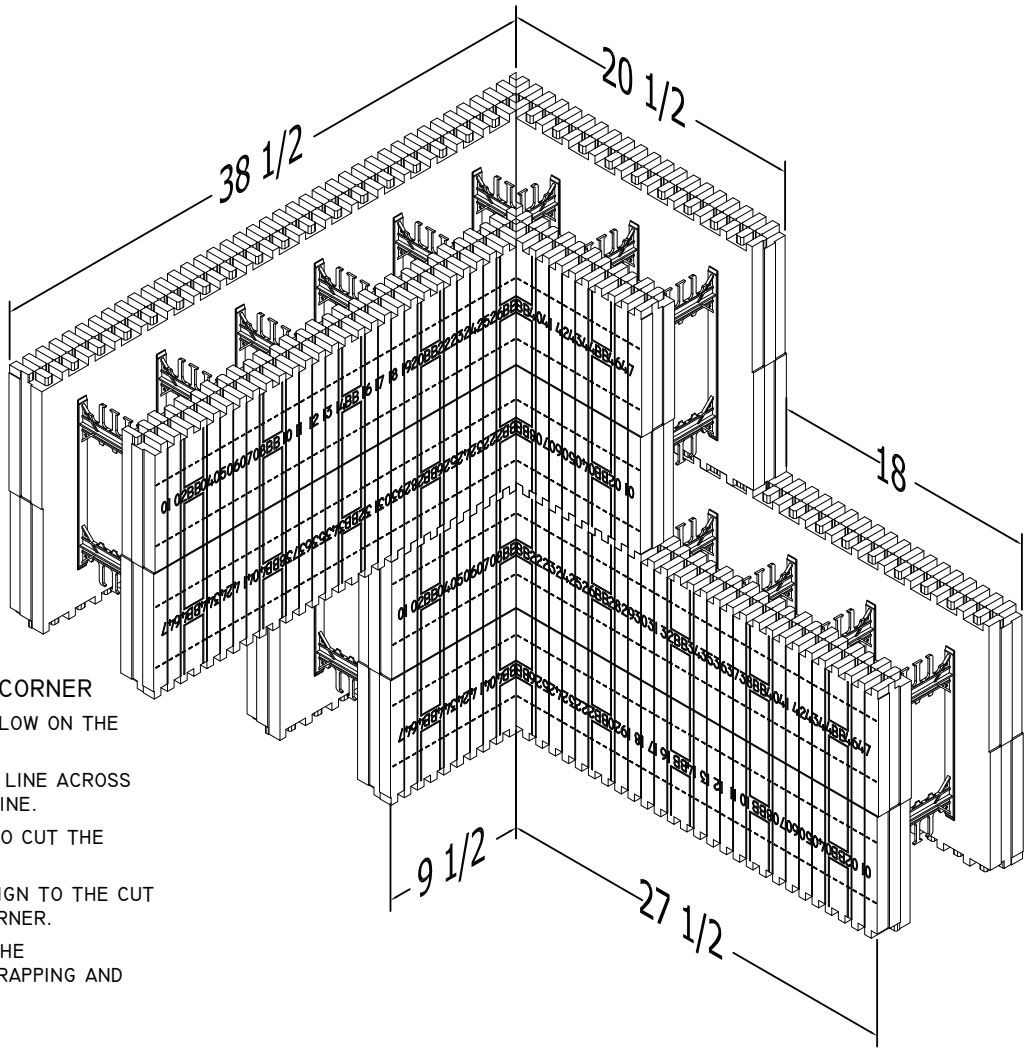

HOW TO FIELD FABRICATE A CORNER

1. MARK THE DIMENSIONS SHOWN BELOW ON THE BLOCK.
2. USING A STRAIGHT EDGE, DRAW A LINE ACROSS THE FORM TO SERVE AS A GUIDELINE.
3. USE A HOT KNIFE OR HAND SAW TO CUT THE FORM.
4. FLIP ONE OF THE HALVES AND ALIGN TO THE CUT EDGES TO MAKE THE MITERED CORNER.
5. FOAM GLUE THE EDGES, ZIP-TIE THE INTERLOCKING NUBS, AND ADD STRAPPING AND BRACING AS REQUIRED.

NOTE:

FIELD CUT CORNERS CAN BE EASILY MADE USING THESE DIMENSIONS. THE CUTS ARE DESIGNED TO ALLOW A SUFFICIENT RUNNING BOND FOR THE FORMS.

THESE DIMENSIONS DO NOT MATCH FACTORY CORNERS. CUTS SHOULD BE MADE WITH THE MOST ACCURATE SAW AVAILABLE. FIELD MITERS SHOULD BE REINFORCED WITH WOOD OR METAL STRAPPING AND BRACED ADEQUATELY. SEE THE BUILDBLOCK INSTALLATION & TECHNICAL MANUAL FOR MORE DETAIL ON STRAPPING AND BRACING.

BuildBlock® BUILDING SYSTEMS

9705 N. BROADWAY EXTENSION, SUITE 200, OKLAHOMA CITY, OK 73114
OFFICE: 405-840-3386 | TOLL FREE: 866-222-2575 | FAX: 831-597-0792
BUILDBLOCK.COM

BB-600/BL-600 90° FIELD FABRICATED CORNER

DATE/REV	8/2015	SCALE	NTS	DETAIL SHEET
NOTES				59C

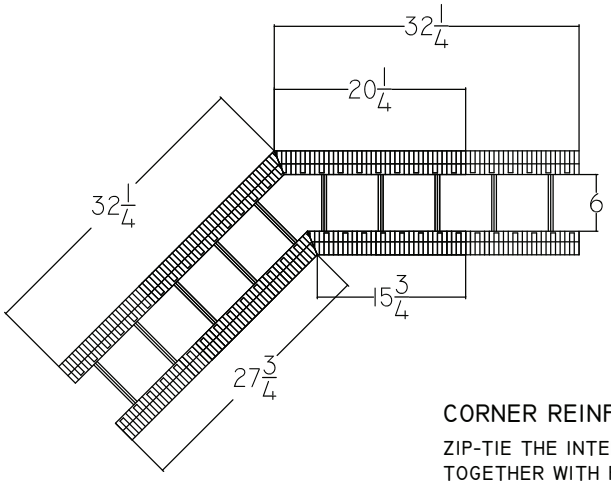

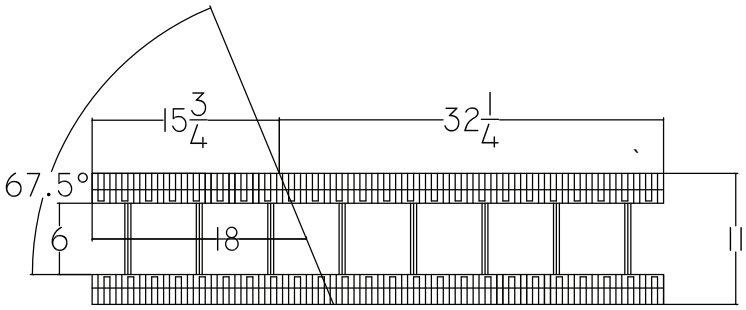

CORNER REINFORCEMENT

ZIP-TIE THE INTERLOCKING NUBS TOGETHER TO REINFORCE THE CORNER. BOND THE CUT EDGES TOGETHER WITH FOAM2FOAM OR SIMILAR LOW EXPANDING FOAM ADHESIVE.

ADEQUATE BRACING AND STRAPPING IS REQUIRED FOR ALL FIELD FABRICATED CORNERS. LARGER BLOCK CORES REQUIRE ADDITIONAL BRACING AND STRAPPING ON OUTSIDE CORNER CUTS. CONTACT BUILDBLOCK TECHNICAL SUPPORT FOR MORE INFORMATION.

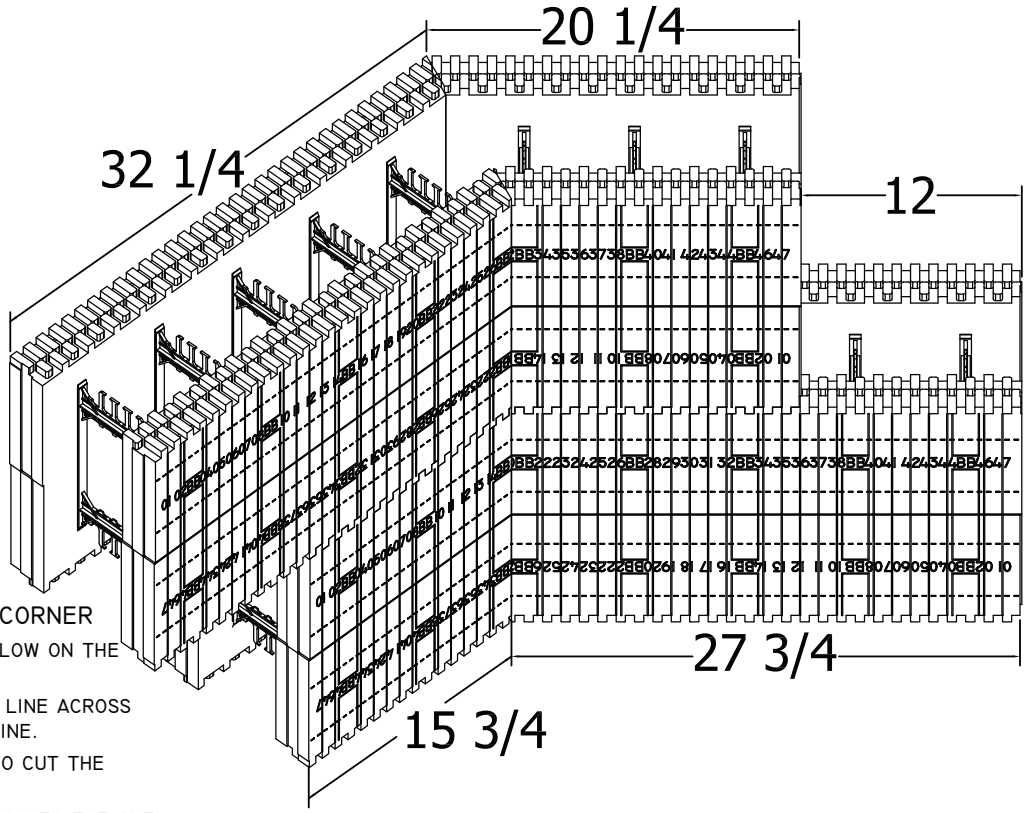

HOW TO FIELD FABRICATE A CORNER

1. MARK THE DIMENSIONS SHOWN BELOW ON THE BLOCK.
2. USING A STRAIGHT EDGE, DRAW A LINE ACROSS THE FORM TO SERVE AS A GUIDELINE.
3. USE A HOT KNIFE OR HAND SAW TO CUT THE FORM.
4. FLIP ONE OF THE HALVES AND ALIGN TO THE CUT EDGES TO MAKE THE MITERED CORNER.
5. FOAM GLUE THE EDGES, ZIP-TIE THE INTERLOCKING NUBS, AND ADD STRAPPING AND BRACING AS REQUIRED.

NOTE:

FIELD CUT CORNERS CAN BE EASILY MADE USING THESE DIMENSIONS. THE CUTS ARE DESIGNED TO ALLOW A SUFFICIENT RUNNING BOND FOR THE FORMS.

THESE DIMENSIONS DO NOT MATCH FACTORY CORNERS. CUTS SHOULD BE MADE WITH THE MOST ACCURATE SAW AVAILABLE. FIELD MITERS SHOULD BE REINFORCED WITH WOOD OR METAL STRAPPING AND BRACED ADEQUATELY. SEE THE BUILDBLOCK INSTALLATION & TECHNICAL MANUAL FOR MORE DETAIL ON STRAPPING AND BRACING.

BuildBlock® BUILDING SYSTEMS

9705 N. BROADWAY EXTENSION, SUITE 200, OKLAHOMA CITY, OK 73114
OFFICE: 405-840-3386 | TOLL FREE: 866-222-2575 | FAX: 831-597-0792
BUILDBLOCK.COM

BB-645/BL-645 45° FIELD FABRICATED CORNER

DATE/REV	8/2015	SCALE	NTS	DETAIL SHEET
NOTES				59D

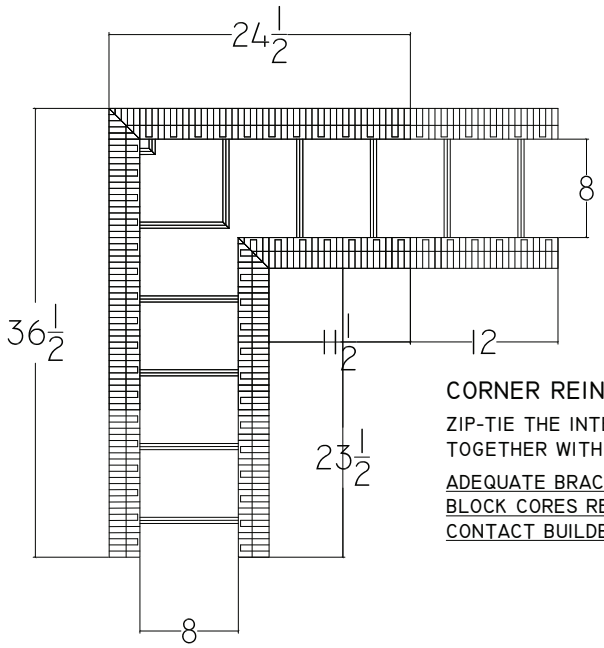

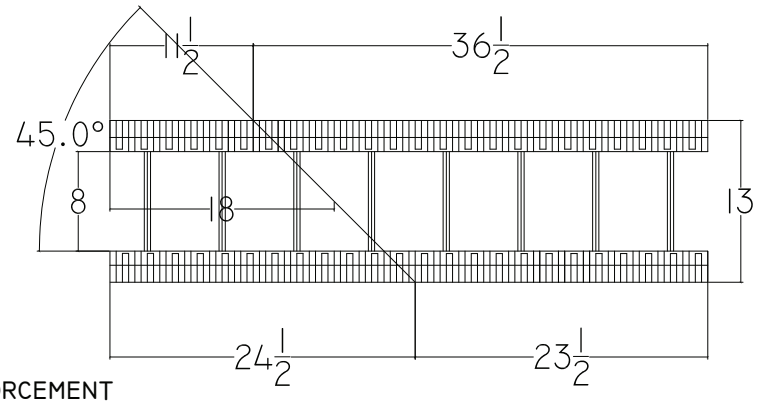

CORNER REINFORCEMENT

ZIP-TIE THE INTERLOCKING NUBS TOGETHER TO REINFORCE THE CORNER. BOND THE CUT EDGES TOGETHER WITH FOAM2FOAM OR SIMILAR LOW EXPANDING FOAM ADHESIVE.

ADEQUATE BRACING AND STRAPPING IS REQUIRED FOR ALL FIELD FABRICATED CORNERS. LARGER BLOCK CORES REQUIRE ADDITIONAL BRACING AND STRAPPING ON OUTSIDE CORNER CUTS. CONTACT BUILDBLOCK TECHNICAL SUPPORT FOR MORE INFORMATION.

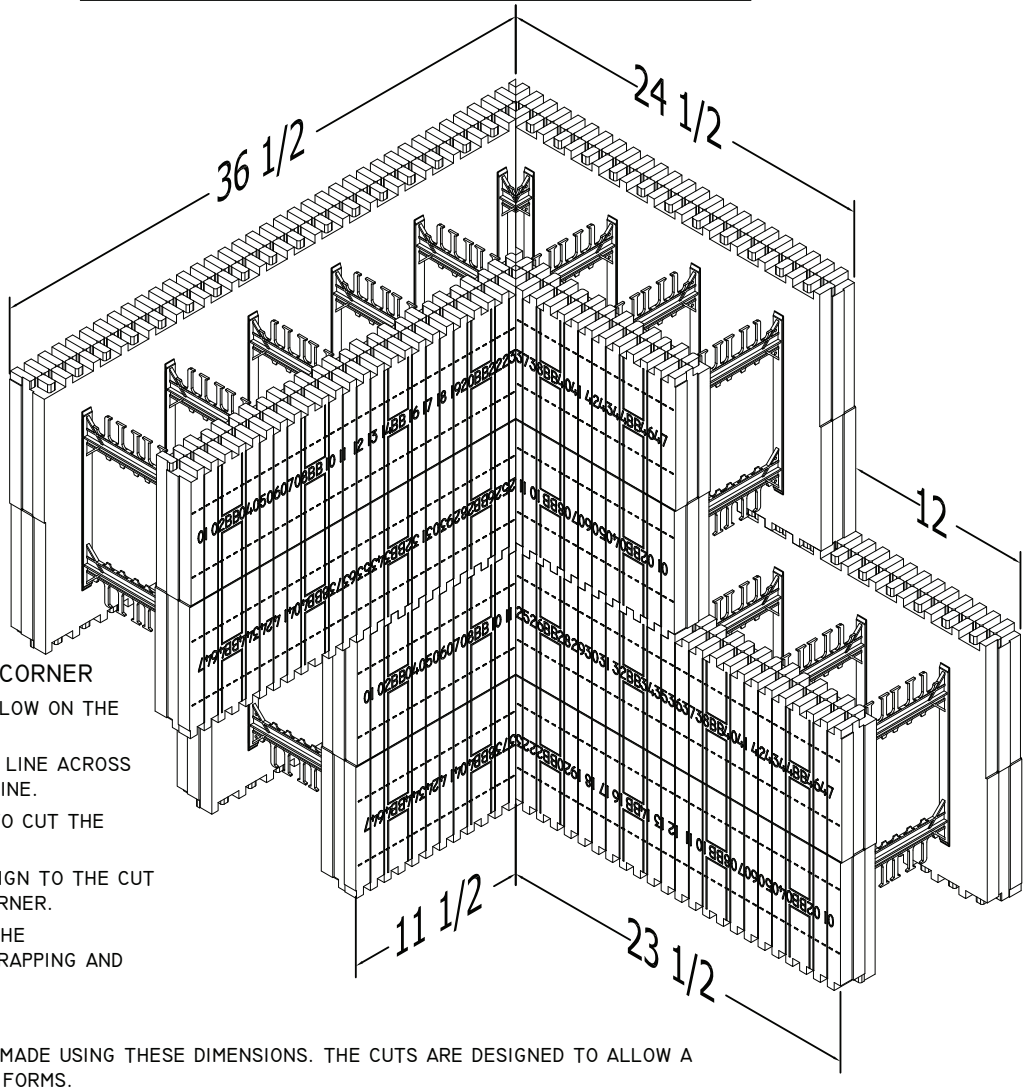

HOW TO FIELD FABRICATE A CORNER

1. MARK THE DIMENSIONS SHOWN BELOW ON THE BLOCK.
2. USING A STRAIGHT EDGE, DRAW A LINE ACROSS THE FORM TO SERVE AS A GUIDELINE.
3. USE A HOT KNIFE OR HAND SAW TO CUT THE FORM.
4. FLIP ONE OF THE HALVES AND ALIGN TO THE CUT EDGES TO MAKE THE MITERED CORNER.
5. FOAM GLUE THE EDGES, ZIP-TIE THE INTERLOCKING NUBS, AND ADD STRAPPING AND BRACING AS REQUIRED.

NOTE:

FIELD CUT CORNERS CAN BE EASILY MADE USING THESE DIMENSIONS. THE CUTS ARE DESIGNED TO ALLOW A SUFFICIENT RUNNING BOND FOR THE FORMS.

THESE DIMENSIONS DO NOT MATCH FACTORY CORNERS. CUTS SHOULD BE MADE WITH THE MOST ACCURATE SAW AVAILABLE. FIELD MITERS SHOULD BE REINFORCED WITH WOOD OR METAL STRAPPING AND BRACED ADEQUATELY. SEE THE BUILDBLOCK INSTALLATION & TECHNICAL MANUAL FOR MORE DETAIL ON STRAPPING AND BRACING.

BuildBlock® BUILDING SYSTEMS

9705 N. BROADWAY EXTENSION, SUITE 200, OKLAHOMA CITY, OK 73114
OFFICE: 405-840-3386 | TOLL FREE: 866-222-2575 | FAX: 831-597-0792
BUILDBLOCK.COM

BB-800/BL-800 90° FIELD FABRICATED CORNER

DATE/REV	8/2015	SCALE	NTS	DETAIL SHEET
NOTES				59E

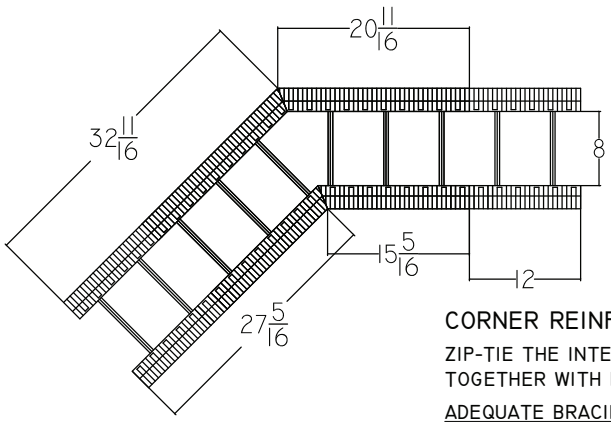

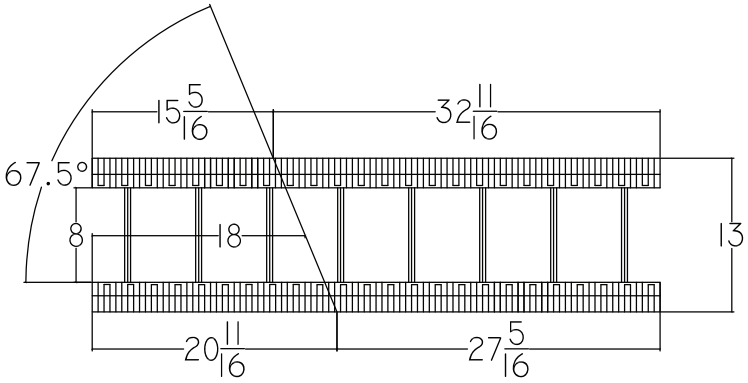

CORNER REINFORCEMENT

ZIP-TIE THE INTERLOCKING NUBS TOGETHER TO REINFORCE THE CORNER. BOND THE CUT EDGES TOGETHER WITH FOAM2FOAM OR SIMILAR LOW EXPANDING FOAM ADHESIVE.

ADEQUATE BRACING AND STRAPPING IS REQUIRED FOR ALL FIELD FABRICATED CORNERS. LARGER BLOCK CORES REQUIRE ADDITIONAL BRACING AND STRAPPING ON OUTSIDE CORNER CUTS. CONTACT BUILDBLOCK TECHNICAL SUPPORT FOR MORE INFORMATION.

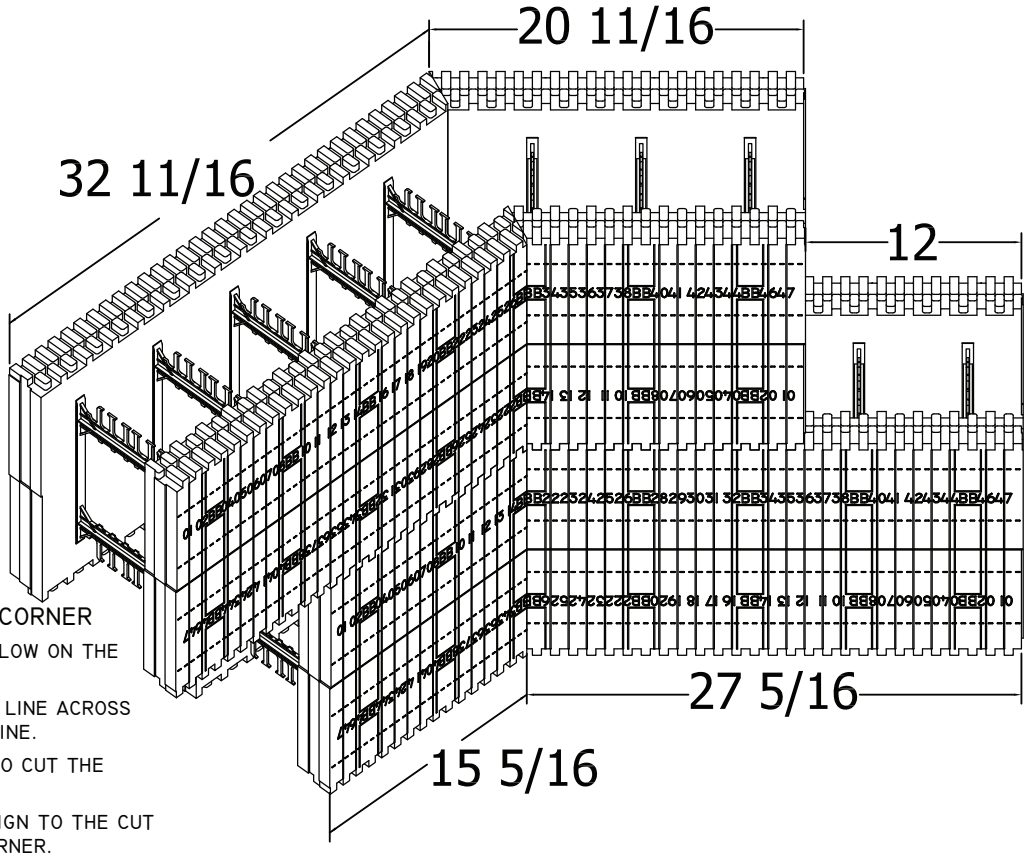

HOW TO FIELD FABRICATE A CORNER

1. MARK THE DIMENSIONS SHOWN BELOW ON THE BLOCK.
2. USING A STRAIGHT EDGE, DRAW A LINE ACROSS THE FORM TO SERVE AS A GUIDELINE.
3. USE A HOT KNIFE OR HAND SAW TO CUT THE FORM.
4. FLIP ONE OF THE HALVES AND ALIGN TO THE CUT EDGES TO MAKE THE MITERED CORNER.
5. FOAM GLUE THE EDGES, ZIP-TIE THE INTERLOCKING NUBS, AND ADD STRAPPING AND BRACING AS REQUIRED.

NOTE:

FIELD CUT CORNERS CAN BE EASILY MADE USING THESE DIMENSIONS. THE CUTS ARE DESIGNED TO ALLOW A SUFFICIENT RUNNING BOND FOR THE FORMS.

THESE DIMENSIONS DO NOT MATCH FACTORY CORNERS. CUTS SHOULD BE MADE WITH THE MOST ACCURATE SAW AVAILABLE. FIELD MITERS SHOULD BE REINFORCED WITH WOOD OR METAL STRAPPING AND BRACED ADEQUATELY. SEE THE BUILDBLOCK INSTALLATION & TECHNICAL MANUAL FOR MORE DETAIL ON STRAPPING AND BRACING.

BuildBlock® BUILDING SYSTEMS

BB-845/BL-845 45° FIELD FABRICATED CORNER

DATE/REV	8/2015	SCALE	NTS	DETAIL SHEET
NOTES				59F

9705 N. BROADWAY EXTENSION, SUITE 200, OKLAHOMA CITY, OK 73114
OFFICE: 405-840-3386 | TOLL FREE: 866-222-2575 | FAX: 831-597-0792
BUILDBLOCK.COM

CONSTRUCTION SHALL BE IN ACCORDANCE WITH ALL APPLICABLE LOCAL AND NATIONAL CODES. ALL DRAWINGS ARE SUBJECT TO CHANGE WITHOUT NOTICE.

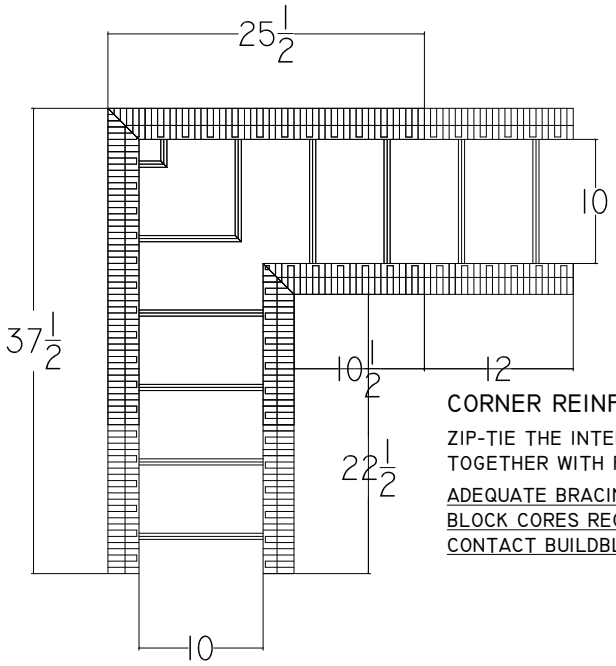

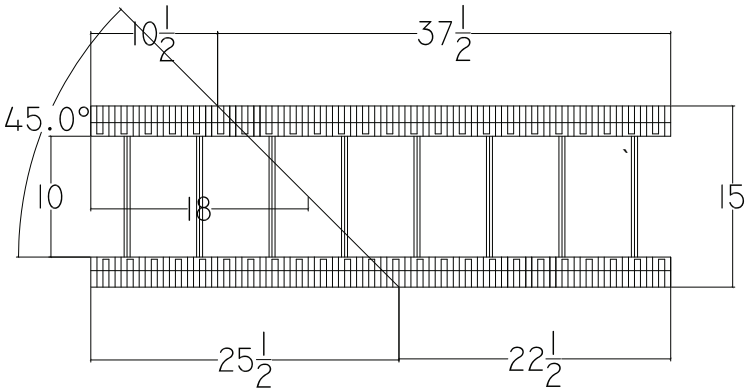

CORNER REINFORCEMENT

ZIP-TIE THE INTERLOCKING NUBS TOGETHER TO REINFORCE THE CORNER. BOND THE CUT EDGES TOGETHER WITH FOAM2FOAM OR SIMILAR LOW EXPANDING FOAM ADHESIVE.

ADEQUATE BRACING AND STRAPPING IS REQUIRED FOR ALL FIELD FABRICATED CORNERS. LARGER BLOCK CORES REQUIRE ADDITIONAL BRACING AND STRAPPING ON OUTSIDE CORNER CUTS. CONTACT BUILDBLOCK TECHNICAL SUPPORT FOR MORE INFORMATION.

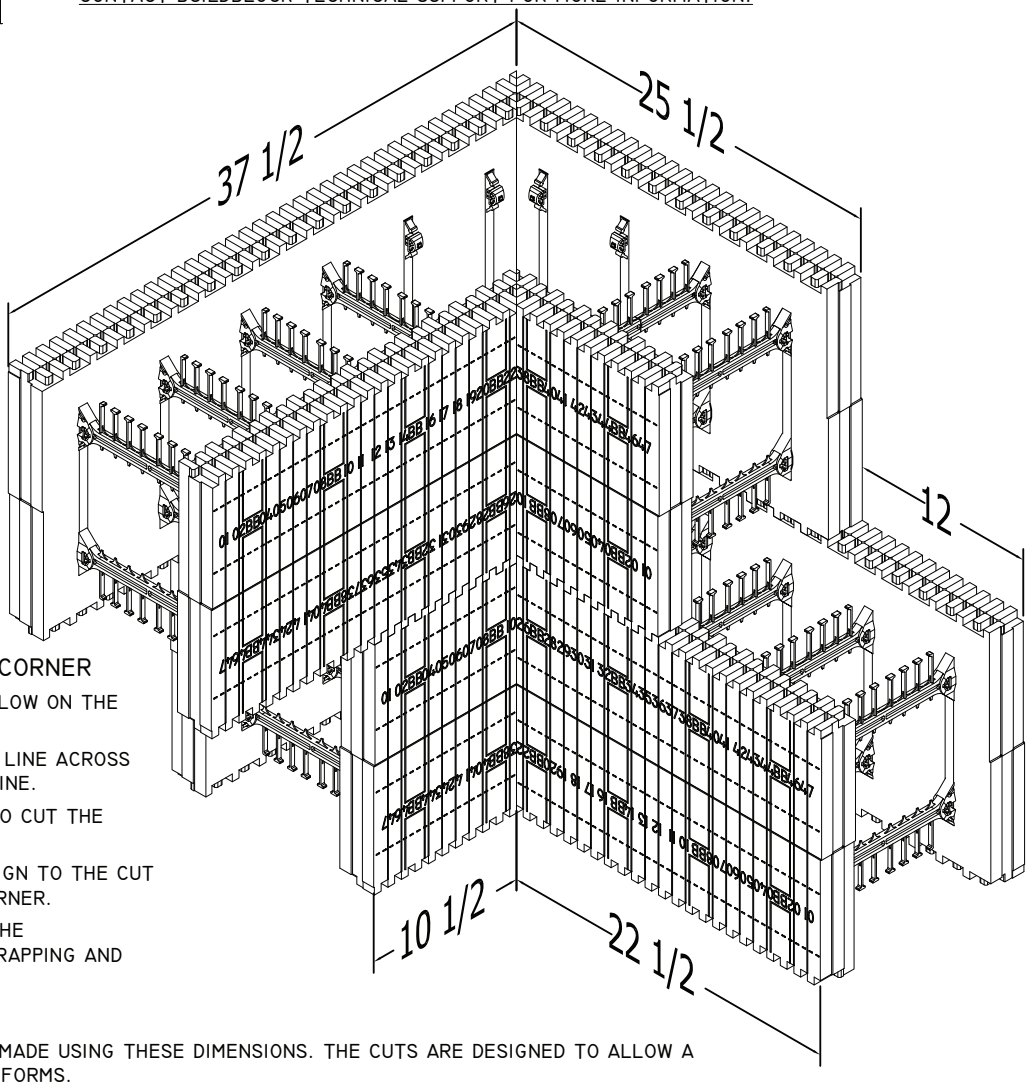

HOW TO FIELD FABRICATE A CORNER

1. MARK THE DIMENSIONS SHOWN BELOW ON THE BLOCK.
2. USING A STRAIGHT EDGE, DRAW A LINE ACROSS THE FORM TO SERVE AS A GUIDELINE.
3. USE A HOT KNIFE OR HAND SAW TO CUT THE FORM.
4. FLIP ONE OF THE HALVES AND ALIGN TO THE CUT EDGES TO MAKE THE MITERED CORNER.
5. FOAM GLUE THE EDGES, ZIP-TIE THE INTERLOCKING NUBS, AND ADD STRAPPING AND BRACING AS REQUIRED.

NOTE:

FIELD CUT CORNERS CAN BE EASILY MADE USING THESE DIMENSIONS. THE CUTS ARE DESIGNED TO ALLOW A SUFFICIENT RUNNING BOND FOR THE FORMS.

THESE DIMENSIONS DO NOT MATCH FACTORY CORNERS. CUTS SHOULD BE MADE WITH THE MOST ACCURATE SAW AVAILABLE. FIELD MITERS SHOULD BE REINFORCED WITH WOOD OR METAL STRAPPING AND BRACED ADEQUATELY. SEE THE BUILDBLOCK INSTALLATION & TECHNICAL MANUAL FOR MORE DETAIL ON STRAPPING AND BRACING.

BuildBlock® BUILDING SYSTEMS

9705 N. BROADWAY EXTENSION, SUITE 200, OKLAHOMA CITY, OK 73114
OFFICE: 405-840-3386 | TOLL FREE: 866-222-2575 | FAX: 831-597-0792
BUILDBLOCK.COM

BB-1000/BL-1000 90° FIELD FABRICATED CORNER

DATE/REV	8/2015	SCALE	NTS	DETAIL SHEET
NOTES				59G

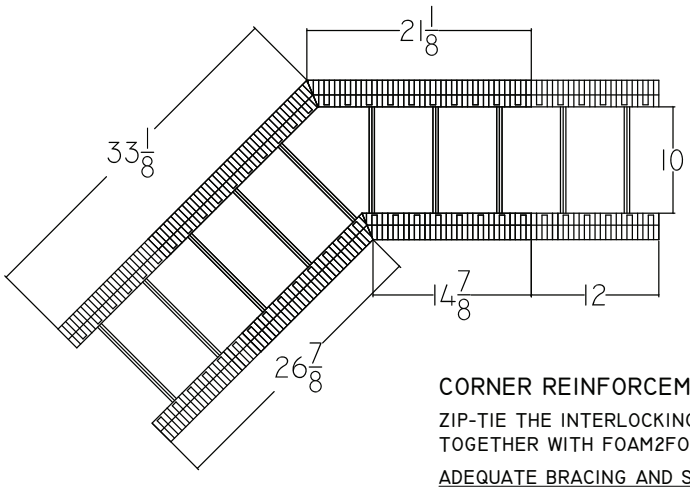

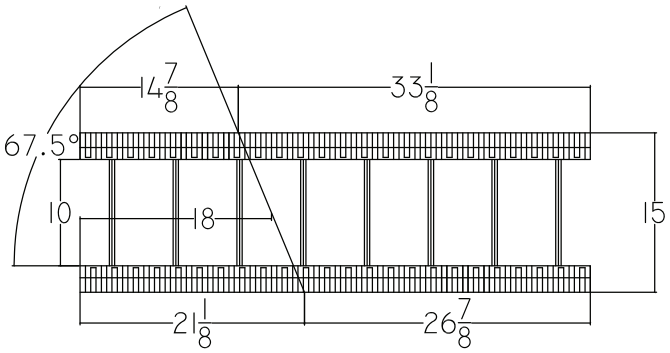

CORNER REINFORCEMENT

ZIP-TIE THE INTERLOCKING NUBS TOGETHER TO REINFORCE THE CORNER. BOND THE CUT EDGES TOGETHER WITH FOAM2FOAM OR SIMILAR LOW EXPANDING FOAM ADHESIVE.

ADEQUATE BRACING AND STRAPPING IS REQUIRED FOR ALL FIELD FABRICATED CORNERS. LARGER BLOCK CORES REQUIRE ADDITIONAL BRACING AND STRAPPING ON OUTSIDE CORNER CUTS. CONTACT BUILDBLOCK TECHNICAL SUPPORT FOR MORE INFORMATION.

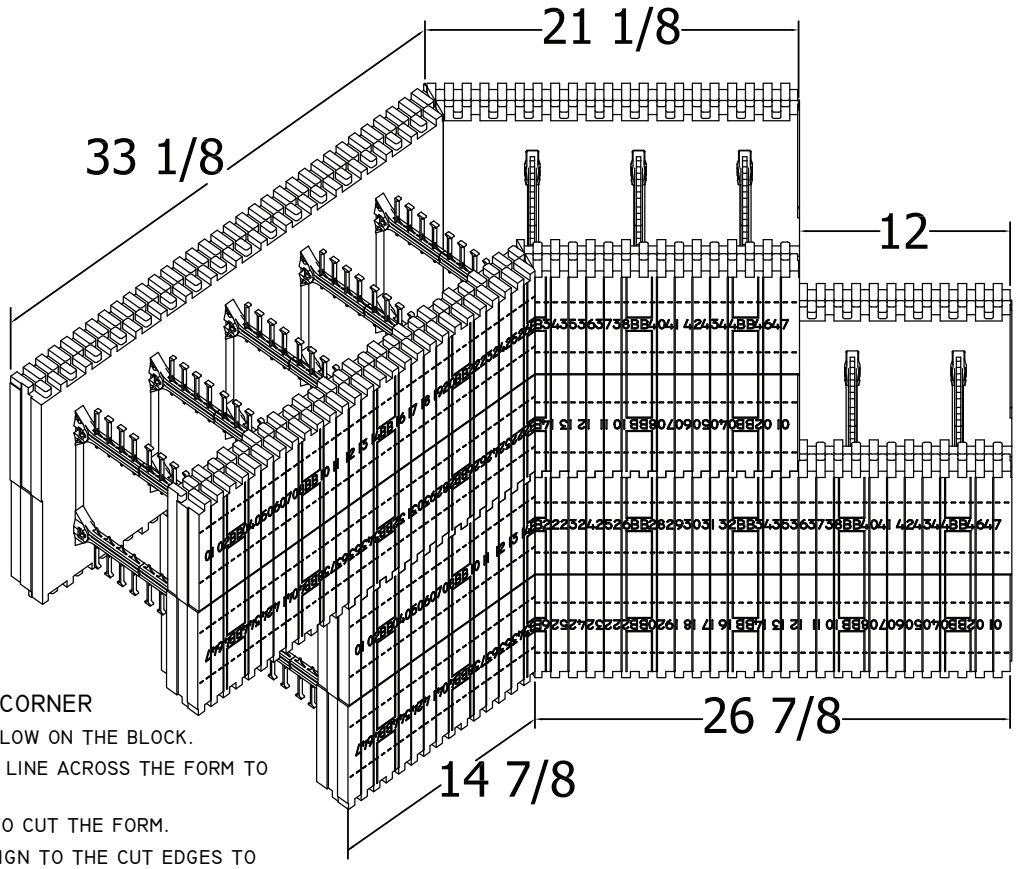

HOW TO FIELD FABRICATE A CORNER

1. MARK THE DIMENSIONS SHOWN BELOW ON THE BLOCK.
2. USING A STRAIGHT EDGE, DRAW A LINE ACROSS THE FORM TO SERVE AS A GUIDELINE.
3. USE A HOT KNIFE OR HAND SAW TO CUT THE FORM.
4. FLIP ONE OF THE HALVES AND ALIGN TO THE CUT EDGES TO MAKE THE MITERED CORNER.
5. FOAM GLUE THE EDGES, ZIP-TIE THE INTERLOCKING NUBS, AND ADD STRAPPING AND BRACING AS REQUIRED.

NOTE:

FIELD CUT CORNERS CAN BE EASILY MADE USING THESE DIMENSIONS. THE CUTS ARE DESIGNED TO ALLOW A SUFFICIENT RUNNING BOND FOR THE FORMS.

THESE DIMENSIONS DO NOT MATCH FACTORY CORNERS. CUTS SHOULD BE MADE WITH THE MOST ACCURATE SAW AVAILABLE. FIELD MITERS SHOULD BE REINFORCED WITH WOOD OR METAL STRAPPING AND BRACED ADEQUATELY. SEE THE BUILDBLOCK INSTALLATION & TECHNICAL MANUAL FOR MORE DETAIL ON STRAPPING AND BRACING.

BuildBlock® BUILDING SYSTEMS

BB-1045/BL-1045 45° FIELD FABRICATED CORNER

DATE/REV	8/2015	SCALE	NTS	DETAIL SHEET
NOTES				59H

9705 N. BROADWAY EXTENSION, SUITE 200, OKLAHOMA CITY, OK 73114
OFFICE: 405-840-3386 | TOLL FREE: 866-222-2575 | FAX: 831-597-0792
BUILDBLOCK.COM

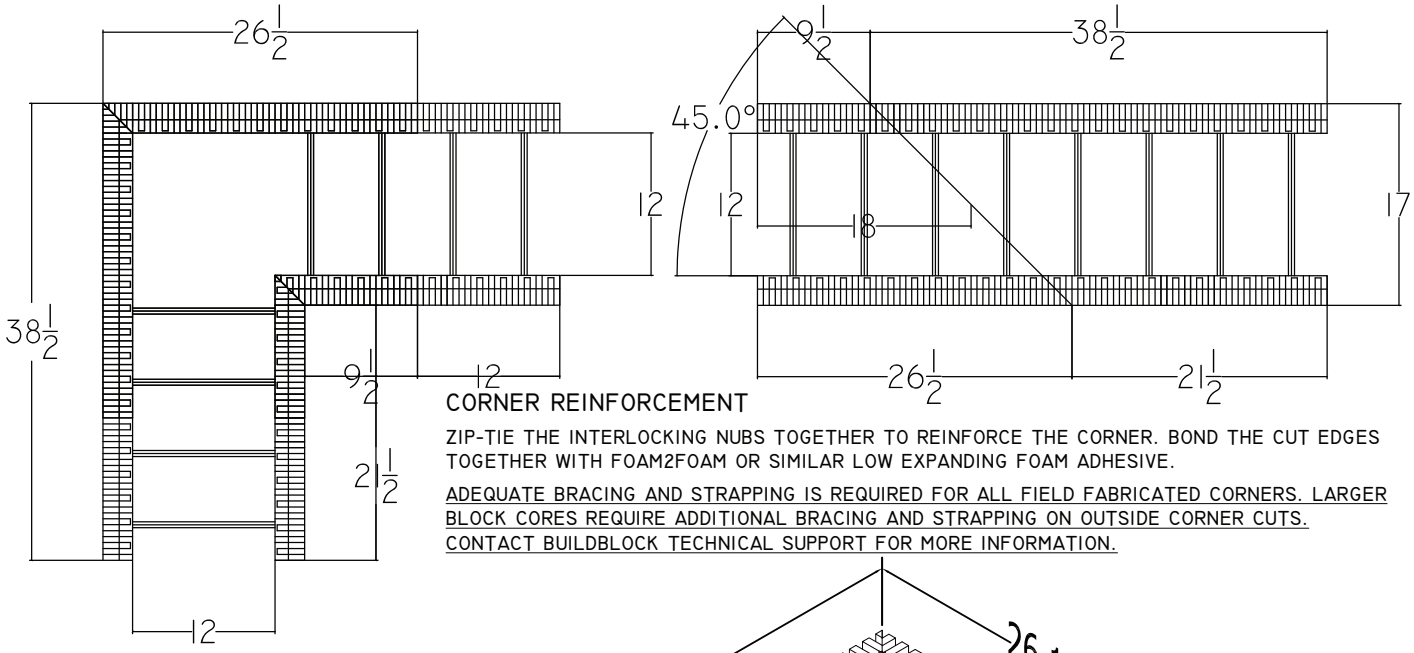

CORNER REINFORCEMENT

ZIP-TIE THE INTERLOCKING NUBS TOGETHER TO REINFORCE THE CORNER. BOND THE CUT EDGES TOGETHER WITH FOAM2FOAM OR SIMILAR LOW EXPANDING FOAM ADHESIVE.

ADEQUATE BRACING AND STRAPPING IS REQUIRED FOR ALL FIELD FABRICATED CORNERS. LARGER BLOCK CORES REQUIRE ADDITIONAL BRACING AND STRAPPING ON OUTSIDE CORNER CUTS. CONTACT BUILDBLOCK TECHNICAL SUPPORT FOR MORE INFORMATION.

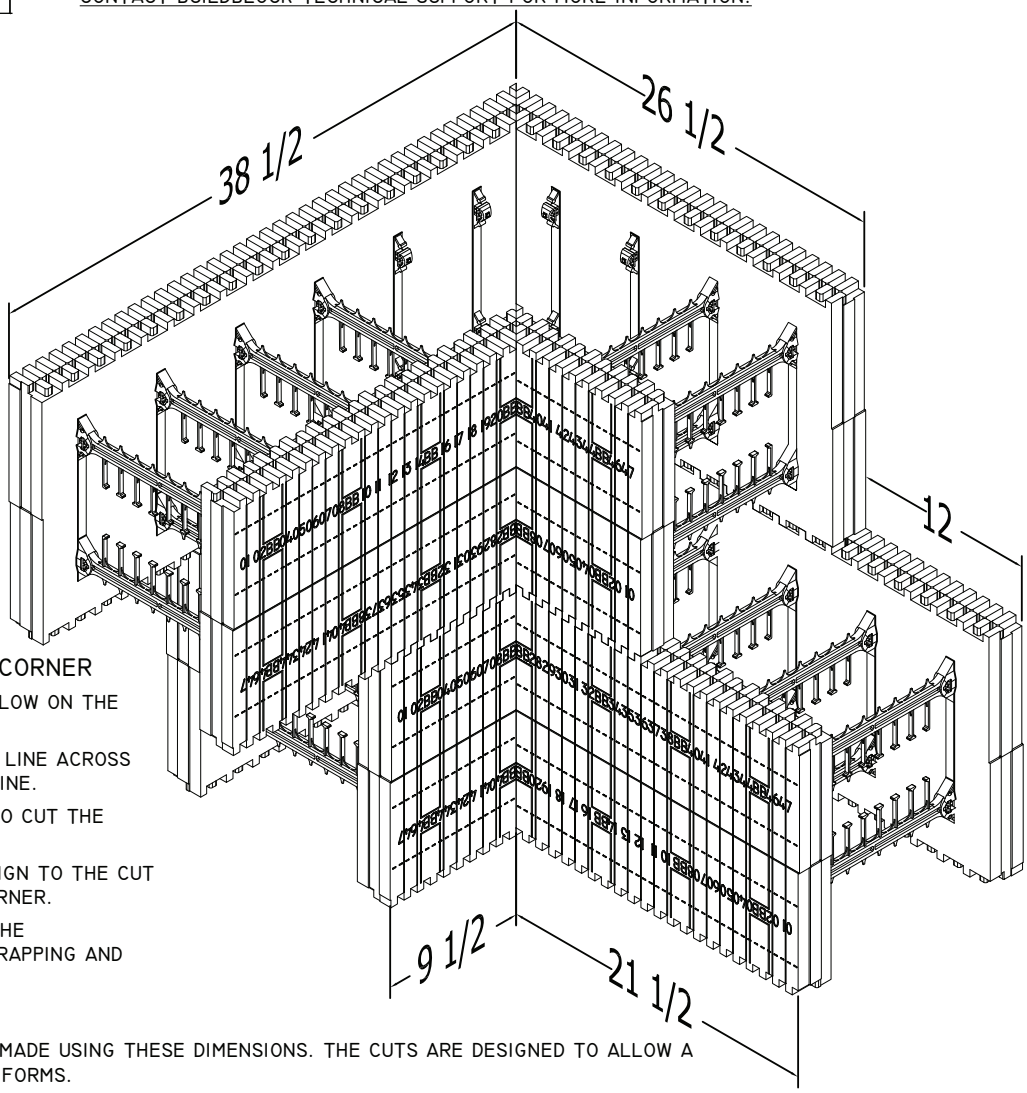

HOW TO FIELD FABRICATE A CORNER

1. MARK THE DIMENSIONS SHOWN BELOW ON THE BLOCK.
2. USING A STRAIGHT EDGE, DRAW A LINE ACROSS THE FORM TO SERVE AS A GUIDELINE.
3. USE A HOT KNIFE OR HAND SAW TO CUT THE FORM.
4. FLIP ONE OF THE HALVES AND ALIGN TO THE CUT EDGES TO MAKE THE MITERED CORNER.
5. FOAM GLUE THE EDGES, ZIP-TIE THE INTERLOCKING NUBS, AND ADD STRAPPING AND BRACING AS REQUIRED.

NOTE:

FIELD CUT CORNERS CAN BE EASILY MADE USING THESE DIMENSIONS. THE CUTS ARE DESIGNED TO ALLOW A SUFFICIENT RUNNING BOND FOR THE FORMS.

THESE DIMENSIONS DO NOT MATCH FACTORY CORNERS. CUTS SHOULD BE MADE WITH THE MOST ACCURATE SAW AVAILABLE. FIELD MITERS SHOULD BE REINFORCED WITH WOOD OR METAL STRAPPING AND BRACED ADEQUATELY. SEE THE BUILDBLOCK INSTALLATION & TECHNICAL MANUAL FOR MORE DETAIL ON STRAPPING AND BRACING.

BuildBlock BUILDING SYSTEMS
9705 N. BROADWAY EXTENSION, SUITE 200, OKLAHOMA CITY, OK 73114
OFFICE: 405-840-3386 | TOLL FREE: 866-222-2575 | FAX: 831-597-0792
BUILDBLOCK.COM

BB-1200/BL-1200 90° FIELD FABRICATED CORNER

DATE/REV	8/2015	SCALE	NTS	DETAIL SHEET
NOTES				591

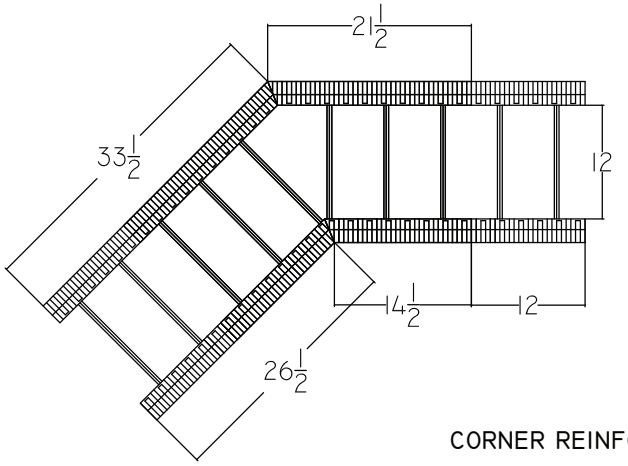

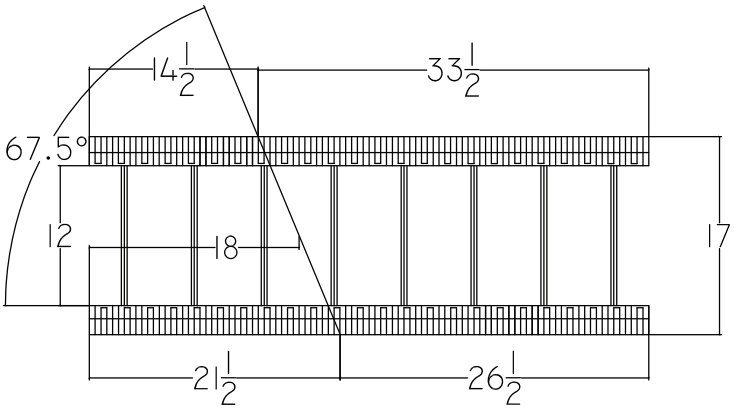

CORNER REINFORCEMENT

ZIP-TIE THE INTERLOCKING NUBS TOGETHER TO REINFORCE THE CORNER. BOND THE CUT EDGES TOGETHER WITH FOAM2FOAM OR SIMILAR LOW EXPANDING FOAM ADHESIVE.

ADEQUATE BRACING AND STRAPPING IS REQUIRED FOR ALL FIELD FABRICATED CORNERS. LARGER BLOCK CORES REQUIRE ADDITIONAL BRACING AND STRAPPING ON OUTSIDE CORNER CUTS. CONTACT BUILDBLOCK TECHNICAL SUPPORT FOR MORE INFORMATION.

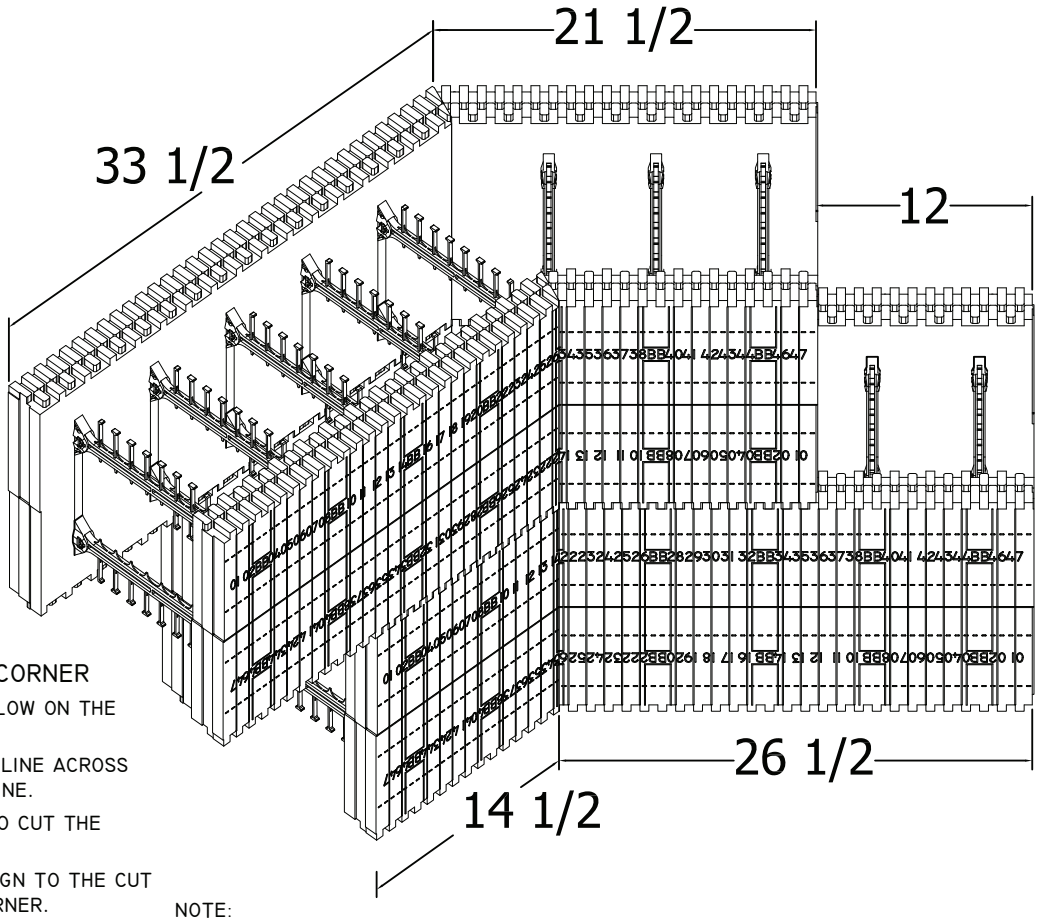

HOW TO FIELD FABRICATE A CORNER

1. MARK THE DIMENSIONS SHOWN BELOW ON THE BLOCK.
2. USING A STRAIGHT EDGE, DRAW A LINE ACROSS THE FORM TO SERVE AS A GUIDELINE.
3. USE A HOT KNIFE OR HAND SAW TO CUT THE FORM.
4. FLIP ONE OF THE HALVES AND ALIGN TO THE CUT EDGES TO MAKE THE MITERED CORNER.
5. FOAM GLUE THE EDGES, ZIP-TIE THE INTERLOCKING NUBS, AND ADD STRAPPING AND BRACING AS REQUIRED.

NOTE:

FIELD CUT CORNERS CAN BE EASILY MADE USING THESE DIMENSIONS. THE CUTS ARE DESIGNED TO ALLOW A SUFFICIENT RUNNING BOND FOR THE FORMS.

THESE DIMENSIONS DO NOT MATCH FACTORY CORNERS. CUTS SHOULD BE MADE WITH THE MOST ACCURATE SAW AVAILABLE. FIELD MITERS SHOULD BE REINFORCED WITH WOOD OR METAL STRAPPING AND BRACED ADEQUATELY. SEE THE BUILDBLOCK INSTALLATION & TECHNICAL MANUAL FOR MORE DETAIL ON STRAPPING AND BRACING.

BuildBlock® BUILDING SYSTEMS

9705 N. BROADWAY EXTENSION, SUITE 200, OKLAHOMA CITY, OK 73114
OFFICE: 405-840-3386 | TOLL FREE: 866-222-2575 | FAX: 831-597-0792
BUILDBLOCK.COM

BB-1245/BL-1245 45° FIELD FABRICATED CORNER

DATE/REV	8/2015	SCALE	NTS	DETAIL SHEET
NOTES				59J

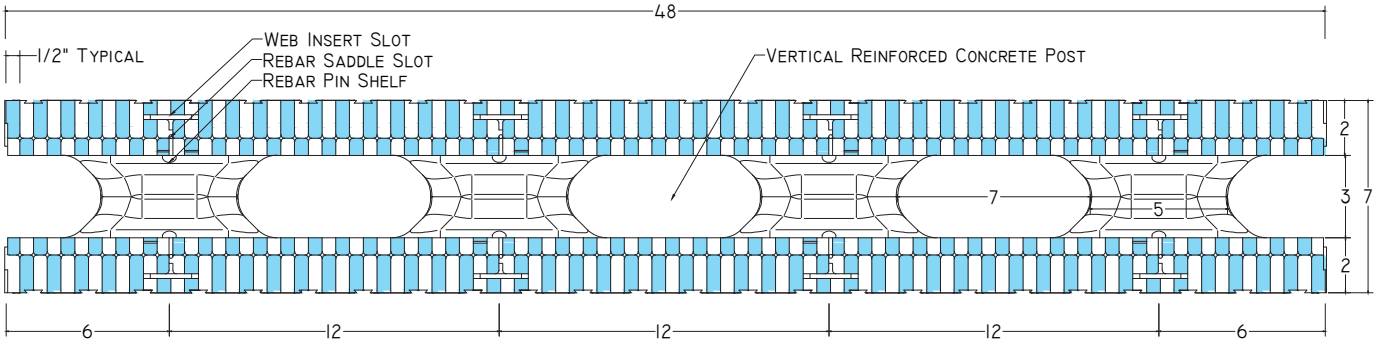

1 Top / Bottom View (Reversible)
Scale: NTS

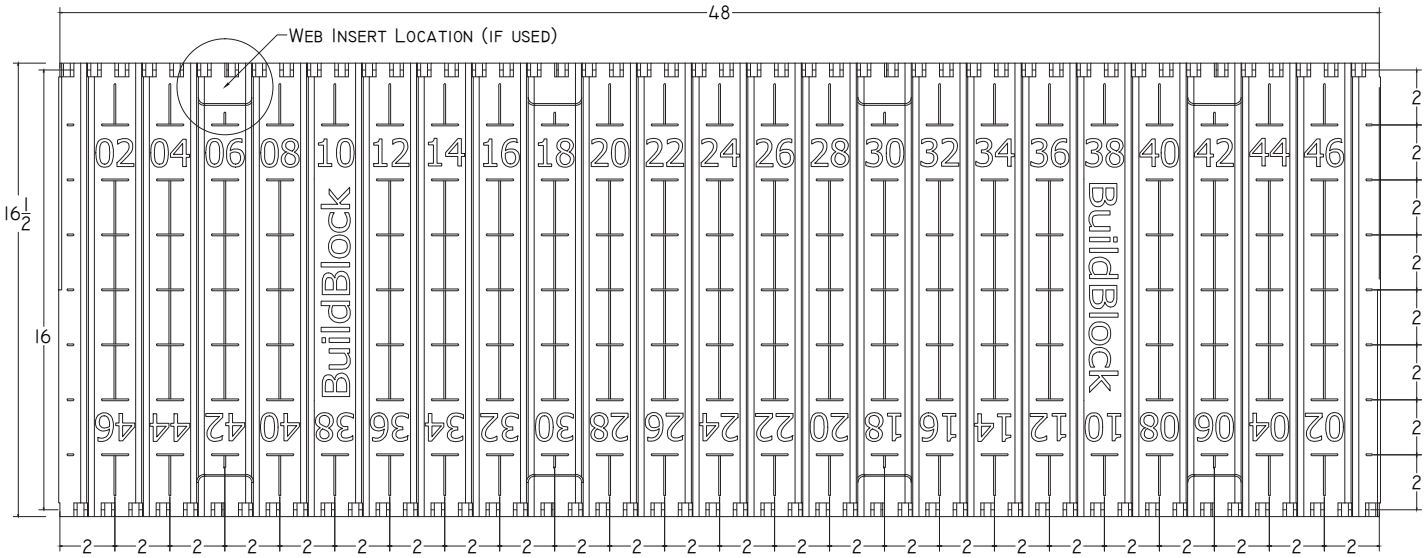

2 Front View
Scale: NTS

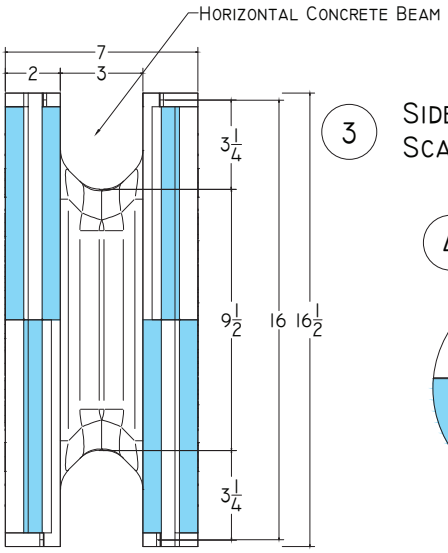

3 Side View
Scale: NTS

4 Dovetail Detail
Scale: NTS

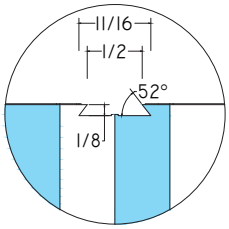

NOTE:
Form is reversible, both horizontally and vertically.
Blocks stack @ 1'-4" (16") increments.

LEGEND:
■ = Positive profiles (tongues)
□ = Negative profiles (grooves)

BuildBlock® BUILDING SYSTEMS

9705 N. BROADWAY EXTENSION, SUITE 200, OKLAHOMA CITY, OK 73114
OFFICE: 405-840-3386 | TOLL FREE: 866-222-2575 | FAX: 831-597-0792
BUILDBLOCK.COM

GLOBALBLOCK ALL FOAM ICF 3" STRAIGHT BLOCK

DATE/REV	9/2015	SCALE	NTS	DETAIL SHEET
NOTES				60A

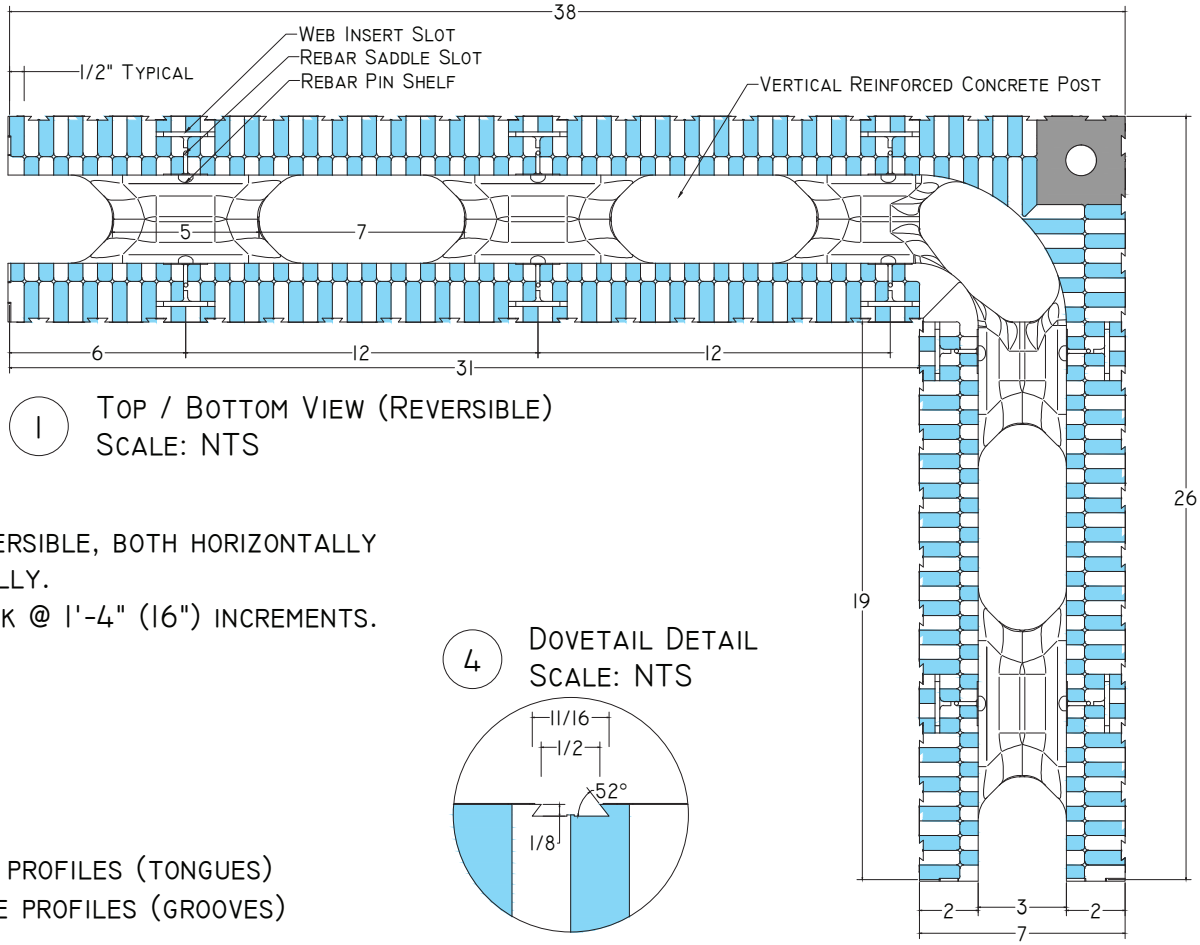

1 Top / Bottom View (Reversible)
Scale: NTS

NOTE:
Form is reversible, both horizontally and vertically.
Blocks stack @ 1'-4" (16") increments.

4 Dovetail Detail
Scale: NTS

LEGEND:
■ = Positive profiles (tongues)
□ = Negative profiles (grooves)

2 Front View
Scale: NTS

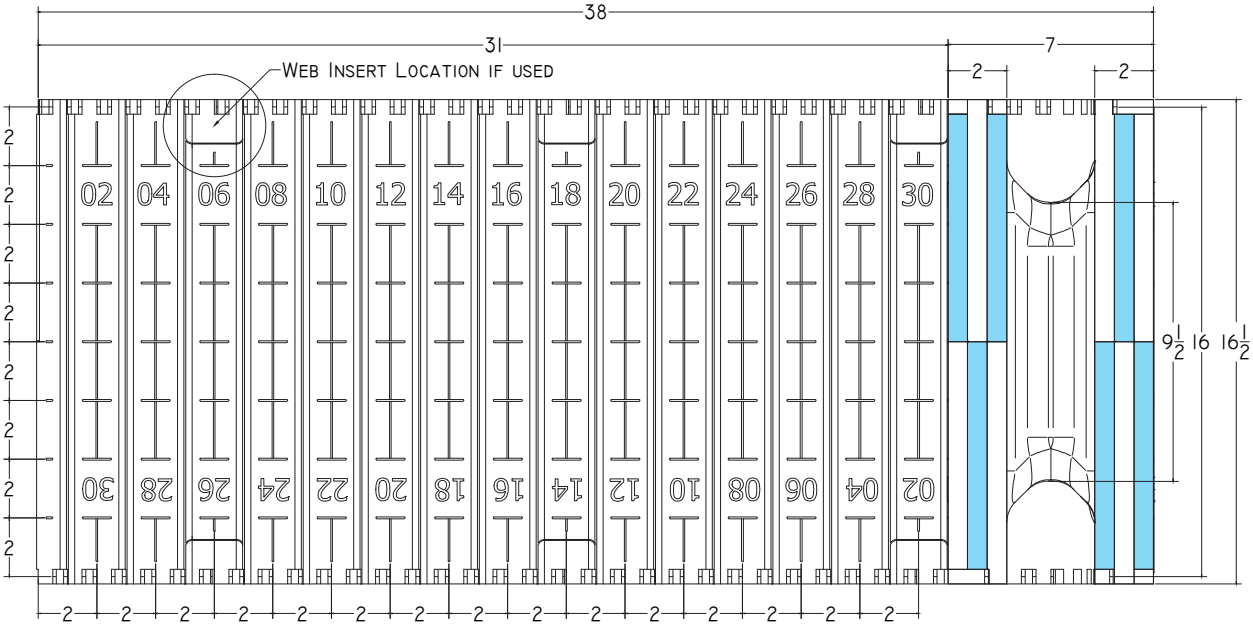

BuildBlock BUILDING SYSTEMS	GLOBALBLOCK ALL FOAM ICF 3" 90° CORNER BLOCK			
	DATE/REV 9/2015	SCALE NTS		DETAIL SHEET
	NOTES			60B
9705 N. BROADWAY EXTENSION, SUITE 200, OKLAHOMA CITY, OK 73114 OFFICE: 405-840-3386 | TOLL FREE: 866-222-2575 | FAX: 831-597-0792 BUILDBLOCK.COM	CONSTRUCTION SHALL BE IN ACCORDANCE WITH ALL APPLICABLE LOCAL AND NATIONAL CODES. ALL DRAWINGS ARE SUBJECT TO CHANGE WITHOUT NOTICE.			

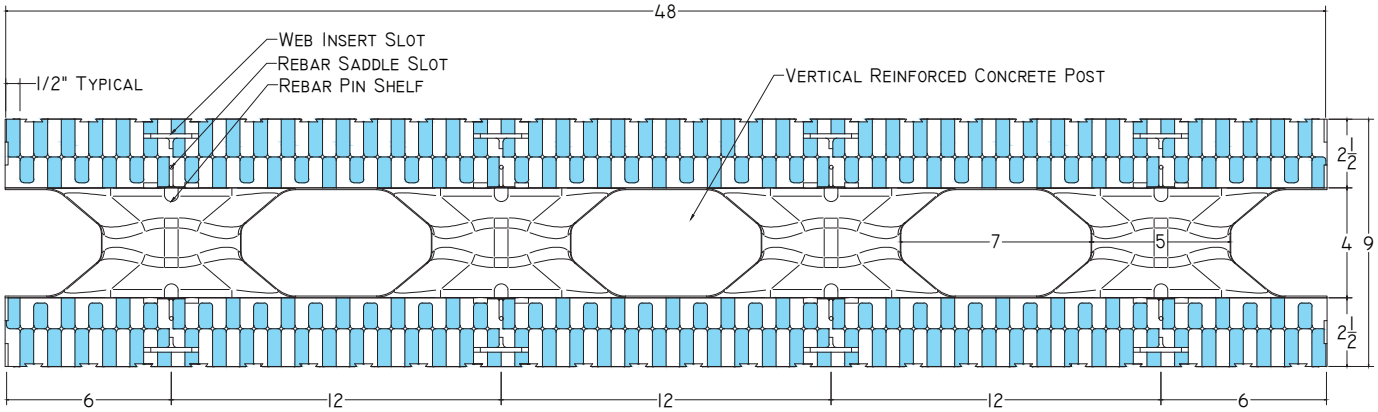

1 Top / Bottom View (Reversible)
Scale: NTS

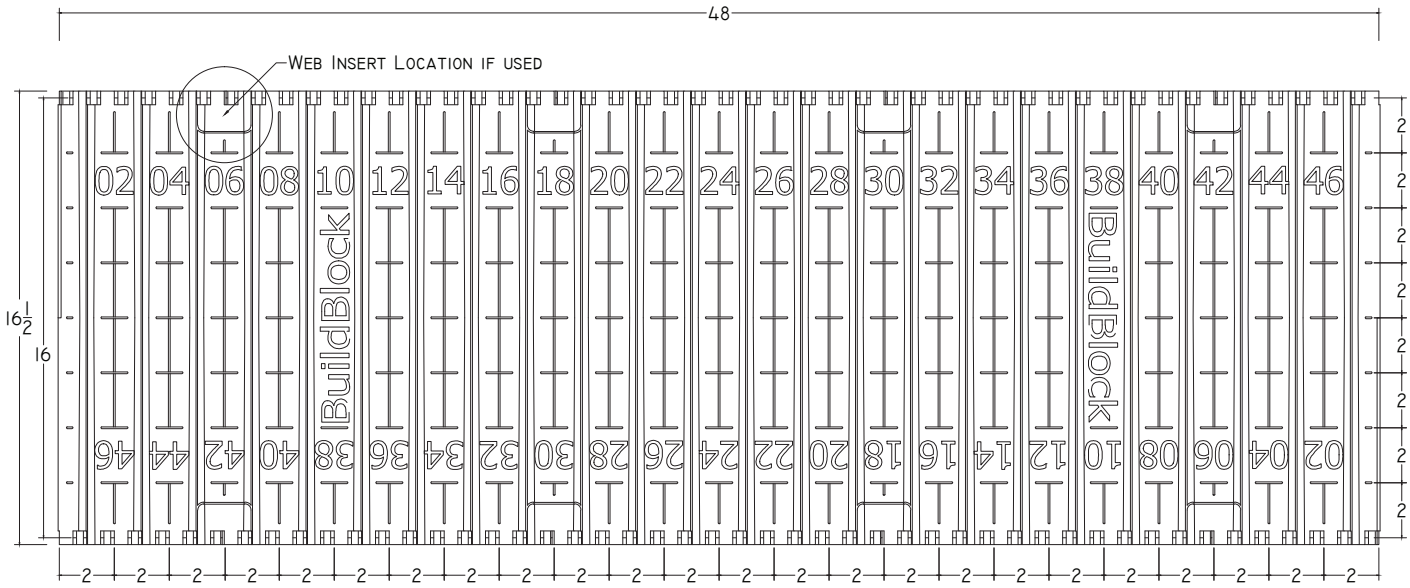

2 Front View
Scale: NTS

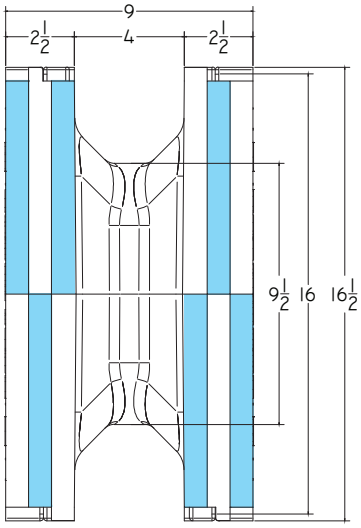

3 Side View
Scale: NTS

4 Dovetail Detail
Scale: NTS

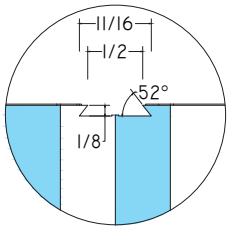

NOTE:
Form is reversible, both horizontally and vertically.
Blocks stack @ 1'-4" (16") increments.

LEGEND:
■ = Positive profiles (tongues)
□ = Negative profiles (grooves)

BuildBlock® BUILDING SYSTEMS

9705 N. BROADWAY EXTENSION, SUITE 200, OKLAHOMA CITY, OK 73114
OFFICE: 405-840-3386 | TOLL FREE: 866-222-2575 | FAX: 831-597-0792
BUILDBLOCK.COM

GLOBALBLOCK ALL FOAM ICF 4" STRAIGHT BLOCK

DATE/REV	9/2015	SCALE	NTS	DETAIL SHEET
NOTES				60C

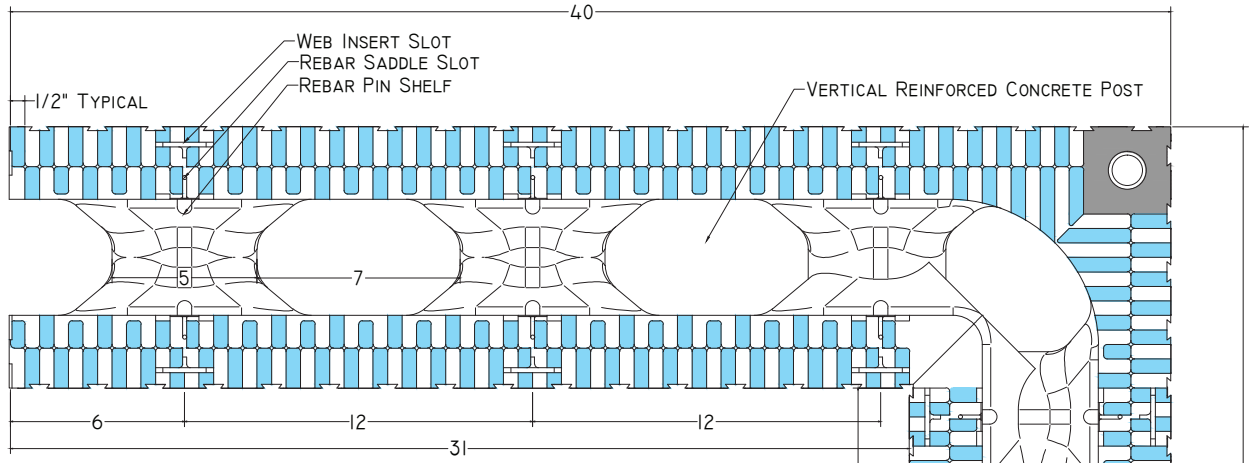

1 Top / Bottom View (Reversible)
Scale: NTS

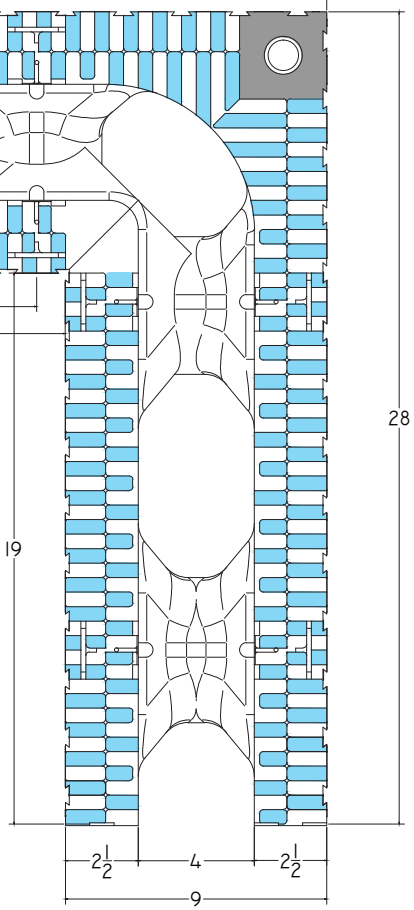

NOTE:
Form is reversible, both horizontally and vertically.
Blocks stack @ 1'-4" (16") increments.

4 Dovetail Detail
Scale: NTS

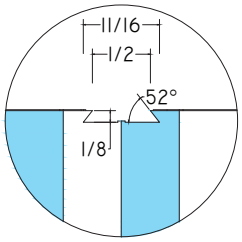

LEGEND:
■ = Positive profiles (tongues)
□ = Negative profiles (grooves)

2 Front View
Scale: NTS

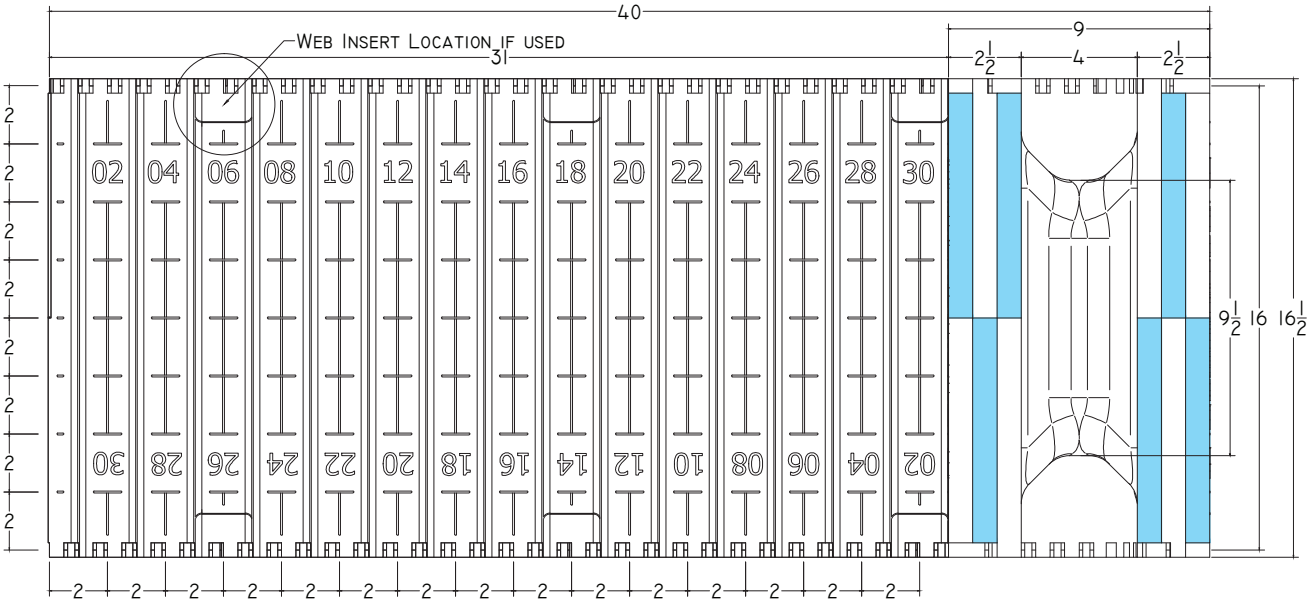

BuildBlock® BUILDING SYSTEMS

9705 N. BROADWAY EXTENSION, SUITE 200, OKLAHOMA CITY, OK 73114
OFFICE: 405-840-3386 | TOLL FREE: 866-222-2575 | FAX: 831-597-0792
BUILDBLOCK.COM

GLOBALBLOCK ALL FOAM ICF 4" 90° CORNER BLOCK

DATE/REV	9/2015	SCALE	NTS	DETAIL SHEET
NOTES				60D

CONSTRUCTION SHALL BE IN ACCORDANCE WITH ALL APPLICABLE LOCAL AND NATIONAL CODES. ALL DRAWINGS ARE SUBJECT TO CHANGE WITHOUT NOTICE.

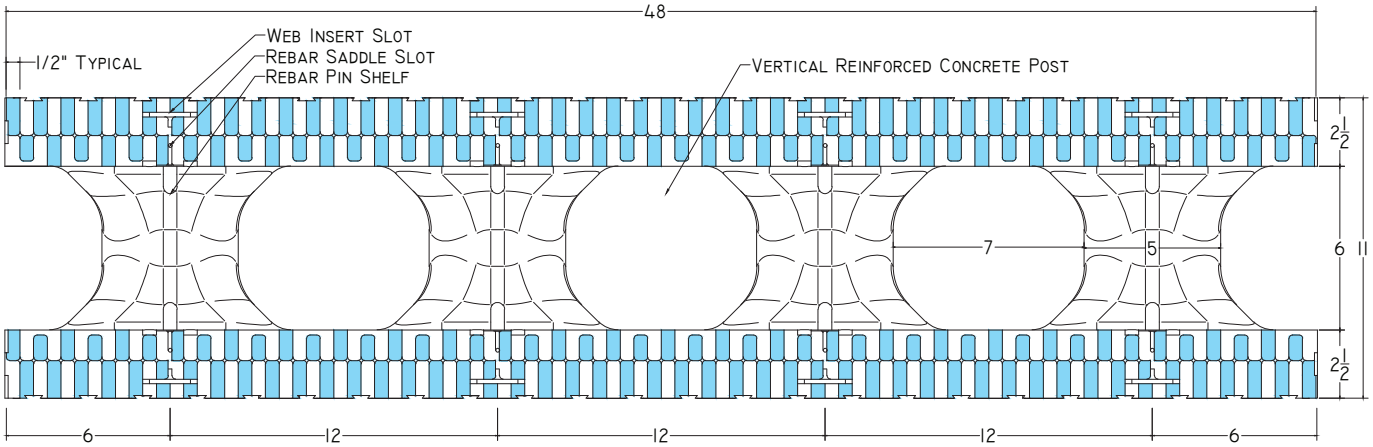

1 Top / Bottom View (Reversible)
Scale: NTS

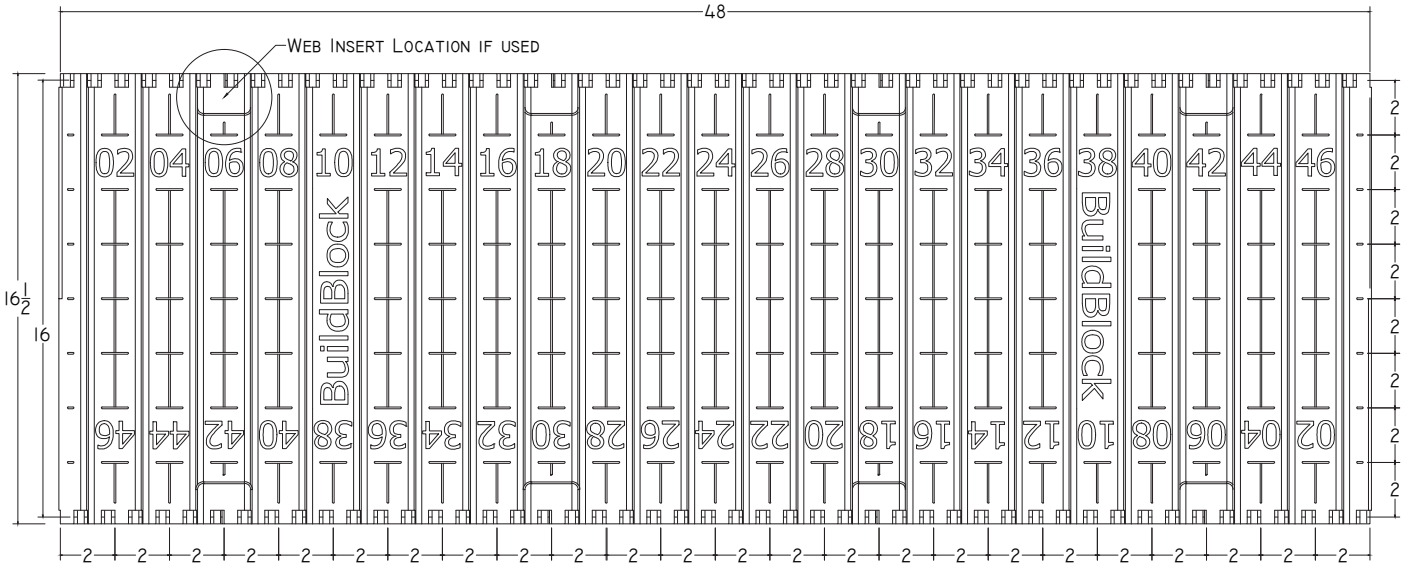

2 Front View
Scale: NTS

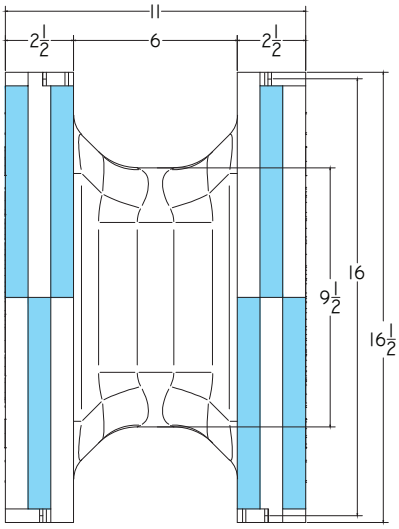

3 Side View
Scale: NTS

4 Dovetail Detail
Scale: NTS

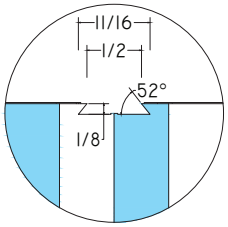

NOTE:
Form is reversible, both horizontally and vertically.
Blocks stack @ 1'-4" (16") increments.

LEGEND:
■ = Positive profiles (tongues)
□ = Negative profiles (grooves)

BuildBlock® BUILDING SYSTEMS

9705 N. BROADWAY EXTENSION, SUITE 200, OKLAHOMA CITY, OK 73114
OFFICE: 405-840-3386 | TOLL FREE: 866-222-2575 | FAX: 831-597-0792
BUILDBLOCK.COM

GLOBALBLOCK ALL FOAM ICF 6" STRAIGHT BLOCK

DATE/REV	9/2015	SCALE	NTS	DETAIL SHEET
NOTES				60E

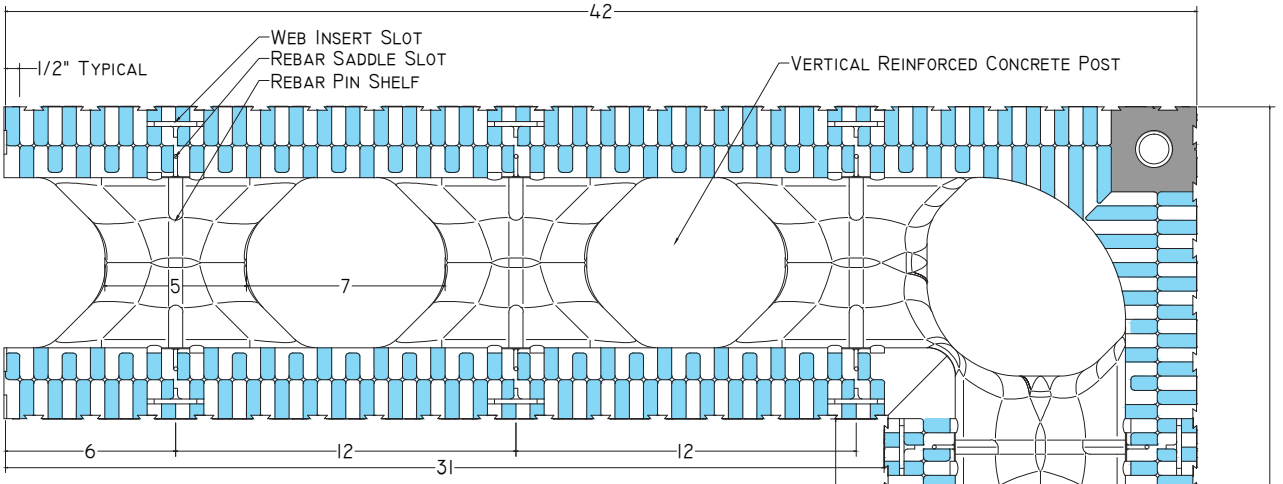

1 Top / Bottom View (Reversible)
Scale: NTS

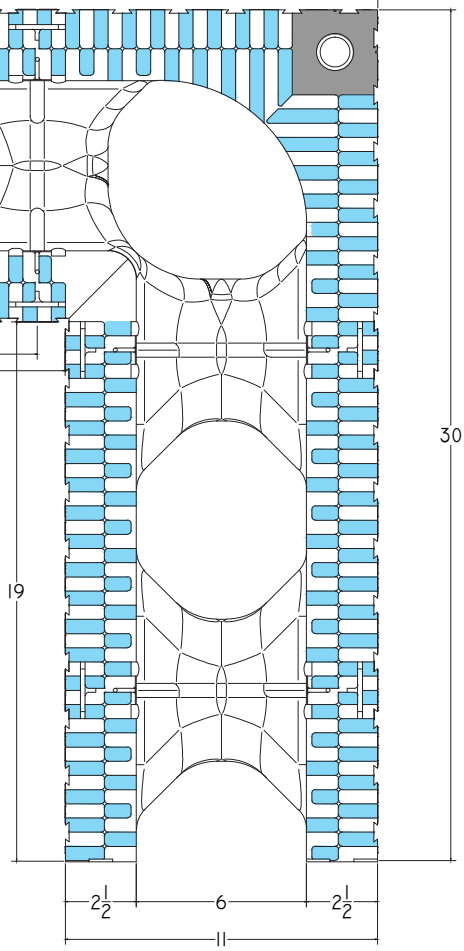

NOTE:
Form is reversible, both horizontally and vertically.
Blocks stack @ 1'-4" (16") increments.

4 Dovetail Detail
Scale: NTS

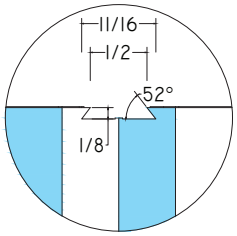

LEGEND:
■ = Positive profiles (tongues)
□ = Negative profiles (grooves)

2 Front View
Scale: NTS

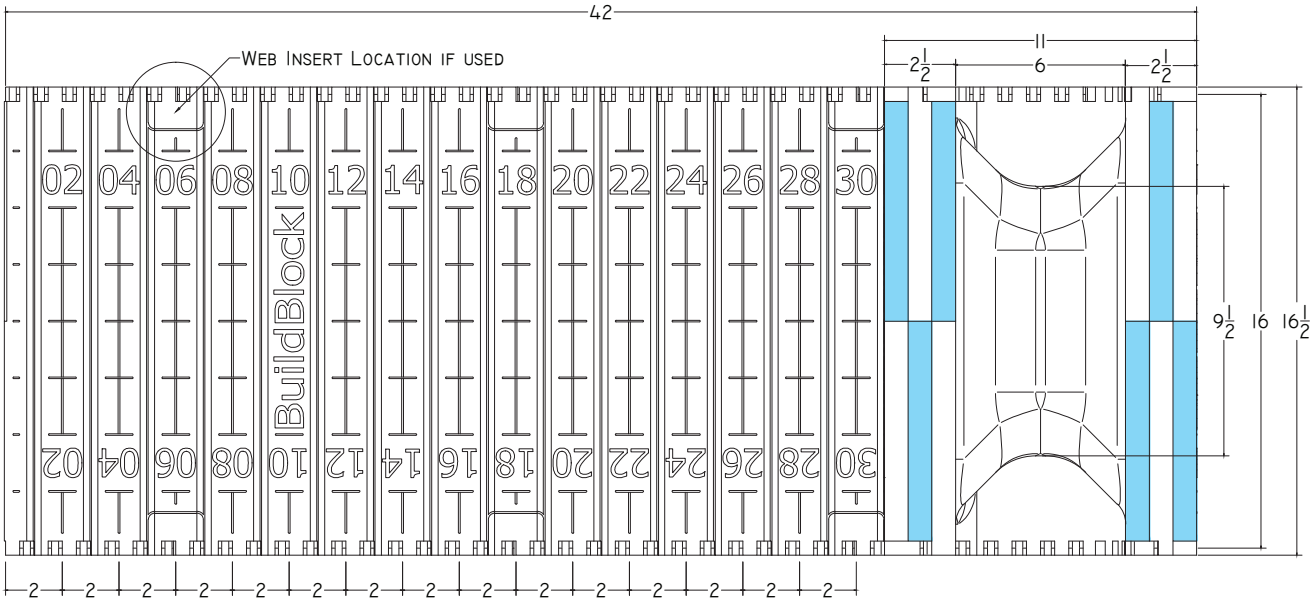

BuildBlock® BUILDING SYSTEMS

9705 N. BROADWAY EXTENSION, SUITE 200, OKLAHOMA CITY, OK 73114
OFFICE: 405-840-3386 | TOLL FREE: 866-222-2575 | FAX: 831-597-0792
BUILDBLOCK.COM

GLOBALBLOCK ALL FOAM ICF 6" 90° CORNER BLOCK

DATE/REV	9/2015	SCALE	NTS	DETAIL SHEET
NOTES				60F

CONSTRUCTION SHALL BE IN ACCORDANCE WITH ALL APPLICABLE LOCAL AND NATIONAL CODES. ALL DRAWINGS ARE SUBJECT TO CHANGE WITHOUT NOTICE.

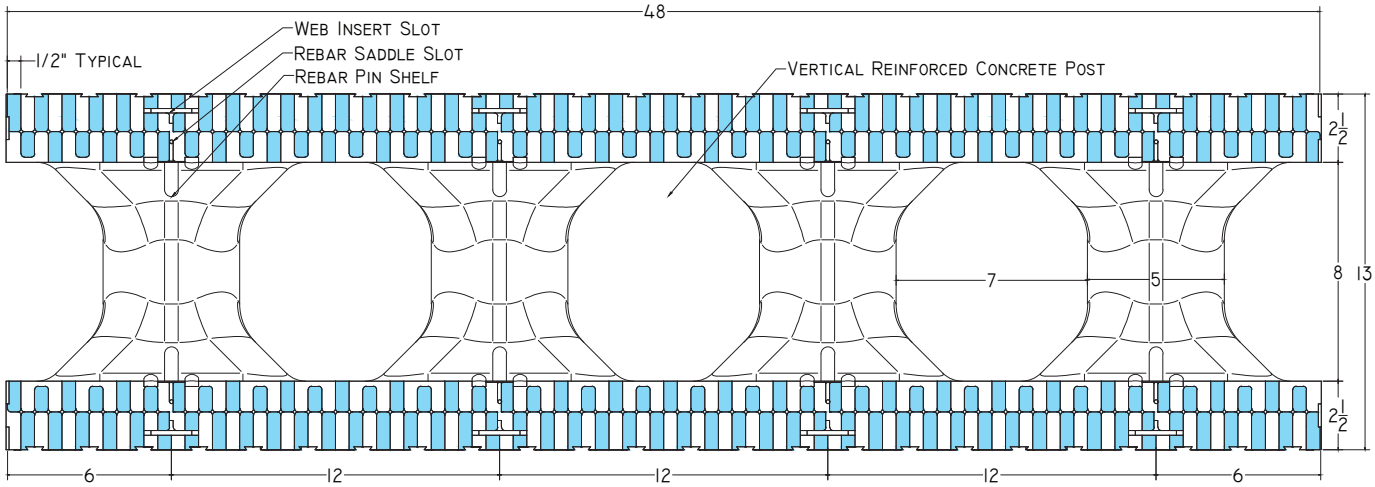

1 Top / Bottom View (Reversible)
Scale: NTS

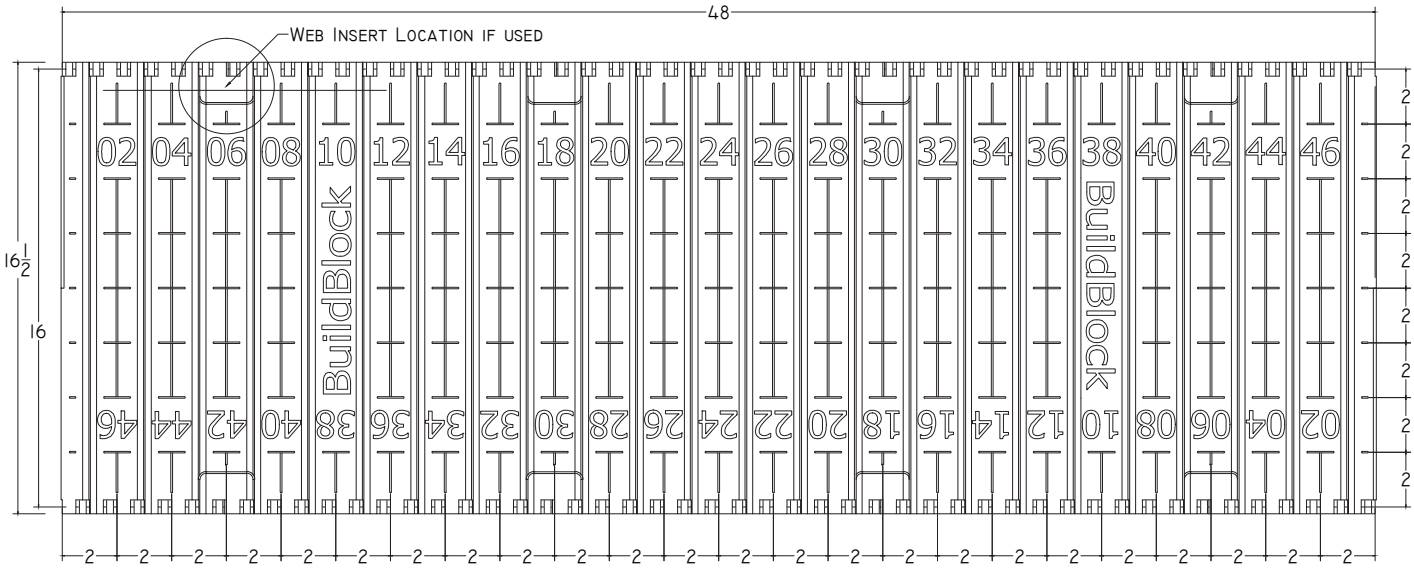

2 Front View
Scale: NTS

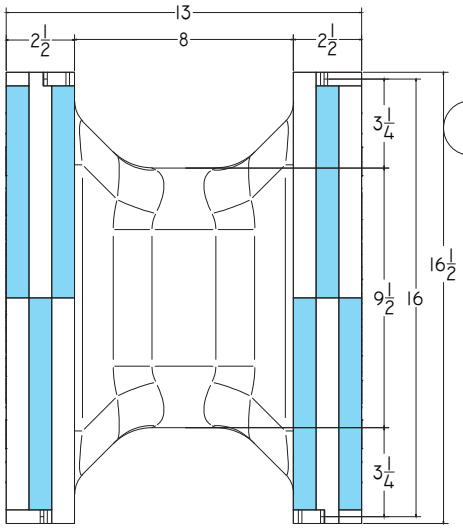

3 Side View
Scale: NTS

4 Dovetail Detail
Scale: NTS

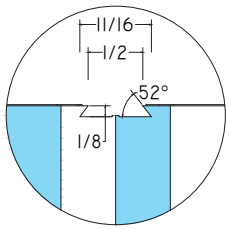

NOTE:
Form is reversible, both horizontally and vertically.
Blocks stack @ 1'-4" (16") increments.

LEGEND:
■ = Positive profiles (tongues)
□ = Negative profiles (grooves)

BuildBlock® BUILDING SYSTEMS

9705 N. BROADWAY EXTENSION, SUITE 200, OKLAHOMA CITY, OK 73114
OFFICE: 405-840-3386 | TOLL FREE: 866-222-2575 | FAX: 831-597-0792
BUILDBLOCK.COM

GLOBALBLOCK ALL FOAM ICF 8" STRAIGHT BLOCK

DATE/REV	9/2015	SCALE	NTS	DETAIL SHEET
NOTES				60G

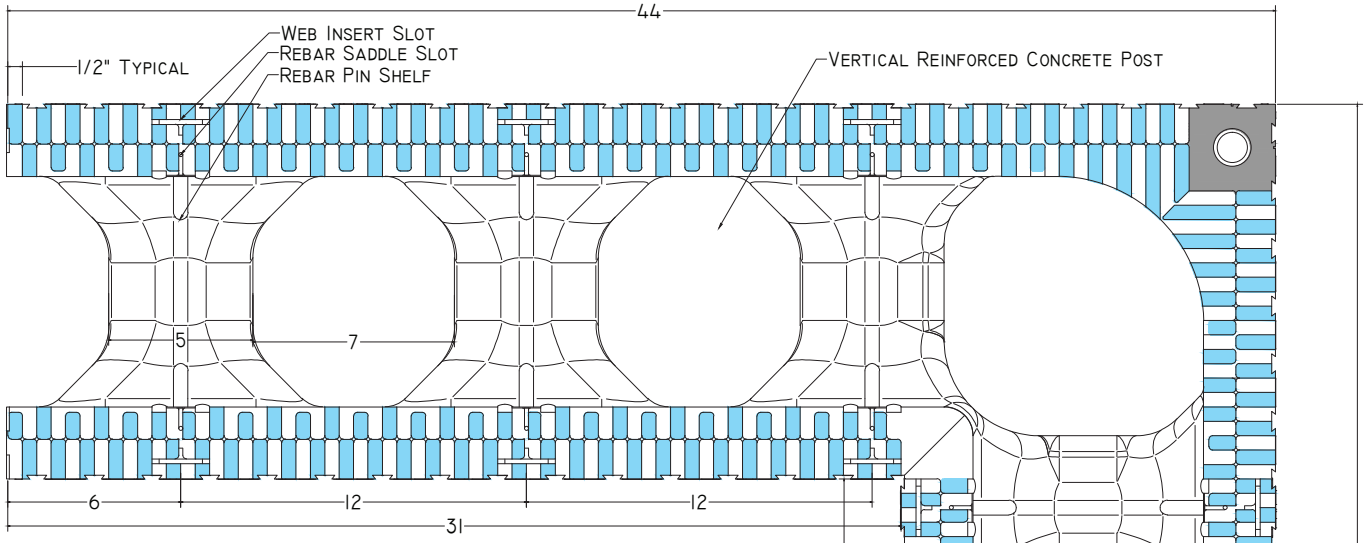

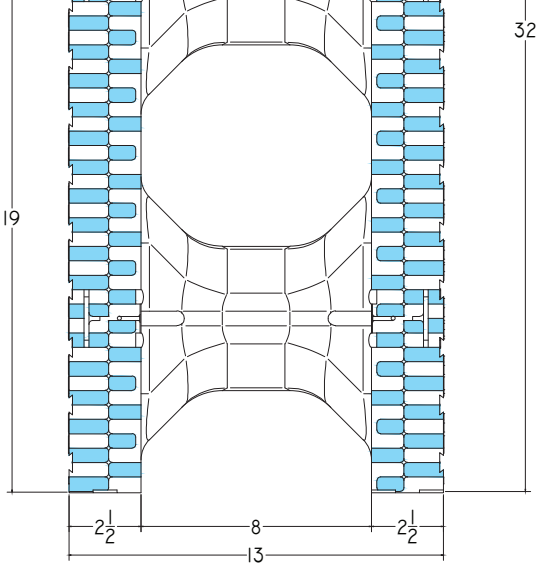

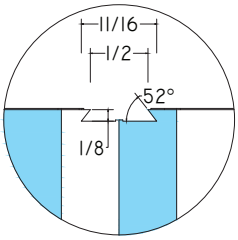

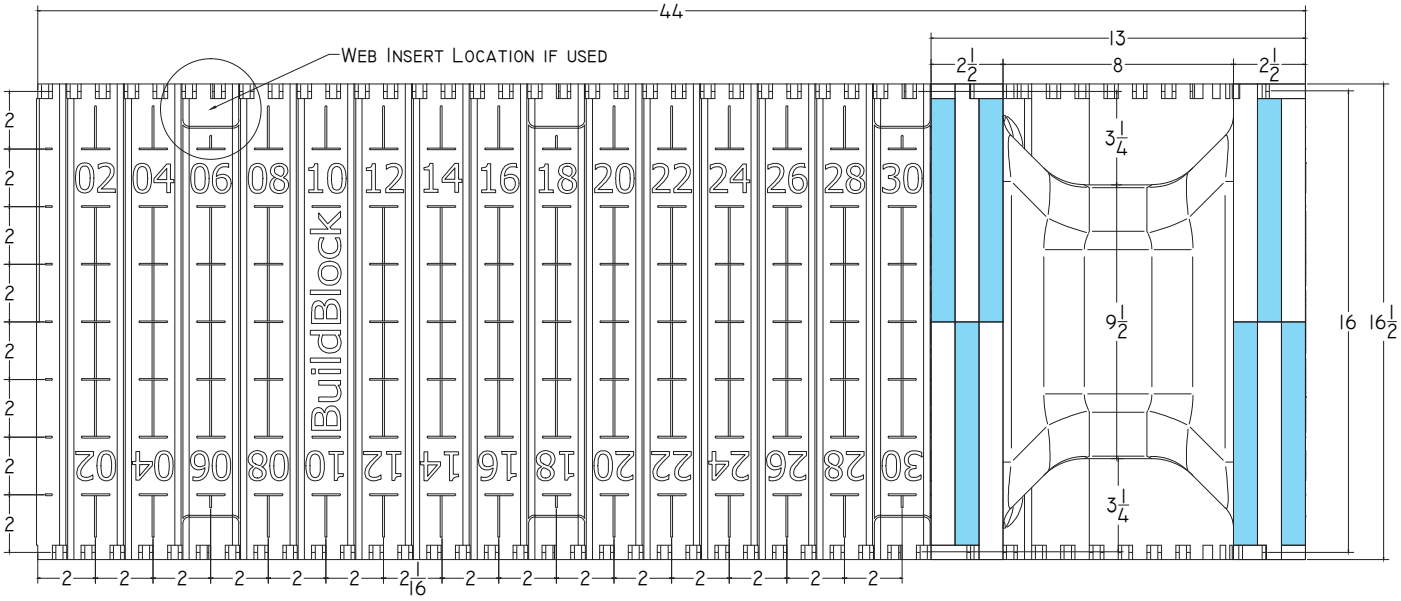

1 TOP / BOTTOM VIEW (REVERSIBLE)
SCALE: NTS

NOTE:
FORM IS REVERSIBLE, BOTH HORIZONTALLY AND VERTICALLY.
BLOCKS STACK @ 1'-4" (16") INCREMENTS.

4 DOVETAIL DETAIL
SCALE: NTS

LEGEND:
- 🟦 = POSITIVE PROFILES (TONGUES)
- ☐ = NEGATIVE PROFILES (GROOVES)

2 FRONT VIEW
SCALE: NTS

BuildBlock BUILDING SYSTEMS

9705 N. BROADWAY EXTENSION, SUITE 200, OKLAHOMA CITY, OK 73114
OFFICE: 405-840-3386 | TOLL FREE: 866-222-2575 | FAX: 831-597-0792
BUILDBLOCK.COM

GLOBALBLOCK ALL FOAM ICF 8" 90° CORNER BLOCK

DATE/REV	9/2015	SCALE	NTS	DETAIL SHEET
NOTES				60H

CONSTRUCTION SHALL BE IN ACCORDANCE WITH ALL APPLICABLE LOCAL AND NATIONAL CODES. ALL DRAWINGS ARE SUBJECT TO CHANGE WITHOUT NOTICE.

GlobalBlock Web Inserts

1 GBW-300
Scale: NTS

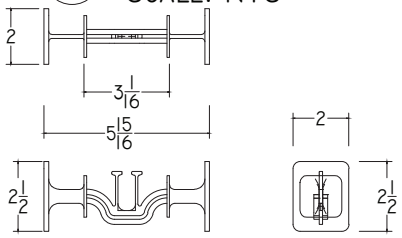

2 GBW-400
Scale: NTS

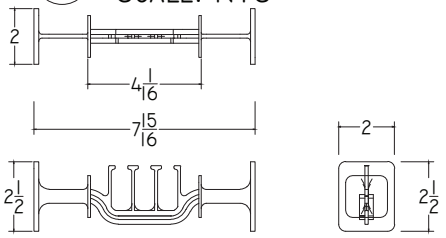

3 GBW-600
Scale: NTS

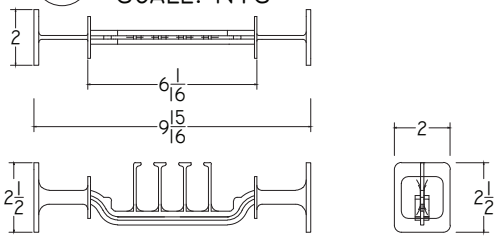

4 GBW-800
Scale: NTS

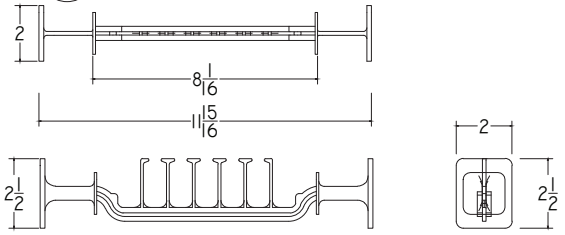

GlobalBlock Starter Inserts

5 GBW-300S
Scale: NTS

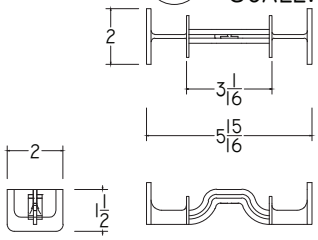

6 GBW-400S
Scale: NTS

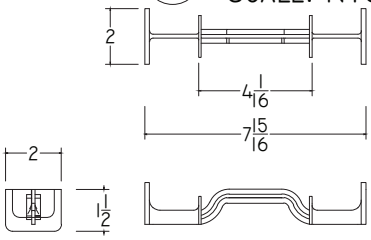

7 GBW-600S
Scale: NTS

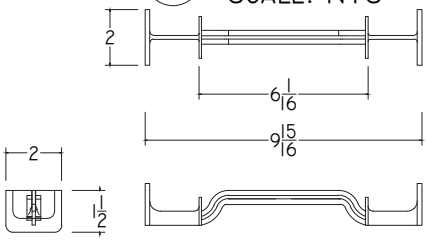

8 GBW-800S
Scale: NTS

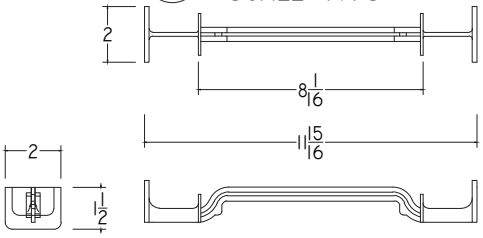

BuildBlock® BUILDING SYSTEMS

9705 N. BROADWAY EXTENSION, SUITE 200, OKLAHOMA CITY, OK 73114
OFFICE: 405-840-3386 | TOLL FREE: 866-222-2575 | FAX: 831-597-0792
BUILDBLOCK.COM

GLOBALBLOCK WEB INSERTS DETAIL

DATE/REV	9/2015	SCALE	NTS	DETAIL SHEET
NOTES				601

GlobalBlock Rebar Saddles

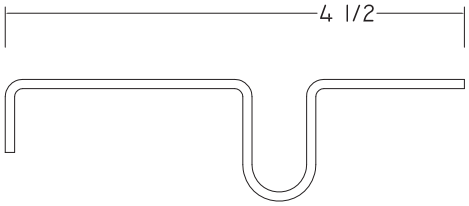

Slot to hold up to
(2) #4 Bars

1 GB-300RS
Scale: NTS

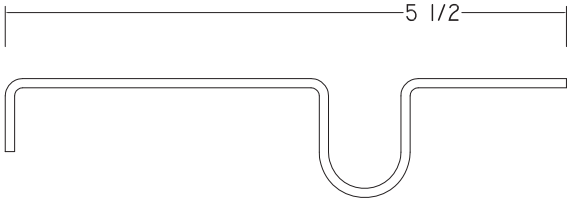

Slot to hold up to
(2) #5 Bars

2 GBW-400RS
Scale: NTS

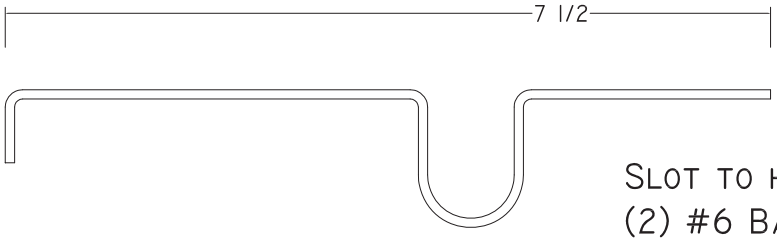

Slot to hold up to
(2) #6 Bars

3 GBW-600RS
Scale: NTS

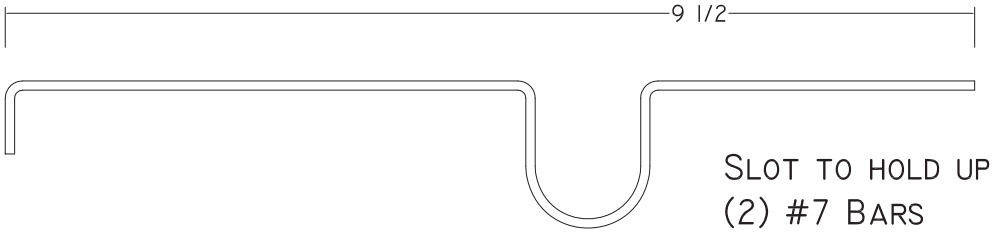

Slot to hold up to
(2) #7 Bars

4 GBW-800RS
Scale: NTS

BuildBlock® BUILDING SYSTEMS

9705 N. BROADWAY EXTENSION, SUITE 200, OKLAHOMA CITY, OK 73114
OFFICE: 405-840-3386 | TOLL FREE: 866-222-2575 | FAX: 831-597-0792
BUILDBLOCK.COM

GLOBALBLOCK REBAR SADDLE DETAIL

DATE/REV	9/2015	SCALE	NTS	DETAIL SHEET
NOTES				60J

GlobalBlock Reinforcement Options:
See individual details for placement and notes.

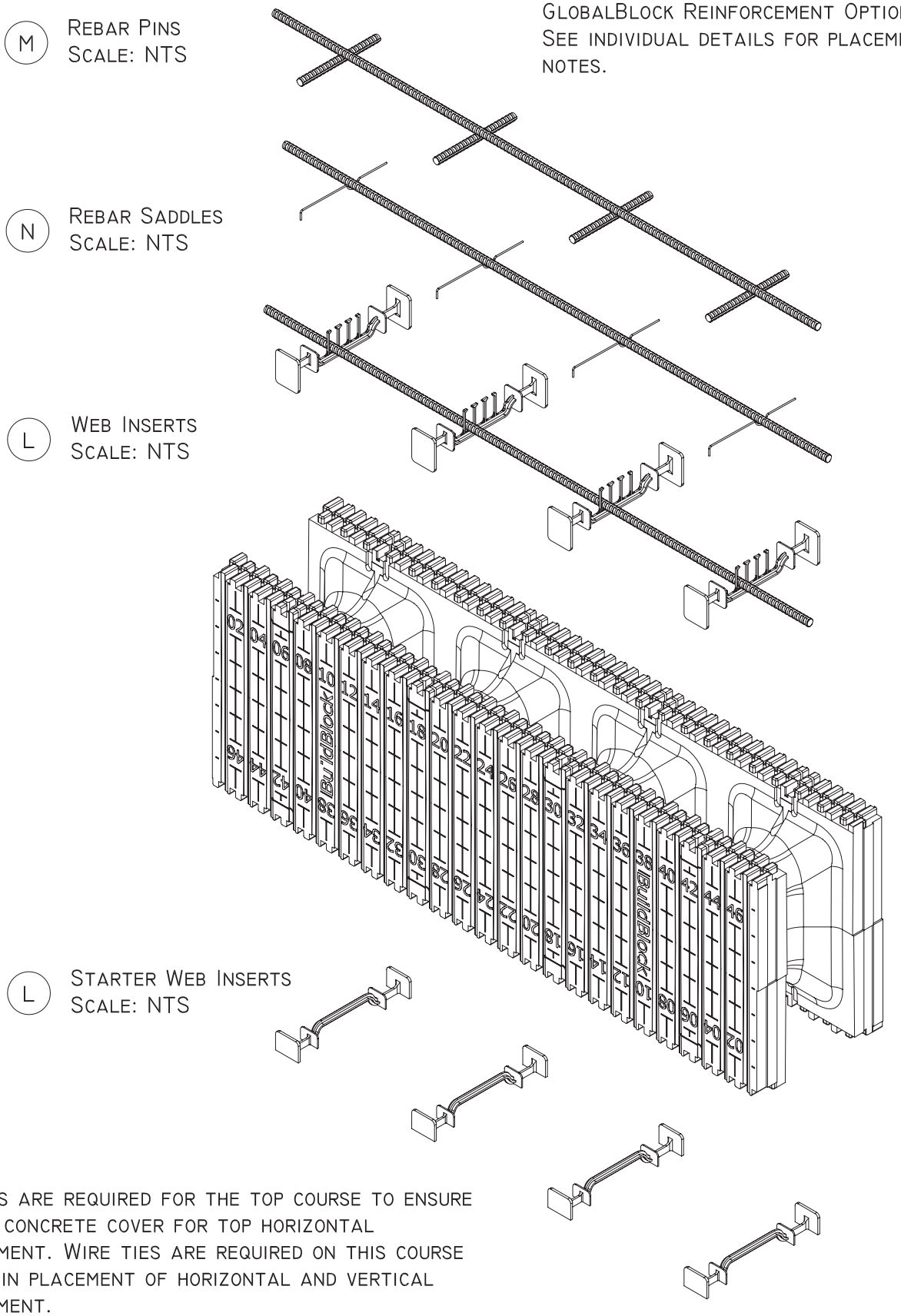

Rebar pins are required for the top course to ensure adequate concrete cover for top horizontal reinforcement. Wire ties are required on this course to maintain placement of horizontal and vertical reinforcement.

BuildBlock BUILDING SYSTEMS	GLOBALBLOCK COMBINED REINFORCEMENT OPTIONS			
	DATE/REV 9/2015	SCALE	NTS	DETAIL SHEET
	NOTES			60K
9705 N. BROADWAY EXTENSION, SUITE 200, OKLAHOMA CITY, OK 73114 OFFICE: 405-840-3386 | TOLL FREE: 866-222-2575 | FAX: 831-597-0792 BUILDBLOCK.COM	CONSTRUCTION SHALL BE IN ACCORDANCE WITH ALL APPLICABLE LOCAL AND NATIONAL CODES. ALL DRAWINGS ARE SUBJECT TO CHANGE WITHOUT NOTICE.			

Web inserts provide rebar support and wall finish attachment points for GlobalBlock ICF walls.
Web inserts are placed into the molded slots during stacking. Alternate rebar positions each course to create a chase for vertical steel reinforcement, placed after stacking, per engineering guidelines.

Optional:
When not using web inserts as attachment points, it is permissable to use only 2 inserts per form for steel reinforcement.
It is recommended to space evenly, every other slot.

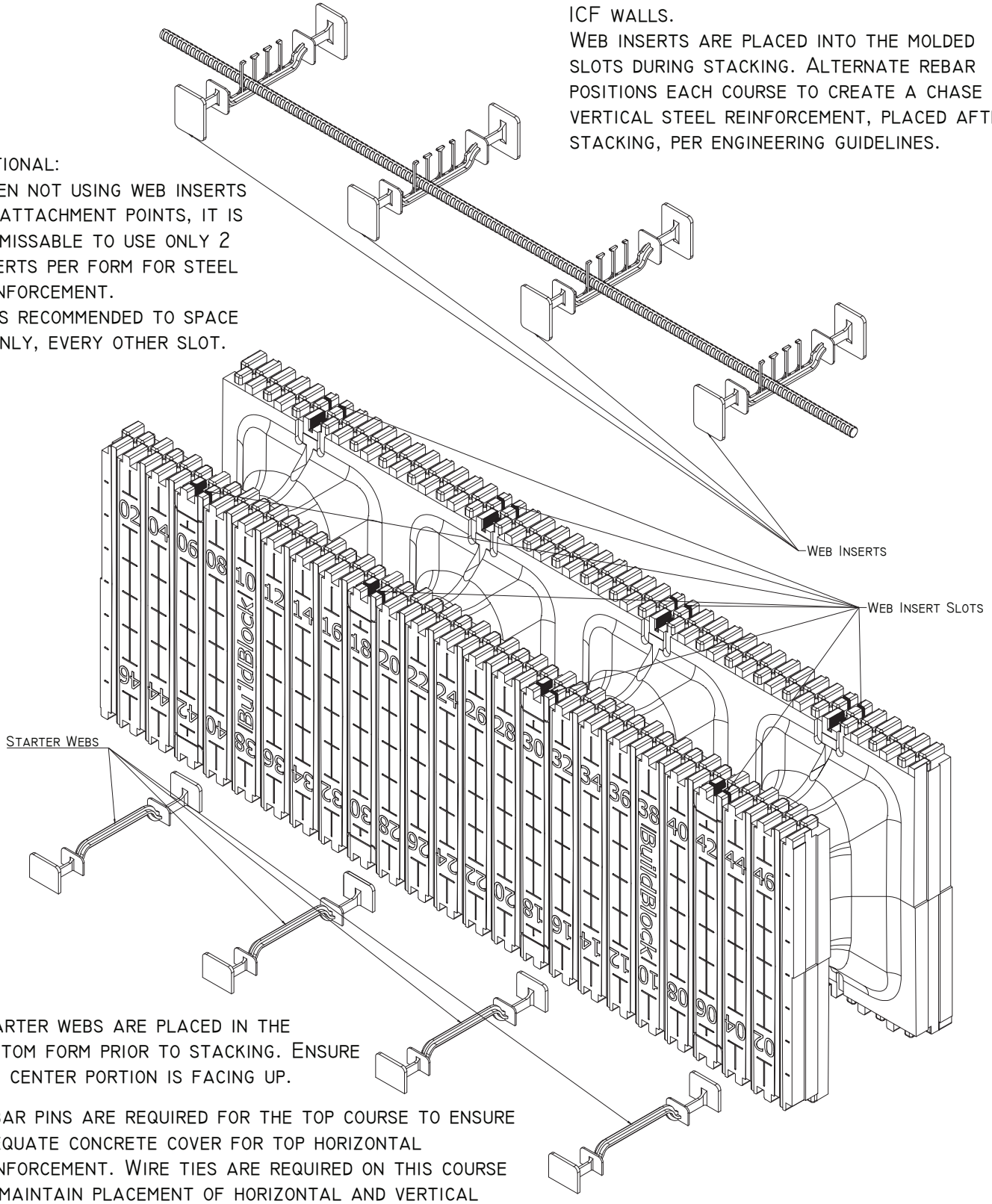

Starter webs are placed in the bottom form prior to stacking. Ensure the center portion is facing up.

Rebar pins are required for the top course to ensure adequate concrete cover for top horizontal reinforcement. Wire ties are required on this course to maintain placement of horizontal and vertical reinforcement.

BuildBlock BUILDING SYSTEMS

9705 N. BROADWAY EXTENSION, SUITE 200, OKLAHOMA CITY, OK 73114
OFFICE: 405-840-3386 | TOLL FREE: 866-222-2575 | FAX: 831-597-0792
BUILDBLOCK.COM

GLOBALBLOCK USING PLASTIC WEB INSERTS

DATE/REV	9/2015	SCALE	NTS	DETAIL SHEET
NOTES				60L

CONSTRUCTION SHALL BE IN ACCORDANCE WITH ALL APPLICABLE LOCAL AND NATIONAL CODES. ALL DRAWINGS ARE SUBJECT TO CHANGE WITHOUT NOTICE.

Rebar pins are the simplest means of supporting horizontal rebar in GlobalBlock ICFs. #3 or #4 pins are cut to length (1/4" less than nominal form width) and placed into the molded slots. The horizontal bars are then placed directly onto the pins. Wire ties are required to maintain placement of horizontal and vertical reinforcement.

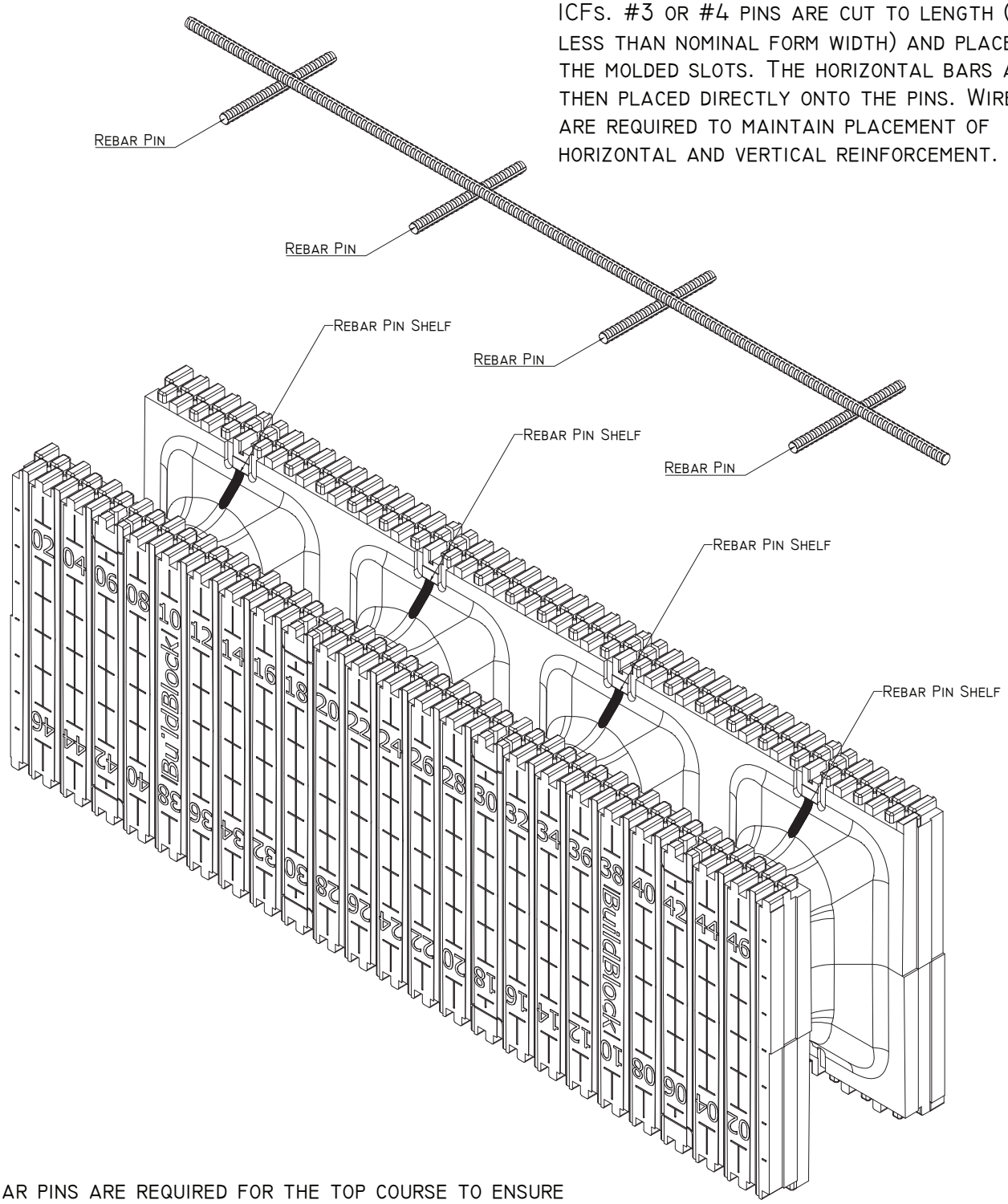

Rebar pins are required for the top course to ensure adequate concrete cover for top horizontal reinforcement. Wire ties are required on this course to maintain placement of horizontal and vertical reinforcement.

BuildBlock BUILDING SYSTEMS

9705 N. BROADWAY EXTENSION, SUITE 200, OKLAHOMA CITY, OK 73114
OFFICE: 405-840-3386 | TOLL FREE: 866-222-2575 | FAX: 831-597-0792
BUILDBLOCK.COM

GLOBALBLOCK USING REBAR PINS

DATE/REV	9/2015	SCALE	NTS	DETAIL SHEET
NOTES				60M

CONSTRUCTION SHALL BE IN ACCORDANCE WITH ALL APPLICABLE LOCAL AND NATIONAL CODES. ALL DRAWINGS ARE SUBJECT TO CHANGE WITHOUT NOTICE.

GlobalBlock Rebar Saddles provide a simple means of supporting rebar, without ties, near the center of the beam, while also permitting the bars to be offset stacked to create a chase for vertical steel. Use saddles when finishing the wall with Buildcrete stucco or plaster, or where mechanical attachment is not required for the finish.

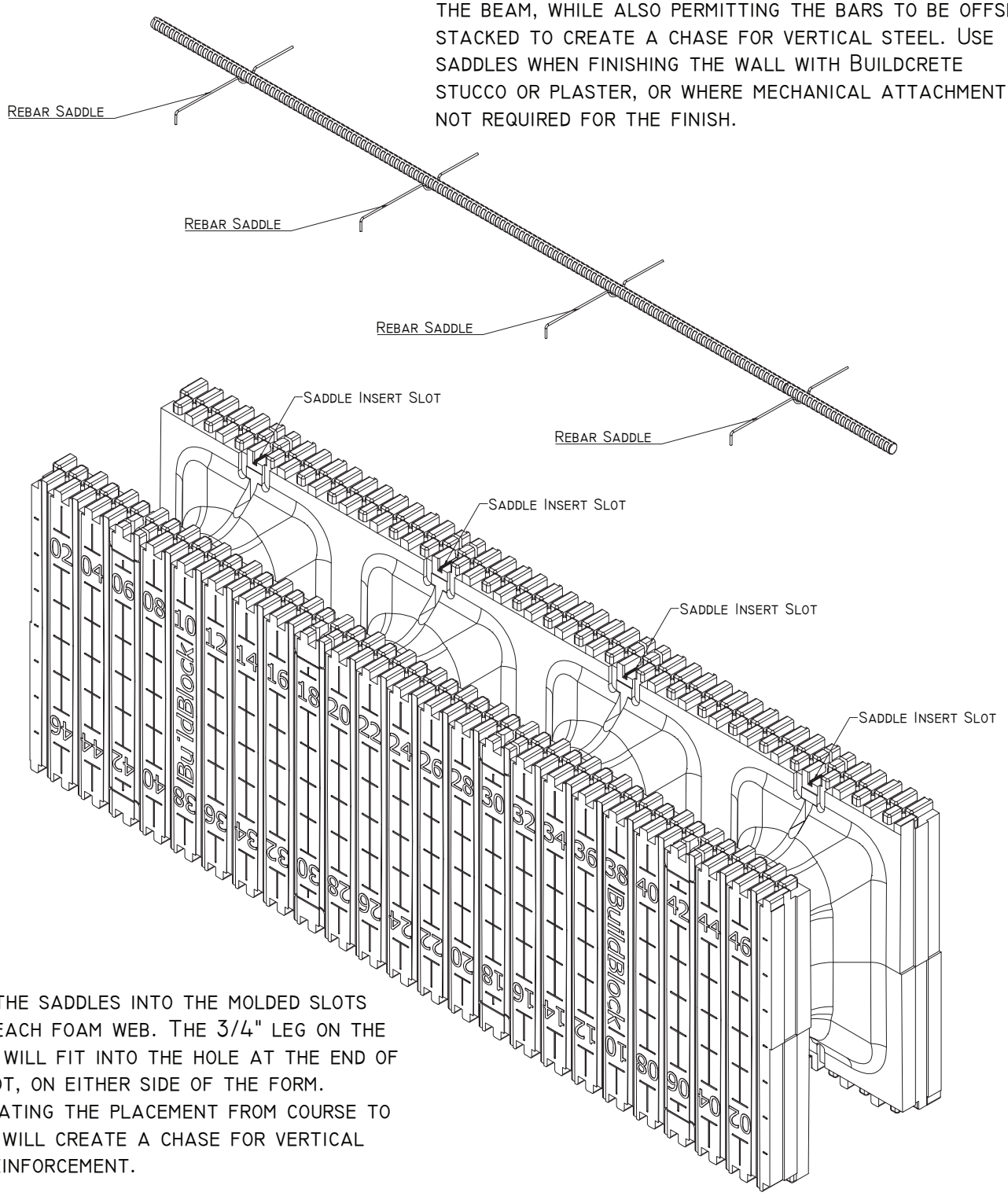

Place the saddles into the molded slots above each foam web. The 3/4" leg on the saddle will fit into the hole at the end of the slot, on either side of the form. Alternating the placement from course to course will create a chase for vertical post reinforcement.

Rebar pins are required for the top course to ensure adequate concrete cover for top horizontal reinforcement. Wire ties are required on this course to maintain placement of horizontal and vertical reinforcement.

BuildBlock BUILDING SYSTEMS	GLOBALBLOCK USING REBAR SADDLES				
	DATE/REV	9/2015	SCALE	NTS	DETAIL SHEET
	NOTES				60N
9705 N. BROADWAY EXTENSION, SUITE 200, OKLAHOMA CITY, OK 73114 OFFICE: 405-840-3386 | TOLL FREE: 866-222-2575 | FAX: 831-597-0792 BUILDBLOCK.COM	CONSTRUCTION SHALL BE IN ACCORDANCE WITH ALL APPLICABLE LOCAL AND NATIONAL CODES. ALL DRAWINGS ARE SUBJECT TO CHANGE WITHOUT NOTICE.				

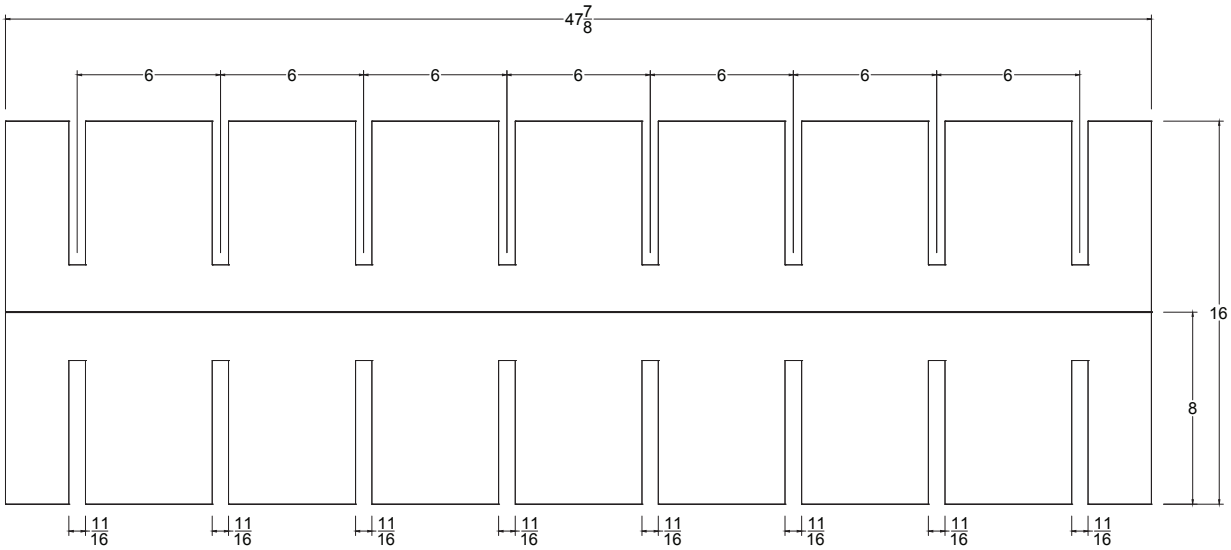

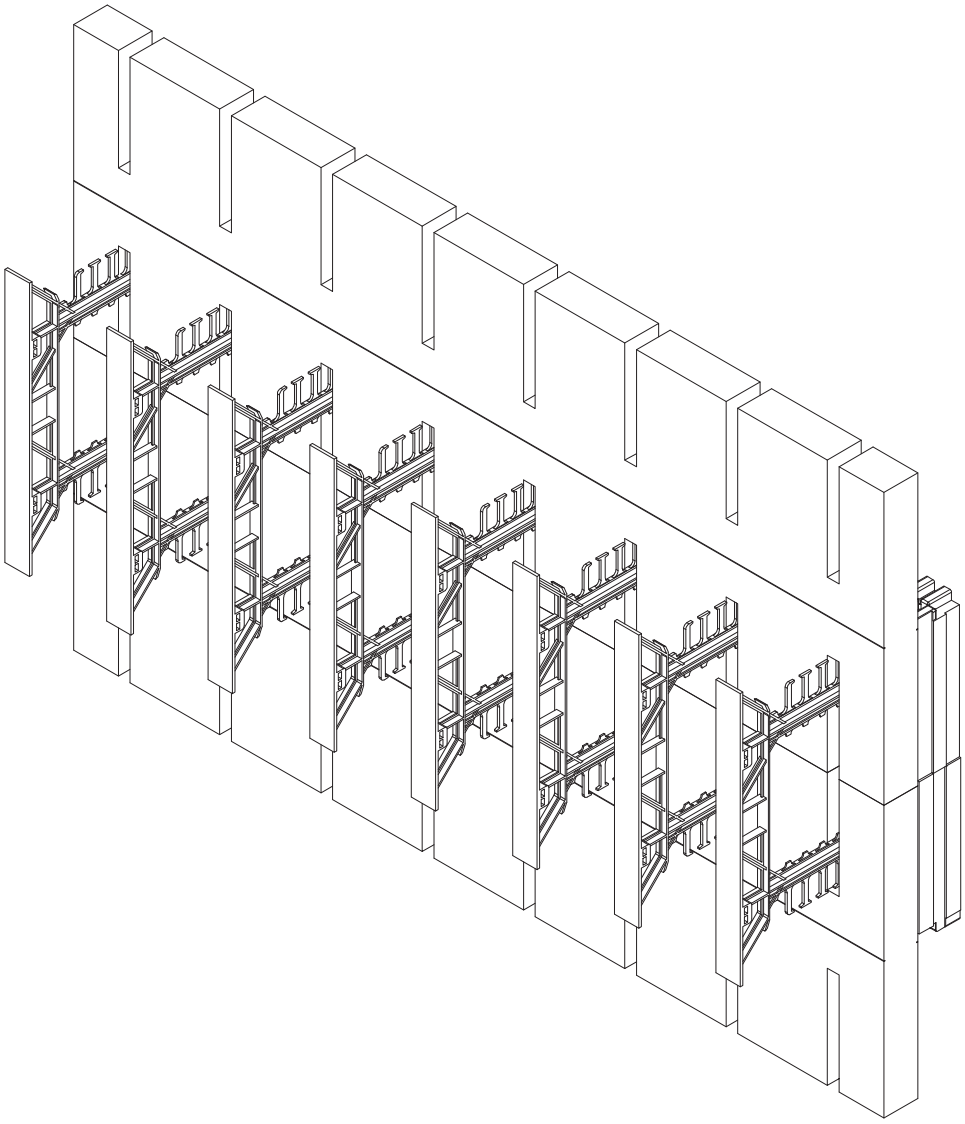

BuildBlock® BUILDING SYSTEMS

THERMALSERT PRODUCT DETAIL

DATE/REV	5/2015	SCALE	NTS	DETAIL SHEET
NOTES				61A

9705 N. BROADWAY EXTENSION, SUITE 200, OKLAHOMA CITY, OK 73114
OFFICE: 405-840-3386 | TOLL FREE: 866-222-2575 | FAX: 831-597-0792
BUILDBLOCK.COM

CONSTRUCTION SHALL BE IN ACCORDANCE WITH ALL APPLICABLE LOCAL AND NATIONAL CODES. ALL DRAWINGS ARE SUBJECT TO CHANGE WITHOUT NOTICE.

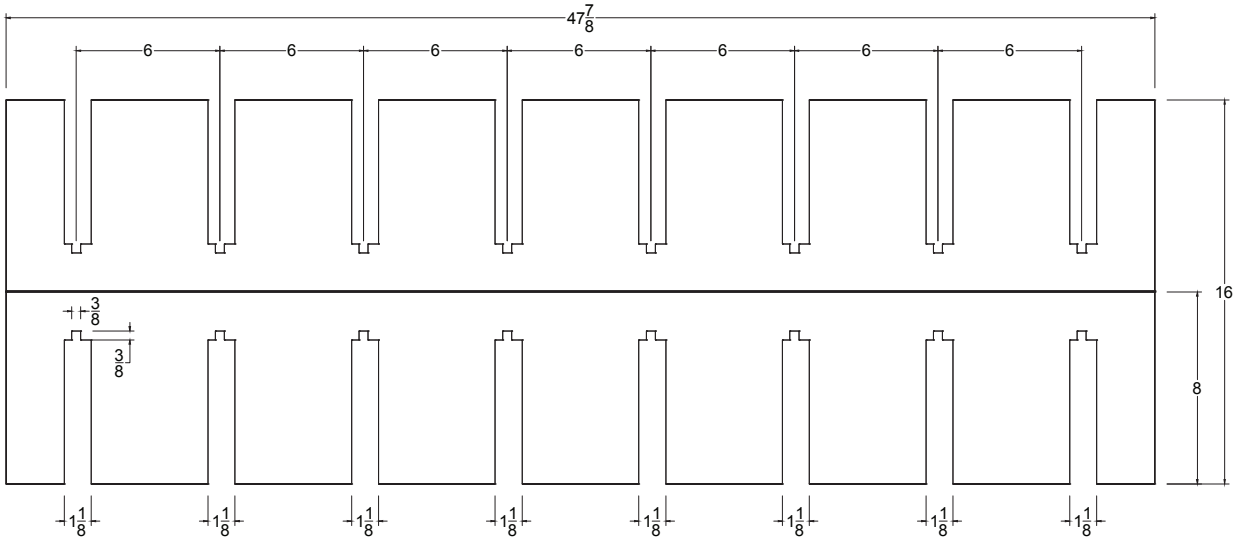

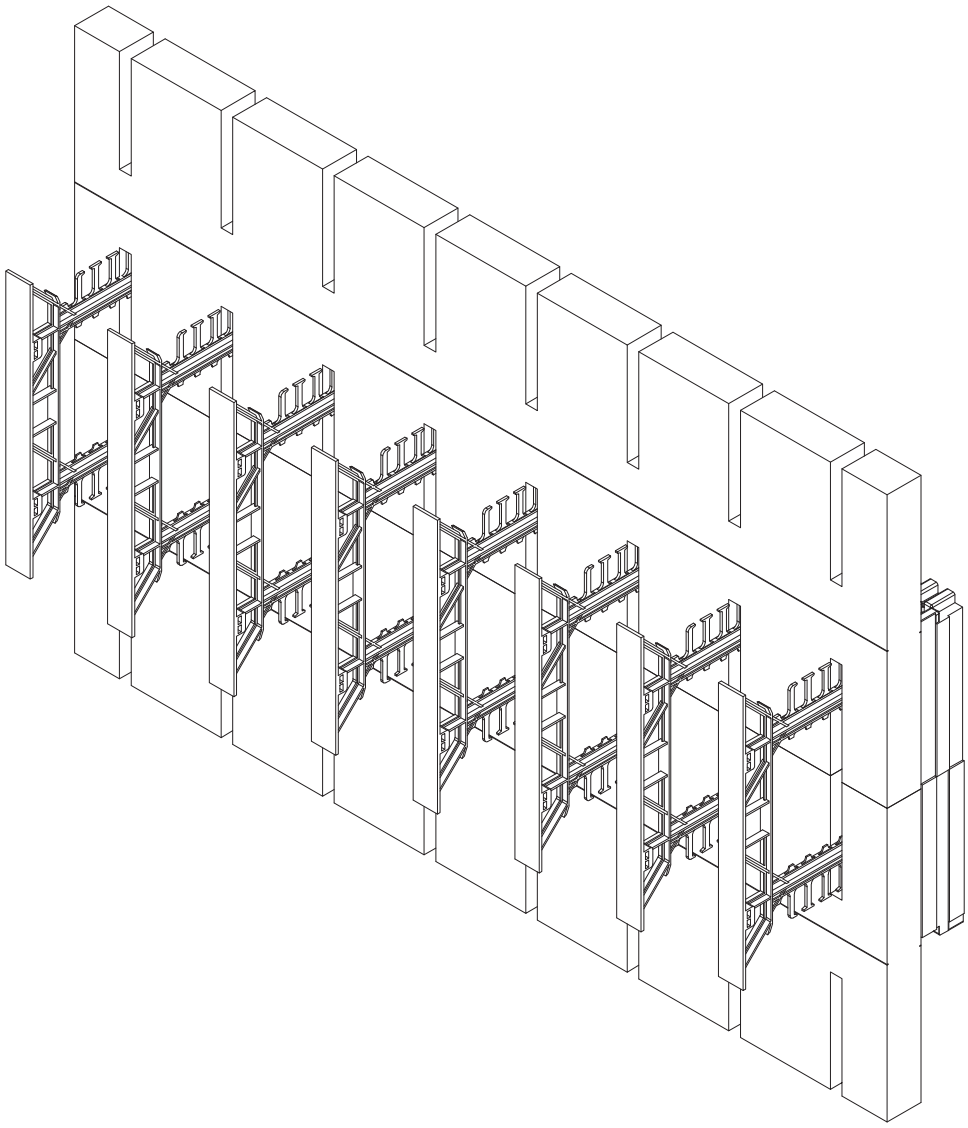

BuildBlock® BUILDING SYSTEMS

THERMALSERT KD PRODUCT DETAIL

DATE/REV	5/2015	SCALE	NTS	DETAIL SHEET
NOTES				61B

9705 N. BROADWAY EXTENSION, SUITE 200, OKLAHOMA CITY, OK 73114
OFFICE: 405-840-3386 | TOLL FREE: 866-222-2575 | FAX: 831-597-0792
BUILDBLOCK.COM

CONSTRUCTION SHALL BE IN ACCORDANCE WITH ALL APPLICABLE LOCAL AND NATIONAL CODES. ALL DRAWINGS ARE SUBJECT TO CHANGE WITHOUT NOTICE.

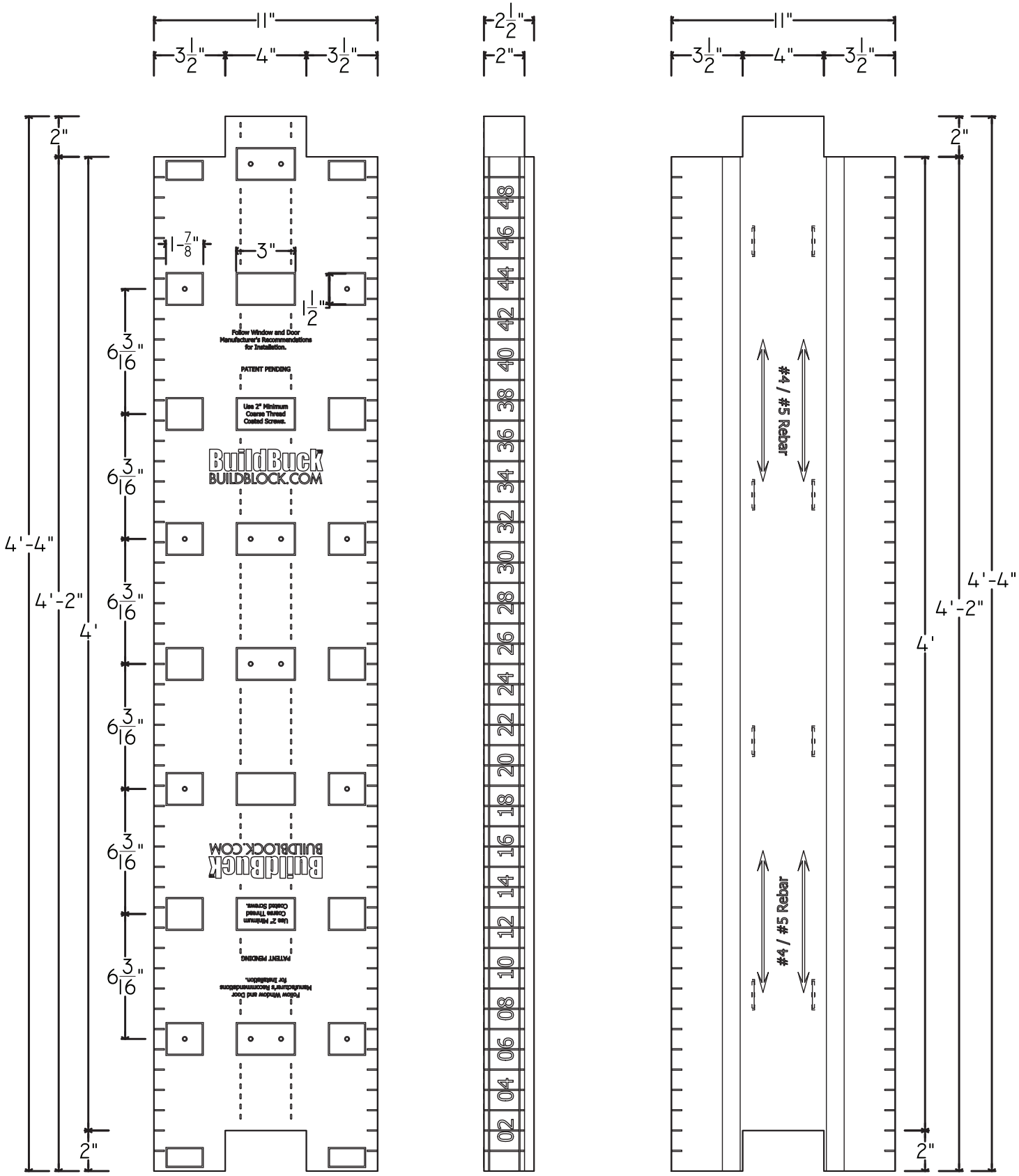

BuildBlock BUILDING SYSTEMS

9705 N. BROADWAY EXTENSION, SUITE 200, OKLAHOMA CITY, OK 73114
OFFICE: 405-840-3386 | TOLL FREE: 866-222-2575 | FAX: 831-597-0792
BUILDBLOCK.COM

BUILDBUCK 6" PRODUCT DIMENSIONS

DATE/REV	12/2015	SCALE	NTS	DETAIL SHEET
NOTES				62A

CONSTRUCTION SHALL BE IN ACCORDANCE WITH ALL APPLICABLE LOCAL AND NATIONAL CODES. ALL DRAWINGS ARE SUBJECT TO CHANGE WITHOUT NOTICE.

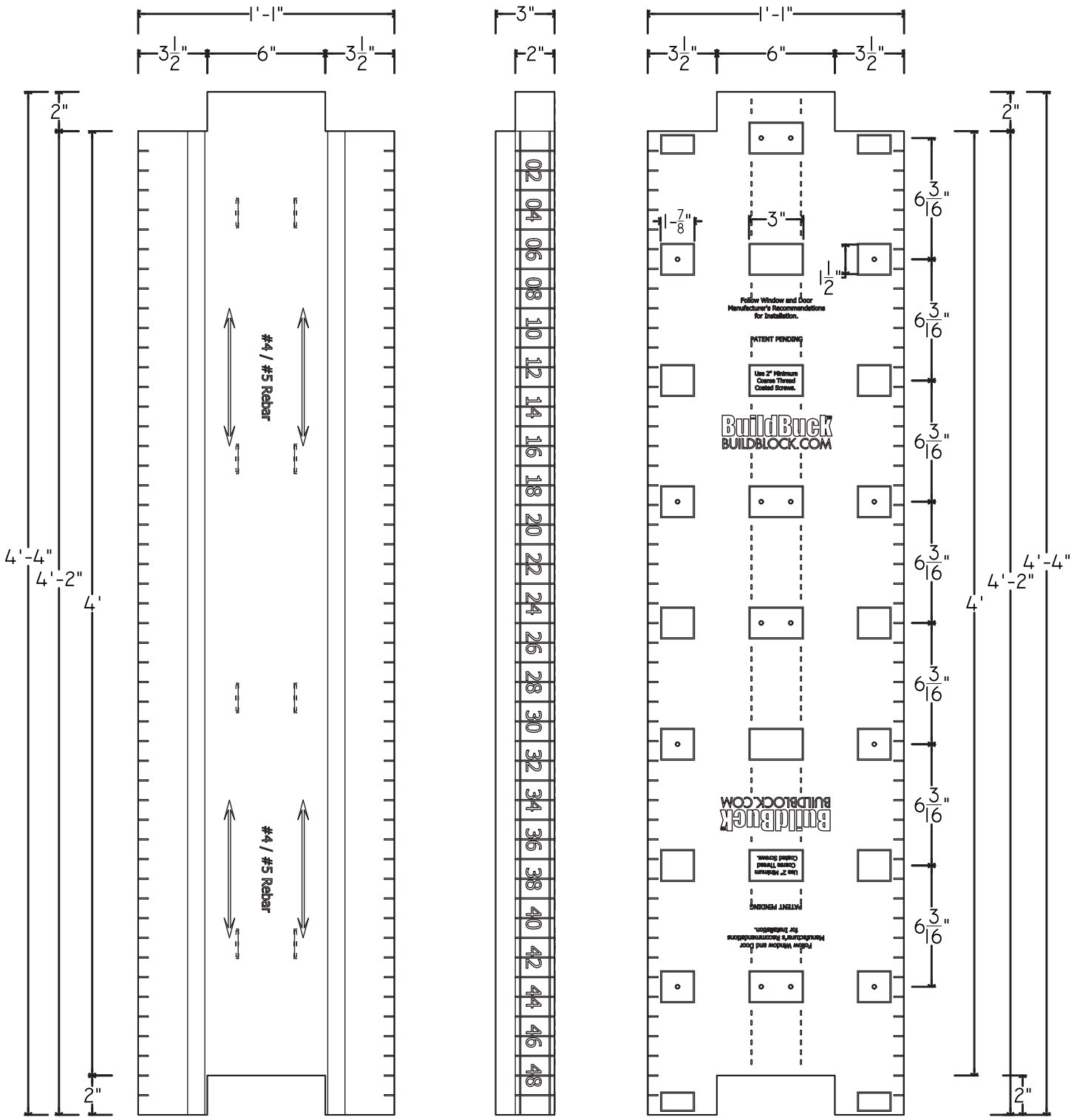

BuildBlock BUILDING SYSTEMS

BUILDBUCK 8" PRODUCT DIMENSIONS

DATE/REV	12/2015	SCALE	NTS	DETAIL SHEET
NOTES				62B

9705 N. BROADWAY EXTENSION, SUITE 200, OKLAHOMA CITY, OK 73114
OFFICE: 405-840-3386 | TOLL FREE: 866-222-2575 | FAX: 831-597-0792
BUILDBLOCK.COM

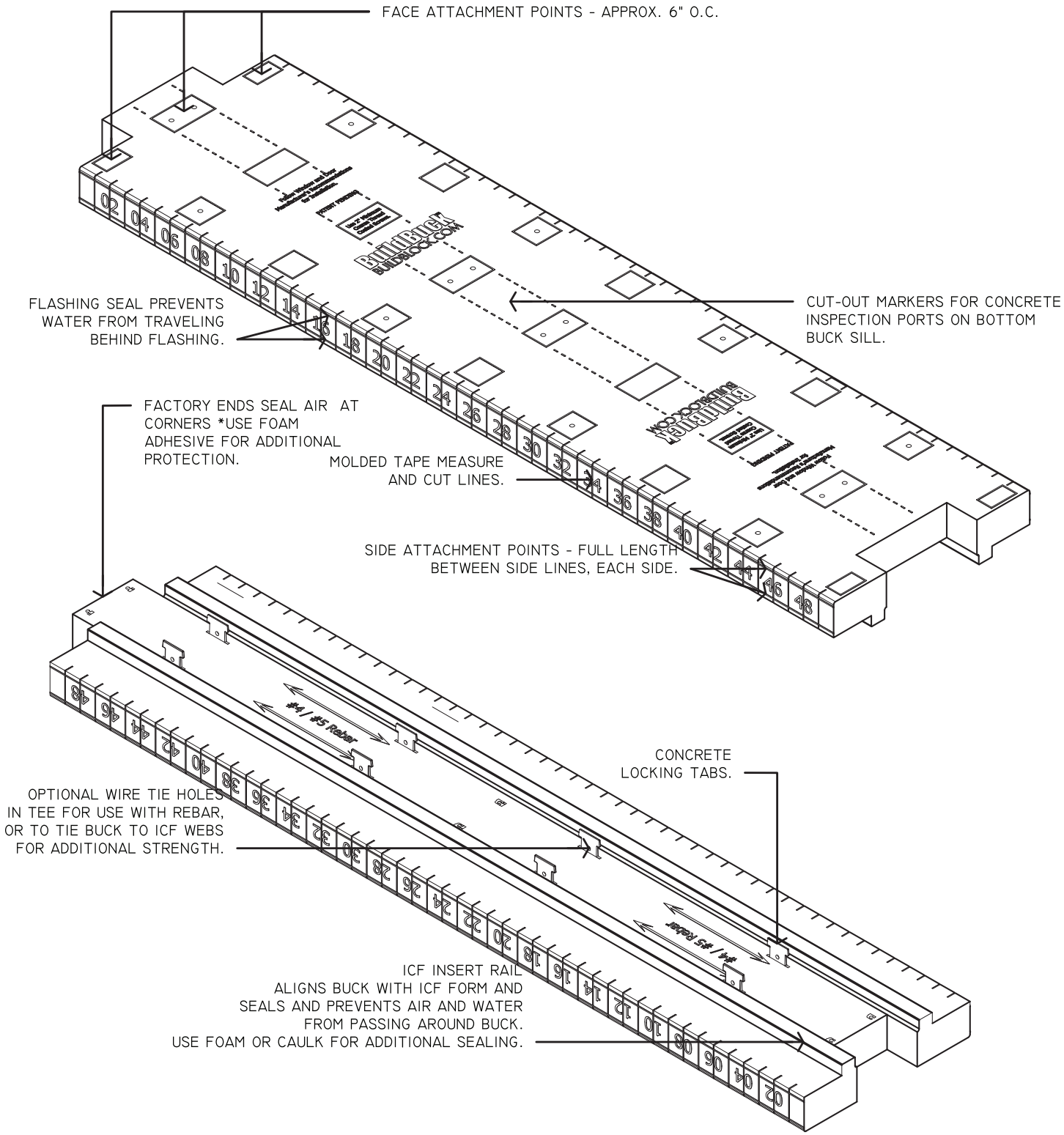

BuildBlock BUILDING SYSTEMS

BUILDBUCK PRODUCT FEATURES

DATE/REV	12/2015	SCALE	NTS	DETAIL SHEET
NOTES				62C

9705 N. BROADWAY EXTENSION, SUITE 200, OKLAHOMA CITY, OK 73114
OFFICE: 405-840-3386 | TOLL FREE: 866-222-2575 | FAX: 831-597-0792
BUILDBLOCK.COM

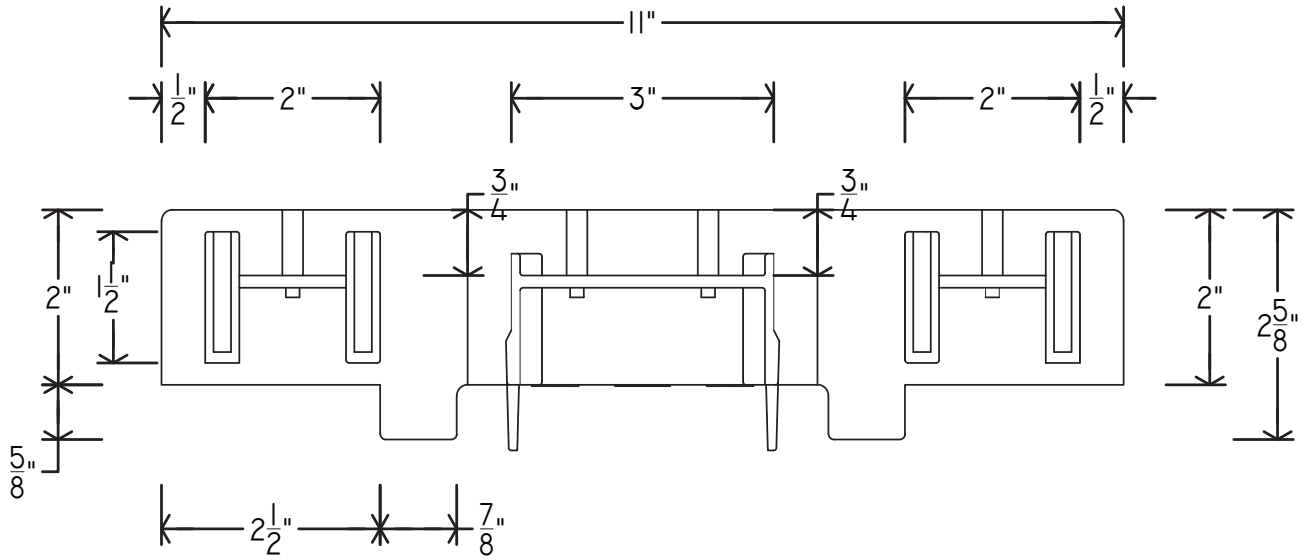

BK-600 6-INCH BUILDBUCK

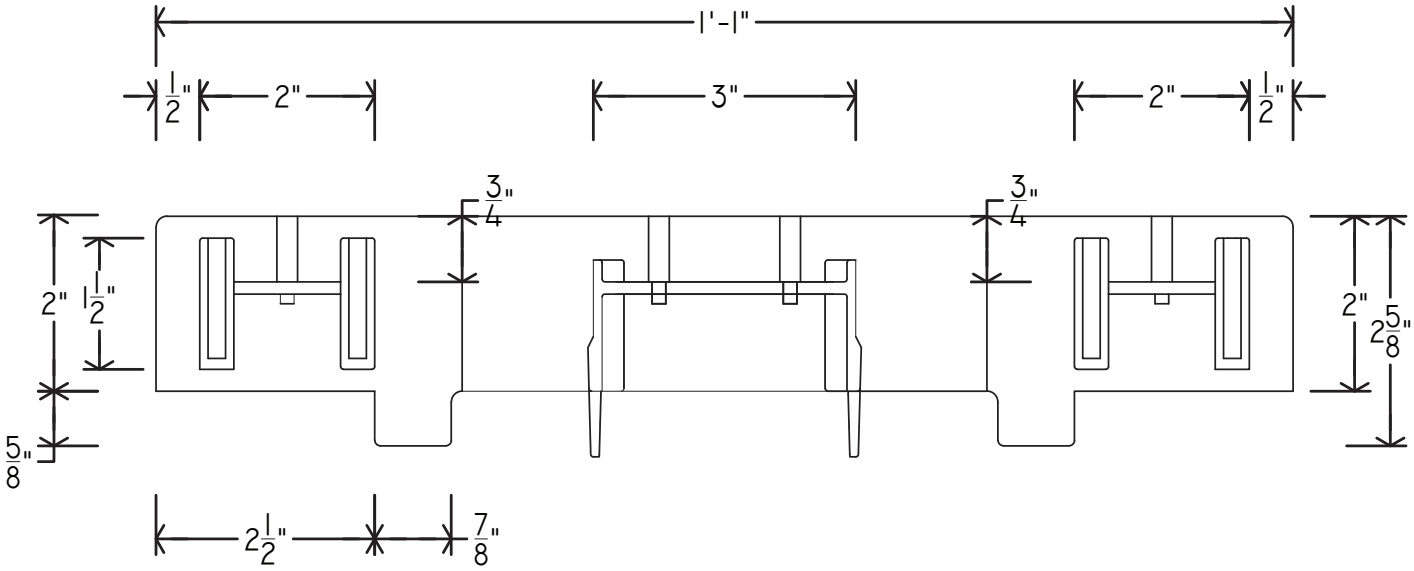

BK-800 8-INCH BUILDBUCK

BuildBlock BUILDING SYSTEMS	BUILDBUCK CROSS SECTIONS BK-600/BK-800			
	DATE/REV 12/2015	SCALE	NTS	DETAIL SHEET
	NOTES			62D
9705 N. BROADWAY EXTENSION, SUITE 200, OKLAHOMA CITY, OK 73114 OFFICE: 405-840-3386 | TOLL FREE: 866-222-2575 | FAX: 831-597-0792 BUILDBLOCK.COM	CONSTRUCTION SHALL BE IN ACCORDANCE WITH ALL APPLICABLE LOCAL AND NATIONAL CODES. ALL DRAWINGS ARE SUBJECT TO CHANGE WITHOUT NOTICE.			

THE DIMENSIONS REPRESENTED BELOW CREATE A FACTORY CONNECTION BETWEEN BUILDBUCK PIECES. WHEN CUTTING BUILDBUCK, IT IS RECOMMENDED TO RE-CUT THE BUILDBUCK PIECES TO RECREATE THE CORRECT FACTORY END AS NEEDED.

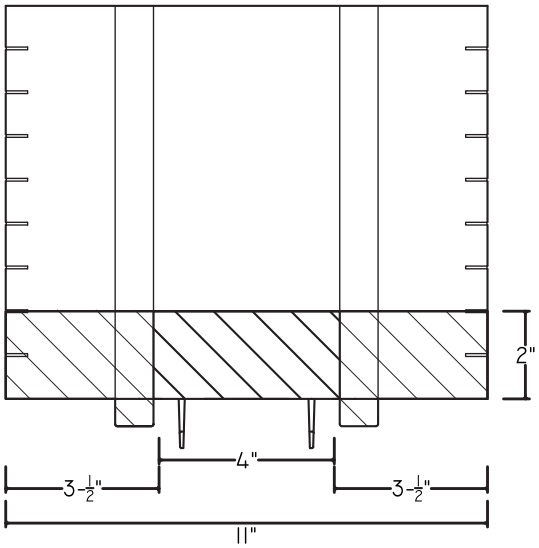

BUILDBUCK CORNER OVERLAP WITH FACTORY EDGE.

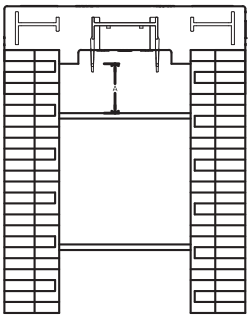

A: WHEN BLOCK IS CUT TO MOLDED VERTICAL CUT LINES, BUILDBUCK WILL CLEAR THE CROSS TIE OF THE WEB. WHEN BLOCK IS CUT THROUGH A WEB VERTICALLY, TRIMMING OF BUILDBUCK MAY BE NECESSARY AS THE BUILDBUCK ALIGNMENT RAILS MAY TOUCH THE WEB FACE.

TOP VIEW BUILDBUCK INSTALLED

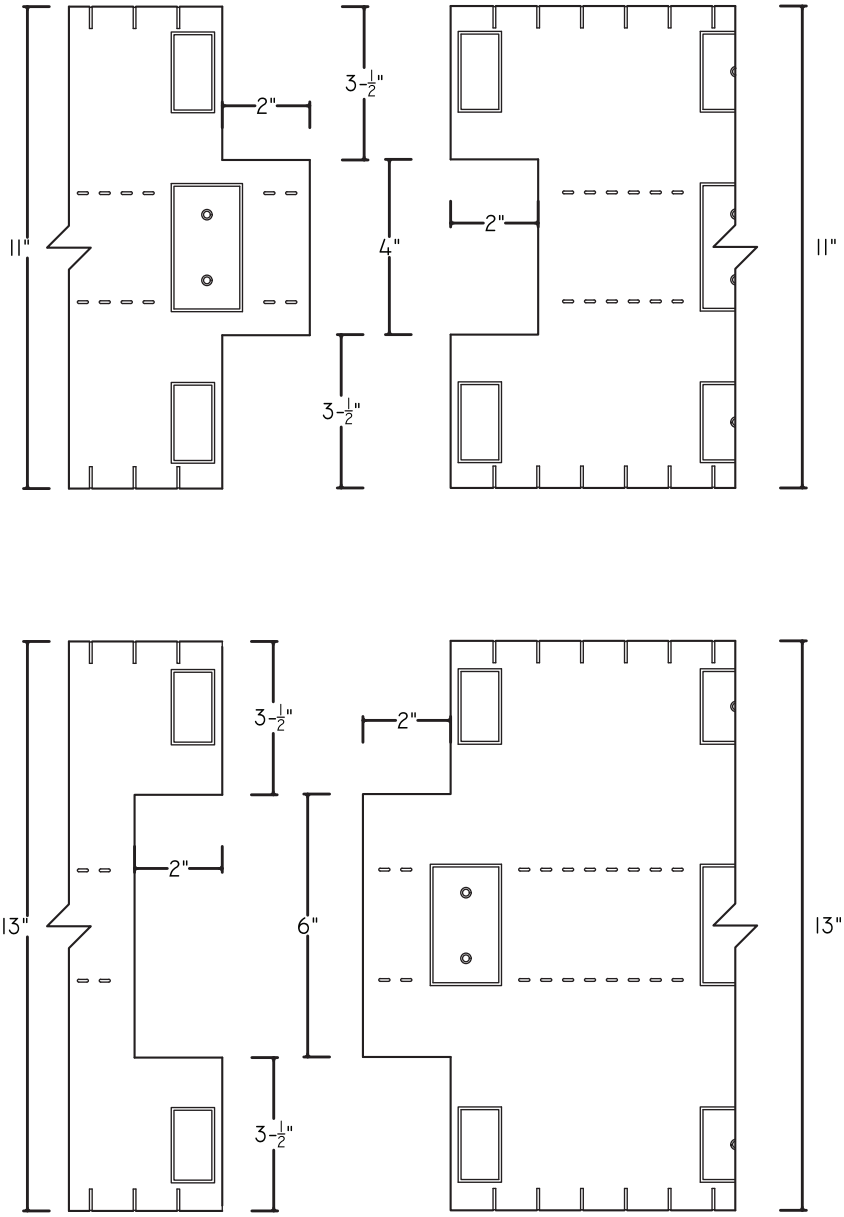

BuildBlock® BUILDING SYSTEMS

9705 N. BROADWAY EXTENSION, SUITE 200, OKLAHOMA CITY, OK 73114
OFFICE: 405-840-3386 | TOLL FREE: 866-222-2575 | FAX: 831-597-0792
BUILDBLOCK.COM

BUILDBUCK CONNECTION DETAIL

DATE/REV	12/2015	SCALE	NTS	DETAIL SHEET
NOTES				62E

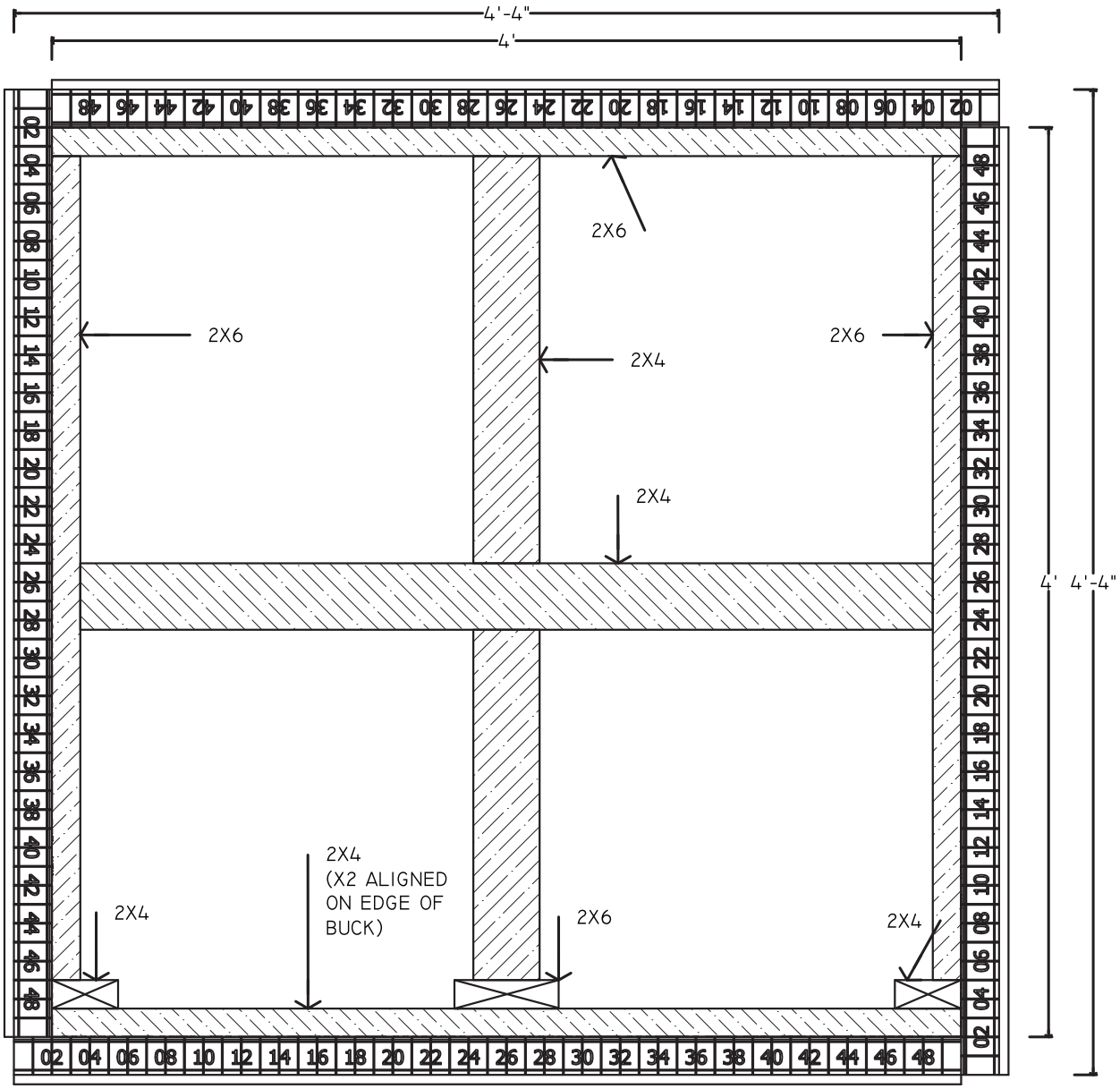

- MAX OPENING WITH NO SPLICES 48 INCH BY 48 INCH.
- BUCK OPENING SHOULD BE WINDOW OR DOOR ROUGH OPENING PLUS 4 INCHES OUTSIDE TO OUTSIDE.
- BUILDBLOCK RECOMMENDS INSTALLING AN INNER FRAME WITH CROSS-BRACES FOR SHORING DURING CONCRETE POUR. VERTICAL BRACING SHOULD REMAIN IN PLACE 7-14 DAYS. IF LOADING LINTELS DURING FRAMING IT IS RECOMMENDED TO LEAVE VERTICAL BRACING IN PLACE AS LONG AS POSSIBLE.
- OPENINGS WIDER OR TALLER THAN 4FT ARE BUCKED BY JOINING THE BUCK MALE END TO FEMALE END USING THE FACTORY EDGES.
- CUT BUCKS SHOULD BE TRIMMED TO MAKE A NEW FACTORY EDGE.
- CORNERS MAY BE JOINED WITH A SIMPLE BUTT JOINT, A FACTORY JOINT OR CUT TO MAKE A FACTORY JOINT.
- BUCK JOINTS MAY BE BONDED WITH SPRAY FOAM ADHESIVE ON THE JOINING FACES ONLY. USE A MINIMAL AMOUNT. THIS WILL SEAL AGAINST WATER AND AIR INFILTRATION.
- CORNERS AND OUTER EDGES SHOULD BE FLASHED WITH AN ICF COMPATIBLE FLASHING. TAMKO TW FLASH-N-WRAP OR SIMILAR FLASHING MATERIAL ARE RECOMMENDED. ALTERNATIVELY ALUMINUM HVAC TAPE BONDS TIGHTLY, SEALING ALL JOINTS, AND MAY ALSO BE USED WITH BUILDBUCK.
- DO NOT USE PETROLEUM BASED CAULKING, SEALANT, OR ADHESIVE.

BuildBlock® BUILDING SYSTEMS

9705 N. BROADWAY EXTENSION, SUITE 200, OKLAHOMA CITY, OK 73114
OFFICE: 405-840-3386 | TOLL FREE: 866-222-2575 | FAX: 831-597-0792
BUILDBLOCK.COM

BUILDBUCK ASSEMBLY AND BRACING

DATE/REV	12/2015	SCALE	NTS	DETAIL SHEET
NOTES				62F

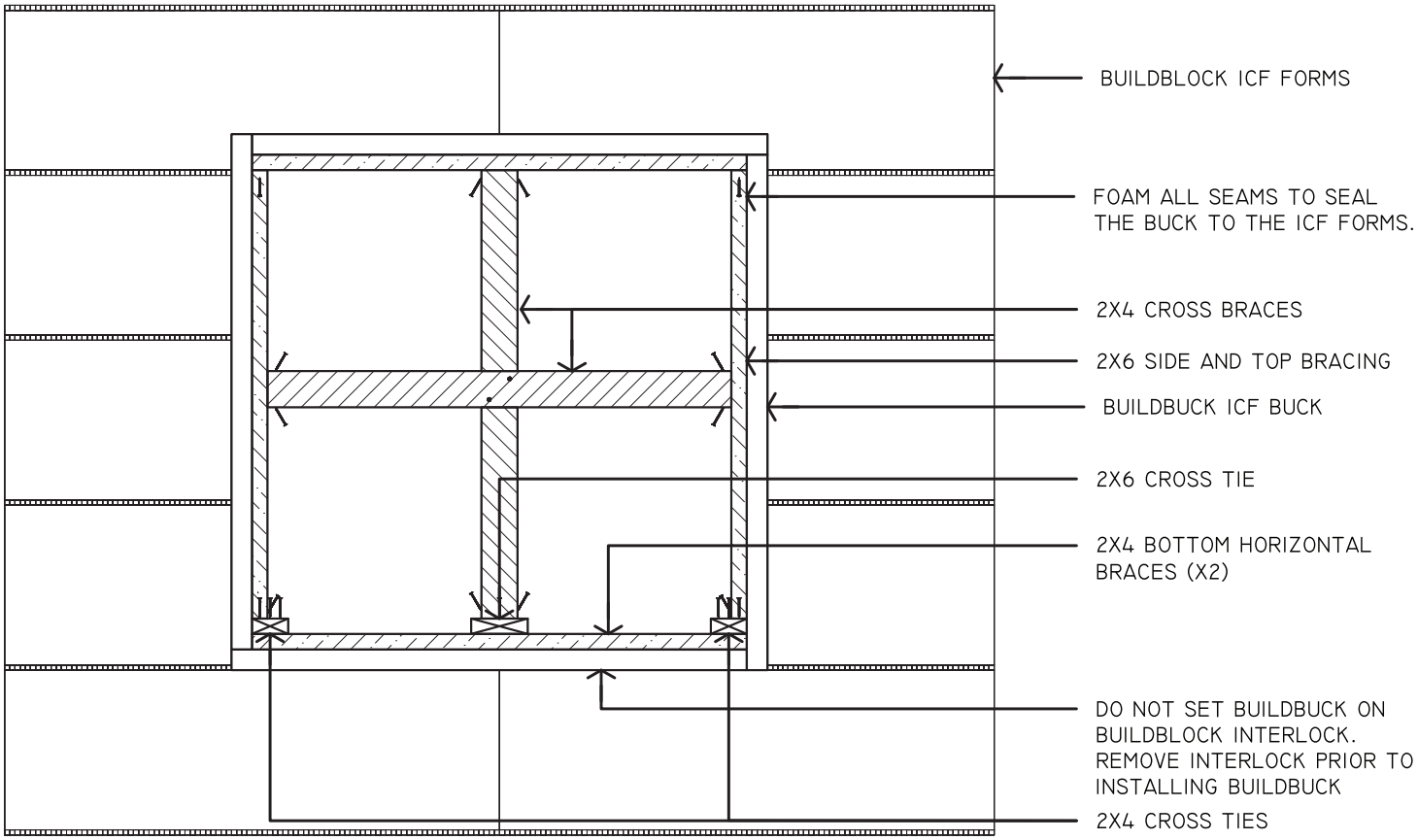

BRACING FOR BUILDBUCK.

1. TOP AND SIDE RAILS - 2X6 LUMBER.
2. BOTTOM RAILS AND CROSS BRACES - 2X4 OR 2X6 LUMBER.
3. BOTTOM CROSS TIES SHOULD BE 2X4 LUMBER ON SIDES AND 2X6 LUMBER IN CENTER.
4. TOP RAIL SHOULD BE CUT FULL ROUGH OPENING WIDTH.
5. BOTTOM RAILS SHOULD BE CUT FULL R/O WIDTH.
6. BOTTOM CROSS TIES SHOULD BE CUT FULL BUCK DEPTH.
7. SIDE RAILS SHOULD BE CUT TO ROUGH OPENING LESS TOP, BOTTOM AND BOTTOM CROSS TIE DIMENSION.
8. ALL RAILS AND CROSS TIES SHOULD BE SCREWED IN THE PATTERN SHOWN. IT IS IMPORTANT TO SCREW THE BOTTOM CROSS TIES AND THE SIDE RAILS TO THE BOTTOM RAILS TO PREVENT THE BUCK FROM SHIFTING DURING THE POUR.
9. CROSS BRACES SHOULD BE 2X4 OR LARGER, AND MAY BE TURNED SO THAT THEY BYPASS AT THE CENTER. THEY SHOULD BE SCREWED TOGETHER AT THE CENTER AND TOENAILED ON EACH END.
10. FOLLOW STANDARD PRACTICES FOR REMOVAL OF BRACING BASED ON LOADS APPLIED AND DESIGN STRENGTH OF CONCRETE.

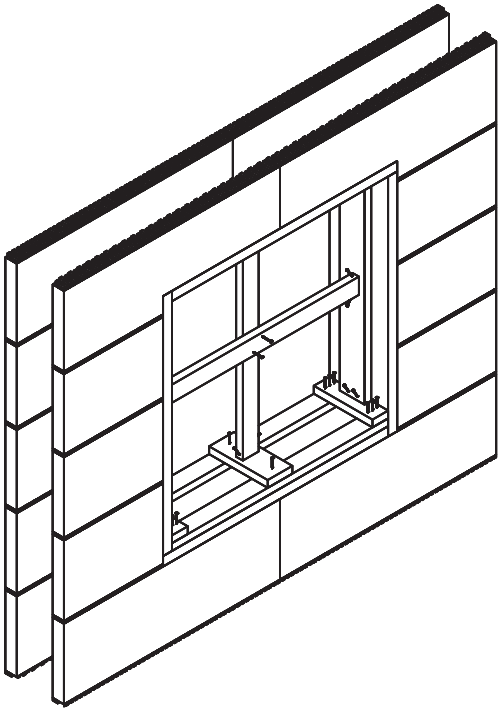

BuildBlock® BUILDING SYSTEMS

9705 N. BROADWAY EXTENSION, SUITE 200, OKLAHOMA CITY, OK 73114
OFFICE: 405-840-3386 | TOLL FREE: 866-222-2575 | FAX: 831-597-0792
BUILDBLOCK.COM

BUILDBUCK BRACING RECOMMENDATIONS

DATE/REV	12/2015	SCALE	NTS	DETAIL SHEET
NOTES				62G

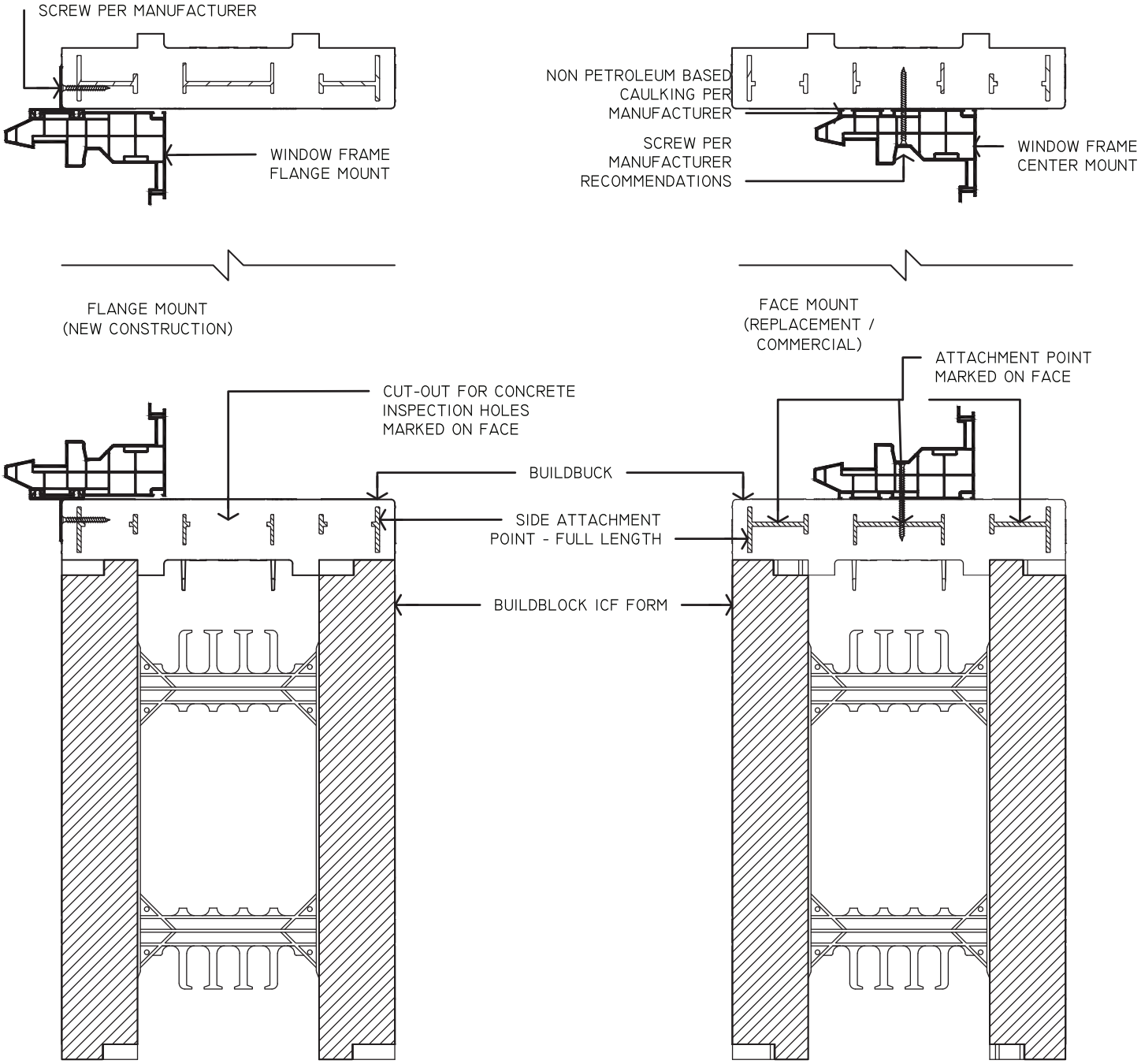

WINDOWS MAY BE INSTALLED EITHER AS A NEW CONSTRUCTION (FLANGED) WINDOW, OR A COMMERCIAL / REPLACEMENT (NON-FLANGED) WINDOW. FLANGED WINDOWS SHOULD BE INSTALLED TO THE OUTSIDE OF THE BUCK, USING THE SIDE ATTACHMENT POINT AS THE NAILER. WINDOWS WITHOUT A FLANGE SHOULD USE THE FACE ATTACHMENT POINTS, WHICH ARE MARKED BY BOUNDING BOXES ON THE FACE OF THE BUCK. USE SCREWS RECOMMENDED BY THE WINDOW MANUFACTURER, AND LONG ENOUGH TO EXTEND 1/2" INTO THE ATTACHMENT POINTS

BuildBlock® BUILDING SYSTEMS

9705 N. BROADWAY EXTENSION, SUITE 200, OKLAHOMA CITY, OK 73114
OFFICE: 405-840-3386 | TOLL FREE: 866-222-2575 | FAX: 831-597-0792
BUILDBLOCK.COM

BUILDBUCK WINDOW MOUNTING RECOMMENDATIONS

DATE/REV	12/2015	SCALE	NTS	DETAIL SHEET
NOTES				62H

SECTION: AA DOOR LINTEL

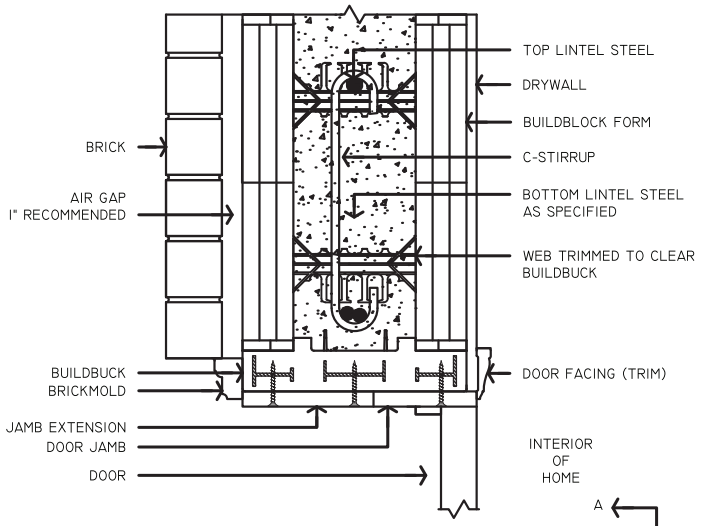

LINTELS (HEADERS ABOVE DOORS AND WINDOWS) SHOULD BE DESIGNED IN ACCORDANCE WITH SITE SPECIFIC ENGINEERING, BUILDBLOCK ENGINEERING MANUAL, PCA-100, THE PRESCRIPTIVE METHOD, OR OTHER APPLICABLE CODES OR ENGINEERING.
HORIZONTAL LINTEL STEEL SHOULD EXTEND 2FT PAST EACH SIDE OF AN OPENING FOR BOTH TOP AND BOTTOM BARS. TOP LINTEL BAR IS TYPICALLY THE TOP HORIZONTAL BAR IN THE WALL, AND RUNS FULL LENGTH OF THE WALL IN THE TOP COURSE.
"C" OR "S" STIRRUPS ARE USED TO SUPPORT BOTTOM BARS, AND SHOULD EXTEND FROM TOP REBAR TO WITHIN 1" TO 2" OF THE BOTTOM OF THE LINTEL. CENTER DISTANCE OF STIRRUPS IS SPECIFIED IN THE LINTEL TABLES IN THE ENGINEERING SOURCE. MAINTAIN CONCRETE COVERAGE OVER STIRRUPS, MINIMUM 3/4" FROM BACK OF BUCK TO STIRRUP. 1" IS RECOMMENDED.

DOOR INSTALLATION WITH BUILDBUCK:
DUE TO THE THICKNESS OF ICF WALL SYSTEMS, A JAMB EXTENDER OR ADDITIONAL TRIM WILL BE REQUIRED TO FULLY TRIM THE DOOR JAMBS. THESE MAY BE AVAILABLE FROM THE MANUFACTURER, OR BUILT ONSITE BY CONTRACTOR. DOOR MANUFACTURERS MAY HAVE OPTIONS FOR WIDER JAMBS WHEN ORDERING DOORS.

ALL HARDWARE SCREWS MUST BE SIZED TO EXTEND THROUGH THE MOLDED ATTACHMENT POINTS BY 1/2". THESE ARE LOCATED 3/4" BELOW THE FACE OF THE FOAM. ADD 1-1/4" TO THE THICKNESS OF JAMB MATERIAL FOR PROPER SCREW SIZING.

TAPCON OR RED-HEAD FASTENERS MAY BE USED TO FURTHER REINFORCE THE JAMBS, BY EMBEDDING INTO THE CONCRETE CORE OF THE WALL. FOR COMMERCIAL APPLICATIONS, OR HEAVY DUTY INSTALLATIONS, THE CONCRETE INSPECTION WINDOWS ON THE BUCK MAY BE REMOVED PRIOR TO POURING, ALLOWING THE CONCRETE TO FULLY FILL TO THE FACE OF THE BUCK. THIS PROVIDES A MORE DIRECT CONNECTION TO THE CONCRETE CORE, AND ADDITIONAL SUPPORT FOR JAMB MATERIAL. BRACING FOR OPENING SHOULD COVER THESE HOLES, ALLEVIATING THE NEED FOR ADDITIONAL FORMING MATERIAL.

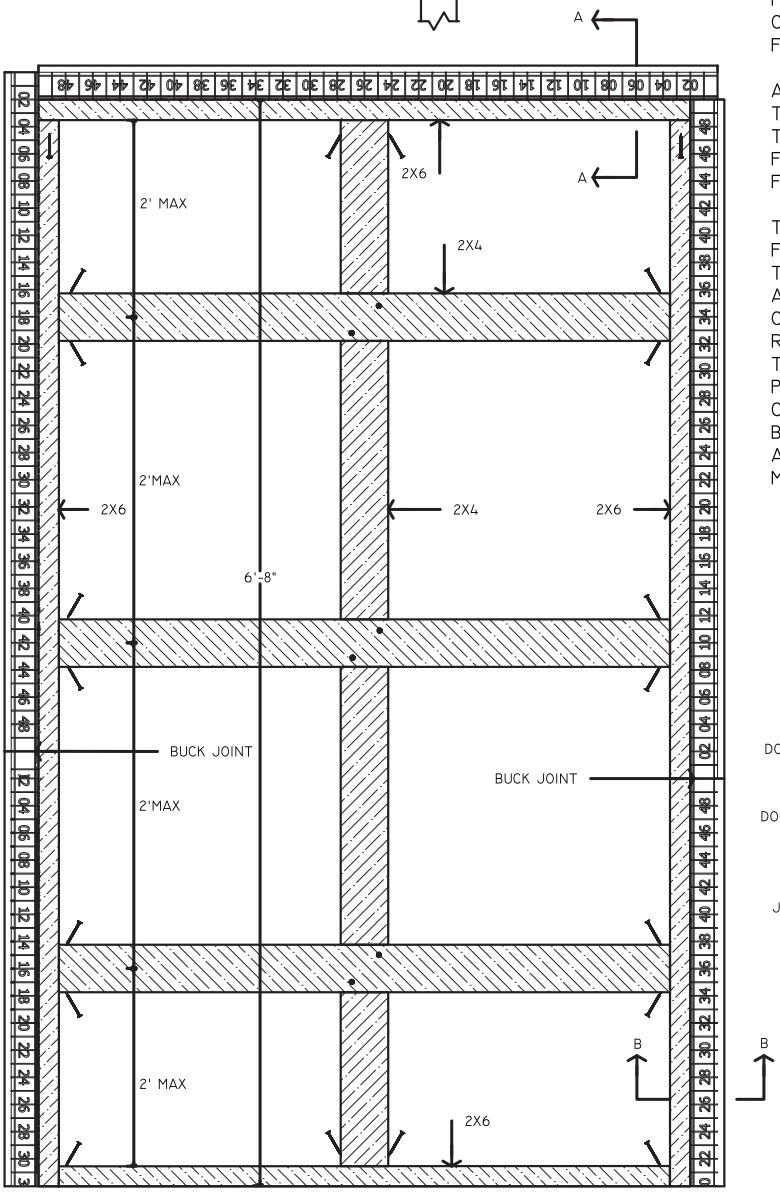

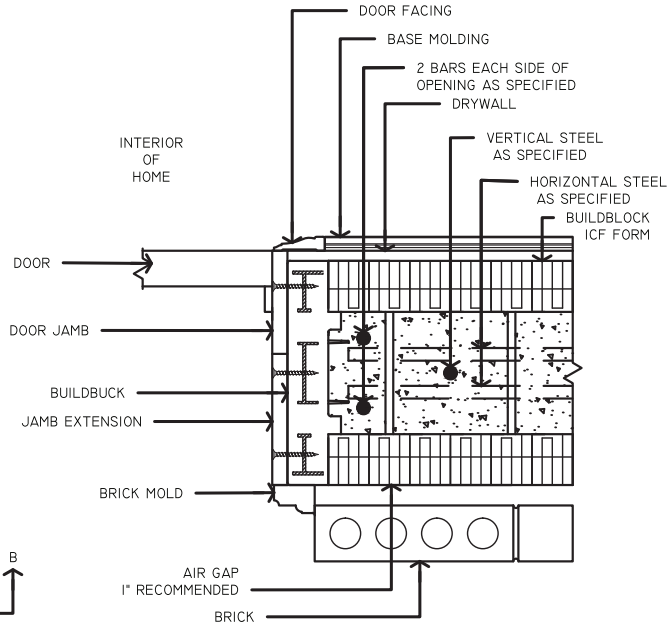

SECTION: BB TOP DOWN VIEW

BuildBlock® BUILDING SYSTEMS

9705 N. BROADWAY EXTENSION, SUITE 200, OKLAHOMA CITY, OK 73114
OFFICE: 405-840-3386 | TOLL FREE: 866-222-2575 | FAX: 831-597-0792
BUILDBLOCK.COM

BUILDBUCK DOOR INSTALLATION DETAIL

DATE/REV	12/2015	SCALE	NTS	DETAIL SHEET
NOTES				621

BUILDSHIELD TERMITE AND BUILDSHIELD FIRESTOP PROTECTION ARE A 2 PART SYSTEM CONSISTING OF A PVC EXTRUSION AND AN ADHESIVE STAINLESS STEEL BARRIER. THE COMBINATION OF INEDIBLE PLASTIC AND HIGH STRENGTH PUNCTURE RESISTANT STAINLESS STEEL CREATES AN IMPENETRABLE BARRIER TO TERMITE INTRUSION INTO YOUR HOME OR STRUCTURE.

BUILDSHIELD FIRESTOP PROTECTION CREATES A BARRIER BRIDGING THE EPS FOAM AT THE TOP OF A WALL AND BETWEEN FLOORS IN ICF STRUCTURES, ENSURING THAT HOT GASES FROM A FIRE DO NOT TRAVEL UP THE WALL, PREVENTING FASTER SPREAD OF THE FLAMES THROUGH THE STRUCTURE.

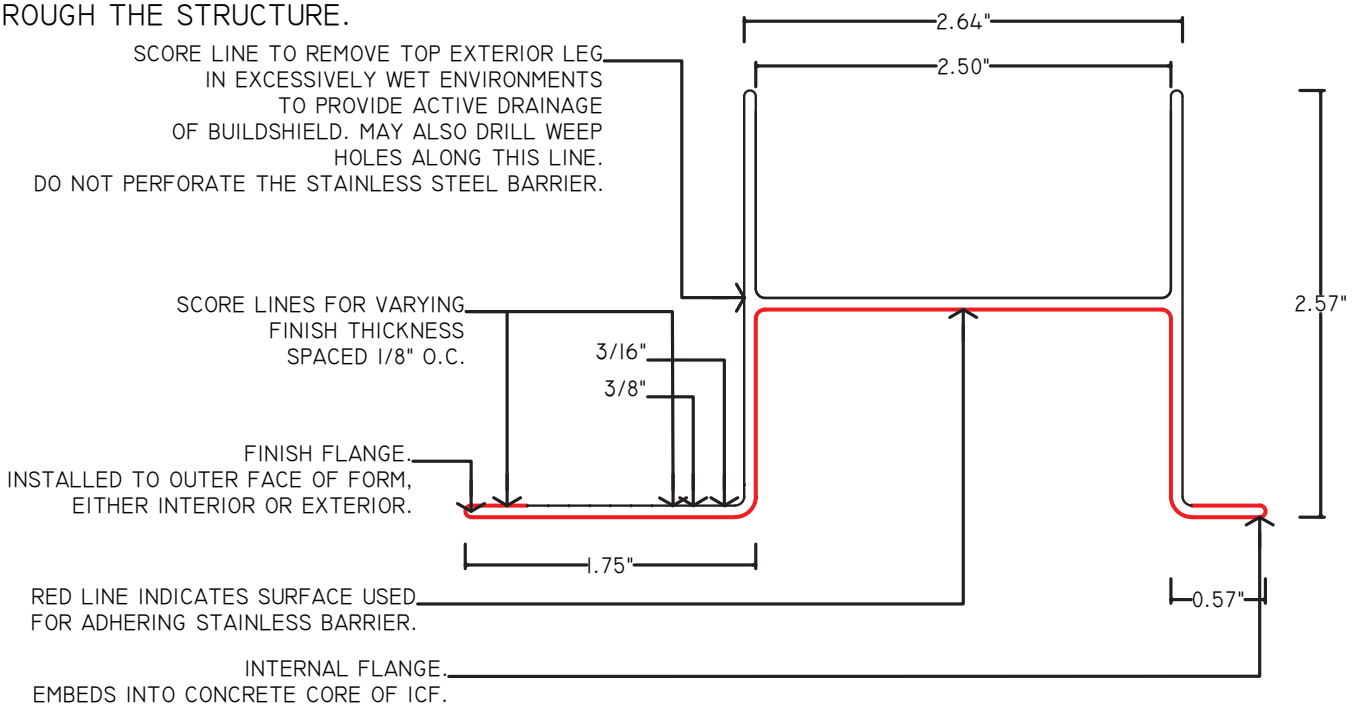

THE STAINLESS STEEL BARRIER PROVIDES A GAPLESS SEAL ALONG THE LENGTH OF THE EXTRUSION. SEAMS IN THE STAINLESS STEEL BARRIER SHOULD BE OVERLAPPED 2 INCHES. THE EXTRUSION SHAPES THE STAINLESS STEEL BARRIER EMBEDDING THE WRAPPED FLANGES INTO THE CONCRETE CORE, EXTERIOR WALL FINISHES, OR INTERIOR FLOOR SLAB. THE EXTRUSION ENSURES THAT THE BARRIER IS PROPERLY POSITIONED THROUGHOUT THE ENTIRE CONSTRUCTION PROCESS.

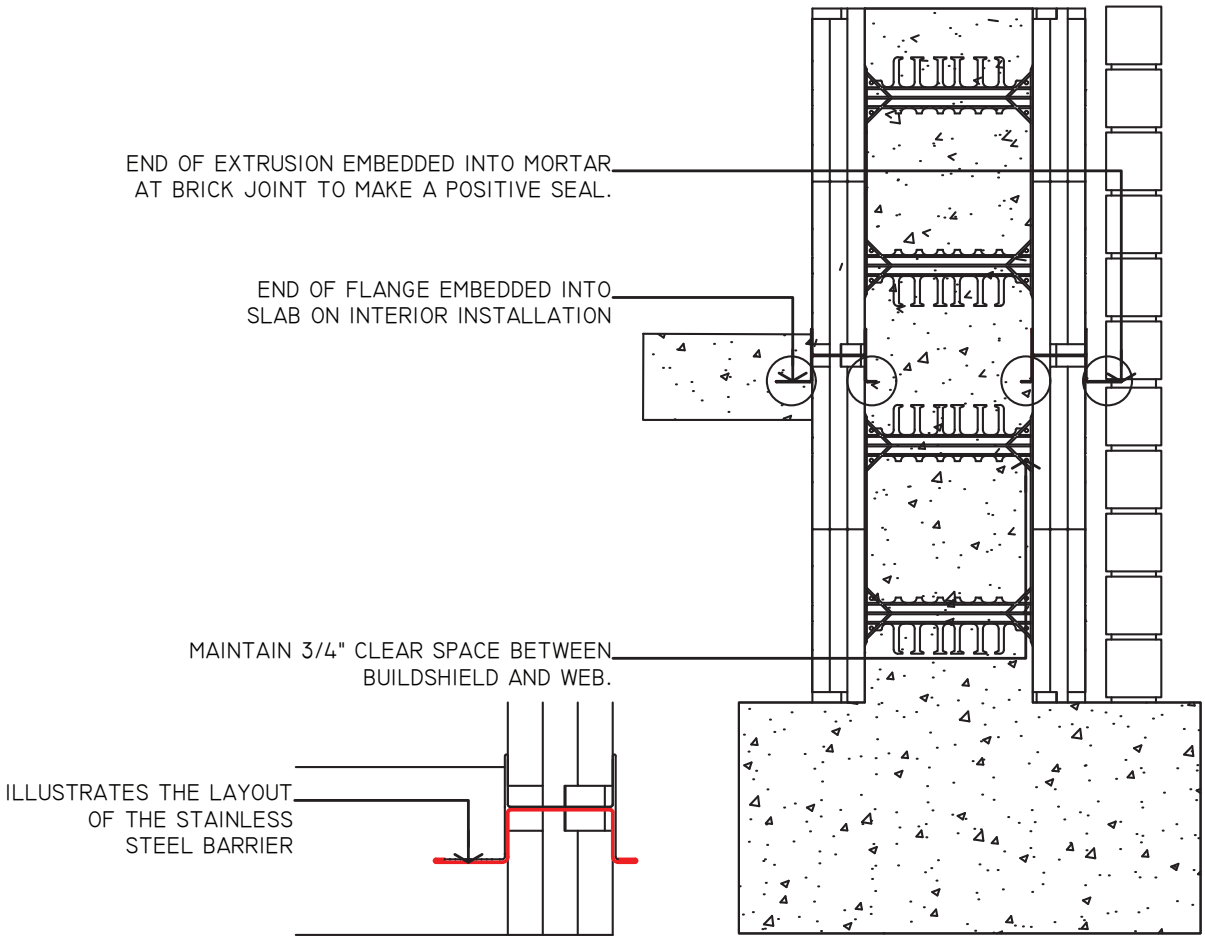

BUILDSHIELD TERMITE INSTALLATION

1. STACK ICF FORMS TO THE HEIGHT REQUIRED FOR PLACEMENT OF THE BUILDSHIELD TERMITE PROTECTION.
2. PRE-CUT ICF CORNER FORMS AS SHOWN IN DETAIL 63C FOR USE WITH BUILDSHIELD, TO ENSURE THE EXTRUSION WILL FIT COMPLETELY INTO THE CORNER OF THE FORM.
3. MITER CUT 2 EXTRUSIONS INTO THE CORNER BLOCK USING A MITER SAW, OR MITER TABLE. ENSURE THAT THE WIDE FLANGE IS TO THE OUTSIDE FACE OF THE BLOCK AWAY FROM THE CONCRETE CORE.
4. ROLL OUT THE ADHESIVE STAINLESS STEEL BARRIER ONTO THE TOP OF THE FORMS. LEAVE 2-1/2" OF TAPE EXTENDING OUT FROM THE EDGES OF THE CORNER BLOCK. ROLL OUT PLENTY OF STAINLESS BARRIER TO WORK WITH.
5. ALIGN THE CREASED EDGE LINES IN THE STAINLESS STEEL BARRIER WITH THE EDGES OF THE ICF FORM PANEL. NOTE: LEAVE THE WIDER PORTION OF THE BARRIER FROM THE SCORE LINES TO THE OUTSIDE FACE OF BLOCK. THE THINNER PORTION OF THE BARRIER FROM THE SCORE LINES TO THE INSIDE CORE OF THE BLOCK.
6. STARTING AT A CORNER, PLACE THE MITERED EXTRUSIONS DOWN OVER THE ADHESIVE STAINLESS STEEL BARRIER, WORKING DOWN THE WALL.
7. PLACE ALL EXTRUSIONS PRIOR TO WRAPPING THE ADHESIVE STAINLESS STEEL BARRIER AROUND THE EXTRUSION FLANGES.
8. WIPE THE EXTRUSION FLANGES CLEAN TO PREPARE FOR ADHESIVE BEFORE PROCEEDING TO THE NEXT STEP .
9. USING A SHARP RAZOR KNIFE, LIGHTLY SCORE THE PAPER AT THE BOTTOM OF THE EXTRUSION, AND PEEL IT BACK FROM THE STAINLESS STEEL, EXPOSING THE ADHESIVE. DO NOT PUNCTURE OR CUT STAINLESS STEEL. IF IT IS CUT, PLACE A PATCH OVER THE CUT, EXTENDING 2" EITHER SIDE OF CUT, AND BOND FULLY TO THE STAINLESS STEEL.
10. CAUTION: WEARING PROTECTIVE GLOVES IS A NECESSITY FOR THE NEXT STEP. SERIOUS INJURY WILL RESULT. THE STAINLESS STEEL EDGES ARE VERY SHARP AND WILL EASILY CUT THROUGH YOUR HANDS.
11. BEGIN WORKING THE ADHESIVE AGAINST THE EXTRUSION TAKING SPECIAL CARE TO REMOVE ANY GAPS OR BUBBLES. IT HELPS TO SLIDE ONE'S HANDS AGAINST THE STEEL TO BOND THE ADHESIVE AND TO HELP BEND THE STAINLESS STEEL BARRIER. HOLD THE EXTRUSION DOWN AS THE STAINLESS STEEL IS BEING FOLDED UNDER AND AROUND THE FLANGE. THIS IS ESPECIALLY CRITICAL AT THE EDGES OF THE FLANGES, AS THE STAINLESS STEEL MUST BE FORMED TIGHTLY AROUND THE SMALL RADIUS.
12. CONTINUE TO WORK THE STAINLESS STEEL BARRIER ONTO THE TOP OF THE FLANGES, SEALING IT FULLY IN PLACE.
13. WHEN LAPPING STAINLESS STEEL AT CORNERS, REMOVE THE PAPER BACKING FROM THE STAINLESS STEEL BARRIER ON BOTTOM TO FULLY ADHERE IT TO THE STAINLESS STEEL ABOVE WHERE THE BARRIERS OVERLAP. TAKE CARE TO ENSURE THAT ALL STAINLESS STEEL IS LAPPED AND BONDED AT THE CORNER TO ELIMINATE ANY GAPS. SMALL PIECES OF BARRIER MAY BE CUT TO COVER ANY REMAINING GAPS. COMPLETE COVERAGE OF THE BARRIER IS ESSENTIAL AT THE CORNERS.
14. IF BUILDSHIELD IS BEING INSTALLED WITH THE STAINLESS ABOVE THE EXTRUSION, ENSURE PROPER ORIENTATION OF THE EXTRUSION, AND PLACE IT ON TOP OF THE COURSE. FOLD THE STAINLESS STEEL BARRIER AT THE CREASES TO EASE PLACEMENT OF THE ICF FORMS, AND INSERT INTO THE EXTRUSION. PLACE THE TOP ICF FORM INTO THE EXTRUSION, INSIDE THE STAINLESS STEEL BARRIER, AND FOLLOW STEPS ABOVE FOR SCORING THE PAPER AND ADHERING THE STAINLESS TO THE EXTRUSION, WORKING FROM THE ICF TO THE BOTTOM SIDE OF THE FLANGES.
15. IF BUILDSHIELD IS USED FOR A CONCRETE FLOOR SYSTEM, ENSURE THAT THE STAINLESS STEEL IS SET SO THAT IT IS FULLY EMBEDDED INTO THE CONCRETE SLAB. LEAVE AT LEAST 3/4" COVERAGE OF CONCRETE MINIMUM OVER AND UNDER THE FLANGES.
16. ENSURE THAT BUILDSHIELD EXTENDS TO OR PAST THE EXTERIOR FINISH OF THE WALL. FOR BRICK BUILDSHIELD SHOULD EXTEND INTO THE MORTAR JOINT BETWEEN 2 COURSES. THE HOLES MUST BE GROUTED FULL ON THE COURSE ABOVE AND BELOW THE BUILDSHIELD INSTALLATION. FOR STUCCO OR EIFS, THE EXTERIOR FLANGE SHOULD BE SHORTENED TO EXTEND FLUSH OR SLIGHTLY BEYOND THE FINISH THICKNESS OF THE FINISH. SIDING AND OTHER FINISHES MAY BENEFIT FROM THE FULL LENGTH OF THE FLANGE TO ENSURE EASY INSPECTIONS FOR TERMITE MUD TUBES.
17. NOTE: ICF BLOCKS MAY NEED TO BE CUT TO A PARTICULAR WALL HEIGHT TO ALLOW FOR PROPER PLACEMENT OF THE BUILDSHIELD FLANGE WITHIN THE WALL SYSTEM.
18. REMOVE INTERLOCK FINGERS ON THE ICF FORM IN THE COURSE ABOVE BUILDSHIELD THAT FITS INTO THE EXTRUSION. IF EXTRUSIONS ARE USED ON BOTH SIDES, YOU DO NOT HAVE TO REMOVE THE FINGERS, BUT THIS WILL AFFECT COURSING HEIGHT. IN ORDER TO MAINTAIN COURSING HEIGHT, REMOVAL OF THE FINGERS IS REQUIRED. IF BUILDSHIELD IS PLACED ONLY ON ONE SIDE OF THE FORM, RASP THE THICKNESS OF THE BUILDSHIELD EXTRUSION FROM THE COURSE WITH THE INTERLOCKS REMOVED TO KEEP THE WALL PLUMB.
19. NOTE: BUILDSHIELD MAY ALSO BE USED UNDER A CRAWLSPACE IN ORDER TO ALLOW INSPECTION FOR MUD TUBES AND OTHER SIGNS OF TERMITE ACTIVITY. ENSURE AT LEAST 4" CLEAR SPACE BETWEEN BUILDSHIELD AND FLOOR SYSTEM FOR VISUAL INSPECTION. BUILDBLOCK RECOMMENDS INSPECTING AT LEAST TWICE PER YEAR FOR CRAWLSPACE INSTALLATIONS, SPRING AND FALL.

BuildBlock® BUILDING SYSTEMS

9705 N. BROADWAY EXTENSION, SUITE 200, OKLAHOMA CITY, OK 73114
OFFICE: 405-840-3386 | TOLL FREE: 866-222-2575 | FAX: 831-597-0792
BUILDBLOCK.COM

BUILDSHIELD TERMITE INSTALLATION

DATE/REV	12/2015	SCALE	NTS	DETAIL SHEET
NOTES				63B

1. BEGIN ALL BUILDSHIELD INSTALLATIONS AT THE CORNERS.
2. THE CORNER FORMS IMMEDIATELY ABOVE AND BELOW THE BUILDSHIELD INSTALLATION MUST BE PREPARED PRIOR TO INSTALLING BUILDSHIELD.
3. THE INTERNAL FOAM RADIUS IN THE CORNER FORMS SHOULD BE CUT OUT TO PROVIDE ADEQUATE CLEARANCE FOR BUILDSHIELD EXTRUSIONS. THE CUTS SHOULD BE MADE 3" DEEP, AND SHOULD MAINTAIN THE PANEL THICKNESS AT 2-1/2" INTO THE CORNER.
4. MAKE ALL CUTS AWAY FROM THE STACKED FORMS, TO AVOID FILLING THE CORES WITH FOAM PIECES OR BEADS.
5. BUILDSHIELD EXTRUSIONS SHOULD HAVE A MITER CUT, MADE ON A MITER SAW OR IN A MITER BOX.
6. MITER JOINTS SHOULD HAVE STAINLESS STEEL BARRIERS OVERLAP FROM EACH DIRECTION, AND BARRIERS SHOULD BE FULLY BONDED TOGETHER, BY REMOVING THE ADHESIVE PAPER FROM THE BOTTOM BARRIER. TAKE CARE TO AVOID ANY BUBBLES OR WRINKLES. READ FULL INSTALLATION INSTRUCTIONS BEFORE BEGINNING.
7. WHEN POURING WALLS, IT IS NECESSARY TO FULLY VIBRATE THIS AREA, TO ENSURE THAT CONCRETE IS PROPERLY CONSOLIDATED AROUND THE FLANGE. ADDITIONALLY, SLIGHTLY HIGHER SLUMP CONCRETE (THINNER) MAY BE USED TO HELP ASSURE COMPLETE CONSOLIDATION AROUND THE FLANGES. DO NOT EXCEED A 6" TO 7" SLUMP.

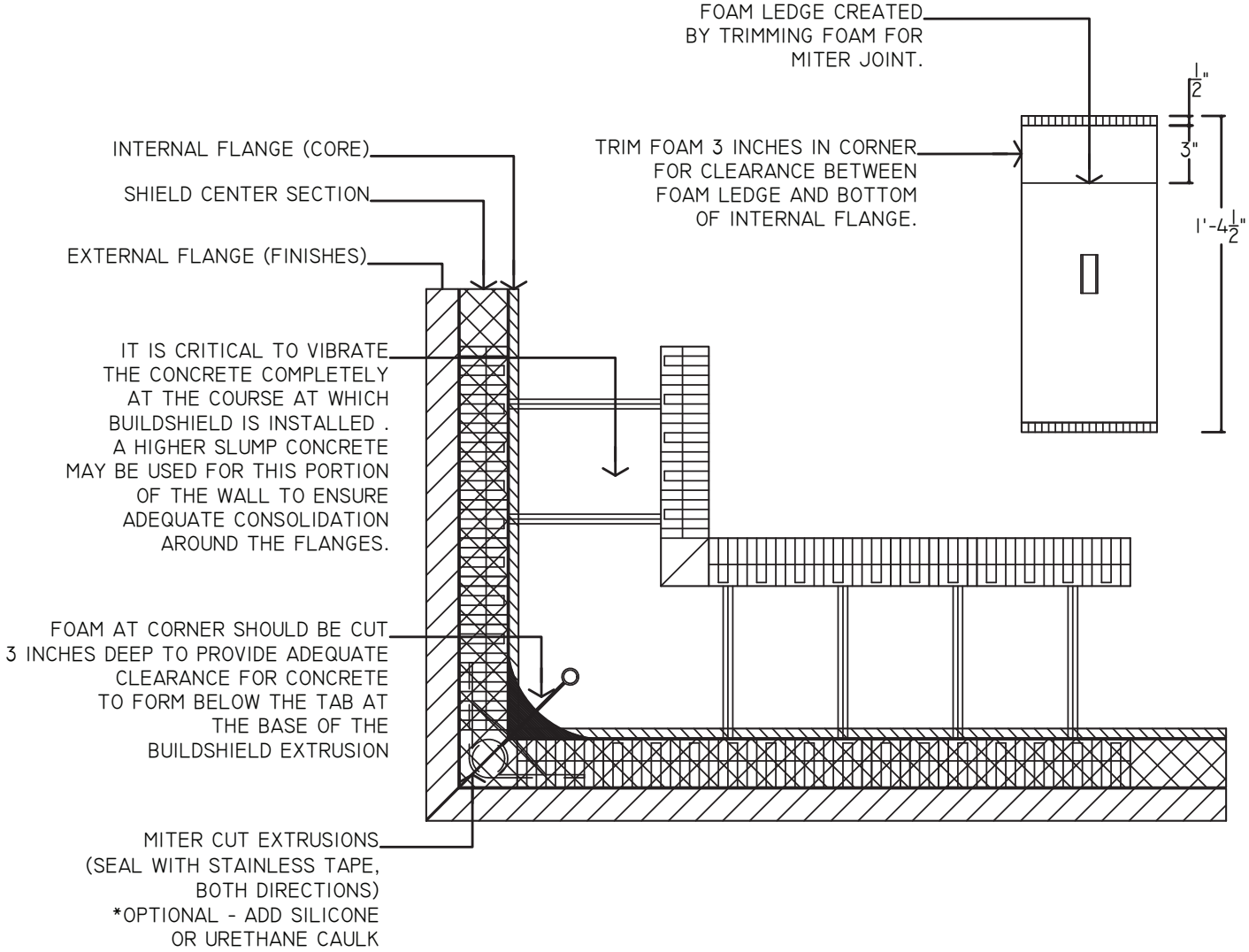

BuildBlock® BUILDING SYSTEMS

9705 N. BROADWAY EXTENSION, SUITE 200, OKLAHOMA CITY, OK 73114
OFFICE: 405-840-3386 | TOLL FREE: 866-222-2575 | FAX: 831-597-0792
BUILDBLOCK.COM

BUILDSHIELD CORNER FORM MODIFICATION

DATE/REV	12/2015	SCALE	NTS	DETAIL SHEET
NOTES				63C

BUILDSHIELD INSTALLATION CONCRETE FLOOR SYSTEM

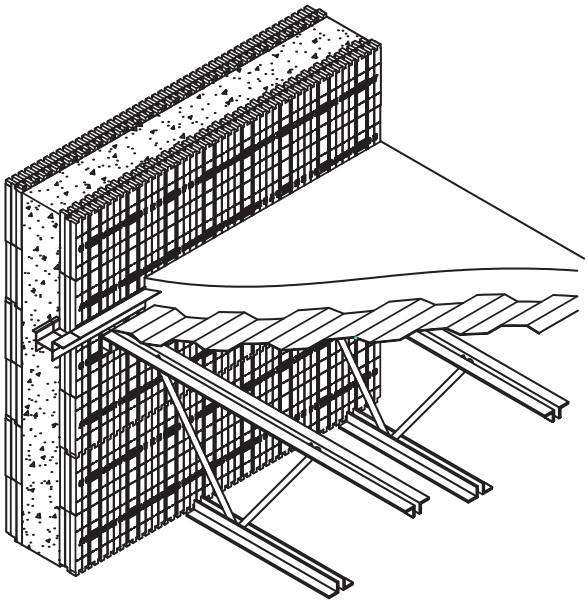

BUILDSHIELD INSTALLATION JOIST TYPE FLOOR SYSTEM

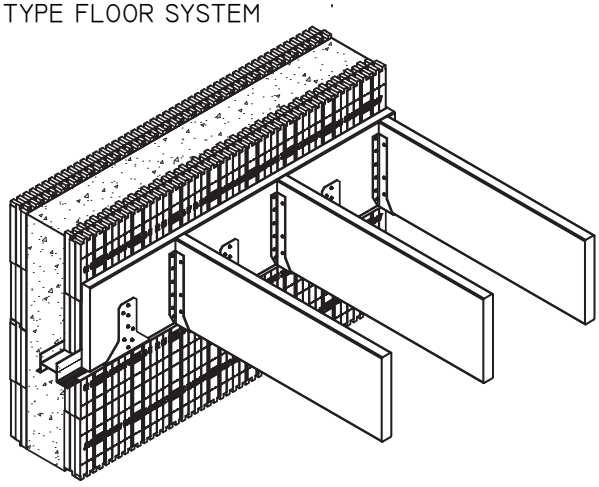

BUILDSHIELD FIRESTOP INSTALLATION

1. STACK ICF FORMS TO THE HEIGHT REQUIRED FOR PLACEMENT OF THE BUILDSHIELD FIIRESTOP.
2. PRE-CUT ICF CORNER FORMS AS SHOWN IN DETAIL 63C FOR USE WITH BUILDSHIELD, TO ENSURE THE EXTRUSION WILL FIT COMPLETELY INTO THE CORNER OF THE FORM.
3. MITER CUT 2 EXTRUSIONS INTO THE CORNER BLOCK USING A MITER SAW, OR MITER TABLE. ENSURE THAT THE WIDE FLANGE IS TO THE OUTSIDE FACE OF THE BLOCK AWAY FROM THE CONCRETE CORE.
4. ROLL OUT THE ADHESIVE STAINLESS STEEL BARRIER ONTO THE TOP OF THE FORMS. LEAVE 2" OF TAPE EXTENDING OUT FROM THE EDGES OF THE CORNER BLOCK. ROLL OUT PLENTY OF STAINLESS BARRIER TO WORK WITH.
5. ALIGN THE CREASED EDGE LINES IN THE STEEL WITH THE EDGES OF THE ICF FORM PANEL. NOTE: LEAVE THE WIDER PORTION OF THE BARRIER FROM THE SCORE LINES TO THE OUTSIDE FACE OF BLOCK. THE THINNER PORTION OF THE BARRIER FROM THE SCORE LINES TO THE INSIDE CORE OF THE BLOCK.
6. STARTING AT A CORNER, PLACE THE MITERED EXTRUSION DOWN OVER THE ADHESIVE STAINLESS STEEL BARRIER, WORKING DOWN THE WALL.
7. PLACE ALL EXTRUSIONS PRIOR TO WRAPPING THE ADHESIVE STAINLESS STEEL BARRIER AROUND THE EXTRUSION FLANGES.
8. WIPE THE EXTRUSION FLANGES CLEAN TO PREPARE FOR ADHESIVE BEFORE PROCEEDING TO THE NEXT STEP .
9. USING A SHARP RAZOR KNIFE, LIGHTLY SCORE THE PAPER AT THE BOTTOM OF THE EXTRUSION, AND PEEL IT BACK FROM THE STAINLESS STEEL, EXPOSING THE ADHESIVE. DO NOT PUNCTURE OR CUT STAINLESS STEEL. IF IT IS CUT, PLACE A PATCH OVER THE CUT, EXTENDING 2" EITHER SIDE OF CUT, AND BOND FULLY TO THE STAINLESS STEEL.
10. CAUTION: WEARING PROTECTIVE GLOVES IS A NECESSITY FOR THE NEXT STEP. SERIOUS INJURY WILL RESULT. THE STAINLESS STEEL EDGES ARE VERY SHARP AND WILL EASILY CUT THROUGH YOUR HANDS.
11. BEGIN WORKING THE ADHESIVE AGAINST THE EXTRUSION TAKING SPECIAL CARE TO REMOVE ANY GAPS OR BUBBLES. IT HELPS TO SLIDE ONE'S HANDS AGAINST THE STEEL TO BOND THE ADHESIVE AND TO HELP BEND THE STAINLESS STEEL BARRIER. HOLD THE EXTRUSION DOWN AS THE STAINLESS STEEL IS BEING FOLDED UNDER AND AROUND THE FLANGE. THIS IS ESPECIALLY CRITICAL AT THE EDGES OF THE FLANGES, AS THE STAINLESS STEEL MUST BE FORMED TIGHTLY AROUND THE SMALL RADIUS.
12. CONTINUE TO WORK THE STAINLESS STEEL BARRIER ONTO THE TOP OF THE FLANGES, SEALING IT FULLY IN PLACE.
13. WHEN LAPPING STAINLESS STEEL AT CORNERS, REMOVE THE PAPER BACKING FROM THE STAINLESS STEEL BARRIER ON BOTTOM TO FULLY ADHERE IT TO THE STAINLESS STEEL ABOVE WHERE THE BARRIERS OVERLAP. TAKE CARE TO ENSURE THAT ALL STAINLESS STEEL IS LAPPED AND BONDED AT THE CORNER TO ELIMINATE ANY GAPS. SMALL PIECES OF BARRIER MAY BE CUT TO COVER ANY REMAINING GAPS. COMPLETE COVERAGE OF THE BARRIER IS ESSENTIAL AT THE CORNERS.
14. IF BUILDSHIELD IS BEING INSTALLED WITH THE STAINLESS ABOVE THE EXTRUSION, ENSURE PROPER ORIENTATION OF THE EXTRUSION, AND PLACE IT ON TOP OF THE COURSE. FOLD THE STAINLESS STEEL BARRIER AT THE CREASES TO EASE PLACEMENT OF THE ICF FORMS, AND INSERT INTO THE EXTRUSION. PLACE THE TOP ICF FORM INTO THE EXTRUSION, INSIDE THE STAINLESS STEEL BARRIER, AND FOLLOW STEPS ABOVE FOR SCORING THE PAPER AND ADHERING THE STAINLESS TO THE EXTRUSION, WORKING FROM THE ICF TO THE BOTTOM SIDE OF THE FLANGES.
15. IF BUILDSHIELD IS USED FOR A CONCRETE FLOOR SYSTEM, ENSURE THAT THE STAINLESS STEEL IS SET SO THAT IT IS FULLY EMBEDDED INTO THE CONCRETE SLAB. LEAVE AT LEAST 1/2" COVERAGE OF CONCRETE MINIMUM OVER AND UNDER THE FLANGES.
16. ENSURE THAT BUILDSHIELD EXTENDS TO OR PAST THE EXTERIOR FINISH OF THE WALL. FOR BRICK BUILDSHIELD SHOULD EXTEND INTO THE MORTAR JOINT BETWEEN 2 COURSES. THE HOLES MUST BE GROUTED FULL ON THE COURSE ABOVE AND BELOW THE BUILDSHIELD INSTALLATION. FOR STUCCO OR EIFS, THE EXTERIOR FLANGE SHOULD BE SHORTENED TO EXTEND FLUSH OR SLIGHTLY BEYOND THE FINISH THICKNESS OF THE FINISH. SIDING AND OTHER FINISHES MAY BENEFIT FROM THE FULL LENGTH OF THE FLANGE TO ENSURE EASY INSPECTIONS FOR TERMITE MUD TUBES.
17. NOTE: ICF BLOCKS MAY NEED TO BE CUT TO A PARTICULAR WALL HEIGHT TO ALLOW FOR PROPER PLACEMENT OF THE BUILDSHIELD FLANGE WITHIN THE WALL SYSTEM.
18. REMOVE INTERLOCK FINGERS ON THE ICF FORM IN THE COURSE ABOVE BUILDSHIELD THAT FITS INTO THE EXTRUSION. IF EXTRUSIONS ARE USED ON BOTH SIDES, YOU DO NOT HAVE TO REMOVE THE FINGERS, BUT THIS WILL AFFECT COURSING HEIGHT. IN ORDER TO MAINTAIN COURSING HEIGHT, REMOVAL OF THE FINGERS IS REQUIRED. IF BUILDSHIELD IS PLACED ONLY ON ONE SIDE OF THE FORM, RASP THE THICKNESS OF THE BUILDSHIELD EXTRUSION FROM THE COURSE WITH THE INTERLOCK REMOVED TO KEEP THE WALL PLUMB.
19. MECHANICAL ATTACHMENTS SUCH AS PAN HEAD SCREWS SHOULD BE PLACED THROUGH THE STAINLESS STEEL BARRIER INTO THE WOOD OR STEEL JOISTS AT 12'O.C. THIS WILL PREVENT THE BARRIER FROM SAGGING DURING A FIRE.

BuildBlock® BUILDING SYSTEMS
9705 N. BROADWAY EXTENSION, SUITE 200, OKLAHOMA CITY, OK 73114
OFFICE: 405-840-3386 | TOLL FREE: 866-222-2575 | FAX: 831-597-0792
BUILDBLOCK.COM

BUILDSHIELD FIRESTOP INSTALLATION

DATE/REV	12/2015	SCALE	NTS	DETAIL SHEET
NOTES				63D

1. BUILDSHIELD FIRESTOP SHOULD BE PLACED SO THAT THE FLANGES ALIGN WITH THE TOP OR BOTTOM OF A JOIST TYPE FLOOR SYSTEM.
2. BUILDSHIELD FIRESTOP SHOULD NOT BE INSTALLED SUCH THAT THE FLANGE IS CUT FLUSH WITH THE EPS, AND ALIGNING IN THE CENTER OF THE RIM JOIST.
3. THE STAINLESS STEEL BARRIER MUST HAVE NO HOLES, GAPS, BUBBLES OR WRINKLES. IF NECESSARY, CUT SMALL PIECES OF STAINLESS STEEL BARRIER TO CREATE PATCHES.
4. OVERLAP SHOULD BE 2" MINIMUM AT ALL SEAMS AND PATCHES.

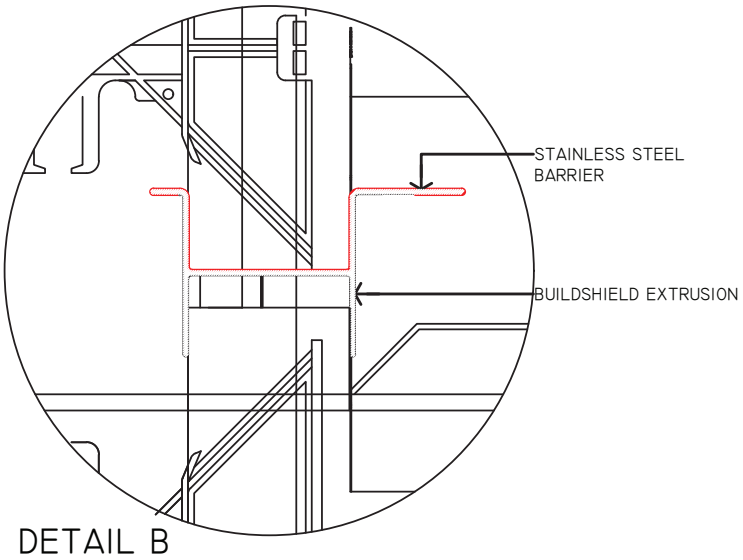

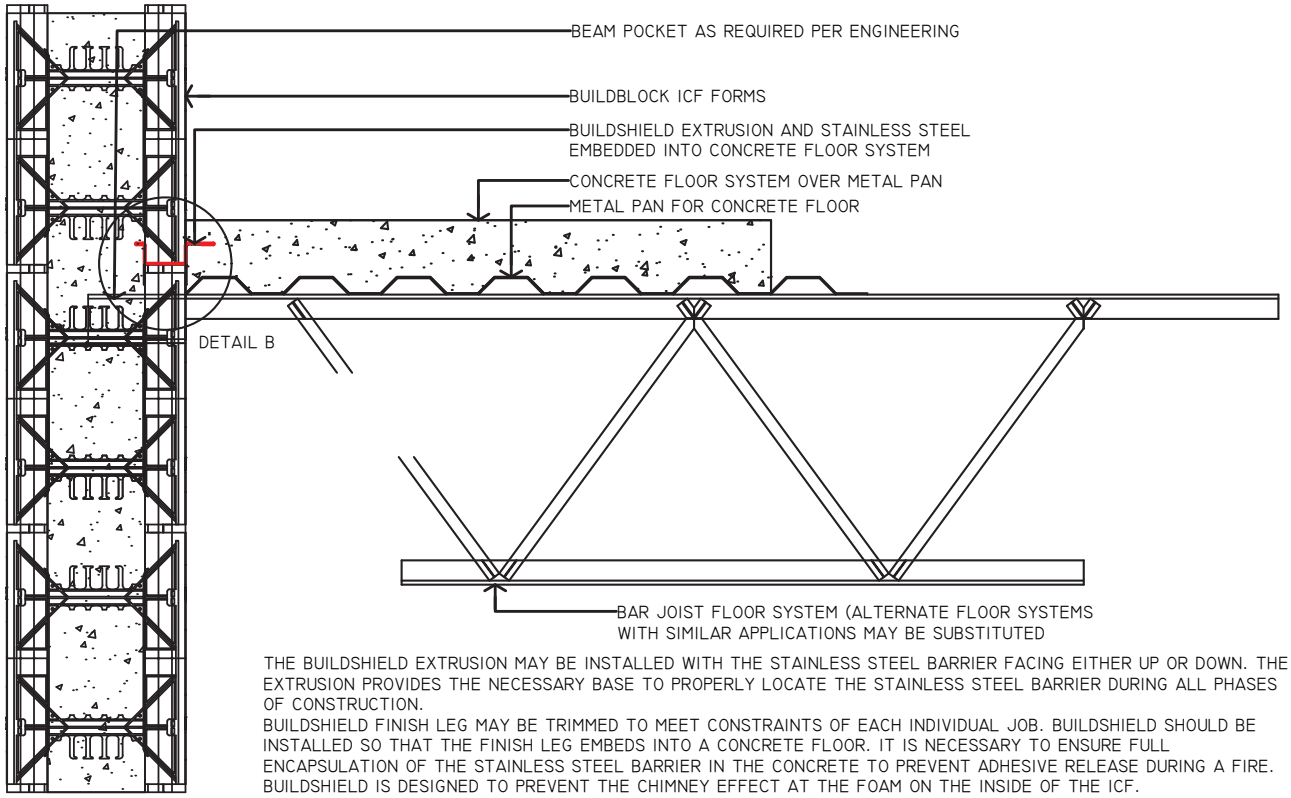

THE BUILDSHIELD EXTRUSION MAY BE INSTALLED WITH THE STAINLESS STEEL BARRIER FACING EITHER UP OR DOWN. THE EXTRUSION PROVIDES THE NECESSARY BASE TO PROPERLY LOCATE THE STAINLESS STEEL BARRIER DURING ALL PHASES OF CONSTRUCTION.
BUILDSHIELD FINISH LEG MAY BE TRIMMED TO MEET CONSTRAINTS OF EACH INDIVIDUAL JOB. BUILDSHIELD SHOULD BE INSTALLED SO THAT THE FINISH LEG EMBEDS INTO A CONCRETE FLOOR. IT IS NECESSARY TO ENSURE FULL ENCAPSULATION OF THE STAINLESS STEEL BARRIER IN THE CONCRETE TO PREVENT ADHESIVE RELEASE DURING A FIRE. BUILDSHIELD IS DESIGNED TO PREVENT THE CHIMNEY EFFECT AT THE FOAM ON THE INSIDE OF THE ICF.

BuildBlock® BUILDING SYSTEMS

9705 N. BROADWAY EXTENSION, SUITE 200, OKLAHOMA CITY, OK 73114
OFFICE: 405-840-3386 | TOLL FREE: 866-222-2575 | FAX: 831-597-0792
BUILDBLOCK.COM

BUILDSHIELD FIRESTOP CONCRETE FLOOR SYSTEM

DATE/REV	12/2015	SCALE	NTS	DETAIL SHEET
NOTES				63E

1. BUILDSHIELD FIRESTOP SHOULD BE PLACED SO THAT THE FLANGES ALIGN WITH THE TOP OR BOTTOM OF A JOIST TYPE FLOOR SYSTEM.
2. BUILDSHIELD FIRESTOP SHOULD NOT BE INSTALLED SUCH THAT THE FLANGE IS CUT FLUSH WITH THE EPS, AND ALIGNING IN THE CENTER OF THE RIM JOIST.
3. THE STAINLESS STEEL BARRIER MUST HAVE NO HOLES, GAPS, BUBBLES OR WRINKLES. IF NECESSARY, CUT SMALL PIECES OF STAINLESS STEEL BARRIER TO CREATE PATCHES.
4. OVERLAP SHOULD BE 2" MINIMUM AT ALL SEAMS AND PATCHES.
5. MECHANICAL ATTACHMENTS SUCH AS PAN HEAD SCREWS SHOULD BE PLACED THROUGH THE STAINLESS STEEL BARRIER INTO THE WOOD OR STEEL RIM JOISTS AT 12'O.C. THIS WILL PREVENT THE BARRIER FROM SAGGING DURING A FIRE. SEE DETAIL A.

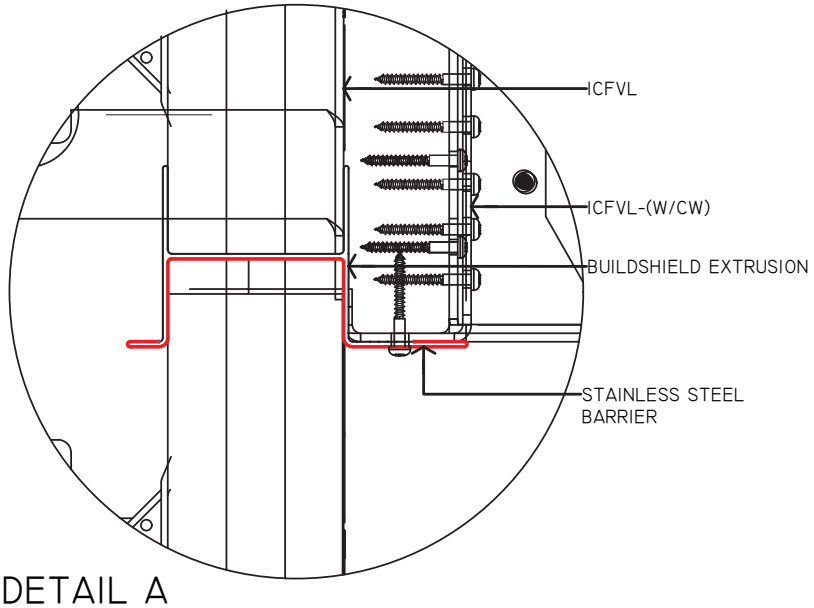

DETAIL A

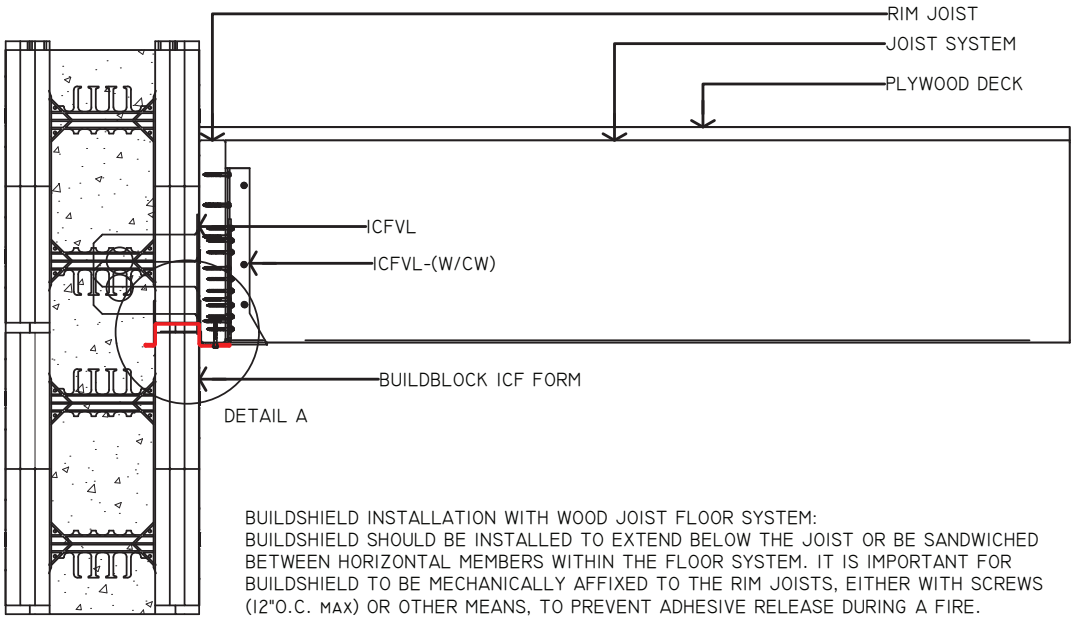

BUILDSHIELD INSTALLATION WITH WOOD JOIST FLOOR SYSTEM:
BUILDSHIELD SHOULD BE INSTALLED TO EXTEND BELOW THE JOIST OR BE SANDWICHED BETWEEN HORIZONTAL MEMBERS WITHIN THE FLOOR SYSTEM. IT IS IMPORTANT FOR BUILDSHIELD TO BE MECHANICALLY AFFIXED TO THE RIM JOISTS, EITHER WITH SCREWS (12"O.C. MAX) OR OTHER MEANS, TO PREVENT ADHESIVE RELEASE DURING A FIRE. BUILDSHIELD IS DESIGNED TO PREVENT THE CHIMNEY EFFECT AT THE FOAM ON THE INSIDE OF THE ICF.

BuildBlock® BUILDING SYSTEMS

9705 N. BROADWAY EXTENSION, SUITE 200, OKLAHOMA CITY, OK 73114
OFFICE: 405-840-3386 | TOLL FREE: 866-222-2575 | FAX: 831-597-0792
BUILDBLOCK.COM

BUILDSHIELD FIRESTOP WITH WOOD/METAL FLOOR SYSTEM

DATE/REV	12/2015	SCALE	NTS	DETAIL SHEET
NOTES				63F

CONSTRUCTION SHALL BE IN ACCORDANCE WITH ALL APPLICABLE LOCAL AND NATIONAL CODES. ALL DRAWINGS ARE SUBJECT TO CHANGE WITHOUT NOTICE.

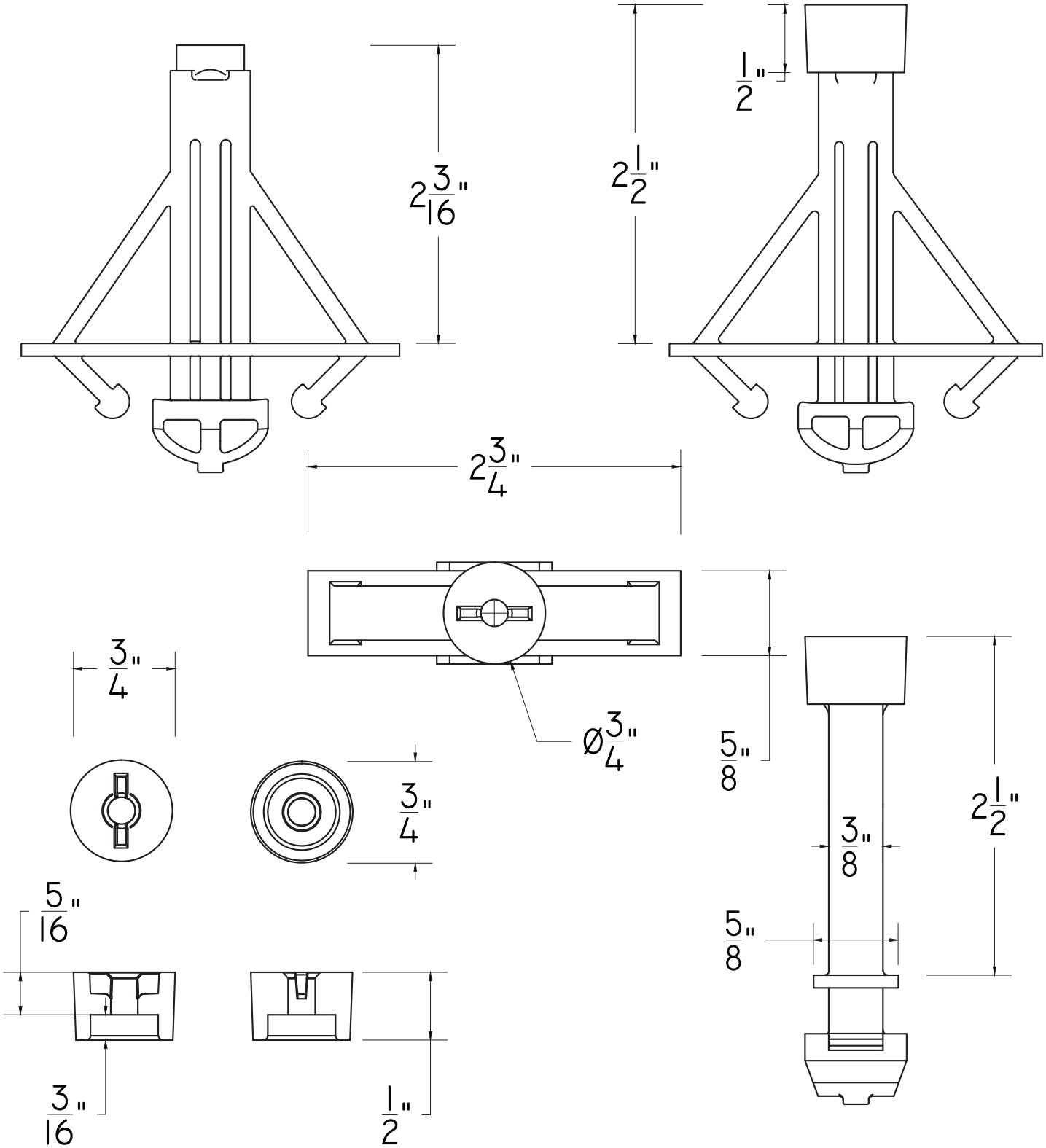

BuildBlock® BUILDING SYSTEMS

BUILDBLOCK HARDWALL PRODUCT DETAIL

DATE/REV	12/2015	SCALE	NTS	DETAIL SHEET
NOTES				64A

9705 N. BROADWAY EXTENSION, SUITE 200, OKLAHOMA CITY, OK 73114
OFFICE: 405-840-3386 | TOLL FREE: 866-222-2575 | FAX: 831-597-0792
BUILDBLOCK.COM

CONSTRUCTION SHALL BE IN ACCORDANCE WITH ALL APPLICABLE LOCAL AND NATIONAL CODES. ALL DRAWINGS ARE SUBJECT TO CHANGE WITHOUT NOTICE.

BUILDBLOCK HARDWALL IS A TWO PART ASSEMBLY ALLOWING CONNECTION OF PLYWOOD FORMING MATERIAL TO A BUILDLOCK KNOCKDOWN PANEL. THIS CREATES A CONCRETE FACED WALL WITH A BUILT IN INSULATION LAYER. THIS SOLUTION IS APPROPRIATE FOR STAIRWELLS, ELEVATOR SHAFTS, BASEMENT PARKING, AND LOWER WALL SECTIONS IN MANUFACTURING AND WAREHOUSE FACILITIES WHERE IMPACT RESISTANCE, DURABILITY OR REMOVAL OF ALL FLAMMABLE MATERIAL IS DESIRED OR REQUIRED.

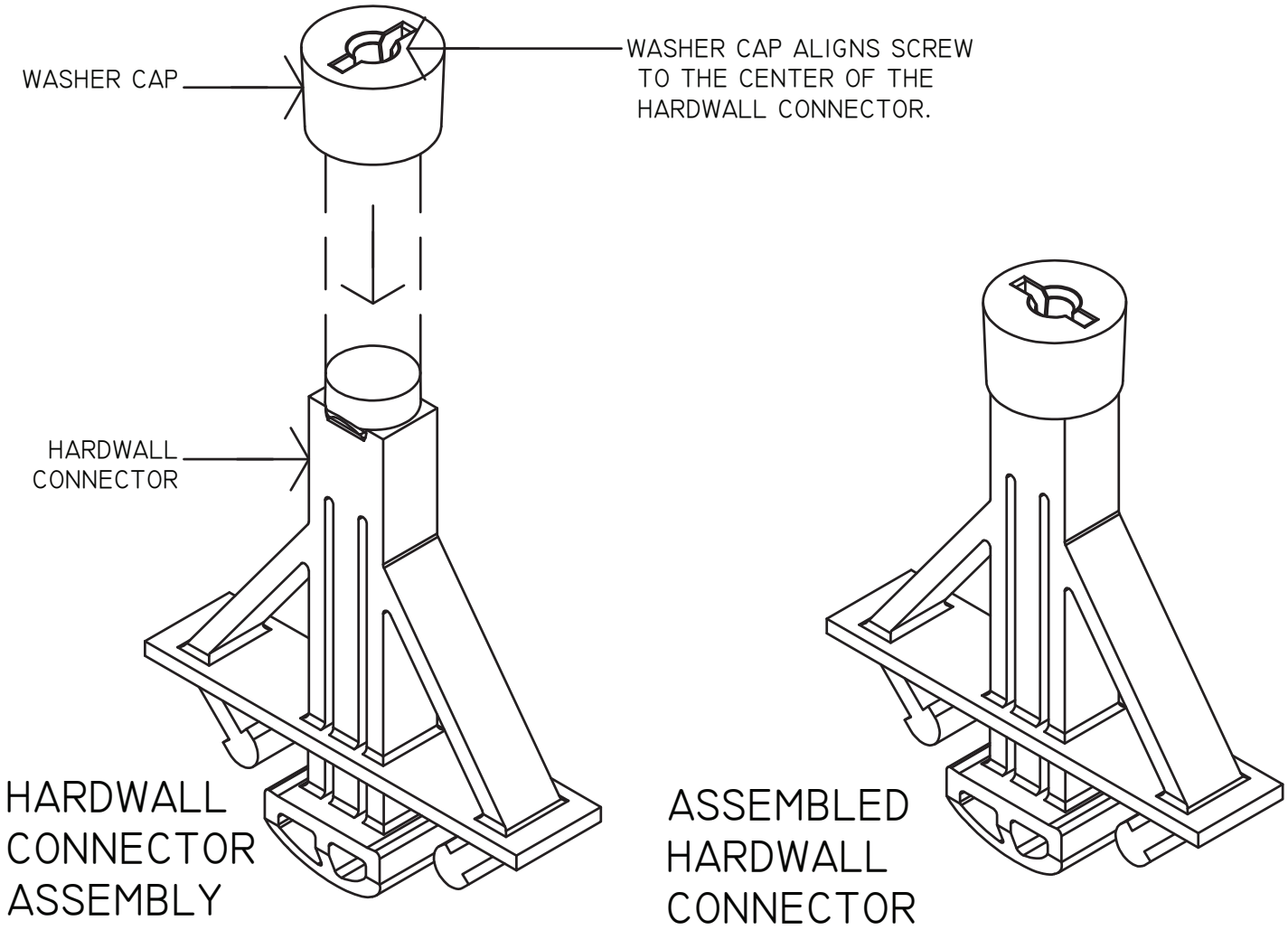

HARDWALL CONNECTOR ASSEMBLY:

1. SEPARATE THE WASHER CAP FROM THE HARDWALL CONNECTOR BY REMOVING THE SMALL TAB CONNECTING THE 2 PARTS.
2. PRESS THE CUP OF THE WASHER CAP ONTO THE END OF THE HARDWALL CONNECTOR FULLY.
3. TO FULLY EMBED THE CONNECTOR INTO THE WASHER IT MAY BE NECESSARY TO PRESS IT FIRMLY AGAINST A HARD SURFACE.

BuildBlock® BUILDING SYSTEMS

9705 N. BROADWAY EXTENSION, SUITE 200, OKLAHOMA CITY, OK 73114
OFFICE: 405-840-3386 | TOLL FREE: 866-222-2575 | FAX: 831-597-0792
BUILDBLOCK.COM

BUILDBLOCK HARDWALL CONNECTOR DETAIL

DATE/REV	12/2015	SCALE	NTS	DETAIL SHEET
NOTES				64B

CONSTRUCTION SHALL BE IN ACCORDANCE WITH ALL APPLICABLE LOCAL AND NATIONAL CODES. ALL DRAWINGS ARE SUBJECT TO CHANGE WITHOUT NOTICE.

HARDWALL CONNECTOR ASSEMBLY:

1. SEPARATE THE WASHER CAP FROM THE HARDWALL CONNECTOR BY REMOVING THE SMALL TAB CONNECTING THE 2 PARTS.
2. PRESS THE CUP OF THE WASHER CAP ONTO THE END OF THE HARDWALL CONNECTOR FULLY.
3. TO FULLY EMBED THE CONNECTOR INTO THE WASHER IT MAY BE NECESSARY TO PRESS IT FIRMLY AGAINST A HARD SURFACE.
4. MAKE SURE TO ORIENT BRIDGES CORRECTLY BEFORE CONNECTING TO BUILDLOCK PANELS.
5. ATTACH THE WEB BRIDGES TO THE BUILDLOCK PANEL BY POSITIONING THEM OVER THE LOCKING TABS ON THE INNER FACE OF THE PANEL. A SHARP BLOW MAY BE REQUIRED TO FULLY SEAT THEM.
6. ATTACH THE HARDWALL CONNECTOR WITH THE WASHER CAP IN PLACE TO THE WEB BRIDGES, OPPOSITE THE FOAM PANEL.
7. PREFERRED METHOD: WHEN THE FOAM, BRIDGE, AND HARDWALL CONNECTOR ARE ASSEMBLED, PLACE A PRE-CUT AND DRILLED SHEET OF PLYWOOD OR OTHER FORMING MATERIAL AGAINST THE WASHER CAP FACES. BEGIN FASTENING THEM TOGETHER USING 1-5/8" COARSE THREAD PAN HEAD SCREWS. THE HOLES IN THE WASHER CAP ARE EASILY ALIGNED WITH THE DRILLED SCREW HOLES. THE SELF ALIGNING WASHER CAP POSITIONS THE SCREW IN THE CENTER OF THE CONNECTOR.
8. ALTERNATE METHOD: ASSEMBLE THE HARDWALL CONNECTOR AND WASHER CAP AND ATTACH TO THE PLYWOOD PANEL WITH 1-5/8" COARSE THREAD PAN HEAD SCREWS. LOCK THE ASSEMBLED PANEL TO THE FOAM PANEL WITH THE WEB BRIDGES. WHEN USING THIS METHOD, IT IS IMPERATIVE TO AVOID BENDING OR BREAKING THE SCREWS WHILE MOVING THE PLYWOOD PANEL ONCE ASSEMBLED. IT MAY ALSO BE NECESSARY TO RE-ORIENT THE HARDWALL CONNECTOR BODY TO ALIGN WITH THE WEB BRIDGES, AS IT MAY TURN WHEN TIGHTENING THE SCREWS.

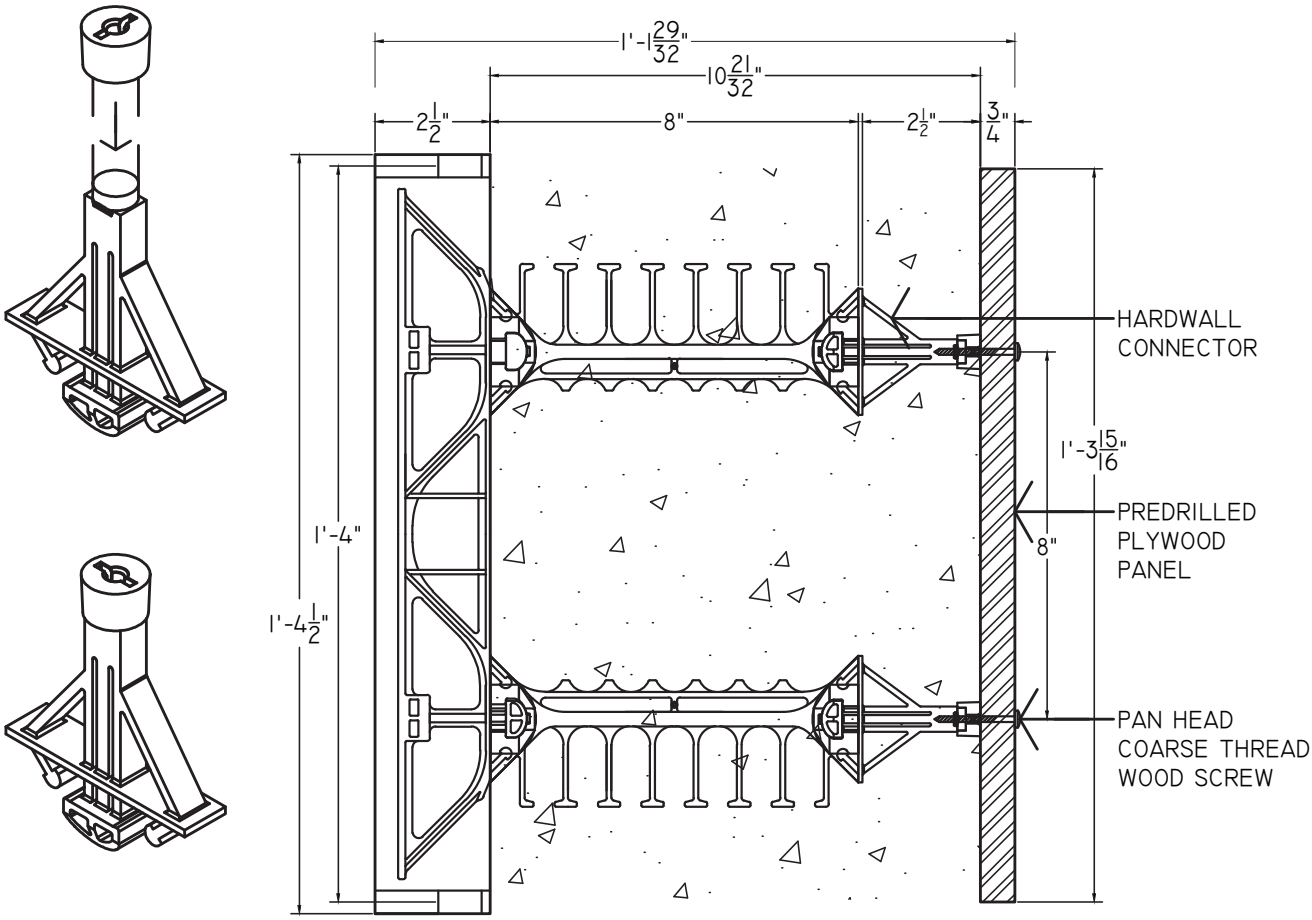

ALL PLYWOOD FOR FORMS SHOULD BE CUT 1/8" SHORT IN LENGTH TO ACCOUNT FOR THE NATURAL ICF FORM SHRINKAGE. HEIGHT MAY BE REDUCED 1/16" TO ACCOUNT FOR SHRINKAGE AND COMPRESSION. STANDARD ICF BRACING AND ALIGNMENT SHOULD BE INSTALLED ON THE WOOD SIDE. FOLLOW ALL MANUFACTURER RECOMMENDATIONS FOR INSTALLATION OF ICF BRACING.

BuildBlock BUILDING SYSTEMS	BUILDBLOCK HARDWALL ASSEMBLY				
	DATE/REV	12/2015	SCALE	NTS	DETAIL SHEET
	NOTES				64C
9705 N. BROADWAY EXTENSION, SUITE 200, OKLAHOMA CITY, OK 73114 OFFICE: 405-840-3386 | TOLL FREE: 866-222-2575 | FAX: 831-597-0792 BUILDBLOCK.COM	CONSTRUCTION SHALL BE IN ACCORDANCE WITH ALL APPLICABLE LOCAL AND NATIONAL CODES. ALL DRAWINGS ARE SUBJECT TO CHANGE WITHOUT NOTICE.				

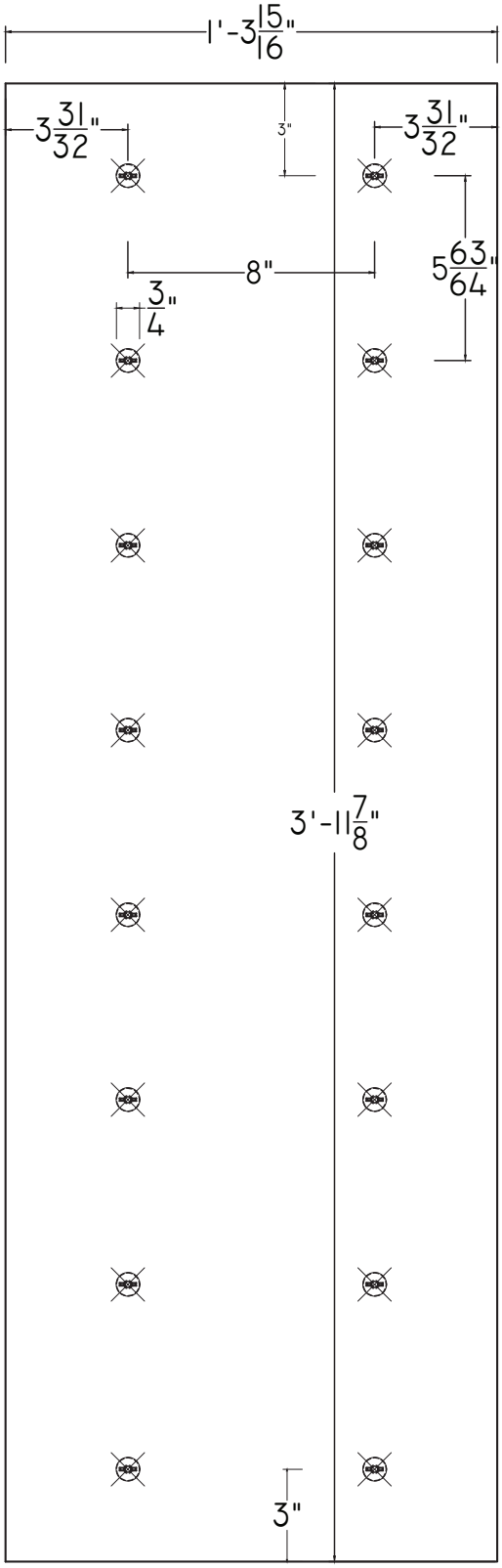

HARDWALL TEMPLATE

A PAPER TEMPLATE IS DOWNLOADABLE FROM THE BUILDBLOCK WEBSITE AND MAY BE PRINTED TO SCALE TO CREATE A SUITABLE TEMPLATE FROM WOOD, SHEET METAL, OR OTHER DURABLE MATERIAL.

TEMPLATES SHOULD BE DRILLED WITH A 1/8" - 3/16" DRILL BIT. HOLES SHOULD BE PERPENDICULAR TO THE FACE OF THE PLYWOOD.

ALL PLYWOOD FOR FORMS SHOULD BE CUT 1/8" SHORT IN LENGTH TO ACCOUNT FOR THE NATURAL ICF FORM SHRINKAGE. HEIGHT MAY BE REDUCED 1/16" TO ACCOUNT FOR SHRINKAGE AND COMPRESSION. STANDARD ICF BRACING AND ALIGNMENT SHOULD BE INSTALLED ON THE WOOD SIDE. FOLLOW ALL MANUFACTURER RECOMMENDATIONS FOR INSTALLATION OF ICF BRACING.

IT IS HIGHLY RECOMMENDED TO PRE-DRILL ALL HOLES IN THE HARDWALL PANEL MATERIAL TO MAKE INSTALLATION UNIFORM AND ASSEMBLY ACCURATE.

A COARSE THREAD, PAN HEAD SCREW SHOULD BE USED TO ASSEMBLE THE FORMS. COUNTERSINK SCREWS SHOULD BE AVOIDED AS THEY CAN PULL THROUGH THE PLYWOOD WHEN CONCRETE PRESSURE IS APPLIED.

TO ASSEMBLE THE FORMS, ALIGN HOLES AND CONNECTORS BY STARTING THE SCREW THROUGH THE PLYWOOD. POSITION THE SCREW IN THE CENTER OF THE CAP.

DRIVE THE SCREW FULLY TO THE FACE OF THE PLYWOOD. DO NOT OVER TIGHTEN THE SCREW, OR SINK THE SCREW INTO THE FORM.

BuildBlock BUILDING SYSTEMS
9705 N. BROADWAY EXTENSION, SUITE 200, OKLAHOMA CITY, OK 73114
OFFICE: 405-840-3386 | TOLL FREE: 866-222-2575 | FAX: 831-597-0792
BUILDBLOCK.COM

BUILDBLOCK HARDWALL FORM TEMPLATE

DATE/REV	12/2015	SCALE	NTS	DETAIL SHEET
NOTES				64D

BUILDBLOCK HARDWALL FINISH OPTIONS

ONCE THE PLYWOOD IS REMOVED THE WASHER CAPS WILL BE VISIBLE IN THE FACE OF THE CONCRETE.

IF THIS IS THE DESIRED FINISH THE CAPS MAY BE LEFT IN PLACE TO INDICATE ATTACHMENT POINTS IN THE WALL. ATTACH OTHER FINISHES AS DESIRED.

TO REMOVE WASHER CAPS, USE A LARGE FLAT BLADE SCREWDRIVER TO TWIST AND PULL THE WASHER CAP OUT OF THE CAVITY. THE WASHER CAP IS BEVELED AND WILL RELEASE FROM THE CONCRETE. IF NECESSARY THE WASHER CAPS MAY BE REMOVED BY HAND, WITH A SMALL PICK, OR PLIERS. THE HARDWALL BODY WILL REMAIN EMBEDDED IN THE WALL.

TO FINISH THE ENTIRE WALL WITH STUCCO, PLASTER, OR OTHER FINISH, REMOVE CAPS AND FILL REMAINING CAVITY WITH PATCH, OR A SUITABLE CONCRETE FILLER AND TROWEL SMOOTH PRIOR TO APPLYING THE WALL FINISH ACCORDING TO MANUFACTURER SPECIFICATIONS.

WASHER CAP SPACING:
6 INCHES HORIZONTAL
8 INCHES VERTICAL

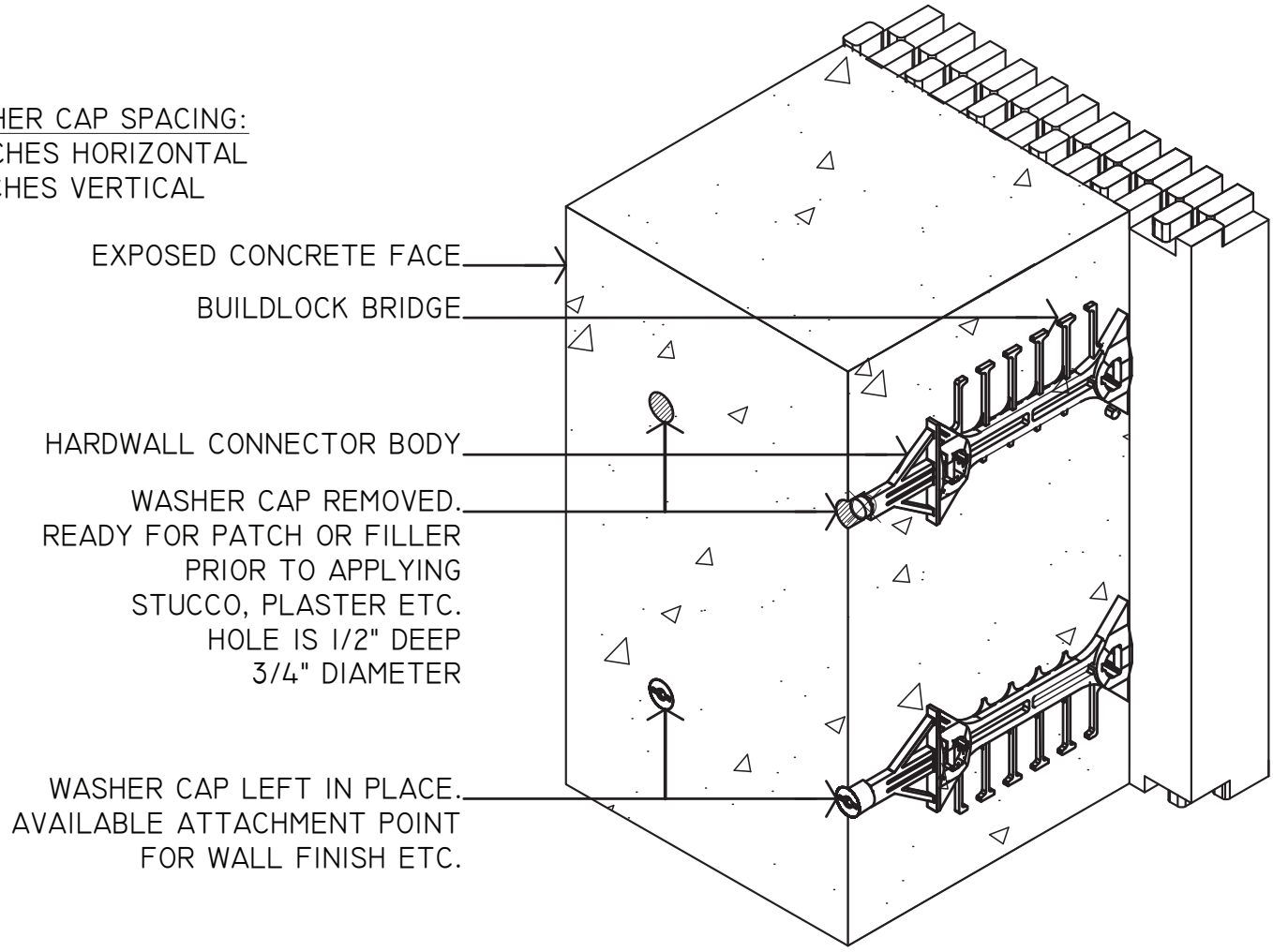

BuildBlock® BUILDING SYSTEMS

9705 N. BROADWAY EXTENSION, SUITE 200, OKLAHOMA CITY, OK 73114
OFFICE: 405-840-3386 | TOLL FREE: 866-222-2575 | FAX: 831-597-0792
BUILDBLOCK.COM

BUILDBLOCK HARDWALL FINISHING

DATE/REV	12/2015	SCALE	NTS	DETAIL SHEET
NOTES				64E

BUILDBLOCK HARDWALL MAY BE USED AS A STANDALONE SYSTEM IN STAIRWELLS, ELEVATOR SHAFTS, BASEMENT PARKING, AND IN WAREHOUSE AND MANUFACTURING FACILITIES, OR WHERE IMPACT RESISTANCE, DURABILITY, OR REMOVAL OF ALL FLAMMABLE MATERIAL IS DESIRED OR REQUIRED. IT MAY ALSO BE USED FOR LOWER WALL SECTIONS REQUIRING THE SAME PROPERTIES, BUT ALLOWING WALLS ABOVE THEM TO BE FULL ICF WALLS TO EMPLOY THE ADVANTAGES OF GREATER INSULATION, EASIER ATTACHMENT OF FINISHES AND OTHER WALL DECOR. WHEN STACKING ICF ABOVE HARDWALL, ALIGN THE FOAM PANELS ON THE ONE SIDE, AND SUPPORT THE FOAM ON THE OTHER ON TOP OF THE CONCRETE WALL.

BUILDBLOCK THERMALSERT MAY BE USED ON THE FOAM SIDE OF A HARDWALL INSTALLATION TO INCREASE THE INSULATION VALUE.

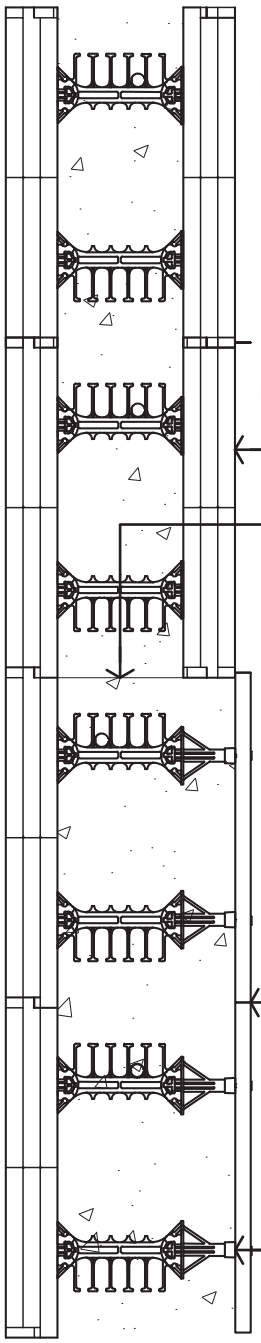

HARDWALL AS INSTALLED ICF ABOVE

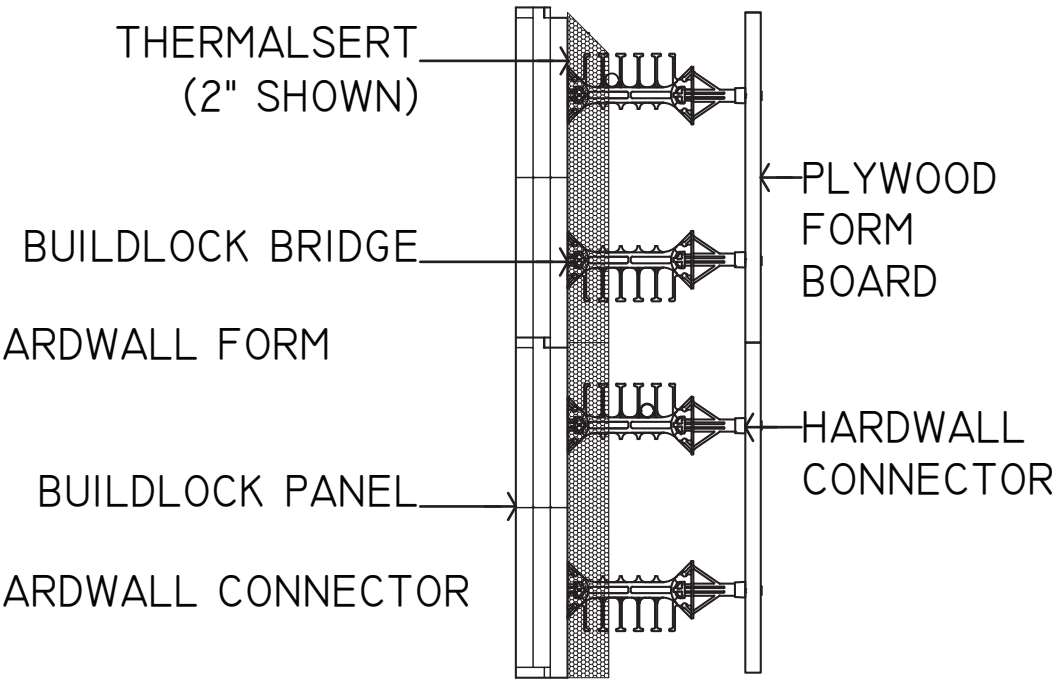

HARDWALL WITH THERMALSERT

BuildBlock® BUILDING SYSTEMS

9705 N. BROADWAY EXTENSION, SUITE 200, OKLAHOMA CITY, OK 73114
OFFICE: 405-840-3386 | TOLL FREE: 866-222-2575 | FAX: 831-597-0792
BUILDBLOCK.COM

BUILDBLOCK HARDWALL ALTERNATIVE APPLICATION

DATE/REV	12/2015	SCALE	NTS	DETAIL SHEET
NOTES				64F

CONSTRUCTION SHALL BE IN ACCORDANCE WITH ALL APPLICABLE LOCAL AND NATIONAL CODES. ALL DRAWINGS ARE SUBJECT TO CHANGE WITHOUT NOTICE.

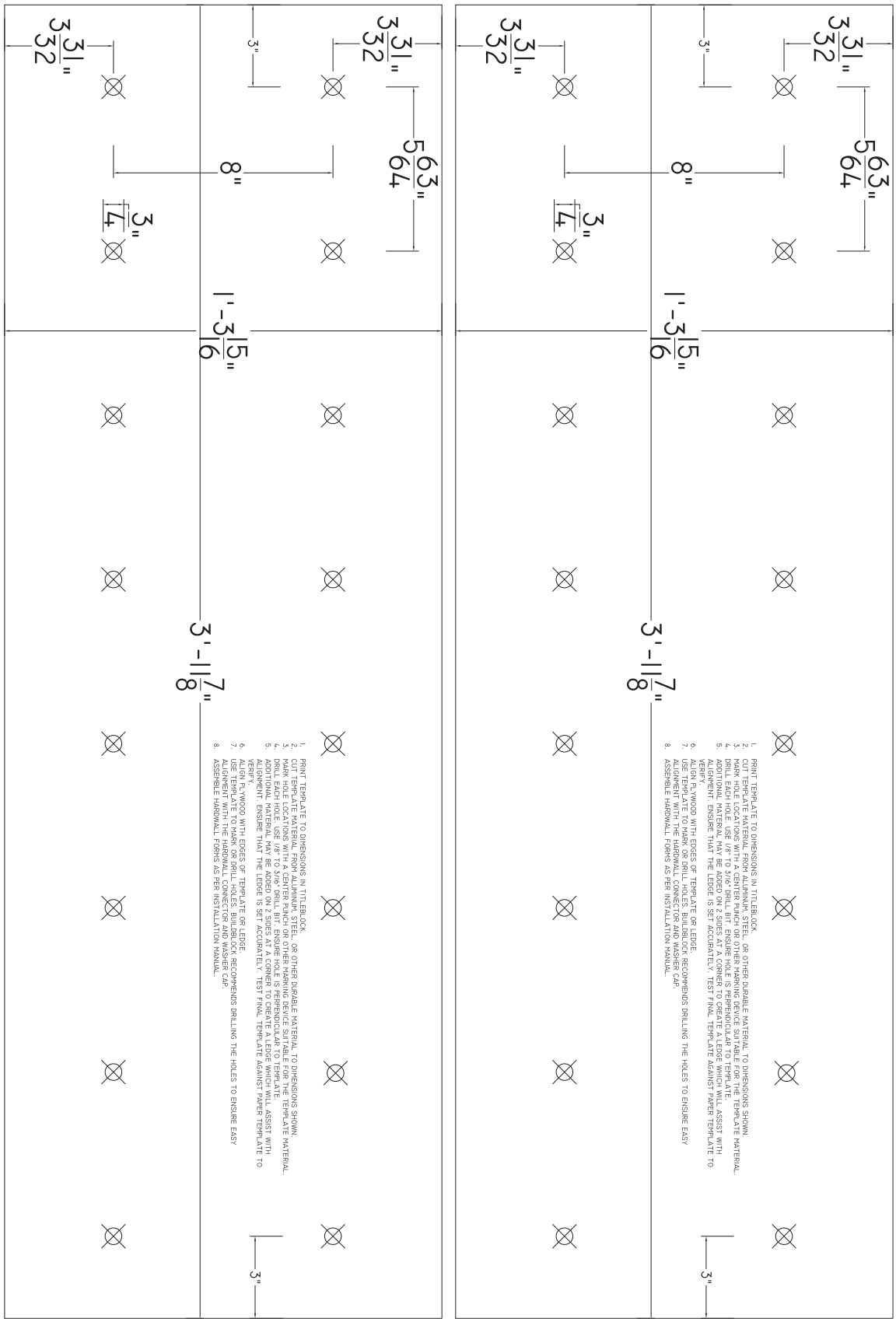

PRINT THIS TEMPLATE AT FULL SCALE: OVERSIZE A0 (35.65 X 49.01)

BuildBlock BUILDING SYSTEMS

9705 N. BROADWAY EXTENSION, SUITE 200, OKLAHOMA CITY, OK 73114
OFFICE: 405-840-3386 | TOLL FREE: 866-222-2575 | FAX: 831-597-0792
BUILDBLOCK.COM

BUILDBLOCK HARDWALL FORM TEMPLATE FULL SIZE

DATE/REV	12/2015	SCALE	NTS	DETAIL SHEET
NOTES				64G

1 / XX TOP VIEW
SCALE: NTS

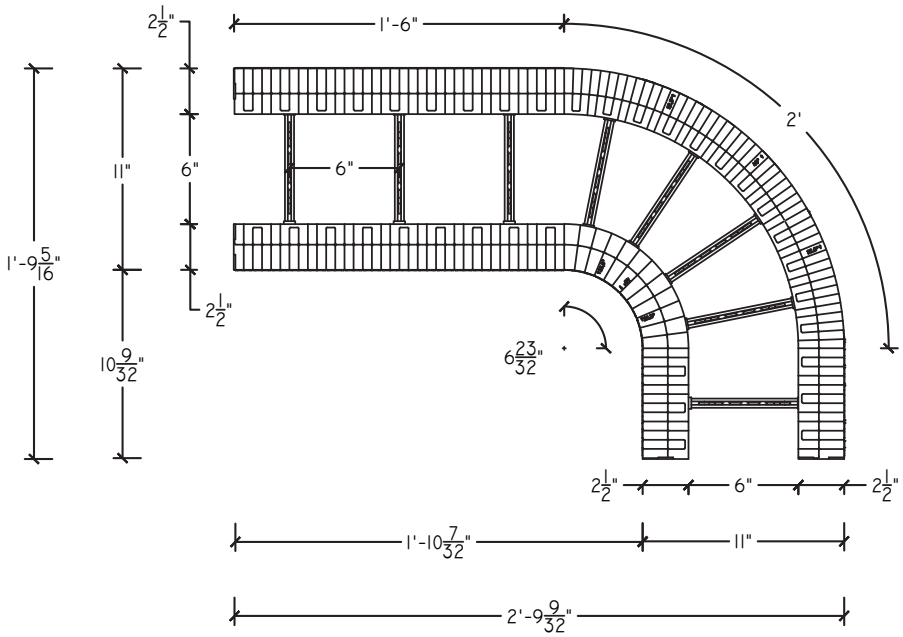

2 / XX SIDE VIEW
SCALE: NTS

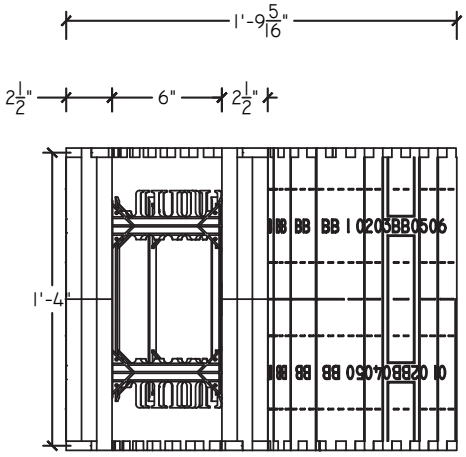

NOTES:
BUILDRADIUS FORMS ARE SIZED BY THE LENGTH OF THE OUTER PANEL AT A 90° ARC. THE RADIUS AND DIAMETER OF THE FORMS ARE GIVEN IN THE ACCOMPANYING CHART.
THIS FORM INTEGRATES WITH STRAIGHT FORMS AND DOES NOT REQUIRE CUTTING TO PROVIDE 12 INCH OFFSET.
BLOCK COURSING IS 1'-4".

3 / XX PERSPECTIVE VIEW
SCALE: NTS

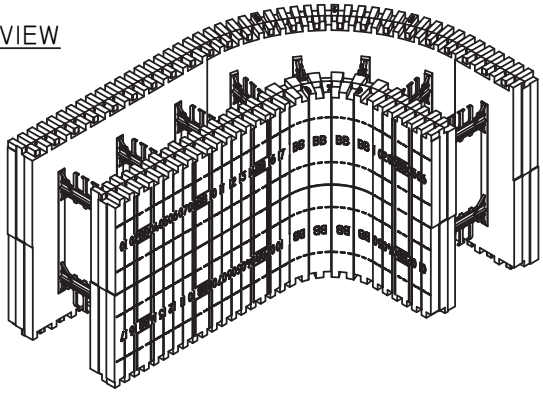

2FT BUILDRADIUS FORM SPECIFICATIONS		
	IMPERIAL	METRIC
BLOCK ANGLE	90°	90°
OUTSIDE PANEL AREA	5.33FT²	0.495M²
INSIDE PANEL AREA	4.19FT²	0.456M²
OUTER PANEL ARC LENGTH	2-FT 0-IN	60.96CM
INNER PANEL ARC LENGTH	1-FT 8-3/16-IN	51CM
OUTER RADIUS	1-FT3-1/4-IN	38.81CM
INNER RADIUS	0-FT 8-1/2-IN	10.97CM
STRAIGHT SECTION LENGTHS	6-IN / 18-IN	15.2CM / 45.7CM
CONCRETE VOLUME	0.065296 YD³	0.043041 M³

BuildBlock® BUILDING SYSTEMS

9705 N. BROADWAY EXTENSION, SUITE 200, OKLAHOMA CITY, OK 73114
OFFICE: 405-840-3386 | TOLL FREE: 866-222-2575 | FAX: 831-597-0792
BUILDBLOCK.COM

BUILDRADIUS 2-FOOT ARC RADIUS PRODUCT DETAIL

DATE/REV	8/2016	SCALE	NTS	DETAIL SHEET
NOTES				65A

1/XX TOP VIEW
SCALE: NTS

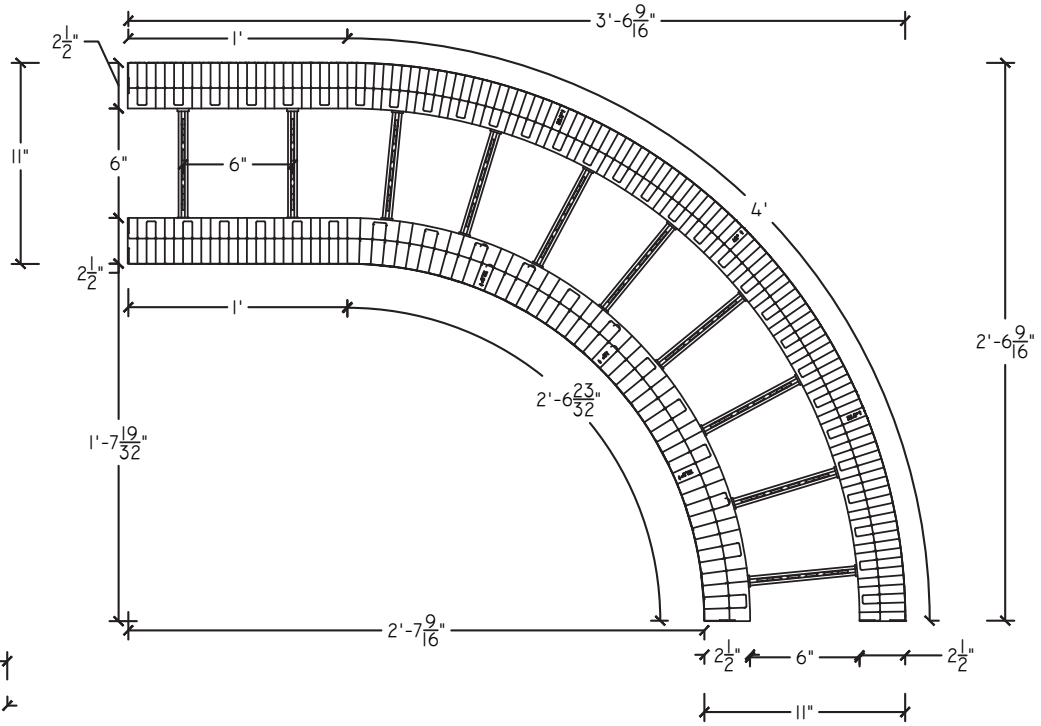

2/XX SIDE VIEW
SCALE: NTS

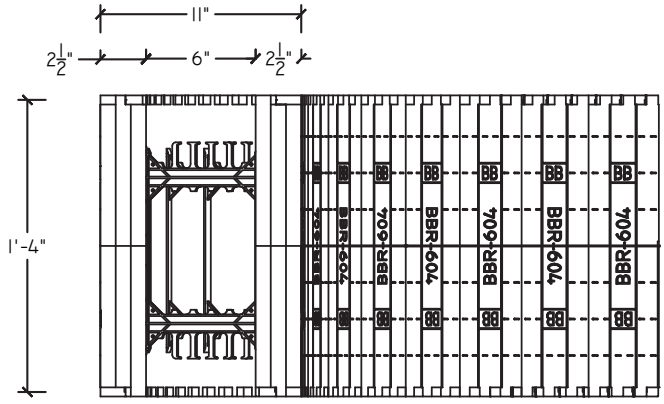

NOTES:
BUILDRADIUS FORMS ARE SIZED BY THE LENGTH OF THE OUTER PANEL AT A 90° ARC. THE RADIUS AND DIAMETER OF THE FORMS ARE GIVEN IN THE ACCOMPANYING CHART.
THIS FORM INTEGRATES WITH STRAIGHT FORMS AND DOES NOT REQUIRE CUTTING TO PROVIDE 12 INCH OFFSET.
BLOCK COURSING IS 1'-4".

3/XX PERSPECTIVE VIEW
SCALE: NTS

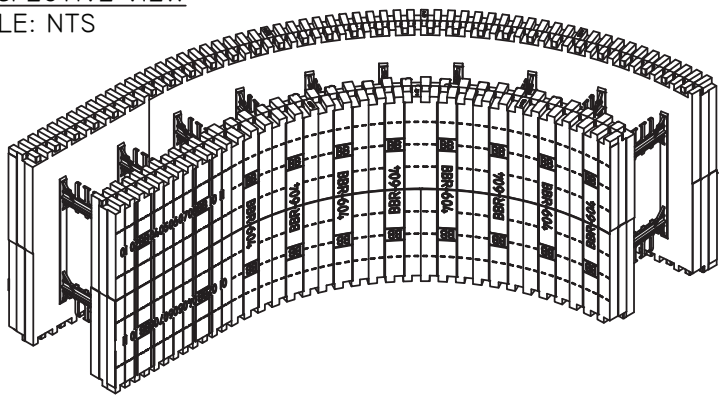

4FT BUILDRADIUS FORM SPECIFICATIONS		
	IMPERIAL	METRIC
BLOCK ANGLE	90°	90°
OUTSIDE PANEL AREA	6.67FT²	0.6193M²
INSIDE PANEL AREA	4.74FT²	0.4406M²
OUTER PANEL ARC LENGTH	4-FT 0-IN	121.92CM
INNER PANEL ARC LENGTH	2-FT 6-11/16-IN	78CM
OUTER RADIUS	2-FT 6-9/16-IN	77.62CM
INNER RADIUS	1-FT 7-9/16-IN	49.68CM
STRAIGHT SECTION LENGTHS	12-IN	30.5-CM
CONCRETE VOLUME	0.105645YD³	0.080771 M³

BuildBlock® BUILDING SYSTEMS

9705 N. BROADWAY EXTENSION, SUITE 200, OKLAHOMA CITY, OK 73114
OFFICE: 405-840-3386 | TOLL FREE: 866-222-2575 | FAX: 831-597-0792
BUILDBLOCK.COM

BUILDRADIUS 4-FOOT ARC RADIUS PRODUCT DETAIL

DATE/REV	8/2016	SCALE	NTS	DETAIL SHEET
NOTES				65B

1/XX TOP VIEW
SCALE: NTS

NOTES:
BUILDRADIUS FORMS ARE SIZED BY THE LENGTH OF THE OUTER PANEL AT A 90° ARC. THE RADIUS AND DIAMETER OF THE FORMS ARE GIVEN IN THE ACCOMPANYING CHART.
TO CREATE A RUNNING BOND WHEN INTEGRATING WITH A STRAIGHT BLOCK WALL, CUT THE FORM IN HALF, VERTICALLY AT THE CENTERLINE ( ) USING ONE HALF OF THE BLOCK AT EACH END ON EVERY OTHER COURSE.
BLOCKS STACK @ 1'-4" INCREMENTS

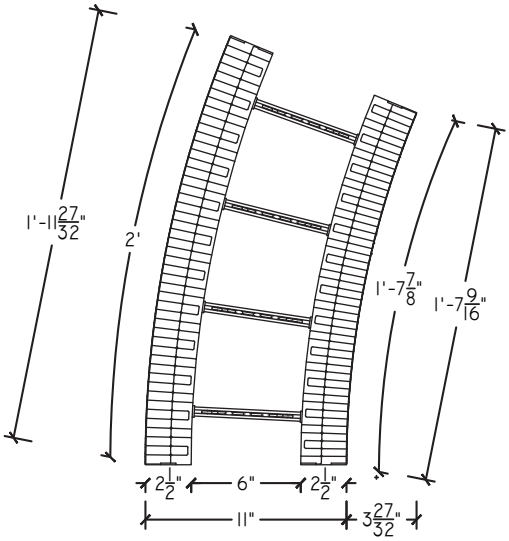

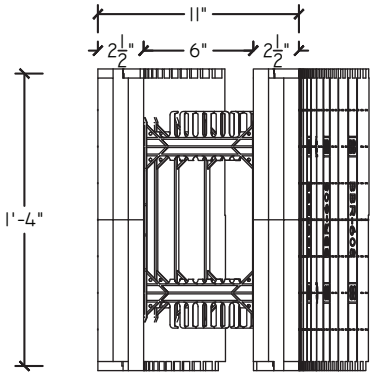

1/XX END VIEW
SCALE: NTS

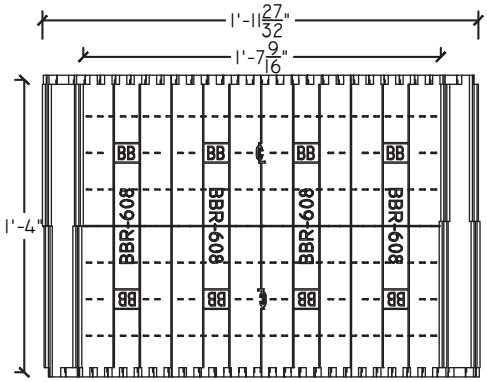

1/XX SIDE VIEW
SCALE: NTS

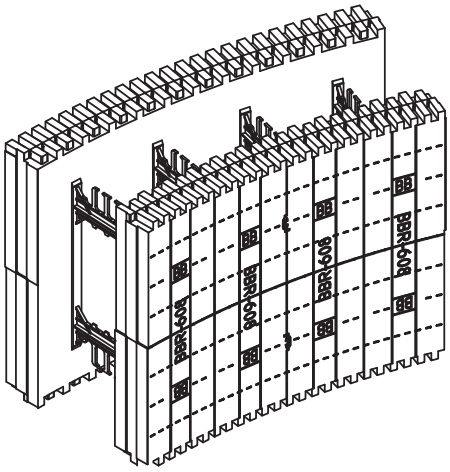

1/XX PERSPECTIVE VIEW
SCALE: NTS

8FT BUILDRADIUS FORM SPECIFICATIONS		
	IMPERIAL	METRIC
BLOCK ANGLE	22.5°	22.5°
OUTSIDE PANEL AREA	2.67FT²	.2477M²
INSIDE PANEL AREA	2.19FT²	.2038M²
OUTER PANEL ARC LENGTH	2-FT 0-IN	60.96M
INNER PANEL ARC LENGTH	1-FT 7-11/16-IN	50CM
OUTER RADIUS	5-FT 1-1/8-IN	155.23CM
INNER RADIUS	4-FT2-1/8-IN	127.41CM
STRAIGHT SECTION LENGTHS	0-IN	0-CM
CONCRETE VOLUME	0.045099 YD³	0.03448 M³

BuildBlock BUILDING SYSTEMS

9705 N. BROADWAY EXTENSION, SUITE 200, OKLAHOMA CITY, OK 73114
OFFICE: 405-840-3386 | TOLL FREE: 866-222-2575 | FAX: 831-597-0792
BUILDBLOCK.COM

BUILDRADIUS 8-FOOT ARC RADIUS PRODUCT DETAIL

DATE/REV	8/2016	SCALE	NTS	DETAIL SHEET
NOTES				65C

CONSTRUCTION SHALL BE IN ACCORDANCE WITH ALL APPLICABLE LOCAL AND NATIONAL CODES. ALL DRAWINGS ARE SUBJECT TO CHANGE WITHOUT NOTICE.

1/XX TOP VIEW
SCALE: NTS

NOTES:
BUILDRADIUS FORMS ARE SIZED BY THE LENGTH OF THE OUTER PANEL AT A 90° ARC. THE RADIUS AND DIAMETER OF THE FORMS ARE GIVEN IN THE ACCOMPANYING CHART.
TO CREATE A RUNNING BOND WHEN INTEGRATING WITH A STRAIGHT BLOCK WALL, CUT THE FORM IN HALF, VERTICALLY AT THE CENTERLINE ( ) USING ONE HALF OF THE BLOCK AT EACH END ON EVERY OTHER COURSE.
BLOCKS STACK @ 1'-4" INCREMENTS

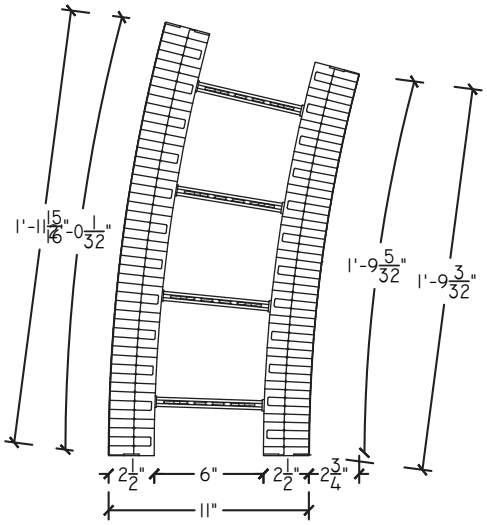

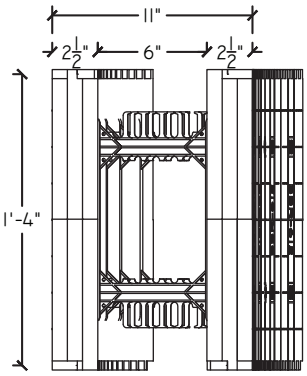

1/XX END VIEW
SCALE: NTS

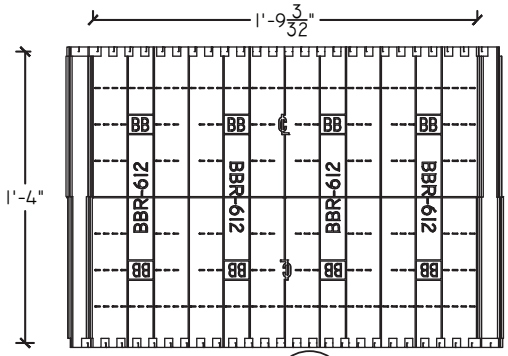

1/XX SIDE VIEW
SCALE: NTS

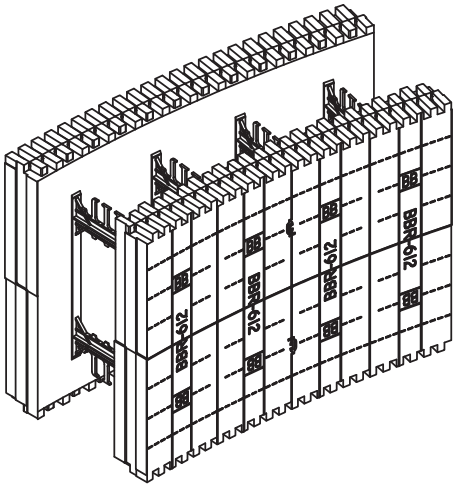

1/XX PERSPECTIVE VIEW
SCALE: NTS

12FT BUILDRADIUS FORM SPECIFICATIONS		
	IMPERIAL	METRIC
BLOCK ANGLE	15°	15°
OUTSIDE PANEL AREA	2.67FT²	.2477M²
INSIDE PANEL AREA	2.35FT²	.2180M²
OUTER PANEL ARC LENGTH	2FT 0IN	60.96M
INNER PANEL ARC LENGTH	1-FT 9-1/8-IN	54CM
OUTER RADIUS	7-FT 7-11/16-IN	232.85CM
INNER RADIUS	6-FT 8-11/16-IN	204.82CM
STRAIGHT SECTION LENGTHS	0-IN	0-CM

BuildBlock® BUILDING SYSTEMS

9705 N. BROADWAY EXTENSION, SUITE 200, OKLAHOMA CITY, OK 73114
OFFICE: 405-840-3386 | TOLL FREE: 866-222-2575 | FAX: 831-597-0792
BUILDBLOCK.COM

BUILDRADIUS 12-FOOT ARC RADIUS PRODUCT DETAIL

DATE/REV	8/2016	SCALE	NTS	DETAIL SHEET
NOTES				65D

1/XX TOP VIEW
SCALE: NTS

NOTES:
BUILDRADIUS FORMS ARE SIZED BY THE LENGTH OF THE OUTER PANEL AT A 90° ARC. THE RADIUS AND DIAMETER OF THE FORMS ARE GIVEN IN THE ACCOMPANYING CHART.
TO CREATE A RUNNING BOND WHEN INTEGRATING WITH A STRAIGHT BLOCK WALL, CUT THE FORM IN HALF, VERTICALLY AT THE CENTERLINE ( ) USING ONE HALF OF THE BLOCK AT EACH END ON EVERY OTHER COURSE.
BLOCKS STACK @ 1'-4" INCREMENTS

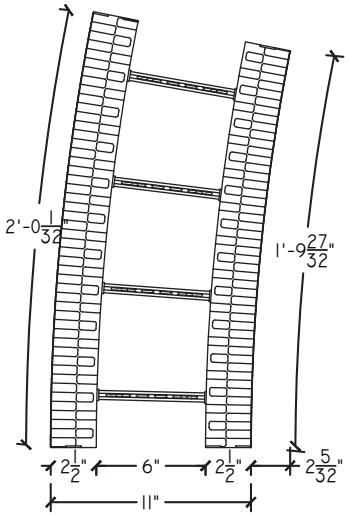

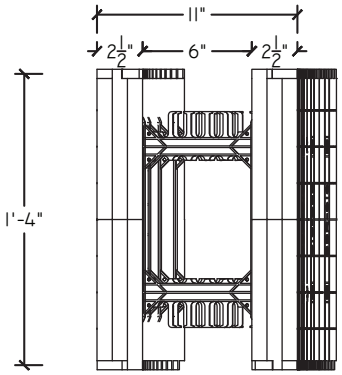

1/XX END VIEW
SCALE: NTS

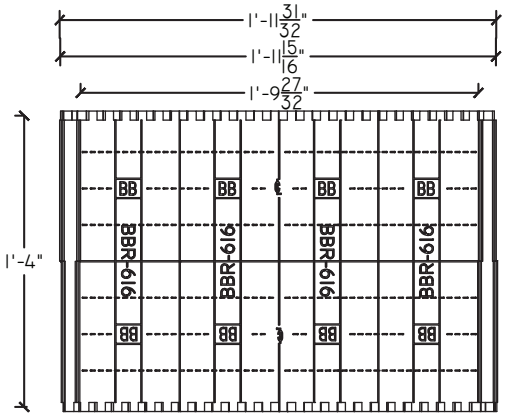

1/XX SIDE VIEW
SCALE: NTS

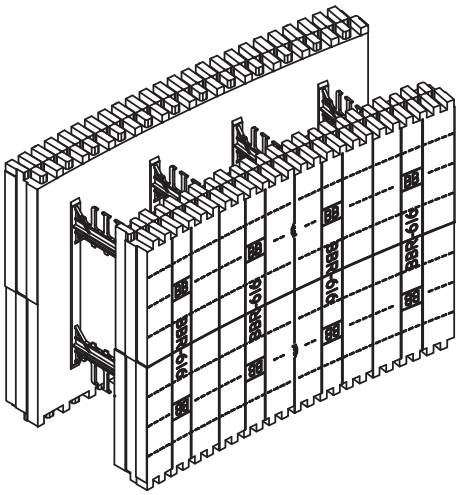

1/XX PERSPECTIVE VIEW
SCALE: NTS

16FT BUILDRADIUS FORM SPECIFICATIONS		
	IMPERIAL	METRIC
BLOCK ANGLE	11.25°	11.25°
OUTSIDE PANEL AREA	2.67FT²	.2477M²
INSIDE PANEL AREA	2.42FT²	.2251M²
OUTER PANEL ARC LENGTH	2FT 0IN	60.96M
INNER PANEL ARC LENGTH	1-FT 9-13/16-IN	55CM
OUTER RADIUS	10-FT 2-1/4-IN	310.47CM
INNER RADIUS	9-FT 3-1/4-IN	282.54CM
STRAIGHT SECTION LENGTHS	0-IN	0-CM
CONCRETE VOLUME	0.04715 YD³	0.036048 M³

BuildBlock® BUILDING SYSTEMS

9705 N. BROADWAY EXTENSION, SUITE 200, OKLAHOMA CITY, OK 73114
OFFICE: 405-840-3386 | TOLL FREE: 866-222-2575 | FAX: 831-597-0792
BUILDBLOCK.COM

BUILDRADIUS 16-FOOT ARC RADIUS PRODUCT DETAIL

DATE/REV	8/2016	SCALE	NTS	DETAIL SHEET
NOTES				65E

1/XX TOP VIEW
SCALE: NTS

NOTES:
BUILDRADIUS FORMS ARE SIZED BY THE LENGTH OF THE OUTER PANEL AT A 90° ARC. THE RADIUS AND DIAMETER OF THE FORMS ARE GIVEN IN THE ACCOMPANYING CHART.
TO CREATE A RUNNING BOND WHEN INTEGRATING WITH A STRAIGHT BLOCK WALL, CUT THE FORM IN HALF, VERTICALLY AT THE CENTERLINE ( ) USING ONE HALF OF THE BLOCK AT EACH END ON EVERY OTHER COURSE.
BLOCKS STACK @ 1'-4" INCREMENTS

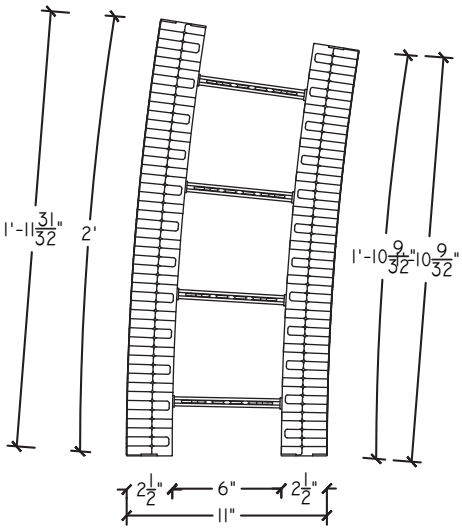

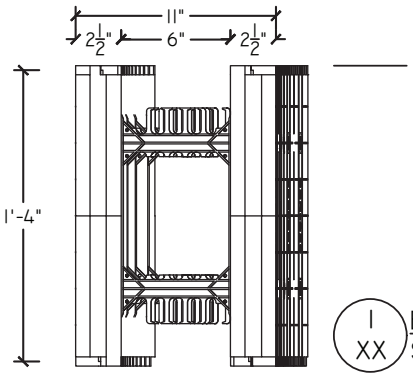

1/XX END VIEW
SCALE: NTS

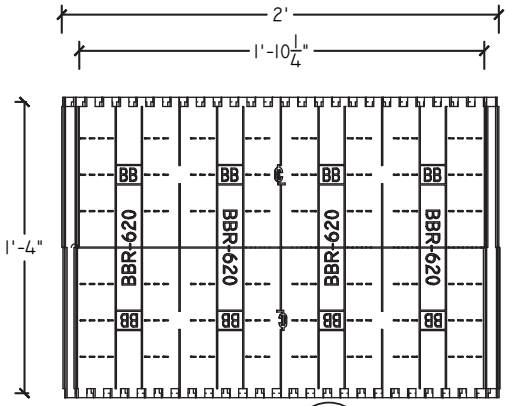

1/XX SIDE VIEW
SCALE: NTS

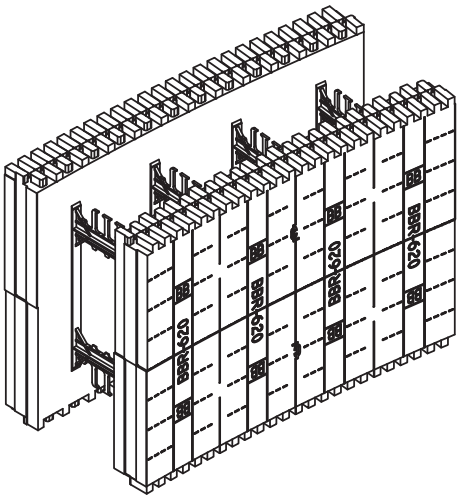

1/XX PERSPECTIVE VIEW
SCALE: NTS

20FT BUILDRADIUS FORM SPECIFICATIONS		
	IMPERIAL	METRIC
BLOCK ANGLE	9°	9°
OUTSIDE PANEL AREA	2.67FT²	.2477M²
INSIDE PANEL AREA	2.47FT²	.229M²
OUTER PANEL ARC LENGTH	2-FT 0-IN	60.96M
INNER PANEL ARC LENGTH	1-FT 10-1/4-IN	57CM
OUTER RADIUS	12-FT 8-13/16-IN	388.08CM
INNER RADIUS	9-FT 3-1/4-IN	360.27CM
STRAIGHT SECTION LENGTHS	0-IN	0-CM
CONCRETE VOLUME	0.048606 YD³	0.036397 M³

BuildBlock® BUILDING SYSTEMS

9705 N. BROADWAY EXTENSION, SUITE 200, OKLAHOMA CITY, OK 73114
OFFICE: 405-840-3386 | TOLL FREE: 866-222-2575 | FAX: 831-597-0792
BUILDBLOCK.COM

BUILDRADIUS 20-FOOT ARC RADIUS PRODUCT DETAIL

DATE/REV	8/2016	SCALE	NTS	DETAIL SHEET
NOTES				65F

A:
BUILDRADIUS INSTALLED PERPENDICULAR TO STRAIGHT WALL. USING 90° CORNER FORM.

THIS JOINT MUST BE STRAPPED AT THE COMMON SEAM BETWEEN THE BUILDRADIUS FORM AND THE CORNER. STRAPPING SHOULD ALSO WRAP THE CORNER, AND EXTEND ACROSS A MINIMUM OF TWO FULL WEBS, BOTH DIRECTIONS. BRACING SHOULD BE PLACED ON BOTH SIDES OF THE CORNER.
ALTERNATING THE CORNER FORM TO PROVIDE APPROPRIATE RUNNING BOND WILL REQUIRE CUTTING THE FORMS LONG LEGS OFF ALTERNATING AS THE FORMS ARE STACKED.

HALF BLOCKS MUST BE INSERTED TO PROVIDE THE RUNNING BOND FOR THE RADIUS FORMS.

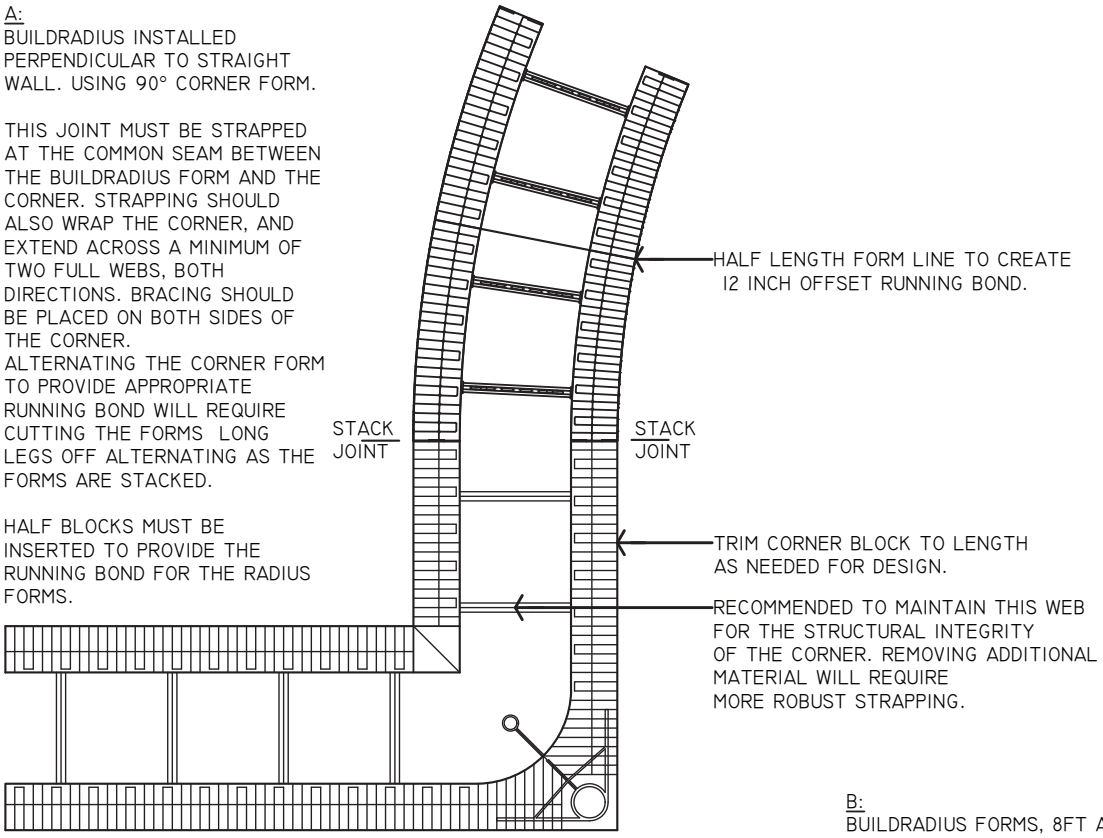

A
65G

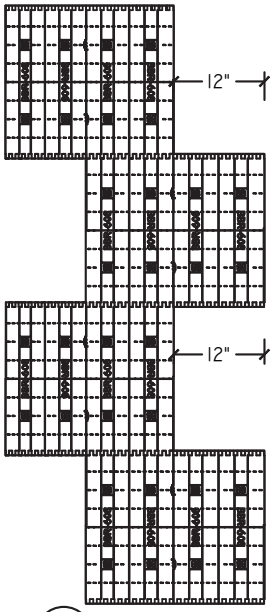

B
65G

B:
BUILDRADIUS FORMS, 8FT ARC AND LARGER, MUST BE INSTALLED SO THAT THERE IS A HALF LENGTH BLOCK EVERY OTHER COURSE. IT IS THE HALF LENGTH BLOCK THAT PROVIDES THE NECESSARY OFFSET TO MAINTAIN THE RUNNING BOND AROUND THE CURVE. THE RUNNING BOND IN THE RADIUS FORM ELIMINATES STRAPPING WHERE NOT ON A COMMON SEAM, AND PROVIDES STRONGER FORMWORK FOR POURING.

C:
BUILDRADIUS MAY BE FIELD CUT AND CONNECTED INTO A STRAIGHT WALL. REMOVE 6 INCHES FROM CONVEX PANEL OF BUILDRADIUS FORM. FIELD CUT STRAIGHT FORM TO MATCH ANGLE AND LOCATION OF BUILDRADIUS FORM.

EVEN AND ODD COURSES WILL HAVE ALTERNATING DIMENSIONS DUE TO RUNNING BOND OF BOTH STRAIGHT AND RADIUS WALL. STRAIGHT FORMS MUST BE TRIMMED TO MAINTAIN THE REQUIRED 12 INCH OVERLAP. RADIUS FORMS MUST USE HALF FORMS, TRIMMED TO FIT THE INTERSECTION, EVERY OTHER COURSE, TO MAINTAIN THE REQUIRED 12 INCH OVERLAP AS WELL.

STRAP AND BRACE COMMON SEAMS AS REQUIRED. GLUE JOINTS USING SPRAY FOAM ADHESIVE.

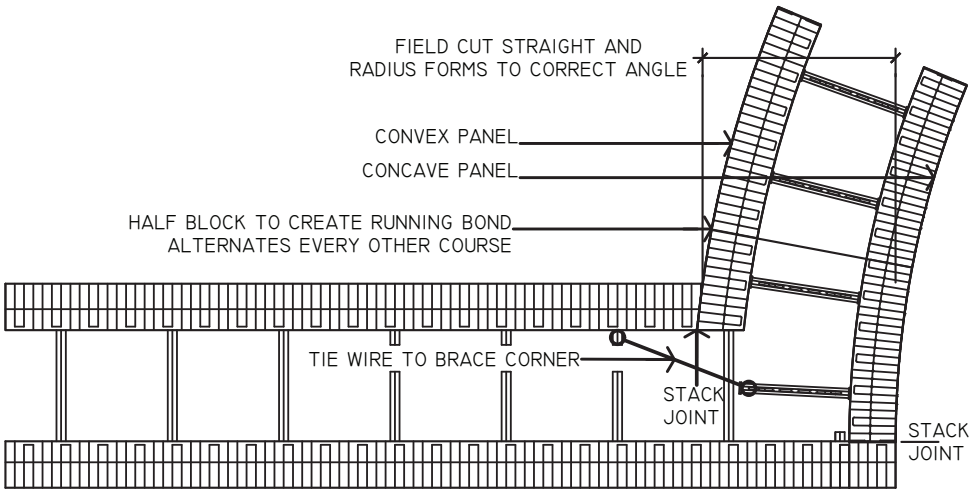

C
65G

BB-600 STRAIGHT FORM

BuildBlock® BUILDING SYSTEMS

9705 N. BROADWAY EXTENSION, SUITE 200, OKLAHOMA CITY, OK 73114
OFFICE: 405-840-3386 | TOLL FREE: 866-222-2575 | FAX: 831-597-0792
BUILDBLOCK.COM

BUILDRADIUS WALL INTERSECTIONS

DATE/REV	8/2016	SCALE	NTS	DETAIL SHEET
NOTES				65G

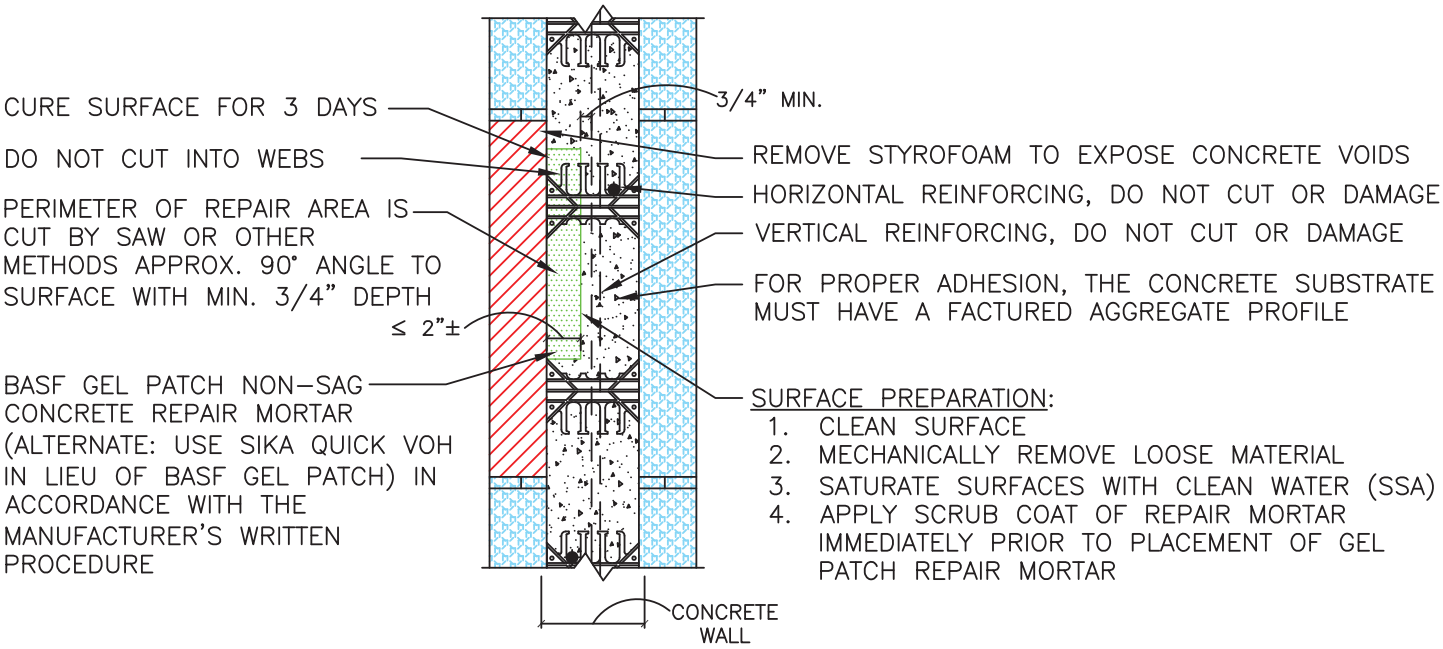

1 / 66a 2± INCH DEEP CONCRETE VOID REPAIR

SCALE: 1 1/2" = 1'-0"

ROBERT F. OLECK LICENSE No. 52514 STATE OF FLORIDA PROFESSIONAL ENGINEER
2-13-17

BuildBlock® BUILDING SYSTEMS

9705 N. BROADWAY EXTENSION, SUITE 200, OKLAHOMA CITY, OK 73114
OFFICE: 405-840-3386 | TOLL FREE: 866-222-2575 | FAX: 831-597-0792
BUILDBLOCK.COM

2± INCH DEEP CONCRETE VOID REPAIR

DATE/REV	2-13-17	SCALE	NTS	DETAIL SHEET
NOTES				66A

CONSTRUCTION SHALL BE IN ACCORDANCE WITH ALL APPLICABLE LOCAL AND NATIONAL CODES. ALL DRAWINGS ARE SUBJECT TO CHANGE WITHOUT NOTICE.

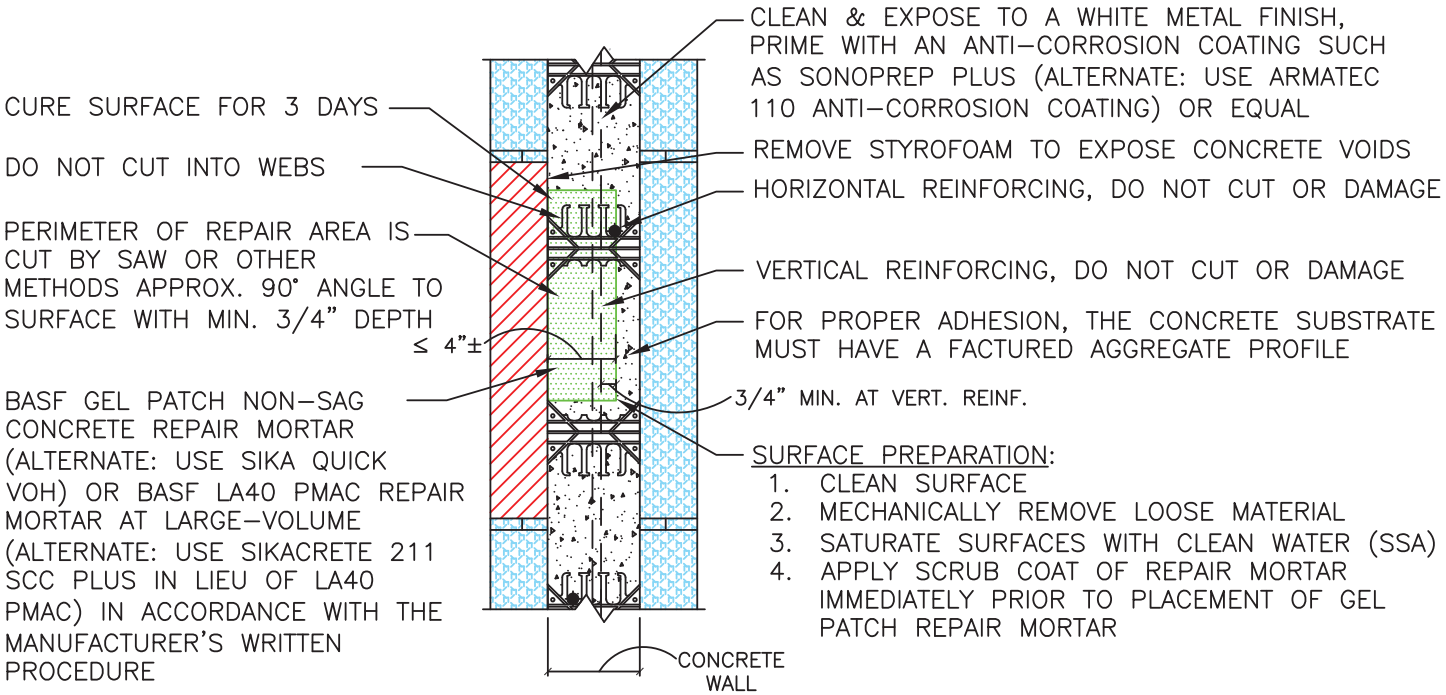

1 / 66b 4± INCH DEEP CONCRETE VOID REPAIR

SCALE: 1 1/2" = 1'–0"

ROBERT F. OLECK LICENSE No. 52514 STATE OF FLORIDA PROFESSIONAL ENGINEER

BuildBlock® BUILDING SYSTEMS

9705 N. BROADWAY EXTENSION, SUITE 200, OKLAHOMA CITY, OK 73114
OFFICE: 405-840-3386 | TOLL FREE: 866-222-2575 | FAX: 831-597-0792
BUILDBLOCK.COM

4± INCH DEEP CONCRETE VOID REPAIR

DATE/REV	2-13-17	SCALE	NTS	DETAIL SHEET
NOTES				66B

CONSTRUCTION SHALL BE IN ACCORDANCE WITH ALL APPLICABLE LOCAL AND NATIONAL CODES. ALL DRAWINGS ARE SUBJECT TO CHANGE WITHOUT NOTICE.

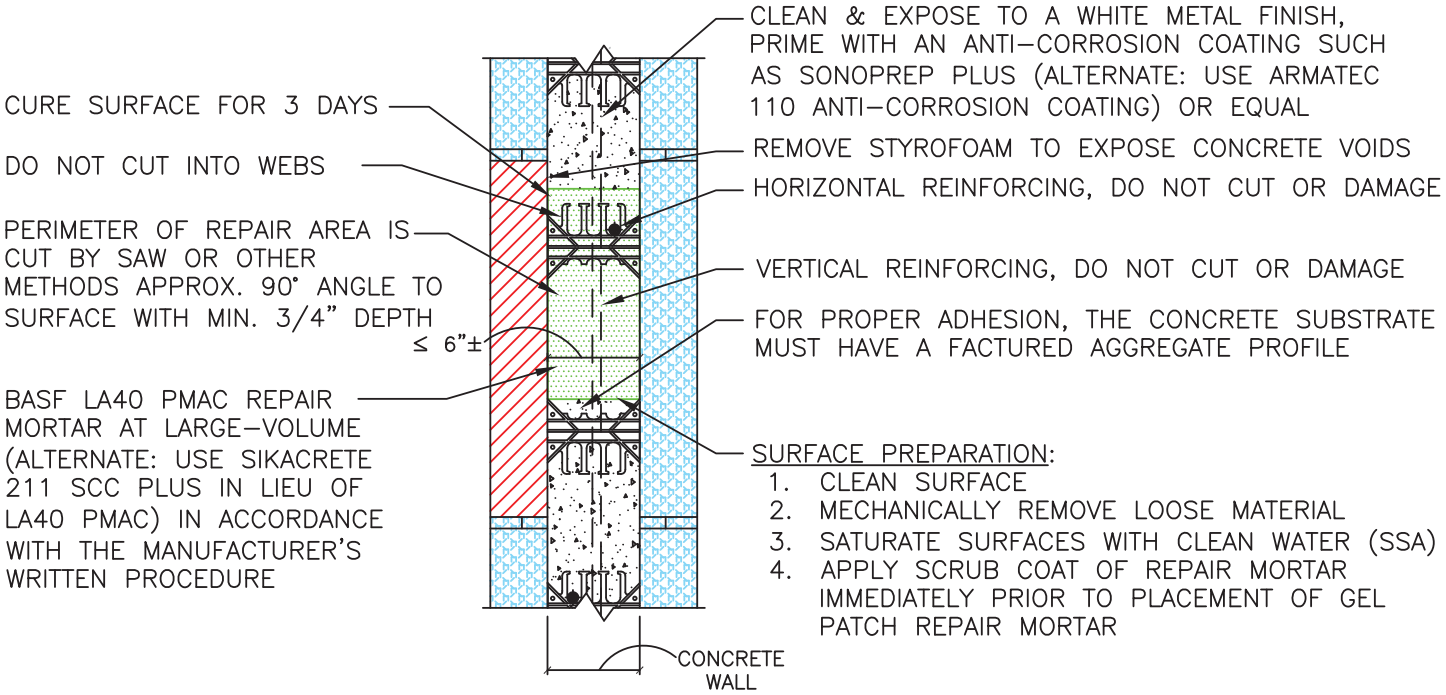

1 / 66c

6± INCH DEEP CONCRETE VOID REPAIR

SCALE: 1 1/2" = 1'–0"

ROBERT F. OLECK
LICENSE No. 52514
STATE OF FLORIDA
PROFESSIONAL ENGINEER
2/13/17

BuildBlock® BUILDING SYSTEMS

9705 N. BROADWAY EXTENSION, SUITE 200, OKLAHOMA CITY, OK 73114
OFFICE: 405-840-3386 | TOLL FREE: 866-222-2575 | FAX: 831-597-0792
BUILDBLOCK.COM

6± INCH DEEP CONCRETE VOID REPAIR

DATE/REV	2-13-17	SCALE	NTS	DETAIL SHEET
NOTES				66C

CONSTRUCTION SHALL BE IN ACCORDANCE WITH ALL APPLICABLE LOCAL AND NATIONAL CODES. ALL DRAWINGS ARE SUBJECT TO CHANGE WITHOUT NOTICE.