CITY OF CLEVELAND HEIGHTS

City of Cleveland Heights
Kahlil Seren, Mayor
Department of Housing Preservation
40 Severance Circle
Cleveland Heights OH. 44118

LEAD CLEARANCE EXAMINATION REPORT

CLEVELAND LEAD SOLUTIONS CO.

LEAD-SAFE HOMES · CLEVELAND, OHIO & SURROUNDING AREAS

PERFORMED AT:

[redacted]
ADDRESS
DATE OF CONSTRUCTION
PARCEL NUMBER

PROPERTY OWNER INFORMATION:

[redacted]

PREPARED BY:

MATTHEW JACOBS
[redacted]
30700 Bainbridge Road
Solon, OH. 44139
inspect@clevelandleadsolutions.com

Signature: Matthew Jacobs

DATE OF ASSESSMENT: 11/10/2023
DATE OF REPORT: 02/28/2024

Rev. 7/2022

CONTRACTOR INFORMATION:
Cleveland Lead Solutions Co., ODH Certification #: [redacted]
Matthew Jacobs
30700 Bainbridge Road
Solon OH. 44139

VISUAL INSPECTION OF THE EXTERIOR:

On November 10, 2023, a visual inspection of the exterior found no dust, debris, or paint chips on the ground or on horizontal surfaces in the work areas and adjacent to the work areas. All painted surfaces not previously tested to be lead-free were in good condition at the time of this clearance examination.

VISUAL INSPECTION OF THE INTERIOR:

On November 10, 2023, a visual inspection was conducted in the Living Room, Bedroom 1, Bedroom 2 and Bedroom 3. No visible dust, debris, or paint chips were observed on floors or any horizontal surfaces in the work areas and adjacent to the work areas. All painted surfaces not previously tested to be lead-free were in good condition at the time of this clearance examination.

DUST SAMPLE ANALYSIS:
Dust wipe samples were collected following documented protocol and sampling methodologies found in the U.S. Department of Housing and Urban Development (HUD) ***"Guidelines for the Evaluation and Control of Lead-Based Paint Hazards in Housing." Second Edition 2012.*** The field collection of settled dust samples using wipe sampling methods is used to determine the presence of lead dust hazards on floors, windowsills, and window troughs in a residential structure. In Ohio, a lead dust hazard is present if the laboratory results show levels of lead that are equal to or are greater than 10 micrograms per square foot (µg/ft²) on a floor, 100 µg/ft² on a windowsill, and 100 µg/ft² on a window trough.

On November 10, 2023, a total of 12 dust wipe samples were collected and analyzed. One field blank sample anonymously marked was included and analyzed as a quality control check. Samples were analyzed by:

Environmental Hazards, ODH Certification #: [redacted]
7469 Whitepine Rd.
Richmond, VA. 23237
804-275-4788

FINDINGS (once everything passes):
Based on the results of a visual inspection and laboratory analysis of dust wipe samples, no lead hazards were identified. **This property has passed clearance.** Future activities in and around the property may create new lead hazards or cause lead hazards corrected with interim control methods to reappear.

It is recommended that regular ongoing monitoring and visual inspection of the property be conducted to identify any areas of new deterioration. This may be done by the homeowner or a certified risk assessor or hazard investigator. Any area of new deterioration, rot, and substrate or component failure should be corrected with an ongoing property maintenance program.

DISCLOSURE STATEMENTS

Section 5302.30 of the Ohio Revised Code requires transferors of residential real property by sale, land installment contract, lease with option to purchase, exchange, or lease for a term of ninety-nine years and

renewable forever, to complete and provide a copy to the prospective transferee of the applicable property disclosure forms, disclosing known hazardous conditions of the property, including lead-based paint hazards.

Federal law (24 CFR part 35 and 40 CFR part 745) requires the sellers or lessors of residential property constructed prior to 1978, except housing for the elderly or persons with disabilities (unless any child who is less than six years old resides or is expected to reside in such housing) or any zero-bedroom dwelling, to disclose and provide a copy of this report to new purchasers or lessees (tenants) before they become obligated under a lease or sales contract.

Property owners and sellers are also required to distribute an educational pamphlet approved by the United States Environmental Protection Agency and include standard warning language in leases or sales contracts to ensure parents have the information they need to protect children from lead-based paint hazards.

There may be unidentified lead paint or lead paint hazards in this residence, due to the limited nature of a lead clearance report following limited paint film stabilization work. Un-sampled surface dust may be a lead hazard. Sampled or un-sampled paint, soil, or dust with less than regulated amounts or concentrations of lead may create lead hazards if chewed, swallowed, inhaled, or if the paint is turned into dust or chips by abrasion, scraping, sanding, or other disturbance.

Clearance Investigator: Matthew Jacobs **Date: 02/28/2024**

Contact me at inspect@clevelandleadsolutions.com with any questions regarding this report.

CITY OF CLEVELAND
Mayor Justin M. Bibb

LEAD SAFE CERTIFICATION APPLICATION

City of Cleveland
Department of Building and Housing
Division of Record Administration
601 Lakeside Avenue E., Rm. 517
Cleveland, Ohio 44114

Date: 02 (M M) 28 (D D) 2024 (Y Y Y Y)

Submitted By:

Name: MATTHEW JACOBS

Address: 30700 BAINBRIDGE ROAD SOLON OHIO 44139

Email: inspect@clevelandleadsolutions.com Phone: _____

Relation to Property: ☒ Inspector/Risk Assessor ☐ Owner ☐ Property Manager ☐ Other _____

Property Location:

Street Address: [redacted]

City, State, Zip Code: CLEVELAND HEIGHTS OH. 44118

Permanent Parcel Number: [redacted]

Is Your Property a Rental? YES

Property Profile:

Year Built: 1920

Total Number of Units: 1

Number of Units Inspected/Tested: 1

Rental Registration #: RR ____-_____

Clearance/Risk Assessment Performed On:

Date: 11 (M M) 10 (D D) 2023 (Y Y Y Y) Time: 2:30 ☐ AM ☒ PM

Owner's Information:

Owner's Name: [redacted]

Owner's Address: [redacted]

(Street, City, State, Zip Code)

Property Prepared/Cleaned/Remediated By:

ODH License #/RRP Certification #: _____

Name: _____

Contractor Address: _____

City, State, Zip Code: _____ Phone: _____

Clearance/Risk Assessment Performed By:

Name of Investigator: MATTHEW JACOBS

Ohio Department of Health (ODH) Certification#: [redacted] Job Title: CLEARANCE TECH

Company/Firm: CLEVELAND LEAD SOLUTIONS CO. EPA/ODH Lead Firm Certification # _____

Street Address: 30700 BAINBRIDGE ROAD

City, State, Zip Code: SOLON, OH. 44139 Phone: _____

LEAD SAFE CERTIFICATION APPLICATION

Lab Information:

Lab Name: EHS LABS

Lab Accreditation Number: C10028

Clearance Examination Findings:

- [x] Passed Clearance Examination
- [ ] Failed Clearance Examination

Risk Assessment Inspection Findings:

- [ ] Active Lead Hazards Identified
- [ ] No Active Lead Hazards Identified

XRF Paint Inspection Findings:

- [ ] Lead Paint Present
- [ ] Lead Paint Not Present

Paint Inspection Performed On: _____

Please attach additional ODH credential and Lab information on a separate sheet if examinations/inspections performed by multiple vendors.

I hereby certify that the information provided on this cover sheet is an accurate representation of the information contained in the attached Lead Clearance/Lead Risk Assessment Report and that the report was prepared pursuant to the guidelines in Ohio Administrative Code Section 3701-32.

Signature: Matthew Jacobs Date: 02/28/2024

Printed Name: MATTHEW JACOBS

Submit this form and the associated inspection report via email to: LeadCertCLE@city.cleveland.oh.us or via postal mail to: City of Cleveland Department of Building and Housing Division of Records Administration; 601 Lakeside Avenue E., Rm 517; Cleveland, Ohio 44114. Must be postmarked within 30 days of the date of inspection.

Environmental Hazards Services, L.L.C.
7469 Whitepine Rd
Richmond, VA 23237
Telephone: 800.347.4010

Lead Dust Wipe Analysis Report

Report Number: [redacted]

Client: Cleveland Lead Compliance LLC
30700 Bainbridge Road #J
Solon, OH 44139

Received Date: 11/20/2023
Analyzed Date: 11/27/2023
Reported Date: 11/28/2023

Project/Test Address: [redacted]
Collection Date: 11/10/2023

Client Number: [redacted]

Fax Number:

Laboratory Results

Lab Sample Number	Client Sample Number	Collection Location	Surface	Total Pb (ug)	Wipe Area (ft²)	Concentration (ug/ft²)	Narrative ID
23-11-02841-001	1	LR	FL	<5.00	1.00	<5.00	
23-11-02841-002	2	LR	SL	<5.00	0.111	<45.1	
23-11-02841-003	3	LR	WW	<5.00	0.111	<45.1	
23-11-02841-004	4	BR 1	FL	<5.00	1.00	<5.00	
23-11-02841-005	5	BR 1	SL	<5.00	0.111	<45.1	
23-11-02841-006	6	BR 1	WW	<5.00	0.111	<45.1	
23-11-02841-007	7	BR 2	FL	<5.00	1.00	<5.00	
23-11-02841-008	8	BR 2	SL	<5.00	0.111	<45.1	
23-11-02841-009	9	BR 2	WW	<5.00	0.111	<45.1	
23-11-02841-010	10	BR 3	FL	<5.00	1.00	<5.00	
23-11-02841-011	11	BR 3	SL	<5.00	0.111	<45.1	
23-11-02841-012	12	BR 3	WW	<5.00	0.111	<45.1	
23-11-02841-013	13	BLANK		<5.00	--	---	

Environmental Hazards Services, L.L.C

Client Number: [redacted]
Project/Test Address:

Report Number: [redacted]

Lab Sample Number	Client Sample Number	Collection Location	Surface	Total Pb (ug)	Wipe Area (ft^2)	Concentration (ug/ft^2)	Narrative ID

Method: ASTM E-1979-17/EPA SW846 7000B

Accreditation #: OH 10028

Reviewed By Authorized Signatory: Melissa Kanode

Melissa Kanode

QA/QC Clerk

The Reporting Limit (RL) is 5.00 ug Total Pb. Dust wipe area and results are calculated based on area measurements determined by the client. All internal quality control requirements associated with this batch were met, unless otherwise noted.

The condition of the samples analyzed was acceptable upon receipt per laboratory protocol unless otherwise noted on this report. Results represent the analysis of samples submitted by the client. Sample location, description, area, etc., was provided by the client. Results reported above in ug/ft2 are calculated based on area supplied by the client. If the report does not contain the result for a field blank, it is due to the fact that the client did not include a field blank with their samples. These sample results do not reflect blank correction. This report shall not be reproduced except in full, without the written consent of Environmental Hazards Services, L.L.C.

ELLAP Accrediitation through AIHA LAP, LLC (100420), NY ELAP #11714.

Legend	ug = microgram	ug/ft^2 = micrograms per square foot	Pb = lead
	mL = milliliter	ft^2 = square foot	

PRS DMV

ENVIRONMENTAL HAZARDS SERVICES, LLC

Lead Chain of Custody Form

Page ____ of ____

Company Name	Cleveland Lead Compliance LLC	Account #	202082
Company Address	30700 Bainbridge Road	City/State/Zip	Solon OH. 44139
Phone	[redacted]	Email	[redacted]
Project Name / Testing Address	[redacted]		
PO Number		Collected By	

Turn-Around Time: (●) 5 Day ( ) 3 Day ( ) 2 Day ( ) 1 Day ( ) Same Day / Weekend - Must Call Ahead

Do Submitted Dust Wipe Samples Meet ASTM E1792 Requirements? ☑ Yes ☐ No

NEW YORK CITY Pb DUST WIPE PROJECTS: Please take floor dust wipe samples using a 2 ft² wipe area.

SAMPLE TYPES				SAMPLE LOCATION ABBREVIATIONS										SURFACE TYPE FOR DUST WIPES			
Dust Wipe	DW	Air	A	Family Room	FR	Front	F	1st FL	1	Bath	BA	Bedroom	BR	Floor	FL	Window Well	WW
Paint Chip	PC	Soil	S	Living Room	LR	Rear	R	2nd FL	2	Dining	DR	Basement	O	Carpet	CP	Window Sill	SL
Composite Soil	CS	Composite Wipe	CW	Den	DN	Left	LT	Right	RT	Kitchen	KT						

	LAB NUMBER	Client Sample ID	Collection Date	Sample Type	Collection Location [LR, KT, BA,]	Surface Type	Area: Length X Width (In Inches) [Provide paint chip area only if results are needed in mg/cm²]	Paint Chip: mg/cm²	Paint Chip: % by weight	Air: Total Time [minutes]	Air: Flow Rate [L/min]	Air: Total Volume [Liters]
1				W	LR	FL	12 X 12					
2				W	LR	SL	2 X 8					
3			11/10	W	LR	WW	2 X 8					
4				W	BR 1	FL	12 X 12					
5				W	BR 1	SL	2 X 8					
6				W	BR 1	WW	2 X 8					
7				W	BR 2	FL	12 X 12					
8				W	BR 2	SL	2 X 8					
9				W	BR 2	WW	2 X 8					
10				W	BR 3	FL	12 X 12					
11				W	BR 3	SL	2 X 8					
12				W	BR 3	WW	2 X 8					
AL 13				W	BLANK		X					
14							X					

Released By: M. JACOBS Date: 11/10/23 Time:

Signature: [redacted]

LAB USE ONLY – BELOW THIS LINE

Received By: Amanda Lowery

Signature: A Lowery

Date: 11 / 20 / 23 Time: 12 : 47 ☐ AM ☑ PM

☐ Portal Contact Added

23-11-02841

Due Date: 11/29/2023 (Wednesday) AE

7469 WHITEPINE RD, RICHMOND, VA 23237 (800)-347-4010

RESULTS VIA CLIENT PORTAL AVAILABLE @ www.leadlab.com

2841

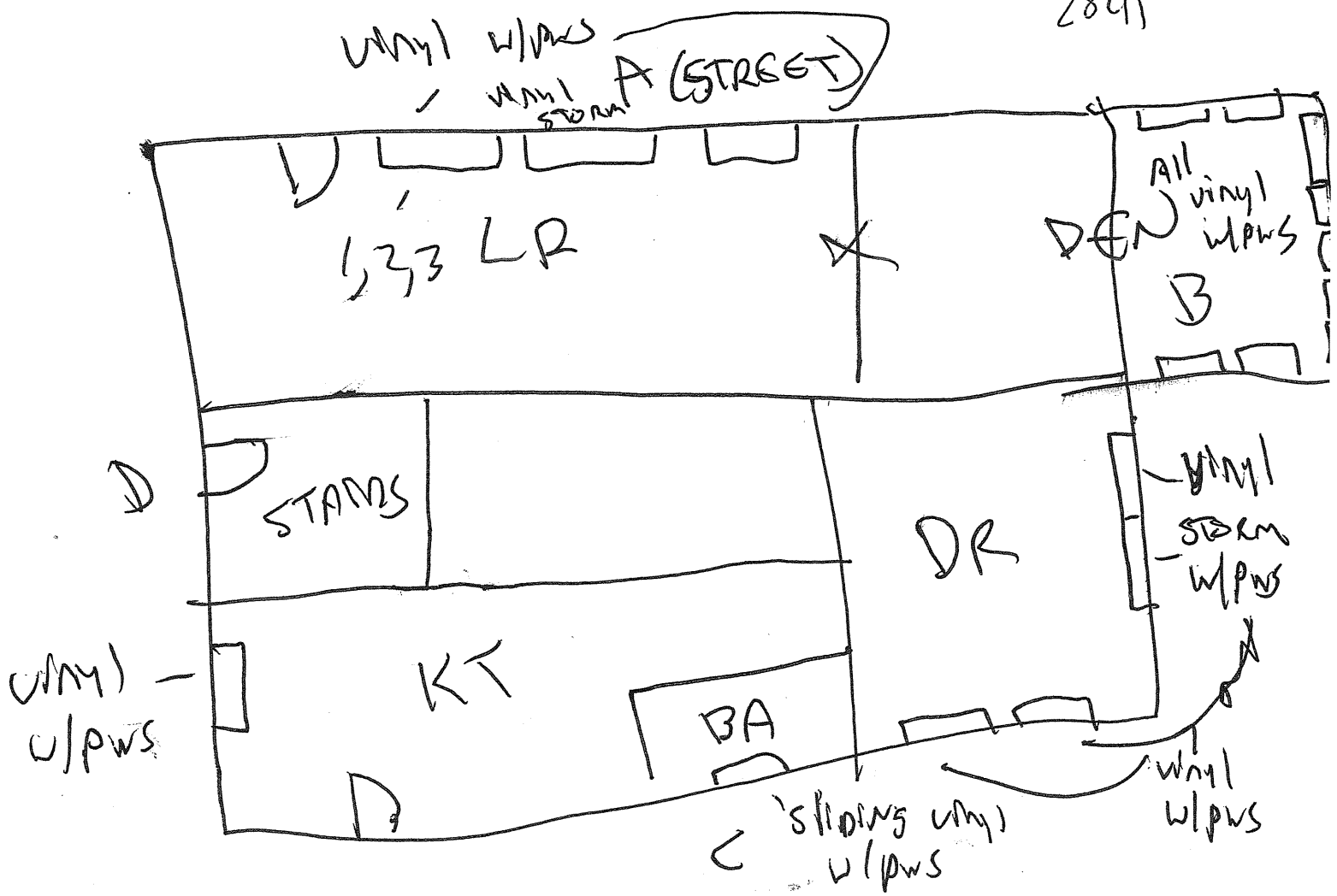
vinyl w/pws
vinyl storm
A (STREET)
1,2,3 LR
DEN
All vinyl w/pws
B
STAIRS
DR
vinyl storm w/pws
vinyl w/pws
KT
BA
sliding vinyl w/pws
vinyl w/pws
C


vinyl w/pws
A (STREET)
2ND FL
vinyl w/pws
vinyl w/pws
BR2
7,8,9
BR
B
3RD FL
A
vinyl w/pws
10,11
12
STAIRS
4,5,6
BR1
STAIRS
vinyl w/pws
BA
BALCONY
C
vinyl w/pws
C

[redacted]









MyPLACE

Cuyahoga County, Ohio - Property Summary Report

[redacted]

Owner [redacted]
Address

Land Use
Description
Neighborhood Code

SKETCH

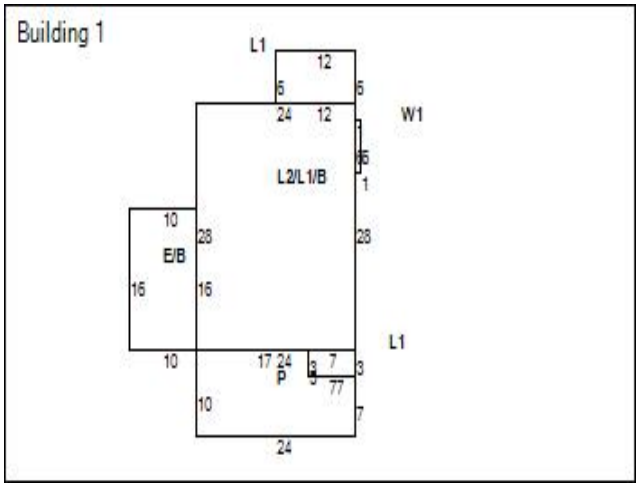

MAP VIEW



BUILDING INFORMATION

Building Record Number	1	Occupancy	1-FAMILY	Story Height	2
Style	COLONIAL	Year Built	1920	Exterior Walls	FRAME
Condition	AVERAGE	Construction Quality	C+ / AVERAGE+	Roof Type	GABLE
Roof Material	ASPH-SHINGLE	Heat Type	FORCED-AIR	Air Conditioning	NONE
Attic Type	UNFINISHED	Basement Type	BASEMENT	Basement Square Feet	832
Basement Finished	N/A	Rooms	6	Bedrooms	3
Bathrooms (Full/Half)	1/1	Garage Type	DETACHED	Garage Capacity	2
Year Garage Built	1920	Garage Size	400	Living Area Basement	
Living Area 1	771	Living Area 2	672	Living Area Upper	
Living Area Total	1,443	Floor Location		Party Wall	

LAND

Code	Frontage	Depth	Acreage	Sq Ft
PRM	50	125	0.14	6,250

VALUATION

2023 Values	Taxable Market Value	Exempt Market Value	Abated Market Value	Assessed Taxable Value
Land Value	$38,300	$0	$0	$13,410
Building Value	$110,400	$0	$0	$38,640
Total Value	$148,700	$0	$0	$52,050
Land Use	5100			SINGLE FAMILY DWELLING

PERMITS

Tax Year	Reason	Tax Change	Exempt Change	Percent Complete	Reinspect	Notes

IMPROVEMENTS

Type	Description	Size	Height Depth

[redacted]

Taxes

2023 Taxes	Charges	Payments	Balance Due
Tax Balance Summary	**$6,057.86**	**$3,028.93**	**$3,028.93**

Information included on this report is believed to be accurate, but is not guaranteed. Cuyahoga County is not liable for errors or omissions.

Cleveland Lead Solutions Co.
30700 BAINBRIDGE ROAD
SOLON OH. 44139
inspect@clevelandleadsolutions.com

[redacted]

February 27, 2024

City of Cleveland Heights
Department of Housing Preservation
40 Severance Circle
Cleveland Heights, OH. 44118

RE:

To Whom It May Concern:

Disclosure Requirements

Ohio law (section 5301.30 of the Revised Code) requires every person who intends to transfer any residential real property by sale, land installment contract, lease with option to purchase, exchange, or lease for a term of ninety-nine years and renewable forever, to complete and provide a copy to the prospective transferee of the applicable property disclosure forms, disclosing known hazardous conditions of the property, including lead-based paint hazards.

Federal law (24 CFR part 35 and 40 CFR part 745) requires sellers and lessors of residential units constructed prior to 1978, except housing for the elderly or persons with disabilities (unless any child who is less than six years of age resides or is expected to reside in such housing) or any zero-bedroom dwelling to disclose and provide a copy of this report to new purchasers or lessees before they become obligated under a lease or sales contract. Property owners and sellers are also required to distribute an educational pamphlet approved by the United States Environmental Protection Agency and include standard warning language in leases or sales contracts to ensure that parents have the information they need to protect children from lead-based paint hazards.

The subject property is located at [redacted]**CLEVELAND HEIGHTS OH. 44118 on NOVEMBER 10, 2023,** the above property was inspected by MATT JACOBS [redacted], Ohio Licensed Clearance Examiner under contract with the owner.

The clearance exam was performed in compliance with State of Ohio protocols and standard industry practices.
All samples were analyzed by the State of Ohio approved, EHS Labs, Richmond, VA, using EPA approved methods and advanced technology.

Understanding Your Report

1. The Summary Results section lists all of the areas that failed the clearance examination. The entire area represented by the sample needs to be re-cleaned and then re-tested to see if the cleaning removed the contaminated dust. Deteriorated painted surfaces should be repaired using interim controls or abatement techniques. For written information on how to address lead hazards, call the National Lead Information Center Clearinghouse at 1-800-424-Lead (1- 800-424-5323). You may consider hiring a risk assessor to evaluate lead hazards in your home and recommend a lead hazard control plan. Risk assessors can be located through the Lead listing at 1-888-Leadlist (1-888-532-3547). 2. The laboratory result forms attached to the report list all of the areas sampled inside and outside the dwelling and the laboratory analysis results for each sample. 3. The results dust wipe samples will be presented in micrograms per square foot (∝g/ft2); soil samples will be presented in micrograms per gram (∝g/g). 4. Areas that failed the clearance examination showed lead levels in dust at or above Federal or state standards. **The standards that were used for during this clearance examination are: HUD Standards for Lead in Dust Floors: 10 µg/ft2 Interior window sill (stool): 100 µg/ft2 Window trough: 100 µg/ft2.**

Attached is clearance exam of the property recently subjected to exams under the Cleveland Lead Safe ordinance.

The overall visual building conditions on is good. No chipping paint was observed in the walk around as the exterior the property. No bare soil was observed. The unit was completely painted no observable peeling on the interior of the unit.

The Assessor recommends retesting in two years in compliance with Cleveland City Codes.

The unit passed the clearance exam showing no lead hazards identified.
Should you have any questions, please feel free to contact my office.

Regards,

Matthew Jacobs

Ohio Department of Health

Clearance Examination Report

As Required by Ohio Administrative Code 3701-32

Ohio law(section 5302.30 of the Revised Code) requires every person who intends to transfer any residential real property by sale, land installment contract, lease with option to purchase, exchange, or lease for a term of 99 years and renewable forever, to complete and provide a copy to the prospective transferee of the applicable property disclosure forms, disclosing known hazardous conditions of the property, including lead-based paint hazards.

Federal law (24 CFR part 35 and 40 CFR part 745) requires sellers and lessors of residential units constructed prior to 1978, except housing for the elderly or persons with disabilities (unless any child who is less than 6 years of age resides or is expected to reside in such housing) or any zero-bedroom dwelling to disclose and provide a copy of this report to new purchasers or lessees before they become obligated under a lease or sales contract. Property owners and sellers are also required to distribute an educational pamphlet approved by the United States Environmental Protection Agency and include standard warning language in or attached to lease contracts or sales contracts to ensure that parents have the information they need to protect children from lead-based paint hazards.

Building owner name [redacted]		Type of building ☑ Residence ☐ Child daycare facility ☐ School ☐ Other.....	
Building Address [redacted]	City CLEVELAND HEIGHTS	State OHIO	Zip 44118
Contact person/Manager/Principal (if other than owner) [redacted]			Telephone [redacted]
Name of Lead Abatement Contractor, Lead Abatement Project Designer, Lead-Safe Renovator, or Essential Maintenance Practice Worker	License number (if applicable)		License expiration date
Employer street address	City	State	Zip
Employer			Employer telephone
Name of Risk Assessor/Inspector/Clearance Technician who performed testing MATTHEW JACOBS	License number CT8804		License expiration date 02/07/2026
Employer street address 30700 BAINBRIDGE ROAD	City SOLON	State OH	Zip 44139
Employer CLEVELAND LEAD SOLUTIONS CO.			Employer telephone

Activity conducted requiring clearance examination (Please check appropriate boxes.)

- ☐ Lead abatement
- ☐ Lead-safe renovation
- ☐ Lead Hazard Control Order
- ☐ Interim controls
- ☐ Essential maintenance practices
- ☐ Paint stabilization

Dates of Lead Hazard Control or other activity performed

Start date	Completion date

Check each clearance activity performed and attach appropriate form(s):

- ☑ Visual assessment
- ☑ Dust sample collection
- ☐ Soil sample collection
- ☐ Water sample collection

Date of Clearance Examination

- ☑ Passed Clearance examination
- ☐ Failed Clearance examination
- ☐ Repeat Clearance examination

This form is accompanied by the following required information

- ☐ Description of the lead hazard work performed
- ☑ Diagram of the floor plan with sample locations
- ☑ Laboratory results/reports
- ☐ Visual Assessment form

For a clearance examination following lead abatement on a property under a Lead Hazard Control Order issued under rule 3701-30-09 of the Administrative Code, were all lead hazards identified in the Lead Hazard Control Order sufficiently eliminated or controlled, based on comparison of the Lead Hazard Control Order with the work performed?

☐ Yes ☐ No (if no, attach an explanation) ☐ Not Applicable

Clearance Examiner signature	Date
Matthew Jacobs	02/28/2024

Ohio Department of Health

Lead Hazard Control Visual Clearance

Clearance date: 11/10/2023			Page ____ of ____
Name of Clearance Examiner: MATTHEW JACOBS	License number: [redacted]		License expiration date:
Name of property owner/manager: [redacted]	Property owner/manager phone: [redacted]		
Property address: [redacted]	City: CLEVELAND HEIGHTS	State:	Zip: 44118
Lead hazard control start date:	Date/time final cleanup completed:		
Name of Contractor, Project Designer, Lead Safe Renovator or Essential Maintenance worker:	Telephone: [redacted]		
Address: 30700 BAINBRIDGE ROAD SOLON OHIO 4	City:	State: OH	Zip:

☐ Passed Visual Clearance Examination ☐ Failed Visual Clearance Examination ☐ Repeat Visual Clearance Examination

Room Identifier	List of building components to be treated and method of control in each room	Work on each component completed?		Visible paint chips seen?		Visible settled dust seen?		Additional work required?	
EXT	NO CHIPPED PAINT OBSERVED	■ Yes	☐ No	☐ Yes	■ No	☐ Yes	■ No	☐ Yes	■ No
EXT	NO BARE SOIL PRESENT	☐ Yes	■ No	☐ Yes	■ No	☐ Yes	■ No	☐ Yes	■ No
LR	PAINTED WALLS-- GOOD COND.	■ Yes	☐ No	☐ Yes	■ No	☐ Yes	■ No	☐ Yes	■ No
BR1	PAINTED WALLS-- GOOD COND.	■ Yes	☐ No	☐ Yes	■ No	☐ Yes	■ No	☐ Yes	■ No
BR 2	PAINTED WALLS-- GOOD COND.	■ Yes	☐ No	☐ Yes	■ No	☐ Yes	■ No	☐ Yes	■ No
BR 3	PAINTED WALLS-- GOOD COND.	■ Yes	☐ No	☐ Yes	■ No	☐ Yes	■ No	☐ Yes	■ No
KT	PAINTED WALLS-- GOOD COND.	■ Yes	☐ No	☐ Yes	■ No	☐ Yes	■ No	☐ Yes	■ No
DR	PAINTED WALLS-- GOOD COND.	■ Yes	☐ No	☐ Yes	■ No	☐ Yes	■ No	☐ Yes	■ No
BA 1 B/	PAINTED WALLS-- GOOD COND.	■ Yes	☐ No	☐ Yes	■ No	☐ Yes	■ No	☐ Yes	■ No
BR	PAINTED WALLS-- GOOD COND.	■ Yes	☐ No	☐ Yes	■ No	☐ Yes	■ No	☐ Yes	■ No
DEN	PAINTED WALLS-- GOOD COND.	■ Yes	☐ No	☐ Yes	■ No	☐ Yes	■ No	☐ Yes	■ No

Exterior soil ☐ Treated ☐ Not treated (provide explanation if not treated)
If treated, is bare soil present? ☐ Yes ☐ No
Was contaminated soil removed? ☐ Yes ☐ No
Is additional soil treatment required? ☐ Yes ☐ No

Notes: NO BARE SOIL PRESENT ON PROPERTY

Clearance Examiner signature: Matthew Jacobs

HEA 7731 (8/13)

State of Ohio
Department of Health
Lead Program

Lead Clearance Technician

License Number

[redacted]



Expiration Date

02/07/2026

DOB 09/17/1991

Matthew G Jacobs

HIS LICENSE CREDENTIALS CHANGED TO LEAD RISK ASSESSOR, EXPIRES 05/13/2026

Card not valid if altered

This certification is issued pursuant of Chapter 3742 of the Revised Code and 3701-32 of the Ohio Administration Code

Ongoing Monitoring and Maintenance

Everyone knows that paint deteriorates over time. Paint also chips and scrapes off (i.e., when closing a door, moving heavy objects or sliding furniture across a painted porch deck.) Paint is also rubbed off when opening and closing windows and doors. In short, the three major sources of paint dust in an older home are deteriorated paint, impact surfaces and friction surfaces.

If there is a layer of lead-based paint under these painted surfaces, each time one of the above things happens some lead-based paint dust is generated. When this dust settles onto floors, windowsills, bare soil and/or other horizontal surfaces, it can be easily ingested by younger children. Why? Just picture a younger child as they crawl and begin to walk... their wet hands and toys are constantly touching these surfaces and then going into their mouths.

A clearance examination is only a snapshot of the property on the date that the visual assessment was completed and dust samples were collected. Further, these dust samples are only collected in four rooms plus a main entrance area. Friction and impact surfaces can potentially produce lead-based dust in the future. New bare spots in the soil under painted surfaces can collect lead dust. Finally, all paint deteriorates over time, and layers of pre-1978 lead-based paint can fall to a horizontal surface.

Both owners and occupants have important ongoing roles to help make a property lead-safe.

Owner's role in making a home lead-safe (a partial list)

1. **Inspect the property for deteriorated paint annually and at each occupant turnover**
2. Use an RRP-certified contractor and/or RRP certified workers to address this deteriorated paint (EPA's Renovation, Repair and Painting rule – see footnote). If surface prep work is not done in a lead-safe manner, the lead-paint dust problem is made worse, not better.
3. Also inspect annually for bare soil. Pay special attention to play areas and soil within three feet of foundations and painted structures. The lowest-cost way to address bare soil is to plant grass or cover with a generous layer of mulch (or equivalent).
4. Identify doors that rub and painted steps / floors. Steps can be covered with rubber treads. Doors can be shaved and rehung using RRP techniques.
5. Windows, and especially old double-hung sashes, generate a lot of dust whenever opened. Short-term, these problems can be addressed by installing jamb-liners and/or shaving the paint off the edges of the sashes and stops, using RRP techniques. Longer term, create and implement a capital improvement plan for replacement windows.
6. Also create a capital improvement plan for vinyl siding and covering or replacing porch floors.

Occupant's role in making a home lead-safe (a partial list)

1. Clean all horizonal surfaces frequently – especially in rooms, hallways, stairways and entranceways where younger children crawl and walk around.
2. Wash children's hands and toys frequently, and always before eating
3. Shoes and paws track in lead dust. Take off shoes at the door. Clean your pet's paws.
4. Wooden porches can have a LOT of lead dust. Don't let children play on porches unless the porch has been thoroughly cleaned.
5. Report deteriorate paint to owner. Don't tackle any project that disturbs paint.

FOOTNOTE: 8-hour RRP courses are often free. The essence of RRP is to keep people out of the work area, minimize & contain dust, and thoroughly clean up afterwards. RRP techniques involve the use of lots of plastic (drop cloths and dust barriers), wet sanding/scraping and using both a HEPA vacuum and wet washing afterwards.