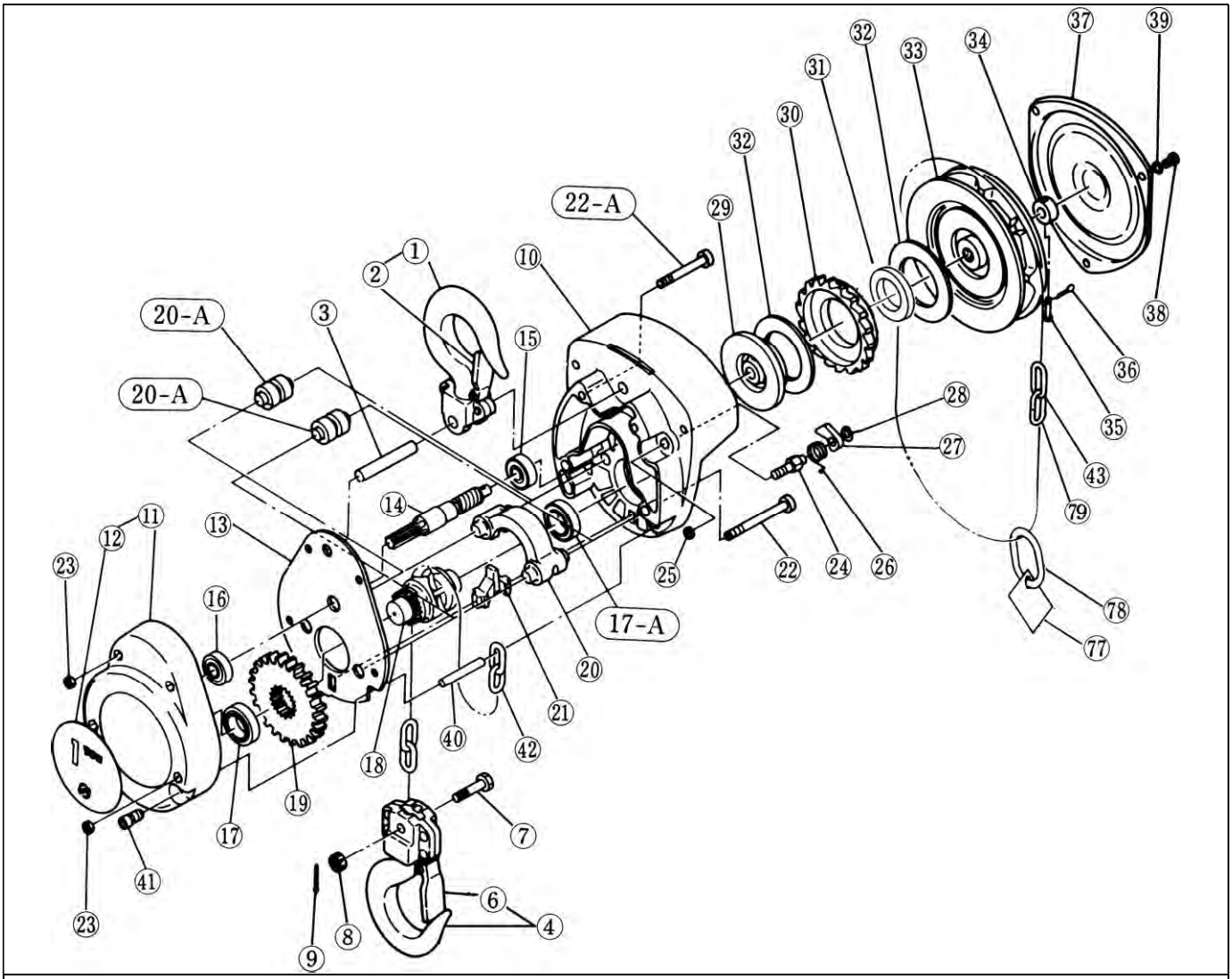

Figure 9-2 1/2 to 5 Ton Parts

9.1 1/2 to 5 Ton Parts

Fig. No.	Name		Parts / Hoist	1/2 Ton	1Ton	2 Ton	1 1/2 Ton	3 Ton	5 Ton
1	Top Hook Assembly		1	CF001005	CF001010		CF001015		
2	Latch Assembly		1	CF071005	CF071010		CF071015		
3	Top Pin		1	CF163005	CF163010		CF163015		
4	Bottom Hook Complete Set		1	M3021A005	M3021A010		M3021A015		
6	Latch Assembly		1	CF071005	CF071010		CF071015		
7	Chain Pin		1	M3041005	M3041010		M3041015		
8	Slotted Nut		1	M3049005	M2049010		M2049010		
9	Split Pin		1	9009402	9009411		9009411		
10	Body A		1	CF101005	CF101010		CF101015		
11	Body B		1	CF102005	CF102010		CF102015		
12	Name Plate - Blank	without rivets	1	CF800005B	CF800010B	CF800020B	CF800015B	CF800030B	CF800050B
		with rivets	1	CF4800005	CF4800010	CF4800020	CF4800015	CF4800030	CF4800050
13	Frame		1	CF105005	CF105010		CF105015		
14	Pinion		1	CF111005**	CF111010**		CF111015**		CF111050**
				CF4111005*	CF4111010*		CF4111015*		CF4111050*
15	Ball Bearing A (Fig. 14)		1	9000102	9000103				
16	Ball Bearing B (Fig. 14)		1	9000201			9000202		9000300
17	Ball Bearing C (Fig. 14)		1	9000104	9000105		9000106		
17A	Ball Bearing D (Fig. 14)		1	9000104	9000105		9000106		
18	Load Sheave		1	CF116005	CF116010		CF116015		CF116A050 (Assy)
19	Load Gear		1	CF114005	CF114010		CF114015		
20	Chain Guide		1		CF178010		CF178015		
20A	Guide Roller		2	CF161005					
21	Stripper		1	CF162005	CF162010		CF162015		
22	Socket Bolt for Body		2	9091282	9091284		9091285		
22A	Socket Bolt for Body		2	9091280	9091282		9091283		
23	U-Nut for Body		4	ES857005S					
24	Pawl Pin		1	CF156005					
25	U-Nut for Fig. 24		1	ES857005S					
26	Pawl Spring		1	CF158005					
27	Pawl		1	CF155005					
28	Snap Ring for Fig. 24		1	9047108					
29	Friction Disc		1	CF153005**	CF153010**				
				M3153005*	M3153020*				
30	Ratchet Disc		1	CF152005**	CF152010**				
				CF4152005*	CF4152010*				
31	Bushing for Ratchet Disc		1	M3154005*	M3154020*				
32-A	Friction Plate A		1	CF150005**	CF150010**				
				M3151005*	M3151020*				
32	Friction Plate B		1	CF151005	CF151010				
				M3151005*	M3151020*				
33	Hand Wheel		1	CF115005**	CF115010**		CF115015**		
				CF4115005*	CF4115010*		CF4115015*		
34	Wheel Stopper		1	CF159005	CF159010				
35	Wheel Stopper Pin		1	M2167005					
36	Split Pin for Fig. 35		1	9009485					
37	Wheel Cover		1	CF171005	CF171010		CF171015		
38	Screw for Fig. 37		3	CF187005					
39	Spring Washer for Fig. 37		3	9012709					
40	Tail Pin		1	CF164005	CF164010		CF164015		
41	Socket Bolt for Fig. 40		1	CF181005	CF181010				
42	Load Chain		ft	LCCF005	LCCF010		LCCF015		
43	Hand Chain		ft	HCCF005					
77	Warning Tag		1	WTAG9					
78	Chain Stopper Link		1	L4045030					
79	Hand Chain Masterlink		1	HCCF005ML					

*CF4 model only
**Parts discontinued

9.2 Additional 2 through 5 Ton Parts

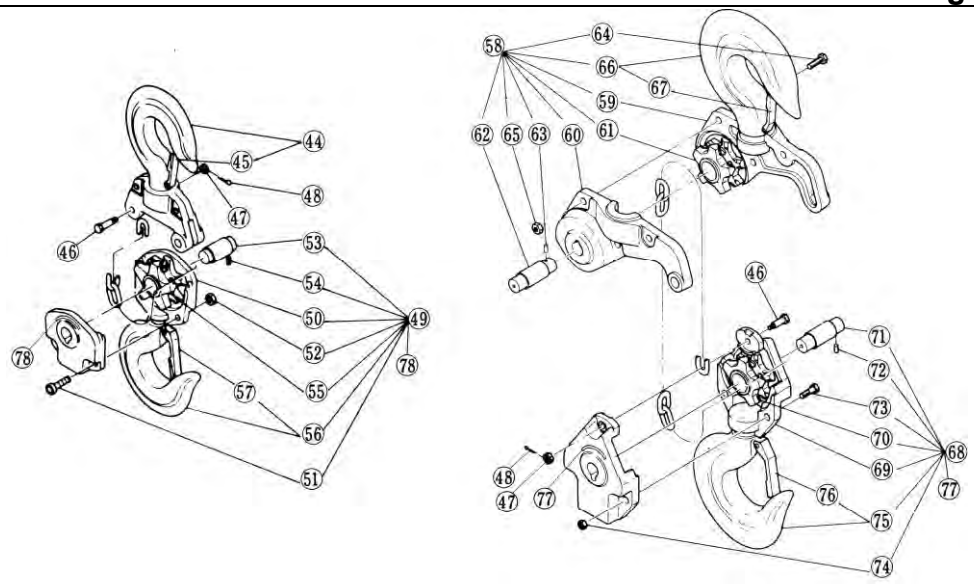

Figure 9-3 Additional 2 through 5 Ton Parts

Fig. No.	Name	Parts / Hoist	2 Ton	3 Ton	5 Ton
44	Top Hook Assembly	1	CF001020	CF001030	
45	Latch Assembly	1	CF071020	CF071030	
46	Chain Pin	1	CF041020	M3041030	
47	Slotted Nut for Fig. 46	1	M2049010		
48	Split Pin for Fig. 46	1	9009411		
49	Bottom Hook Complete Set	1	CF021A020	M3021A030	
50	Bottom Yoke	2	CF031020	M3031030	
51	Bolt	2	9091274	9091296	
52	U-Nut	2	ES857005S	ES066075	
53	Shaft	1	CF053020	CF053030	
54	Spring Pin	1	CF083020		
55	Idle Sheave	1	CF051020	CF051030	
56	Bottom Hook Assembly	1	CF021020	M3021030	
57	Latch Assembly	1	CF071020	CF071030	
78	Label	1	80173		
58	Top Hook Complete Set	1			CF001A050
59	Top Yoke A	1			CF011050
60	Top Yoke B	1			CF012050
61	Idle Sheave	1			CF051030
62	Shaft	1			CF053050
63	Spring Pin	1			CF083020
64	Socket Bolt	3			9091296
65	U-Nut	3			9098508
66	Top Hook Assembly	1			M3021050
67	Latch Assembly	1			CF071050
68	Bottom Hook Complete Set	1			CF021A050
69	Bottom Yoke Assembly	1			CF031050
70	Idle Sheave	1			CF051030
71	Shaft	1			CF053050
72	Spring Pin	1			CF083020
73	Socket Bolt	2			9091296
74	U-Nut	2			ES066075
75	Bottom Hook Assembly	1			M3021050
76	Latch Assembly	1			CF071050
77	Label	1			80173

9.3 Optional Hooks

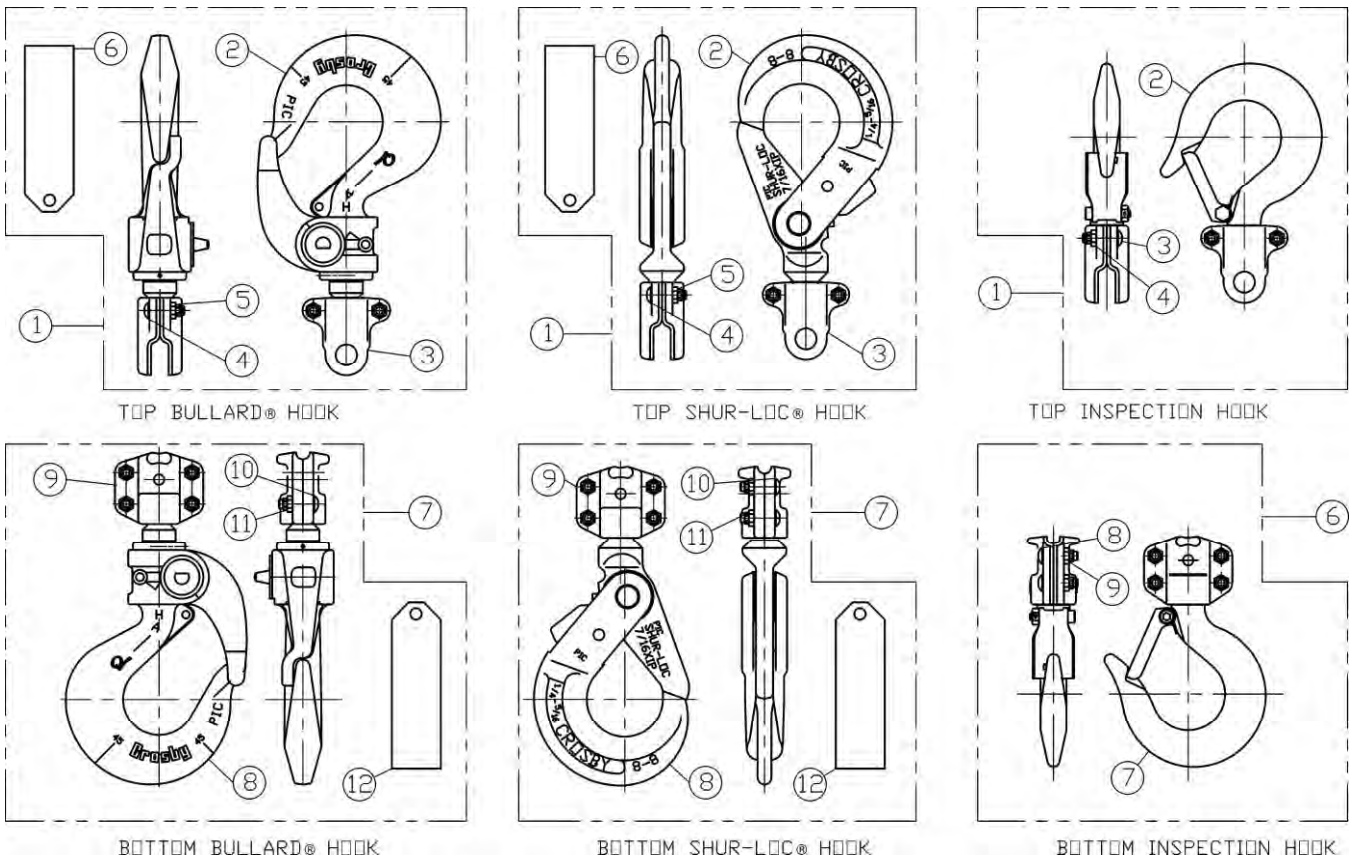

Figure 9-3 Bullard®, Shur-Loc® and Inspection Hooks

Bullard® Hooks

Fig. No.	Name	Parts Per Hoist	1/2 Ton	1 Ton	1 1/2 Ton	2 Ton	3 Ton	5 Ton
1	Bullard® Top Hook Complete Set	1	6027601	6027602	6027603			6027606
2	Bullard® Hook Assembly	1	60160	60162	60164			60169
3	Top Yoke Kit	1	TYKITCB005	TYKITCB010	TYKITCB015			
4	Button Head Screw	2	9012612		9012602			
5	Flexloc® Nut**	2	9012613		9012604			
6	Warning Tag	1	WTAG6*					WTAG6*
7	Bullard® Bottom Hook Complete Set	1	6027801	6027802	6027803	6027805	6027807	6027808
8	Bullard® Hook Assembly	1	60160	60162	60164	60165	60168	60169
9	Bottom Yoke Kit	1	BYKITCB005	BYKITCB010	BYKITCB015			
10	Button Head Screw	4	9012612		9012602			
11	Flexloc® Nut**	4	9012613		9012604			
12	Warning Tag*	1	WTAG6*					

*Hoist with Bullard® Hook(s) must have WTAG6 and WTAG9 installed. (See page 6 for WTAG9).
**See Table 6-3 in Owner's Manual for yoke nut torque specifications.

9.3 Optional Hooks

Shur-Loc® Hooks

Fig. No.	Name	Parts Per Hoist	1/2 Ton	1 Ton	1 1/2 Ton	2 Ton	3 Ton	5 Ton
1	Shur-Loc® Top Hook Complete Set	1	6030201	6030202	6030203			
2	Shur-Loc® Hook Assembly	1	60140	60142	60144			
3	Top Yoke Kit	1	TYKITCB005	TYKITCB010	TYKITCB015			
4	Button Head Screw	2	9012612		9012602			
5	Flexloc® Nut**	2	9012613		9012604			
6	Warning Tag	1	WTAG6*					
7	Shur-Loc® Bottom Hook Complete Set	1	6030101	6030102	6030103	6030105	6030107	
8	Shur-Loc® Hook Assembly	1	60140	60142	60144	60145	60148	
9	Bottom Yoke Kit	1	BYKITCB005	BYKITCB010	BYKITCB015			
10	Button Head Screw	4	9012612		9012602			
11	Flexloc® Nut**	4	9012613		9012604			
12	Warning Tag	1	WTAG6*					

*Hoist with Shur-Loc® Hook(s) must have WTAG6 and WTAG9 installed. (See page 6 for WTAG9).
**See Table 6-3 in Owner's Manual for yoke nut torque specifications.

Inspection Hooks

Fig. No.	Name	Parts Per Hoist	1/2 Ton	1 Ton	1 1/2 Ton	2 Ton	3 Ton	5 Ton
1	Top Hook Complete Set	1	M3001A005IK	M3001A010IK	M3001A015IK			
2	Hook W/Latch & Yoke	1	M3001A005IH	M3001A010IH	M3001A015IH			
3	Button Head Screw	2	9012612		9012602			
4	Flexloc® Nut*	2	9012613		9012604			
6	Bottom Hook Complete Set	1	M3021A005IK	M3021A010IK	M3021A015IK			
7	Hook W/Latch & Yoke	1	M3021A005IH	M3021A010IH	M3021A015IH			
8	Button Head Screw	2	9012612		9012602			
9	Flexloc® Nut*	2	9012613		9012604			

*See Table 6-3 in Owner's Manual for yoke nut torque specifications.

9.4 Optional Chain Containers

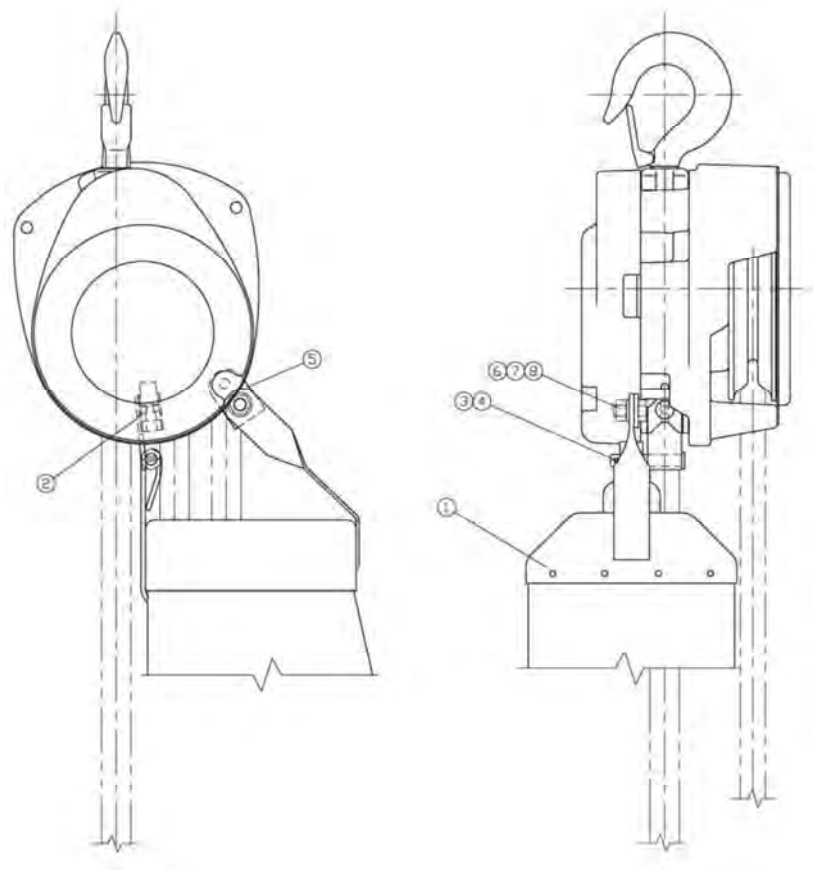

Figure 9-4 CF4 Optional Chain Container

CF4 OPTIONAL CHAIN CONTAINERS

Fig. No.	Name	Parts Per Hoist	1/2 Ton	1 Ton	1 1/2 Ton	2 Ton	3 Ton	5 Ton
	"05" Chain Container (BKC1) Assembly	1	60711	60713	60715	60713	60715	
1	Chain Container	1	50810	50810	50810	50810	50810	
2	Modified Stripper Ass'y	1	5078903	5076004	5080404	5076004	5080404	
3	Split Pin	1	9009412	9009412	9009412	9009412	9009412	
4	Washer	1	9005205	9005205	9005205	9005205	9005205	
5	Link	1	5076005	5076005	5076005	5076005	5076005	
6	Washer	2	9012513	9012513	9012513	9012513	9012513	
7	Hex Head Bolt	1	9093327	9093328	9093328	9093328	9093328	
8	Lock-Nut	1	9098506	9098506	9098506	9098506	9098506	
	"10" Chain Container (BKD1) Assembly	1	60712	60714	60716	60714	60716	
1	Chain Container	1	5080403	5080403	5080403	5080403	5080403	
2	Modified Stripper Ass'y	1	5078903	5076004	5080404	5076004	5080404	
3	Split Pin	1	9009412	9009412	9009412	9009412	9009412	
4	Washer	1	9005205	9005205	9005205	9005205	9005205	
5	Link	1	5076005	5076005	5076005	5076005	5076005	
6	Washer	2	9012513	9012513	9012513	9012513	9012513	
7	Hex Head Bolt	1	9093327	9093328	9093328	9093328	9093328	
8	Lock-Nut	1	9098506	9098506	9098506	9098506	9098506	