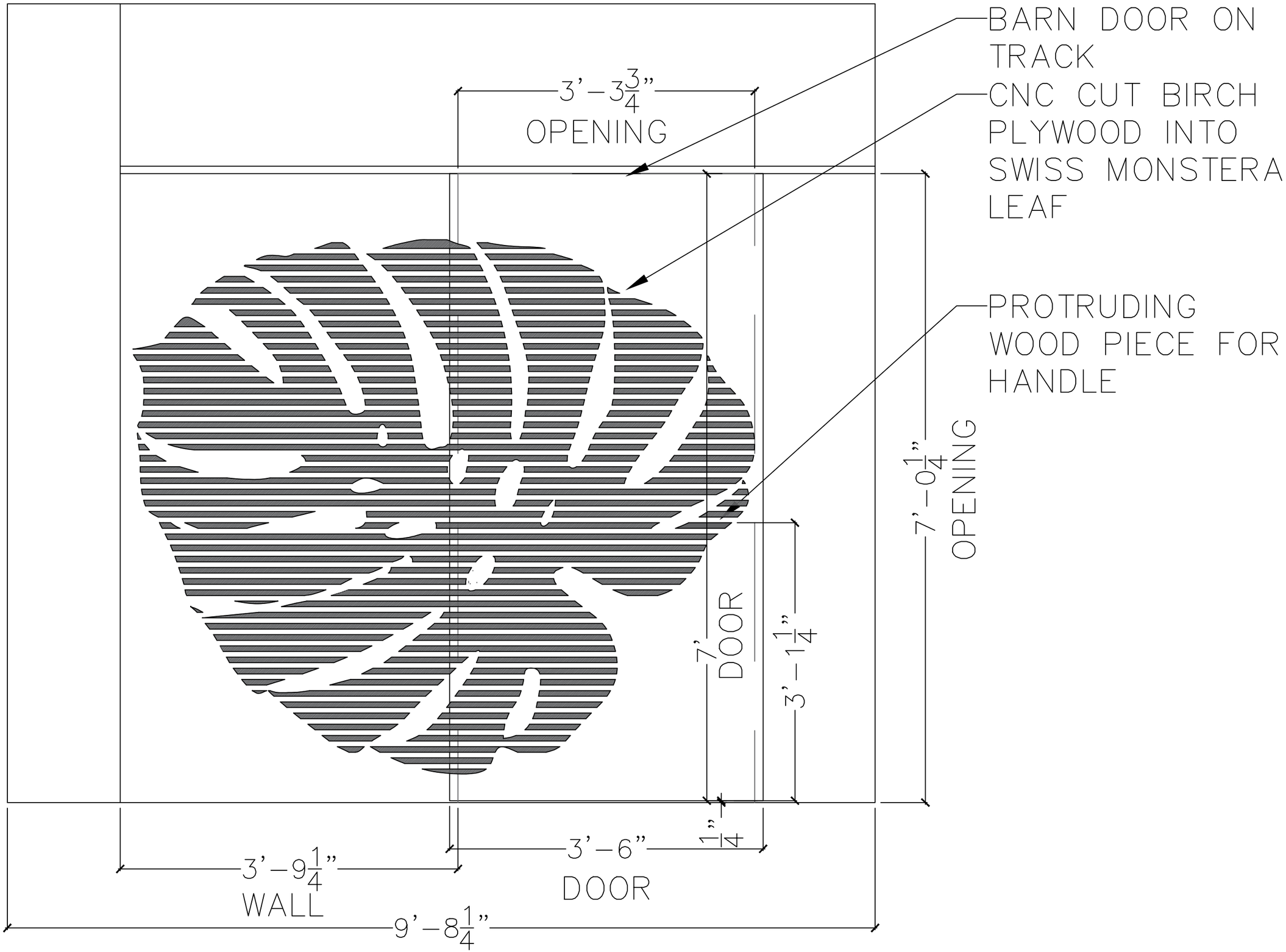
BARN DOOR ON TRACK
CNC CUT BIRCH PLYWOOD INTO SWISS MONSTERA LEAF
PROTRUDING WOOD PIECE FOR HANDLE
3'-3 3/4"
OPENING
7'-0 1/4"
OPENING
7'
DOOR
3'-1 1/4"
1 1/4"
3'-6"
DOOR
3'-9 1/4"
WALL
9'-8 1/4"