ENVIRO-COR ENTERPRISES LTD.

980 Colborne St, west

Brantoford ON N3T 0L4

Phone:519-753-0993 / Fax: 519753 2974

Application Data Sheet

Customer Information

Company Name			Contact Person	
Address			Telephone	
City	State	Zip	Fax No	Date

Silo/Bin Information

Dimensions

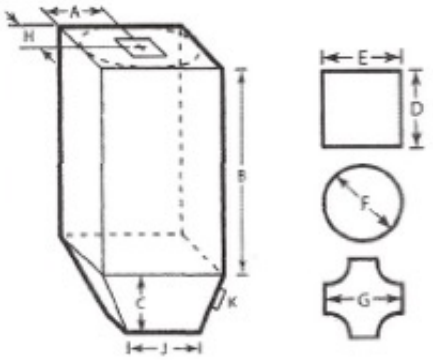

Please specify each dimension that applies to your bin/silo and indicate unit of measure for each as:

Ft = feet cm = centimeters
In = inches m = meters

A _____
B _____
C _____
D _____
E _____
F _____
G _____
H _____
J _____
K _____

	Yes	No
Is there an elevator to the top of the silo?	☐	☐
Are there explosion-proof lights available?	☐	☐
Are there explosion-proof outlets?	☐	☐
Are there instruments in the silo?	☐	☐
Is there a dust collection system?	☐	☐
Obstructions (above or below) Describe (within 2' any direction)	☐	☐

_____

_____

Manhole Opening:

Square ☐ Round ☐ Rect ☐

____ft. ____ in.x ____ ft. ____ in.

Depth: ____ ft. ____ in.

Silo/Bin Construction:

Concrete ☐

Steel ☐

Other ☐

Silo Identification # _____

Bin Top:

☐ Indoors ☐ Outdoors

Electrical Supply:

220-240 V 3Ph	☐ Yes	☐ No
440-480V 3 Ph	☐ Yes	☐ No
575-600V 3 Ph	☐ Yes	☐ No

Silo/Bin Condition

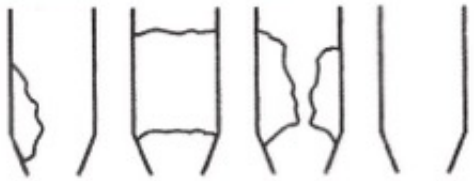

HANG-UP BRIDGING RAT-HOLE OTHER

(Please circle type of problem) (Please Sketch)

Description of Material _____

Quantity (Approximately) _____

Duration of clog _____

Hazardous? YES ☐ NO ☐

Notes

Please briefly explain your situation or include any details not covered above

_____

_____

_____

_____

_____

_____

_____

_____