LIGHT DUTY COMMERCIAL ROLL UP DOORS INSTALLATION MANUAL

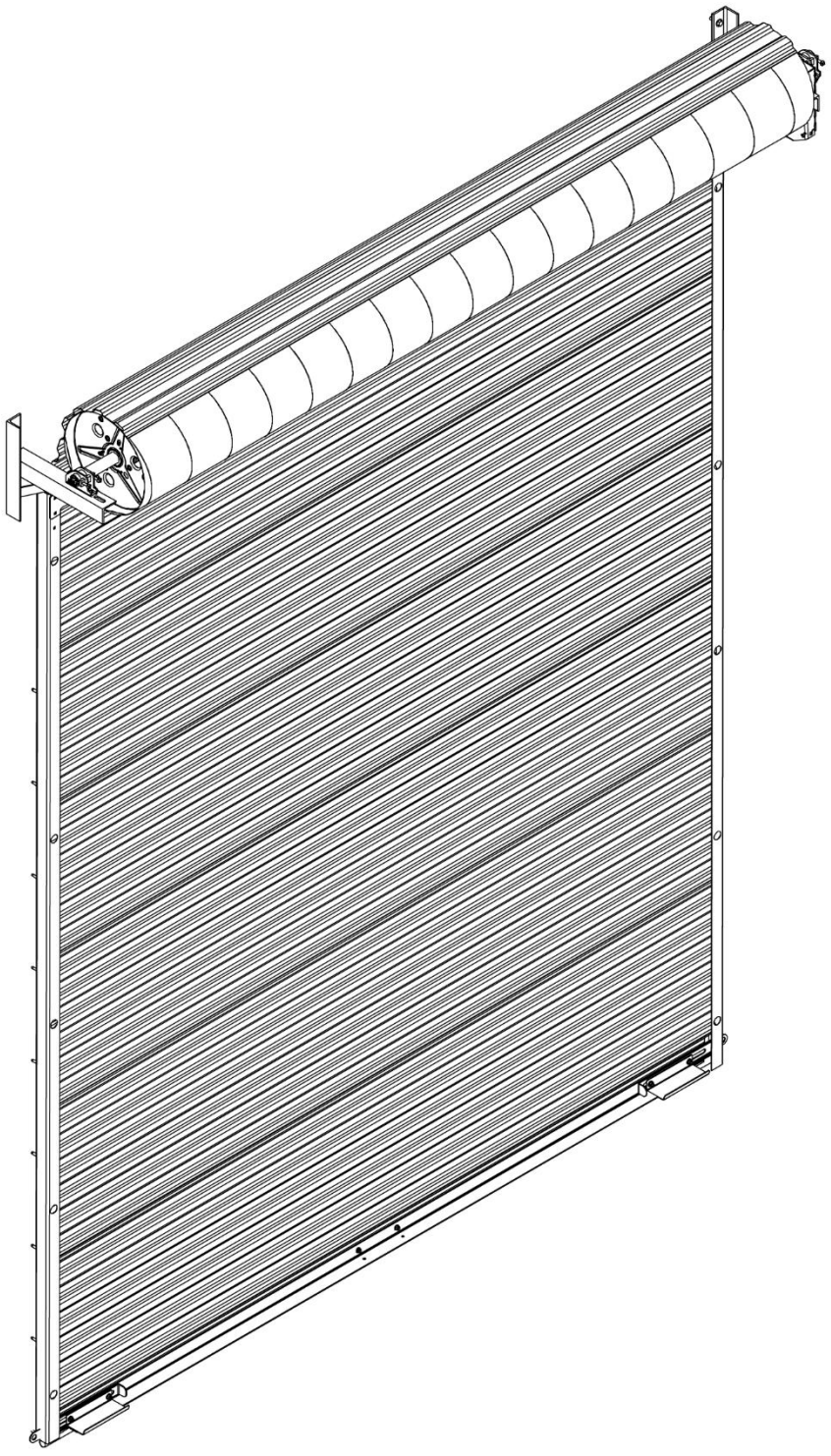

IMPORTANT INFORMATION

DOORS MUST BE INSTALLED BY TRAINED ROLLING DOOR TECHNICIANS QUALIFIED TO INSTALL PRODUCT SAFELY WITH PROPER KNOWLEDGE, TOOLS, SAFETY AND INSTALLATION EQUIPMENT. CAREFULLY READ INSTALLATION INSTRUCTIONS. FAMILIARIZE YOURSELF WITH ALL INSTALLATION PROCEDURES, WARNINGS, CAUTIONS, AND NOTES BEFORE ATTEMPTING TO INSTALL DOOR. WILL NOT WARRANTY OR ACCEPT RESPONSIBILITY FOR DOORS NOT INSTALLED PER THESE INSTALLATION INSTRUCTIONS.

- IMPORTANT SAFETY INFORMATION -

- CAREFULLY READ INSTALLATION INSTRUCTIONS. FAMILIARIZE YOURSELF WITH ALL INSTALLATION PROCEDURES, WARNINGS, CAUTIONS, AND NOTES BEFORE ATTEMPTING TO INSTALL DOOR.

- INSPECT RECEIVED DOOR ASSEMBLY FOR VISIBLE DAMAGE AND/OR COMPONENT SHORTAGES.

a. SHIPPING DAMAGE: FILE DAMAGE CLAIM IMMEDIATELY WITH FREIGHT CARRIER. SUPPLY DOOR SUPPLIER WITH PHOTO DOCUMENTATION TO RECEIVE REPLACEMENT COMPONENTS.

b. PART SHORTAGE: IMMEDIATELY CONTACT DOOR SUPPLIER WITH PARTS SHORTAGE CLAIM. ORDER NUMBER, DOOR MODEL, PHOTO DOCUMENTATION ARE ENCOURAGED TO EXPEDITE PROCESS.

c. INCORRECT PARTS: IF RECEIVED DOOR COMPONENTS AND PARTS DO NOT MATCH THOSE REFERENCED IN THESE INSTALLATION INSTRUCTIONS, IMMEDIATELY CONTACT DOOR SUPPLIER.

- IF AT ANY TIME BEFORE OR DURING INSTALLATION YOU ARE UNFAMILIAR, UNCOMFORTABLE, OR CONFUSED BY INSTALLATION PROCEDURES OUTLINED IN THESE INSTALLATION INSTRUCTIONS DO NOT ATTEMPT TO INSTALL DOOR ASSEMBLY. IMMEDIATELY CONTACT DOOR SUPPLIER WITH QUESTIONS/CONCERNS.

DOORS MUST BE INSTALLED BY TRAINED ROLLING DOOR TECHNICIANS QUALIFIED TO INSTALL PRODUCT SAFELY WITH PROPER KNOWLEDGE, TOOLS, SAFETY AND INSTALLATION EQUIPMENT.

- READ ALL WARNINGS BELOW -

- USE APPROPRIATE SAFETY EQUIPMENT TO AVOID SERIOUS INJURY.
- CLEAR FLOOR AT OPENING OF ALL DEBRIS BEFORE INSTALLING PRODUCT.
- USE APPROPRIATE LIFTING EQUIPMENT AND CORRECT LIFTING PROCEDURES TO AVOID DAMAGE, SERIOUS INJURY OR DEATH.
- MOVING DOOR COULD RESULT IN DEATH OR SERIOUS INJURY. DO NOT CLOSE DOOR UNTIL DOORWAY IS CLEAR.
- CONTROL THE SPEED OF THE DOOR DURING MANUAL OPERATION.
- DO NOT STAND OR WALK UNDER A MOVING DOOR.
- KEEP DOORWAY CLEAR AND IN FULL VIEW WHILE OPERATING DOOR.
- DO NOT PERMIT CHILDREN TO PLAY ON, NEAR, OR WITH DOOR, OR OPERATE DOOR CONTROLS.
- UNLOCK DOOR BEFORE OPENING DOOR.
- SENSING DEVICES ON MOTOR OPERATING DOORS SHOULD BE TESTED FREQUENTLY.
- VISUALLY INSPECT DOOR AND HARDWARE MONTHLY FOR WORN AND/OR BROKEN PARTS AND CHECK IF DOOR OPERATES FREELY. DO NOT OPERATE A DOOR WITH A BROKEN SPRING.
- COMPONENTS ARE UNDER EXTREME SPRING TENSION COULD RESULT IN DEATH OR SERIOUS INJURY.
- DOOR MUST BE FULLY OPENED WHEN MAKING ADJUSTMENTS.

►Retain these instructions for reference.

HANDLE WITH CARE - DO's & DON'T's

DO's

- CAREFULLY INSPECT ALL PRODUCT FOR DAMAGE UPON RECEIPT.
- USE PROTECTIVE FOAM BETWEEN PRODUCT AND ANY SURFACE OR OBJECT IT MAY COME INTO CONTACT WITH WHILE IN TRANSIT AND/OR STORAGE.
- WHEN SECURING PRODUCT FOR TRANSIT, USE FOAM BARRIER BETWEEN PRODUCT AND STRAPS, ROPES, ETC.
- CAREFULLY UNLOAD PRODUCT FROM ANY TYPE OF CRATING MATERIAL ASSURING NO CONTACT WITH FASTENERS OR SHARP EDGES.
- CLEAR FLOOR AT OPENING OF ALL DEBRIS BEFORE INSTALLING PRODUCT.
- SINGLE PERSON LIFTING OF PRODUCT COULD CAUSE INJURY. USE ASSISTANCE WHEN MOVING OR LIFTING.
- INSTALL PRODUCT WITH APPROPRIATE LIFTING EQUIPMENT ASSURING A PROTECTIVE BARRIER IS MAINTAINED BETWEEN PRODUCT AND ANY SURFACE OR OBJECT IT MAY COME INTO CONTACT WITH

DON'T's

- DO NOT - STAND ON PRODUCT.
- DO NOT - CLIMB ON PRODUCT.
- DO NOT - WALK ON PRODUCT.
- DO NOT - DROP PRODUCT.
- DO NOT - SLIDE PRODUCT ACROSS ANY SURFACE.
- DO NOT - THROW OR TOSS PRODUCT.
- DO NOT - SET OR STACK PRODUCT ON GRAVEL, DEBRIS, OR UNEVEN SURFACES.
- DO NOT - ALLOW SHARP OBJECTS TO COME IN CONTACT WITH PRODUCT.
- DO NOT - LEAVE PRODUCT UNSECURED WHILE IN TRANSIT OR DURING INSTALLATION.

FAILURE TO ADHERE TO THE ABOVE CONDITIONS WILL RESULT IN PERSONAL INJURY OR PRODUCT DAMAGE NOT COVERED UNDER PRODUCT WARRANTY. ALWAYS HANDLE PRODUCT WITH CARE, AND REVIEW ALL INSTRUCTIONS, WARNINGS, AND NOTES BEFORE INSTALLING PRODUCT.

REVIEW DOOR ASSEMBLY AND GENERAL PARTS DESCRIPTIONS BILL OF MATERIAL FROM PAGE 4, FIGURE 1 TO FAMILIARIZE YOURSELF WITH COMMON PARTS OF ROLLING SHEET DOOR ASSEMBLY.

DOOR ASSEMBLIES ARE MANUFACTURED PER OPENING WIDTHS AND HEIGHTS SPECIFIED AT TIME OF ORDER. WILL NOT BE HELD RESPONSIBLE FOR OPENING WIDTHS OR HEIGHTS THAT DO NOT MATCH THOSE SPECIFIED AT TIME OF ORDER.

DOOR ASSEMBLY & GENERAL PART DESCRIPTIONS

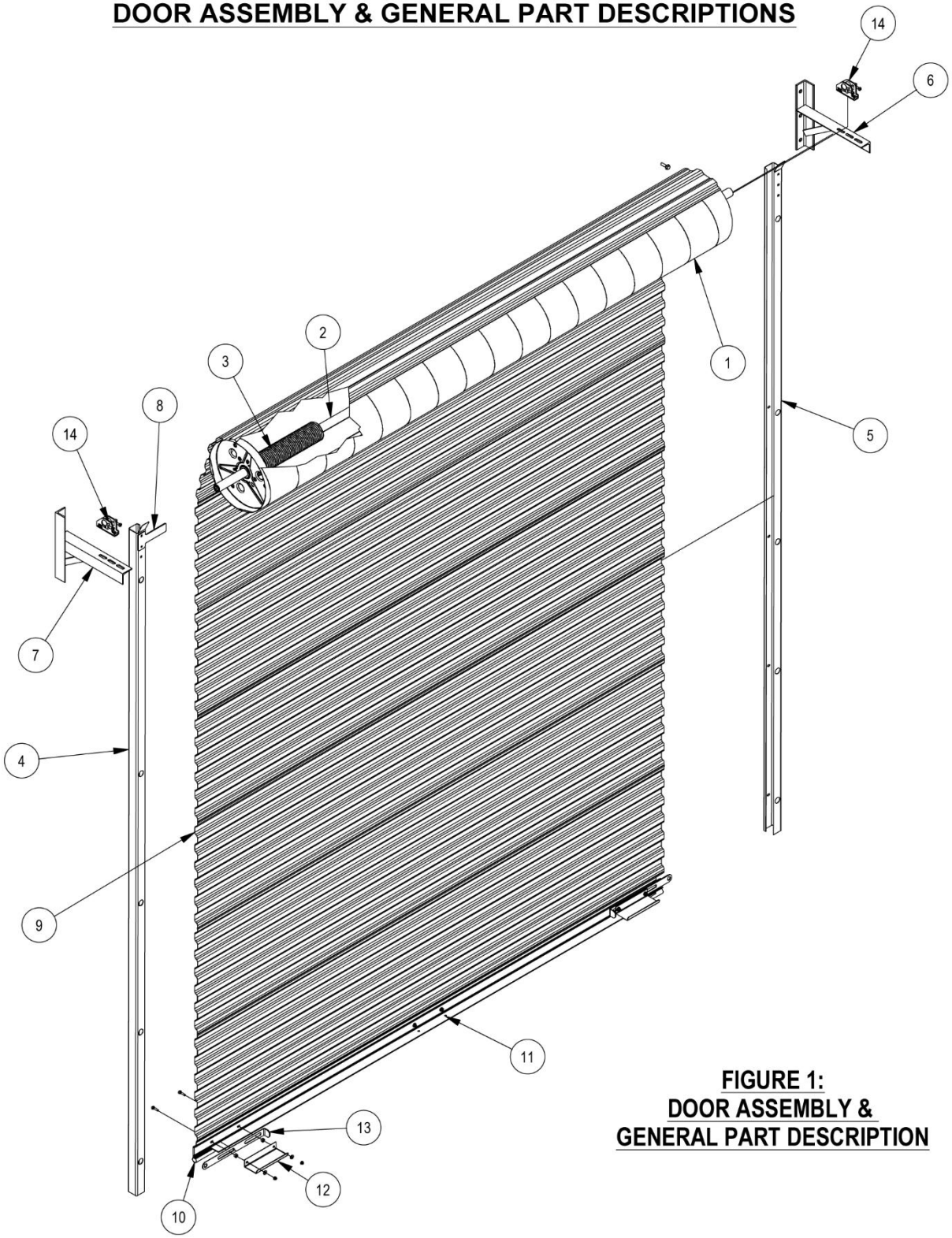

FIGURE 1:
DOOR ASSEMBLY &
GENERAL PART DESCRIPTION

Operation & Maintenance Manual available via pdf download @ www.Dbci.com or upon request

GENERAL BILL OF MATERIALS

ITEM	DESCRIPTION / PART NUMBER	ITEM	DESCRIPTION / PART NUMBER	ITEM	DESCRIPTION / PART NUMBER
1	12" Spiral Barrel	7	LH T-Bracket	13	Comm. Slide lock
2	1 $\frac{5}{16}$" O.D. Axle	8	Comm. Headstop	14	Stamped Axle Support
3	Spring/Counterbalance Assembly	9	26 Ga. Corrugated Curtain	15	-
4	LH, 16Ga, Comm. Guide	10	Astragal	16	-
5	RH, 16Ga, Comm. Guide	11	Bottom Bar Assembly	17	-
6	RH T-Bracket	12	Comm. Step Plate	18	-

HEADROOM/SIDEROOM DIMENSIONAL REFERENCES

FIGURE 2: HEADROOM REQUIREMENT CHART

HEADROOM REQUIREMENT		
OPENING HEIGHT	**VERTICAL HEADROOM**	**HORIZONTAL HEADROOM**
THUR 10'-0"	22"	21"
OVER 10'-0" THRU 14'-0"	24"	21"
OVER 14'-0" THRU 16'-0"	26"	21"
OVER 16'-0" THRU 20'-0"	26"	22"

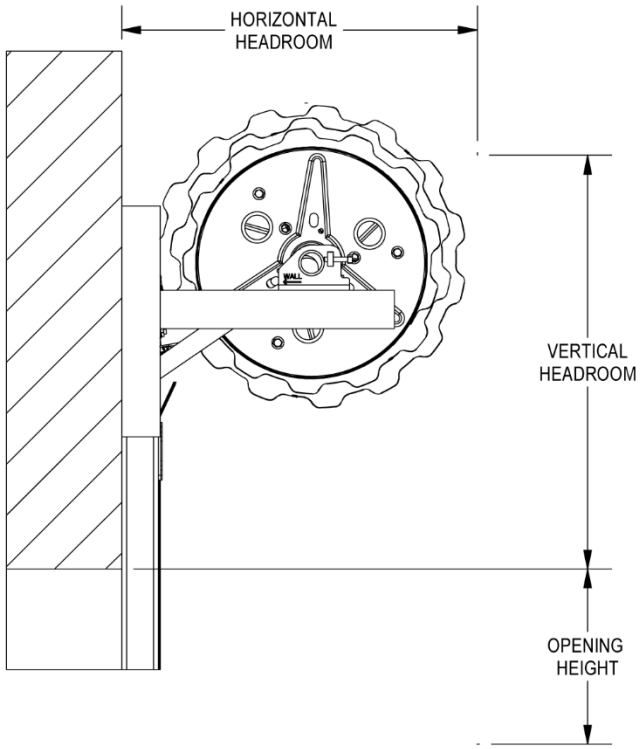

FIGURE 3: SIDEROOM CLEARANCE REQUIREMENT CHART

TABLE A: SIDEROOM CLEARANCE REQUIREMENTS (2000DB)

OPERATION	OUTSIDE OF BRACKET REDUCED DRIVE END	OUTSIDE OF BRACKET DRIVE END	OUTSIDE OF HAND CHAIN	END OF AXLE - DRIVE END	END OF AXLE - REDUCED DRIVE END
PUSH-UP	5"	5"	--	8 ½"	8 ½"
REDUCED HAND CHAIN	5"	8 ½"	6 ½"	8 ½"	8 ½"
ELECTRIC	5"	8 ½"	--	8 ½"	8 ½"
ATA EASY ROLLER 14	5"	6 ½"	--	8 ½"	8 ½"
ATA SHEDMASTER	5"	6 ½"	--	8 ½"	8 ½"
ATA HIRO	5"	6 ½"	--	8 ½"	8 ½"

IMPORTANT NOTES:

- DIMENSIONS ARE REFERENCED FROM THE EDGE OF THE OPENING.
- FOR CRITICAL FITS DUE TO REDUCED AVAILABLE HEADROOM OR SIDEROOM CLEARANCES, CONSULT FACTORY.

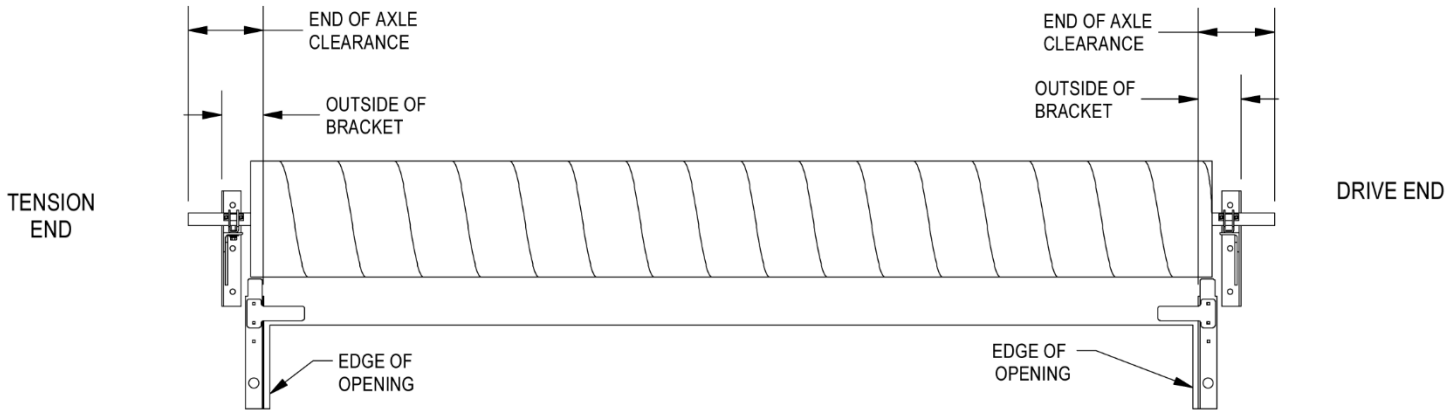

STEP 1: WALL OPENING

►Check wall opening width and height and verify these measurements against size of door to be installed.

►Verify that jambs are plumb.

►Check floor and header for level.

►Check for adequate side clearance at jambs and clearance above and at sides of header. Check vertical and horizontal headroom requirements. ***See Figures 2 & 3*** for minimum requirements.

►Verify that guide mounting surface on jamb is flush.

FIGURE 4: WALL OPENING

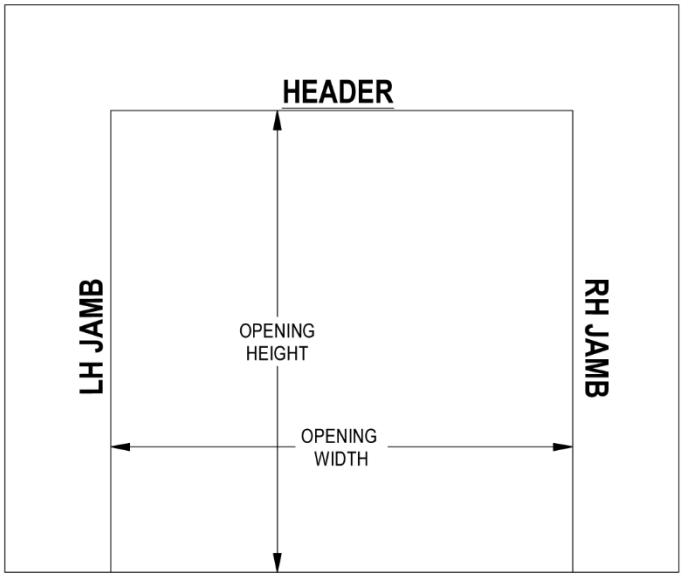

STEP 2: INSTALLING MOUNTING PLATES

Doors mounted to steel or wood jambs will require mounting plates to be installed on each jamb. (1) Large and (1) Small Mounting Plate provided as standard. For doors mounted to a flush surface, such as concrete or CMU wall, skip this step and go to Step 3.

► If you are using a chain hoist, electric operator, or ATA operator, a large mounting plate is required. A small mounting plate will be installed on tension side of door.

►Large Mounting Plate to be installed on drive side of door. Small mounting plate installed on opposite side (non drive) of door.

► On both small and large mounting plates, hole pattern closest to plate edge will be used for attachment to door jamb. ***See Figure 5.***

►Attach the mounting plates 1" from edge of door jamb and 3 ⅜" above the lower edge of the door header. Door brackets must be level with each other for proper door operation.

NOTE:
DOOR DRIVE OPERATION MAY BE INSTALLED ON EITHER END OF DOOR ASSEMBLY.

FIGURE 5: MOUNTING PLATES

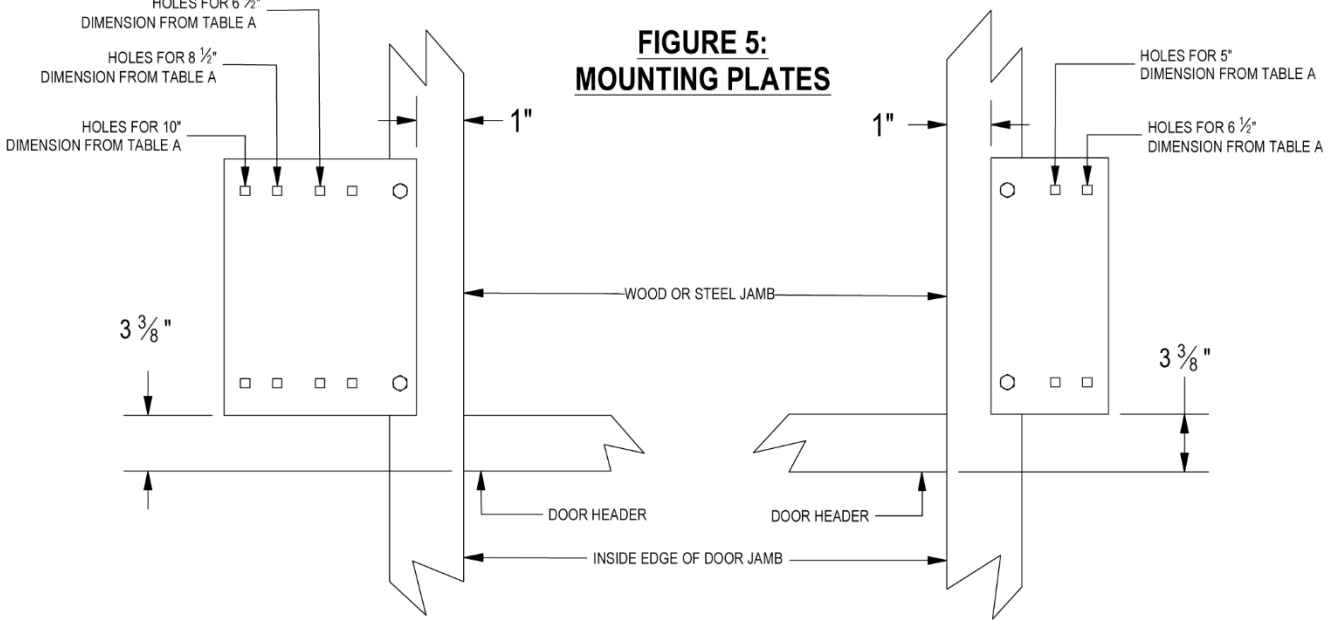

STEP 3: DOOR BRACKET INSTALLATION TO FLUSH WALL

► If you are installing door to a flush wall, attach door brackets to wall using appropriate dimensions provided in ***Table A.***

►Height of door bracket above top of the door opening is 11". ***See Figure 6***

►Attach door brackets to jamb with fasteners provided. ***Table B.***



FIGURE 6:
DOOR BRACKET TO JAMB

TABLE B: WALL FASTENERS FOR JAMB ATTACHEMENT OF BRACKETS			
ITEM	**JAMB**	**FASTENERS**	**DRILL SIZE**
BRACKETS	STEEL	3/8 - 16 X 1 1/4" HEX BOLT AND NUT	7/16"
BRACKETS	CONCRETE / FILLED BLOCK	3/8" X 4" WEDGE-BOLT	3/8"
BRACKETS	WOOD	3/8 X 3" LAG SCREW	15/64"

WARNING!

- DOOR CAN FALL IF BOTH BRACKETS ARE NOT SECURELY FASTENED TO THE JAMBS. ALL FASTENERS ATTACHING BRACKETS TO JAMBS MUST FIT SECURELY INTO A STRUCTURAL MEMBER OR SURFACE. IF DOOR FALLS, SERIOUS INJURY OR DEATH AND/OR DAMAGE TO DOOR CAN RESULT.
- DOOR BRACKETS MUST BE LEVEL WITH EACH OTHER FOR PROPER DOOR OPERATION.

STEP 4: DOOR BRACKET INSTALLATION TO MOUNTING PLATES

► Attach the door brackets to the set of holes in mounting plate that correspond to the appropriate dimensions provided in ***Table A***.

FIGURE 7:
DOOR BRACKET TO MOUNTING PLATE

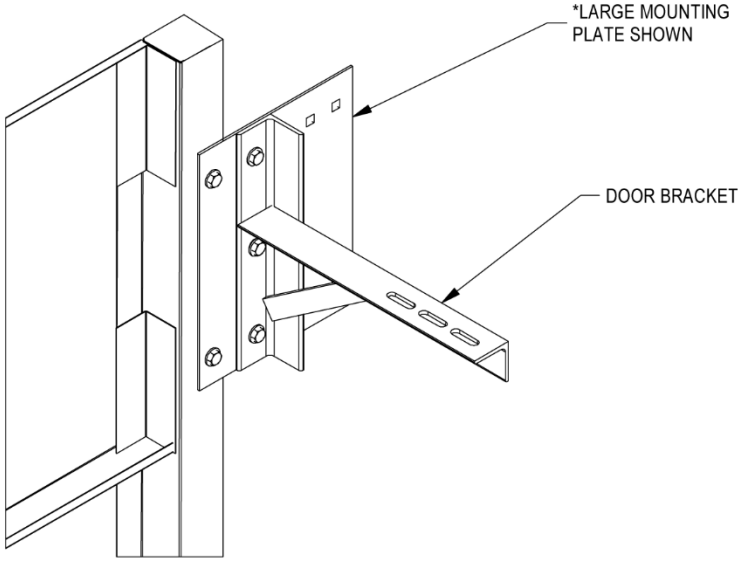

STEP 3: DOOR BRACKET INSTALLATION TO FLUSH WALL

► If you are installing door to a flush wall, attach door brackets to wall using appropriate dimensions provided in ***Table A.***

►Height of door bracket above top of the door opening is 11". ***See Figure 6***

►Attach door brackets to jamb with fasteners provided. ***Table B.***



FIGURE 6:
DOOR BRACKET TO JAMB

TABLE B: WALL FASTENERS FOR JAMB ATTACHEMENT OF BRACKETS			
ITEM	**JAMB**	**FASTENERS**	**DRILL SIZE**
BRACKETS	STEEL	3/8 - 16 X 1 1/4" HEX BOLT AND NUT	7/16"
BRACKETS	CONCRETE / FILLED BLOCK	3/8" X 4" WEDGE-BOLT	3/8"
BRACKETS	WOOD	3/8 X 3" LAG SCREW	15/64"

WARNING!

- DOOR CAN FALL IF BOTH BRACKETS ARE NOT SECURELY FASTENED TO THE JAMBS. ALL FASTENERS ATTACHING BRACKETS TO JAMBS MUST FIT SECURELY INTO A STRUCTURAL MEMBER OR SURFACE. IF DOOR FALLS, SERIOUS INJURY OR DEATH AND/OR DAMAGE TO DOOR CAN RESULT.
- DOOR BRACKETS MUST BE LEVEL WITH EACH OTHER FOR PROPER DOOR OPERATION.

STEP 4: DOOR BRACKET INSTALLATION TO MOUNTING PLATES

► Attach the door brackets to the set of holes in mounting plate that correspond to the appropriate dimensions provided in ***Table A***.

FIGURE 7:
DOOR BRACKET TO MOUNTING PLATE

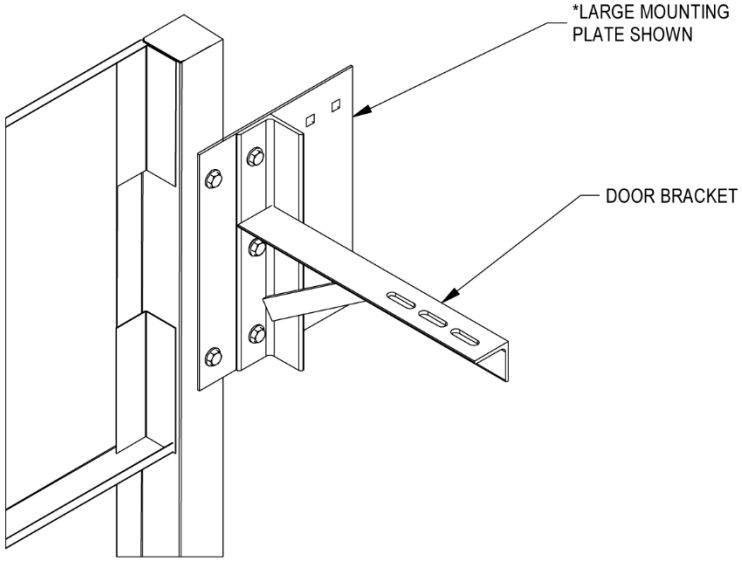

STEP 5: STAMPED AXLE SUPPORT PLACEMENT

► Using one (1) Stamped Axle Support per side, with directional arrows pointing toward wall, slide Stamped Axle Support over axle.

►Tighten 3/8" - 16 square head set screws when in place. ***See Figures 8.***

FIGURE 8:
SECURING THE STAMPED AXLE SUPPORT

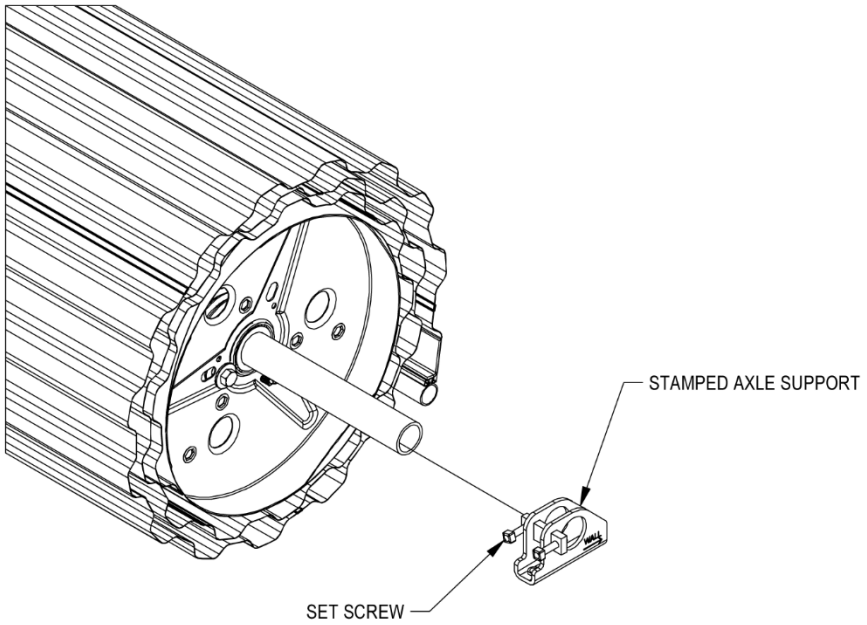

IF DOOR IS MANUALLY OPERATED SKIP TO STEP 9 OF INSTRUCTIONS

STEP 6: 4:1 CHAIN HOIST (IF REQUIRED)

► Attach Support Spacer, and Sprocket to Drum using (6) 3/8" flat washers, (3) 3/8-16 x 2-3/4" hex bolt and 3/8" lock washers

► Slide reduced drive assembly over axle and align sprockets.

► Slide the Stamped Axle Support onto axle.

►Tighten 3/8" - 16 square head set screws when in place. ***See Figure 9.***

CURTAIN REMOVED FROM ILLUSTRATION

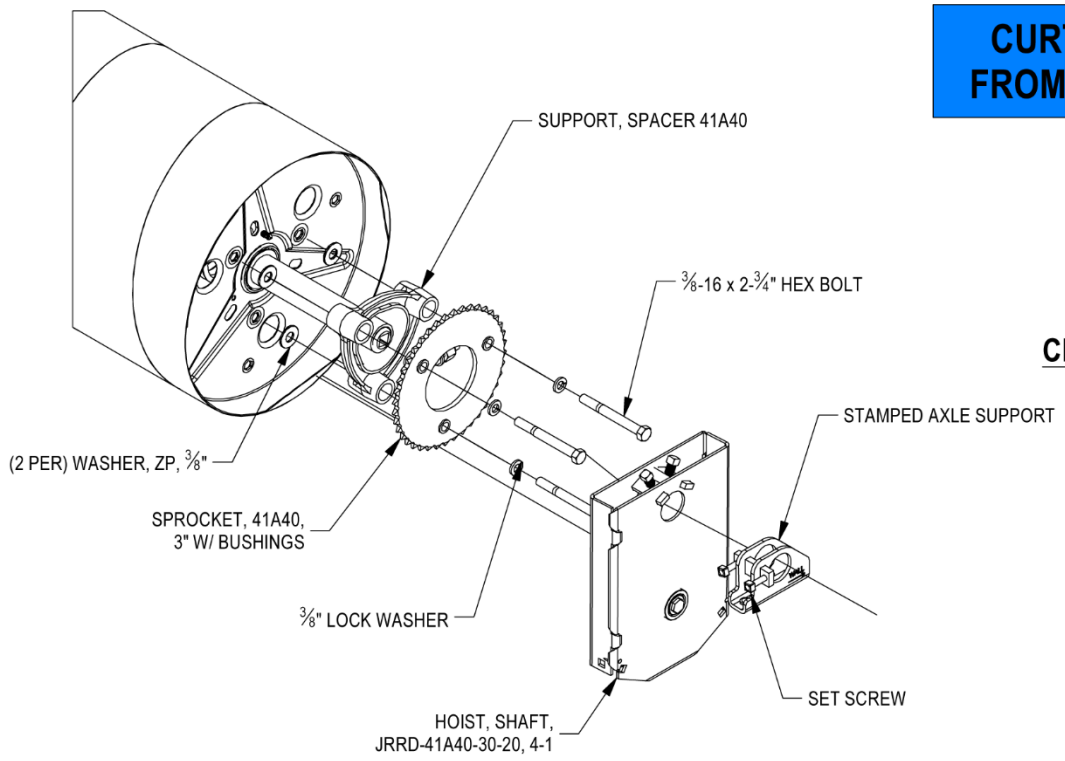

FIGURE 9:
CHAIN HOIST 4:1

NOTE:
FOR 8:1 SEE PAGE 19.

STEP 7: ATA ELECTRIC MOTOR (IF REQUIRED)

► Make sure drum adapter is aligned with the axle of the door assembly

► Attach drum adapter using the ATA Tek screws and ATA hex bolt. ***See Figure 10.***

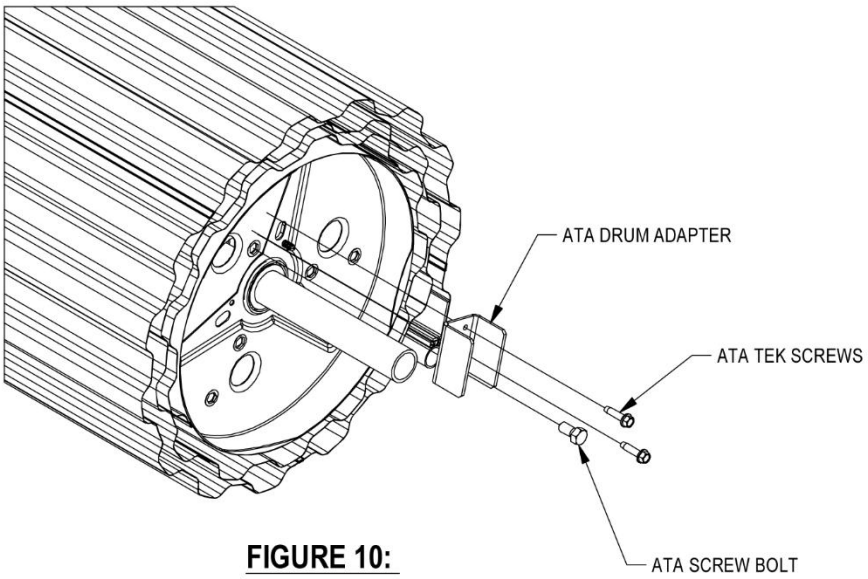

FIGURE 10:
DRUM ADAPTER

ATA ELECTRIC MOTOR (CONTINUED)

► Slide ATA operator over the axle. Make sure that the U-bolt of the operator goes over as well. ***See Figure 11.***

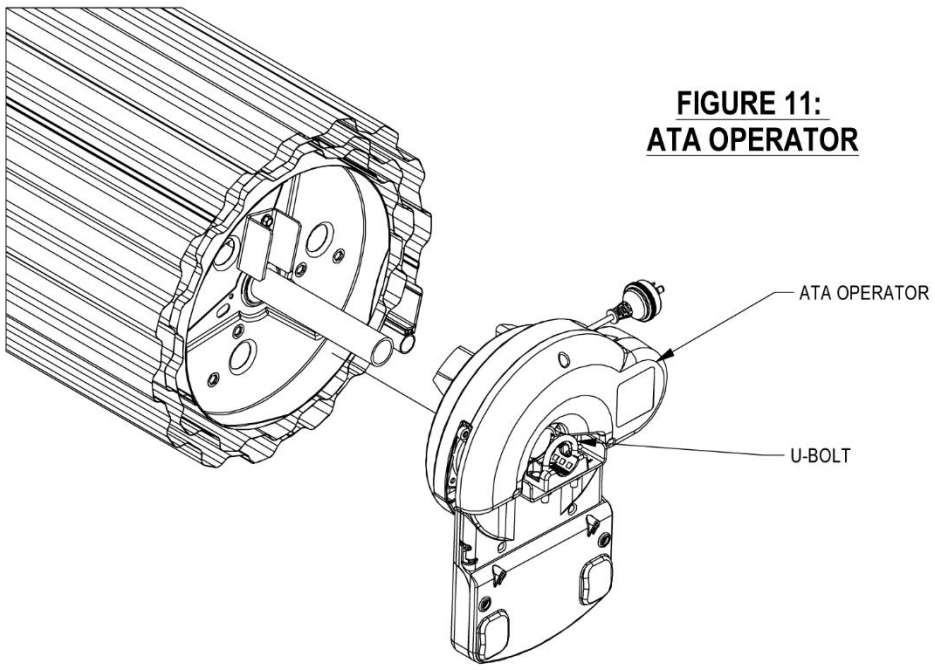

FIGURE 11:
ATA OPERATOR

STEP 8: ELECTRIC DRIVE END (IF REQUIRED)

►Attach Support Spacer and Spocket to drum using (6) 3/8" Flat washers, (3) 3/8"lock washers and 3/8-16 x 3-1/2" Hex bolts.

► Slide the Stamped Axle Support onto the axle.

►Tighten 3/8" - 16 square head set screws when in place. ***See Figures 12.***

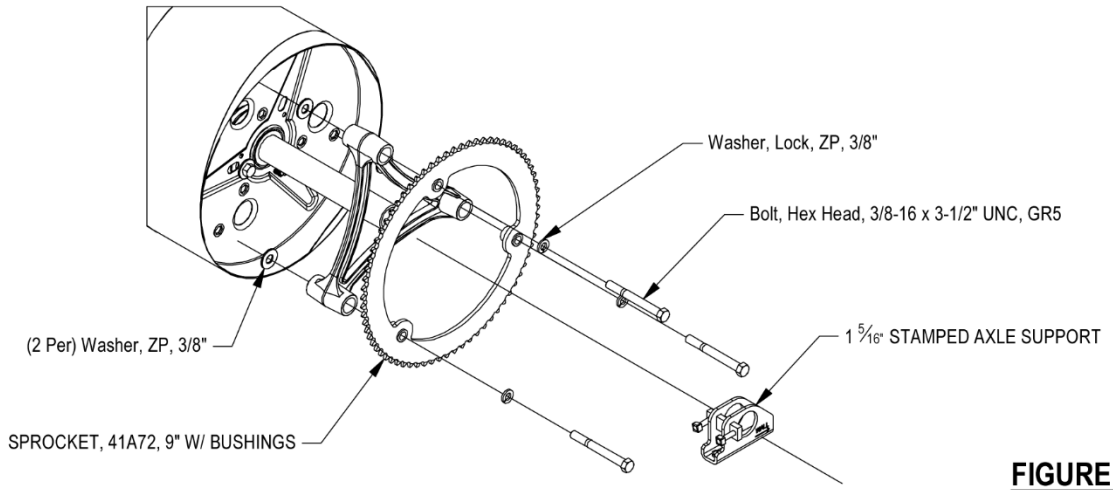

FIGURE 12:
ELECTRIC OPERATOR

WARNING!
BEFORE LIFTING DOOR INTO POSITION, ENSURE THAT ALL SET SCREWS ARE TIGHTENED TO ADEQUATELY SECURE STAMPED AXLE SUPPORT. FAILURE TO SECURE WILL RESULT IN FALLING PARTS, WHICH WILL LEAD TO SERIOUS INJURY OR DEATH.

WARNING!
DO NOT ALLOW DOOR ASSEMBLY TO ROLL OFF BRACKETS OR MOVE SIDEWAYS OFF EDGE OF BRACKET. IF DOOR FALLS, SERIOUS INJURY OR DEATH AND/OR DAMAGE TO DOOR CAN RESULT.

STEP 9: LIFTING DOOR

►Raise door using appropriate lifting equipment, ensuring a protective barrier is maintained between product and any surface or object that it may come into contact with.

►Position door on brackets with both Stamped Axle Supports resting safely on top of bracket flange.

►Door should be positioned as close as possible to header, maintaining ability to rotate and clear bottom bar.

►Each end of door should be equal distance from header and curtain must be centered in the opening.

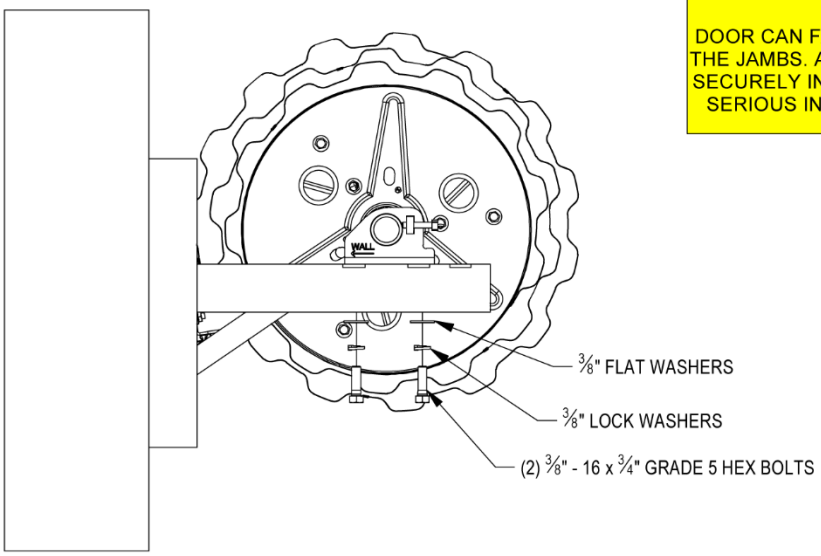

WARNING!
DOOR CAN FALL IF BOTH BRACKETS ARE NOT SECURELY FASTENED TO THE JAMBS. ALL FASTENERS ATTACHING BRACKETS TO JAMBS MUST FIT SECURELY INTO A STRUCTURAL MEMBER OR SURFACE. IF DOOR FALLS, SERIOUS INJURY OR DEATH AND/OR DAMAGE TO DOOR CAN RESULT.

FIGURE 13:
SECURING STAMPED AXLE SUPPORT TO BRACKETS

SADDLE PLACEMENT NOTE;
► **(6' to 8'-10" Tall Door, Use Back Slots)**

► **(Over 8'-10" Tall Door, Use Front Slots)**

STEP 10: PUSH UP STAMPED AXLE SUPPORT PLACEMENT

►Loosen set screw(s).

►Attach Stamped Axle Support to door bracket using two (2) each 3/8" - 16 x 3/4" grade 5 hex bolts, 3/8" lock washers and 3/8" flat washers. ***See Figure 14.***

►Tighten set screw(s) when in place.

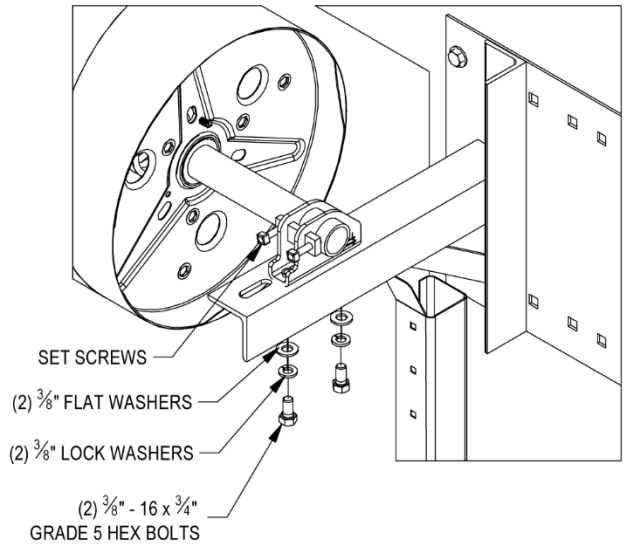

FIGURE 14:
SECURING SADDLE

CURTAIN REMOVED FROM ILLUSTRATION

STEP 11: REDUCED HAND CHAIN DRIVE END (IF REQUIRED)

►Loosen set screws in Stamped Axle Support.

►Attach Stamped Axle Support to door bracket using 3/8" - 16 x 3/4" grade 5 hex bolt, 3/8" lock washer and 3/8" flat washer.***See Figure 15.***

►Feed hand chain over chain pocket wheel and through chain hoist assembly. Connect ends of hand chain, being careful not to twist chain. Hand chain may be lengthened or shortened as necessary.

►Looen set screw in chain hoist assembly. Realign door sprocket & chain hoist sprocket then apply chain.

►Tighten set screws in chain hoist assembly after.

►Tighten 3/8" - 16 square head set screws in Stamped Axle Support when in place.

►Install hand chain keeper on wall or jamb.

***4:1 CHAIN HOIST SHOWN**

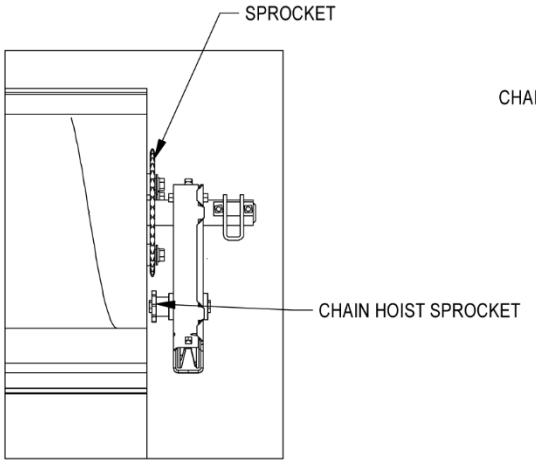

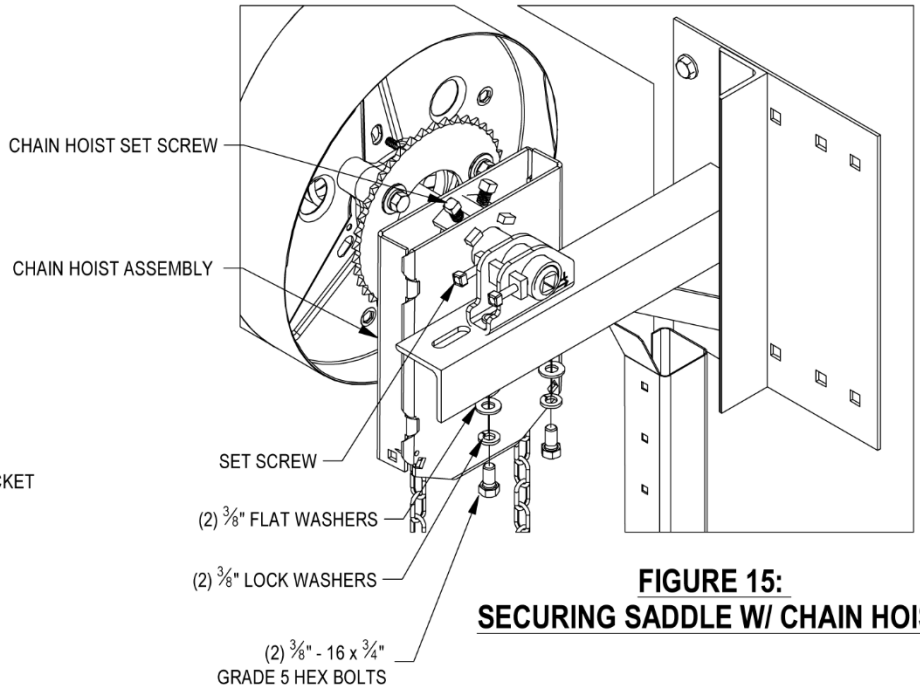

FIGURE 15:
SECURING SADDLE W/ CHAIN HOIST

STEP 12: ELECTRIC DRIVE END (IF REQUIRED)

►Loosen set screws in Stamped Axle Support.

►Attach Stamped Axle Support to door bracket using two (2) each 3/8" - 16 x 3/4" grade 5 hex bolts, 3/8" lock washers and 3/8" flat washers. ***See Figure 16.***

►Tighten 3/8" - 16 square head set screws when in place.

FIGURE 16:
ELECTRIC DRIVE END

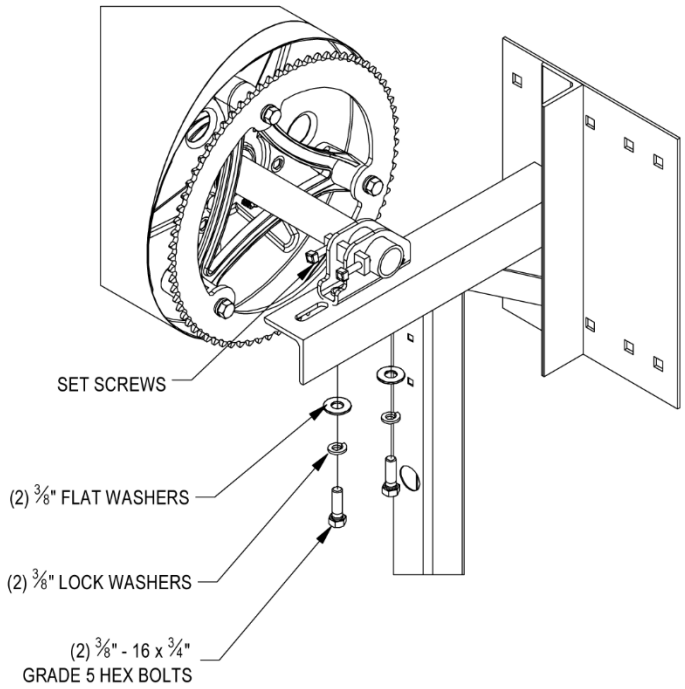

STEP 13: ATA OPERATOR END (IF REQUIRED)

►Secure ATA Operator/door assembly with flange hex nuts provided with operator.

FIGURE 17:
ATA OPERATOR END

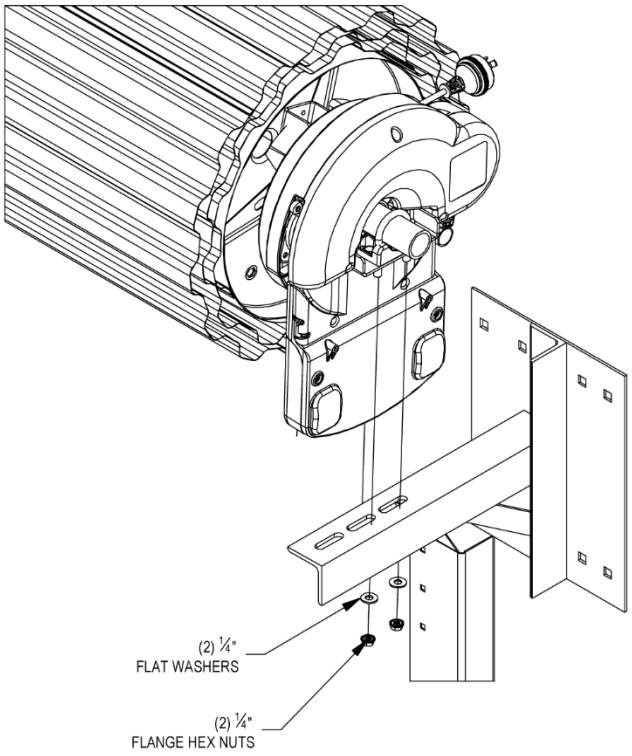

STEP 14: GUIDES TO JAMB

► The guides should be positioned centered of the opening and spaced curtain width + 3/4" apart, measured from back of guide to back of guide. Both guides must be plumb and level.

► Once both guides have been correctly positioned, attach to jambs using the appropriate fasteners, ***See Table C***, at each hole location.

TABLE C: WALL FASTENERS FOR JAMB ATTACHEMENT OF BRACKETS & GUIDES			
ITEM	**JAMB**	**FASTENERS**	**DRILL SIZE**
GUIDES	STEEL	1/4" - 14 X 1" TEKS SCREW	-
GUIDES	CONCRETE / FILLED BLOCK	5/16" X 2-1/4" TAPCON XL	1/4"
GUIDES	WOOD	1/4 X 2" LAG SCREW	-

WARNING!

DOOR CAN FALL IF BOTH BRACKETS ARE NOT SECURELY FASTENED TO THE JAMBS. ALL FASTENERS ATTACHING BRACKETS TO JAMBS MUST FIT SECURELY INTO A STRUCTURAL MEMBER OR SURFACE. IF DOOR FALLS, SERIOUS INJURY OR DEATH AND/OR DAMAGE TO DOOR CAN RESULT.

NOTE:

DOOR ASSEMBLIES ARE MANUFACTURED PER OPENING WIDTHS AND HEIGHTS SPECIFIED AT TIME OF ORDER. WILL NOT ASSUME RESPONSIBILITY FOR OPENING WIDTHS OR HEIGHTS THAT DO NOT MATCH THOSE SPECIFIED AT TIME OF ORDER.

GUIDE MOUNTINGS ARE DICTATED BY APPLICATION AND JAMB TYPE.

See Pages 14 for appropriate mounting.

► **STEEL JAMBS:** 1/4" - 14 X 1". TEKS SCREW. ***SEE PAGES 14.***

► **MASONRY JAMBS:** 5/16" X 2-1/4" TAPCON XL. ***SEE PAGES 14.***

► **WOOD JAMBS:** 1/4" X 2" LAG SCREW. ***SEE PAGES 14.***

STEP 15: INSTALLING GUIDES
GUIDE MOUNTINGS ARE DICTATED BY APPLICATION AND JAMB TYPE

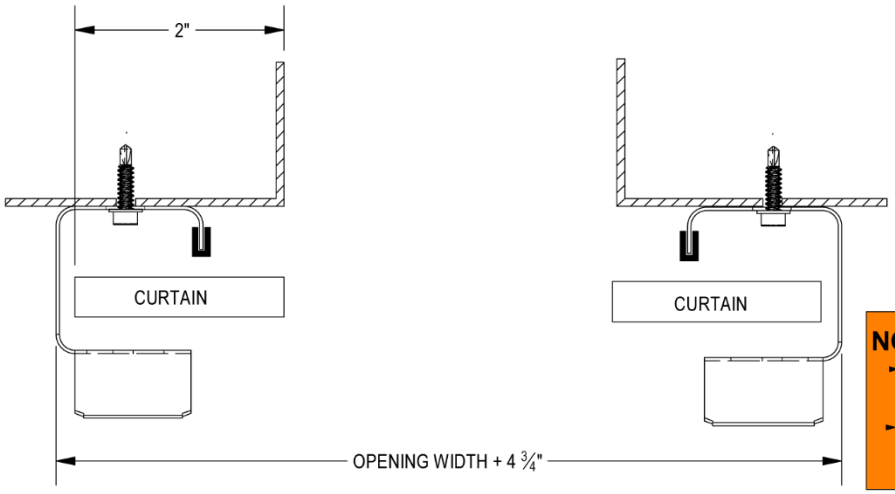

NOTES:
- INSTALL GUIDES AND BRACKETS WITH FASTENERS SUPPLIED.
- INSTALL GUIDES PER MOUNTING OPTION DETAIL THAT APPLIES TO SPECIFIC INSTALLATION APPLICATIONS

FIGURE 18: STEEL JAMBS

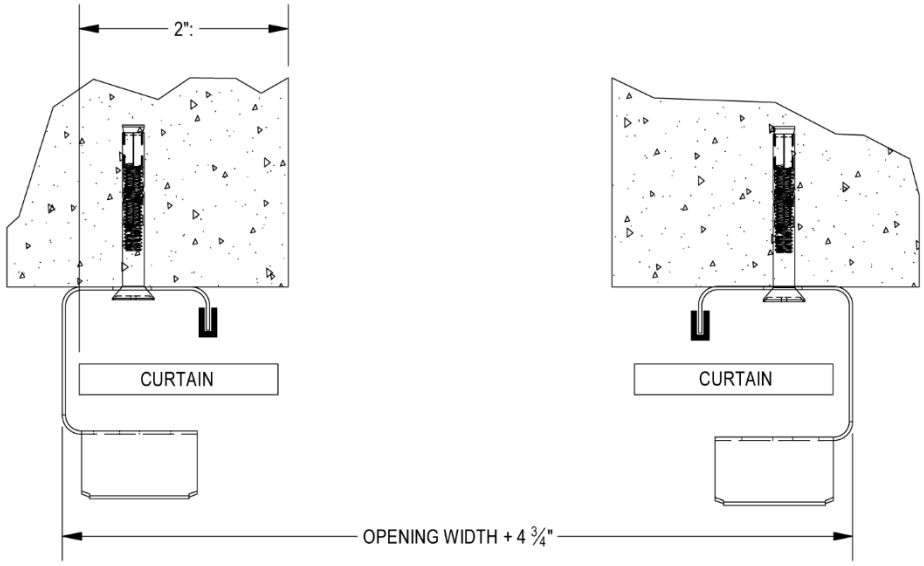

FIGURE 19: CONCRETE / MASONRY JAMBS

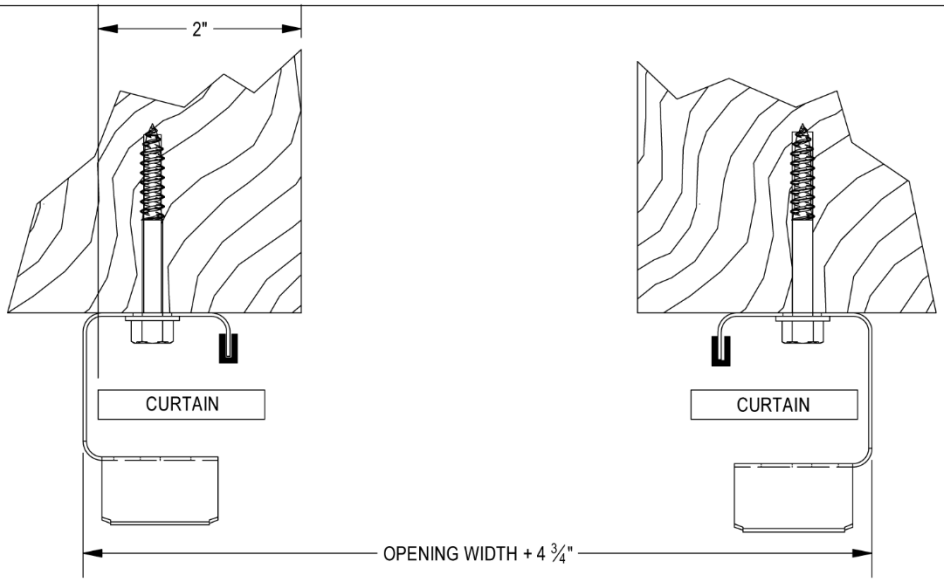

FIGURE 20: WOOD JAMBS

STEP 16: POSITION DOOR

►At both ends of door, slightly loosen the 3/8" - 16 x 3/4" hex bolts that fasten the saddle.

►Push door assembly toward header leaving room for door to rotate freely. Each end of door to be an equal distance from the header. Curtain is to be centered in opening.

►Tighten all 3/8" - 16 x 3/4" hex head bolts loosened in above step.

►Tighten all 3/8" -16 square head set screws in Stamped Axle Support at both ends of door.

WARNING!
ENSURE THAT SET SCREWS OF SADDLE ARE ADEQUATELY TIGHTENED SECURING AXLE IN PREPARATION FOR ADDING TENSION

STEP 17: SETTING INITIAL SPRING TENSION

►Rotate door two (2) revolutions in the direction that would send the bottom bar down through the guides.

►While firmly holding the door at the bottom bar, cut the tape and plastic wrap that holds the door in a coil. Direct the bottom bar down into the guides, stopping just past the head stop area.

WARNING!
ENSURE THAT ASTRAGAL IS NOT CUT DURING TAPE AND PLASTIC REMOVAL.

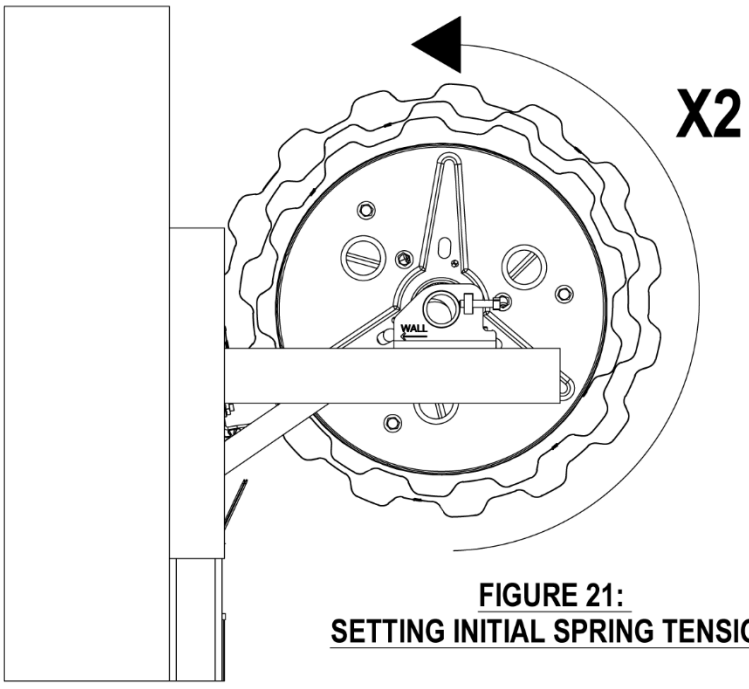

FIGURE 21:
SETTING INITIAL SPRING TENSION

WARNING!
EXTREME SPRING TENSION CAN CAUSE SERIOUS INJURY OR DEATH. INSTALLATION, REPAIRS AND ADJUSTMENTS MUST BE MADE BY A TRAINED ROLLING SERVICE DOOR SYSTEMS TECHNICIAN USING PROPER TOOLS AND INSTRUCTIONS. DOOR MUST BE FULLY OPEN WHEN MAKING ADJUSTMENTS.

STEP 18: HEADSTOPS

►Slide (2) 1/4 x 3/4" carriage bolts from the inside of each guide into headstop punch. ***See Figure 22.***

►Secure each headstop to guide with a 1/4" hex nut.

FIGURE 22: HEADSTOPS

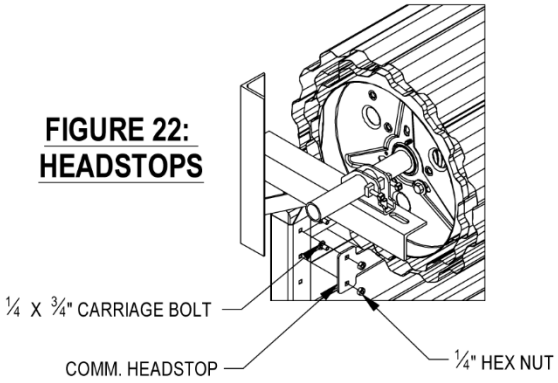

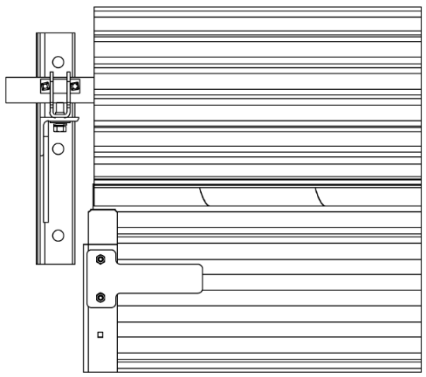

FIGURE 23: HEADSTOPS

STEP 19: SLIDELOCK, STEP PLATE & PULL ROPE

►Transfer the 1/4" - 20 x1/2" carriage bolts and 1/4"- 20 serrated flange hex nut that were removed from both end of bottom bar to the two holes at the center of the bottom bar and angle.

►For manually operated doors, lower bottom bar and install slide lock and step plate using (2) 1/4" - 20 x 1" hex bolts, (2) 5/16" - 18 hex nuts, (2) 1/4" flat washers and (2) 1/4" - 20 nylon insert hex nuts. Do this at both ends of bottom bar. ***See Figure 24.***

►*For electrically operated doors, lower bottom bar and install step plate using (2) 1/4" - 20 x 1/2" carriage bolts & (2) 1/4" - 20 serrated flange hex nuts. ***See Figure 24.*** **(OMIT SLIDE LOCK)**

►For push-up operated doors only, install rope in one of the holes at the center of the horizontal leg of the bottom bar angle.

FIGURE 24: SLIDELOCK & STEP PLATE (MANUAL OPERATION)

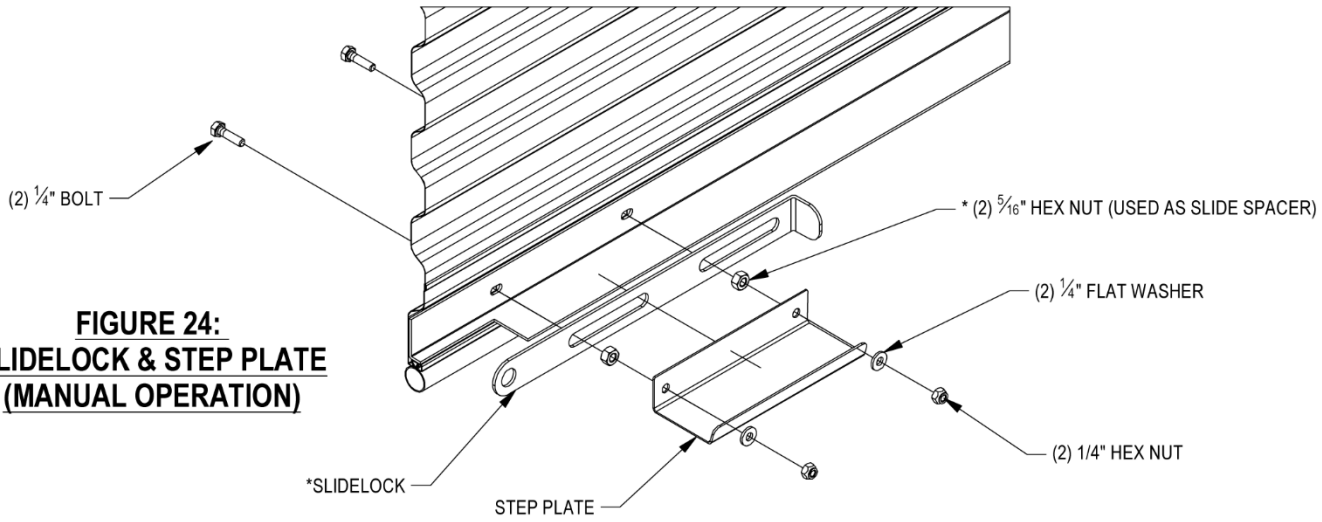

NOTE:
BEFORE CYCLING DOOR TO TEST DOOR OPERATION, ENSURE THAT ALL FASTENERS AND SET SCREWS ARE TIGHTENED AND SECURING ALL COMPONENTS.

STEP 20: CHECK MANUAL DOOR OPERATION

►Cycle door by raising and lowering door to its fully closed and fully opened position.

►Evaluate spring tension. If adjustments to spring tension are required, ***Proceed to Step 21.***

►Set limits of electrically operated doors at this time.

► Refer to specific operator instructions for setting limits.

WARNING!
TWO PEOPLE REQUIRED TO ADJUST DOOR TENSION SAFELY.

STEP 21: ADJUST SPRING TENSION (IF REQUIRED)

- ► If door closes easily but is hard to open then more tension is required.
- ► If door is hard to close but easy to open then less tension is required.
- ► Each person should firmly place a large tensioning device on the axle. Loosen the set screws on the axle supports and the pocket wheel reduction drive if applicable.
- ► Pull down on tensioning device to increase tension or push up on tensioning device to decrease tension.
- ► Tighten set screws on axle supports and the pocket wheel reduction drive if applicable.
- ► Test door and repeat the above steps as necessary

WARNING!
EXTREME SPRING TENSION CAN CAUSE SERIOUS INJURY OR DEATH. INSTALLATION, REPAIRS AND ADJUSTMENTS MUST BE MADE BY A TRAINED ROLLING SERVICE DOOR SYSTEMS TECHNICIAN USING PROPER TOOLS AND INSTRUCTIONS. DOOR MUST BE FULLY OPEN WHEN MAKING ADJUSTMENTS.

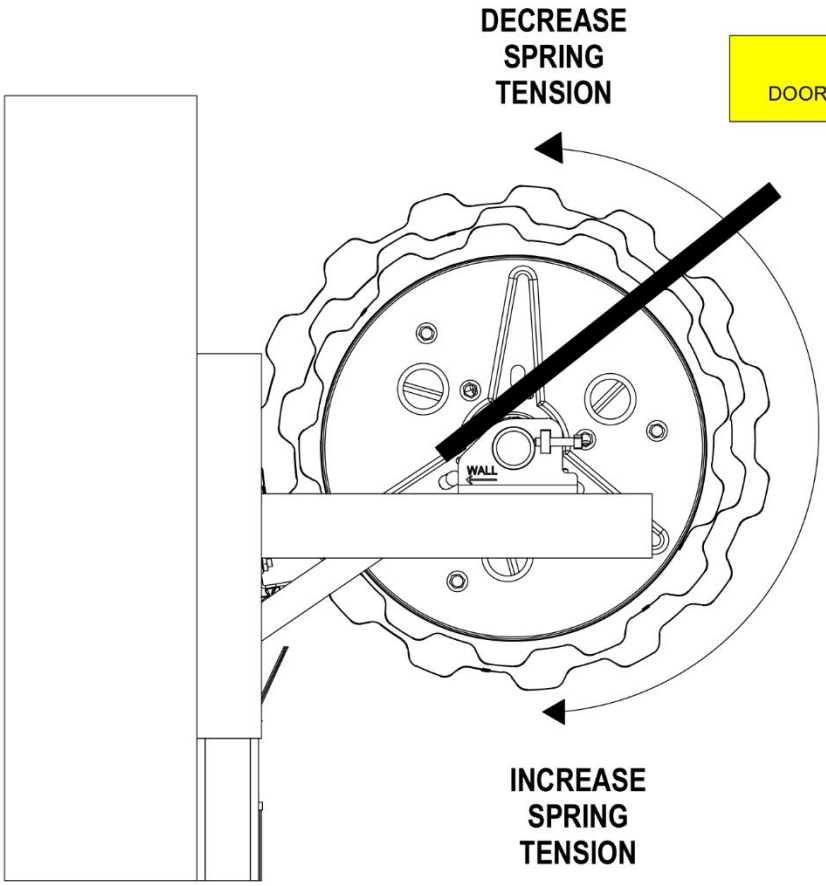

WARNING!
DOOR MUST BE FULLY OPENED WHEN MAKING ADJUSTMENTS.

FIGURE 25:
ADJUST SPRING TENSION

STEP 22: PRODUCT SAFETY LABELS

- ► Install RDD-201 on bracket. (page 18)
- ► Visual ✓ for RDD-204 on bottom bar. (page 18)
- ► Install RDD-202 door drive side, guide or jamb. (page 18)

PRODUCT SAFETY LABELS



RDD-202 Rolling Door Safety Label

RDD-201 Tension Safety Label



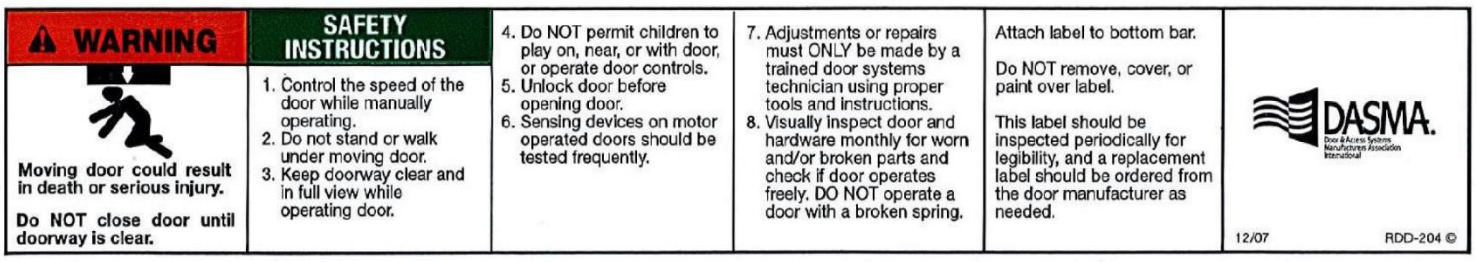

RDD-204 Rolling Door Bottom Bar Label

►requires the following product saftey/labels to be in place and/or installed to fully complete installation.

►Any case where product safety labels are missing or damaged, contact immediately to obtain replacements.

8:1 CHAIN HOIST (IF REQUIRED)

► Attach Support Spacer, and Sprocket to Drum using (6) 3⁄8" flat washers, (3) 3⁄8-16 x 3-1⁄2" hex bolt and 3⁄8" lock washers

► Slide reduced drive assembly over axle and align sprockets.

► Slide the Stamped Axle Support onto axle.

►Tighten 3/8" - 16 square head set screws when in place. ***See Figure 26.***

FIGURE 26:
CHAIN HOIST 8:1

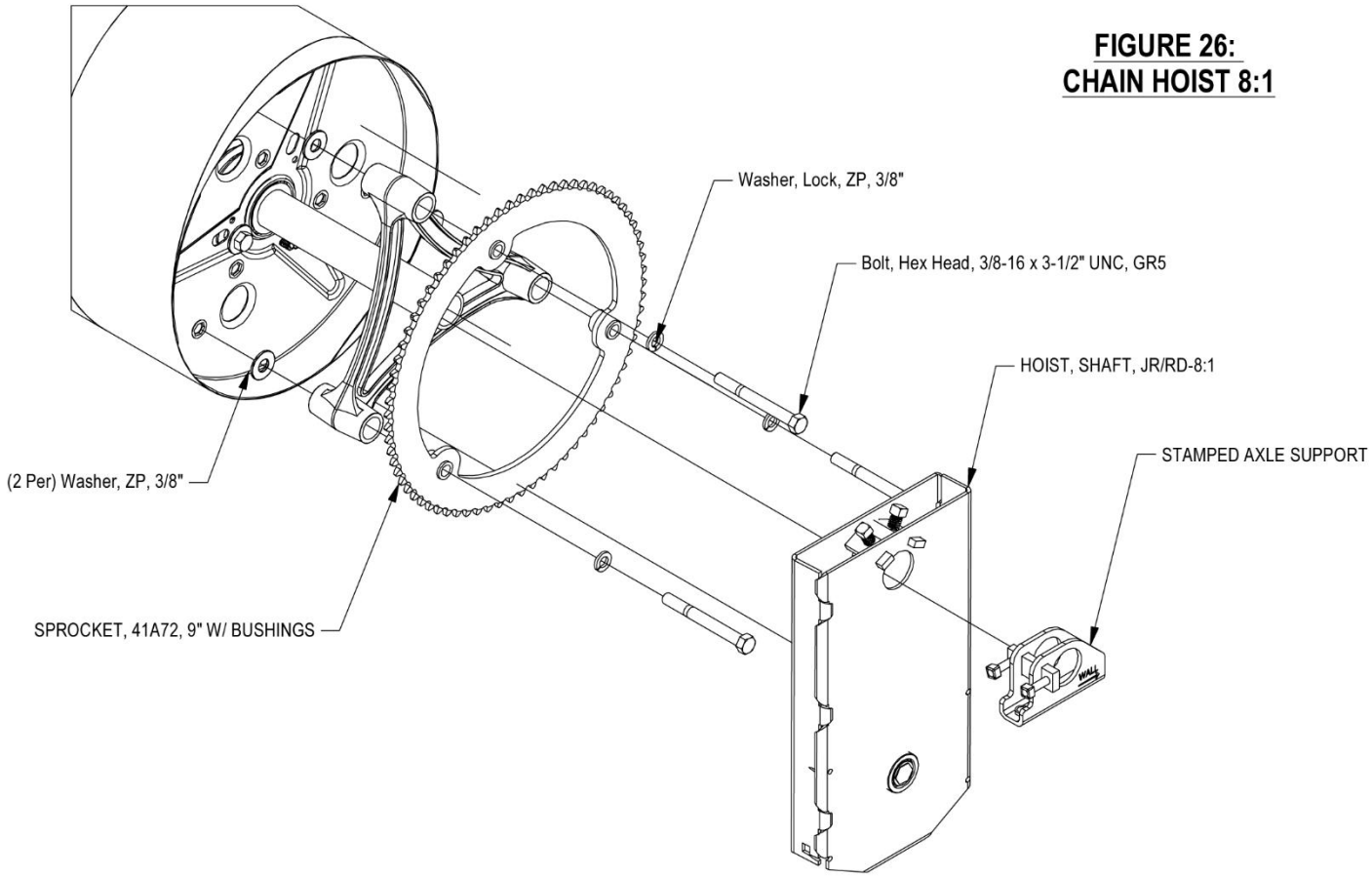

Operation and Maintenance Manual

The following manual is provided to evaluate the operational performance and future maintenance of Janus International Rolling Sheet door product line. mandates rolling sheet door product installation by trained rolling door technicians and future maintenance by experienced/qualified personnel. Specific parts, components, assemblies, etc. that are determined to be defective, worn, or unsafe by performance evaluations or preventative maintenance programs must result in rolling sheet door assembly taken out of service. All repairs, part replacements or adjustments must be made by trained rolling door technicians to place rolling sheet door assembly back into service. It is **MANDATORY that all** door technicians and other technicians, installers and future maintenance staff comply fully with all safety information, procedures, and instructions contained in this manual. **Failure to do so could result in premature part/component failure resulting in serious injury or death to others** and, with respect to door technicians, immediate termination of employment

Adjustments, part replacement, repairs, etc. must be performed by trained rolling door technician

ROLLING SHEET DOOR PERFORMANCE EVALUATION

- Rolling Door operation should be easy at/near the open and closed positions. Rolling Door may require more effort to open through the middle portion of travel.
- Rolling Door operation to the open position should result in bottom bar angle resting against head stops and remain in the open position.
- Rolling Door operation should not exceed 35lb. of force for hand chain operation, and 30 lb. for manual operation.
- Rolling Door operational balance evaluation:
  If door operation is easy to close, but hard to open; spring tension needs to be increased
  If door operation is hard to close, but easy to open; spring tension needs to be decreased
  Spring tension adjustments must be made by trained rolling door technician. Refer to Rolling Door installation instructions for tension adjustment procedure.

▲ WARNING: Extreme spring tension can cause serious injury or death ▲

- Rolling Door electrical motor operation should be evaluated quarterly.
- Prior to Rolling Door electrical motor operation assure that doorway is clear and in full view before and during complete operation cycle.
- UL 325 requires constant pressure to close for doors without sensing edges or photoelectric sensors/eyes.
- Sensing devices should be tested at least weekly. Sensing edges should be tested at both ends to evaluate proper operation. Photoelectric eyes must be tested by breaking beam to evaluate proper operation.
- Evaluate operator limit setting at door travel open and closed positions. If operator limit setting has become out of sync with door open and close positions, refer to operator installation instructions to reset limits to an appropriate setting in relationship to door open and closed positions.
- If at any time during Rolling Door electrical motor operation, motor sounds like it is under excessive load or stress to open the door:
  - ▲ Close door using motor operator. Engage motors manual operation feature to manually operate the door to the open position.
  - ▲ If door operation is heavy, cannot be completely opened or hard to open and will not stay in open position; Spring Assembly counterbalance evaluation is required, which may require adjustment or replacement.
  - **▲ Spring tension adjustments or repairs must be made by trained rolling door technician. Refer to Rolling Door installation instructions for tension adjustment procedure.**
  - **▲ Determination of counterbalance repair must result in Rolling Door taken out of service until required repairs are complete.**

VISUAL INSPECTION

Guides:

- Guide fasteners must be present and secured in each existing hole/slot provided with fasteners supplied
- Guides must not be bent, crushed, or damaged in a way that binds the curtain and/or bottom bar assembly at any portion of travel.
- Head stops must be securely fastened in place at top of guide to prevent bottom bar from traveling out of the top of the guides when rolling door curtain is fully raised to the open position.
- Inspect guide wear strip (when provided) for excessive cracking, tearing, wear or absence.

Curtain:

- During rolling door operation, curtain and bottom bar assembly must move freely inside guides and not contact header or ceiling.
- Latches, Step Plates, Slidelocks, windlocks, etc. (when provided) must always be securely fastened to curtain assembly.
- **Windlocks should never be removed from curtain.**
- Inspect curtain wear material or felt tape (when provided) for excessive tearing, wear, or absence.
- Inspect weather seals; Top Draft Stop, side draft stop, brush (when provided)

Brackets/Mounting Plates:

- All Fasteners must be present and secured with fasteners detailed in installation instructions.
- Brackets & Mounting plates (when provided) must not be bent, or damaged in a way that adversely effects the safe operation of door assembly.

Hood Assembly:

- When provided, all fasteners attaching hood endcaps, hood support (when provided), and hood to wall must be secure.
- Hood endcaps or hood must not be bent or crushed in a manner which binds the curtain thus hindering the proper operation of rolling door operation.

Chain Hoist Gears:

- Fasteners attaching all chain hoist components, & gears must be securely fastened.
- Visually inspect gears for broken, cracked, missing or extremely worn teeth.
- Clear debris from gear teeth.

Sprockets and Roller Chain Drive:

▲Sprocket misalignment will result in excessive wear and could cause roller chain to jump off of sprocket during operation or lead to premature failure of roller chain assembly.▲

- Visually inspect sprocket alignment between Rolling Door sprocket and output sprocket of motor operator. Align sprockets and tighten set screws as needed.
- Inspect roller chain for excessive wear or damage.
- Roller Chain Lubrication: SAE 20 oil to be used for service temperatures between 32° F and 104° F. Apply oil where chain tension is minimal.
- Check fasteners and tighten as required.

Tensioning Devices & Axle Supports:

- Fasteners attaching all tensioning devices and axle supports must be securely fastened.
- Set screws securing axle must be securely fastened.
- Inspect for components for damage or deformity.

▲Determination of tensioning device repair or replacement must result in Rolling Door taken out of service until required repairs are complete. Repair or replacement must be performed by trained rolling door technician▲

▲Product safety labels should be periodically inspected and cleaned by the product user as necessary to maintain good legibility for safe viewing distance

Product safety labels should be replaced by the product user when they no longer meet the legibility requirements for safe viewing distance. In any case where products have an extensive expected life or where exposed to extreme conditions, the product user should immediately contact to obtain replacements.