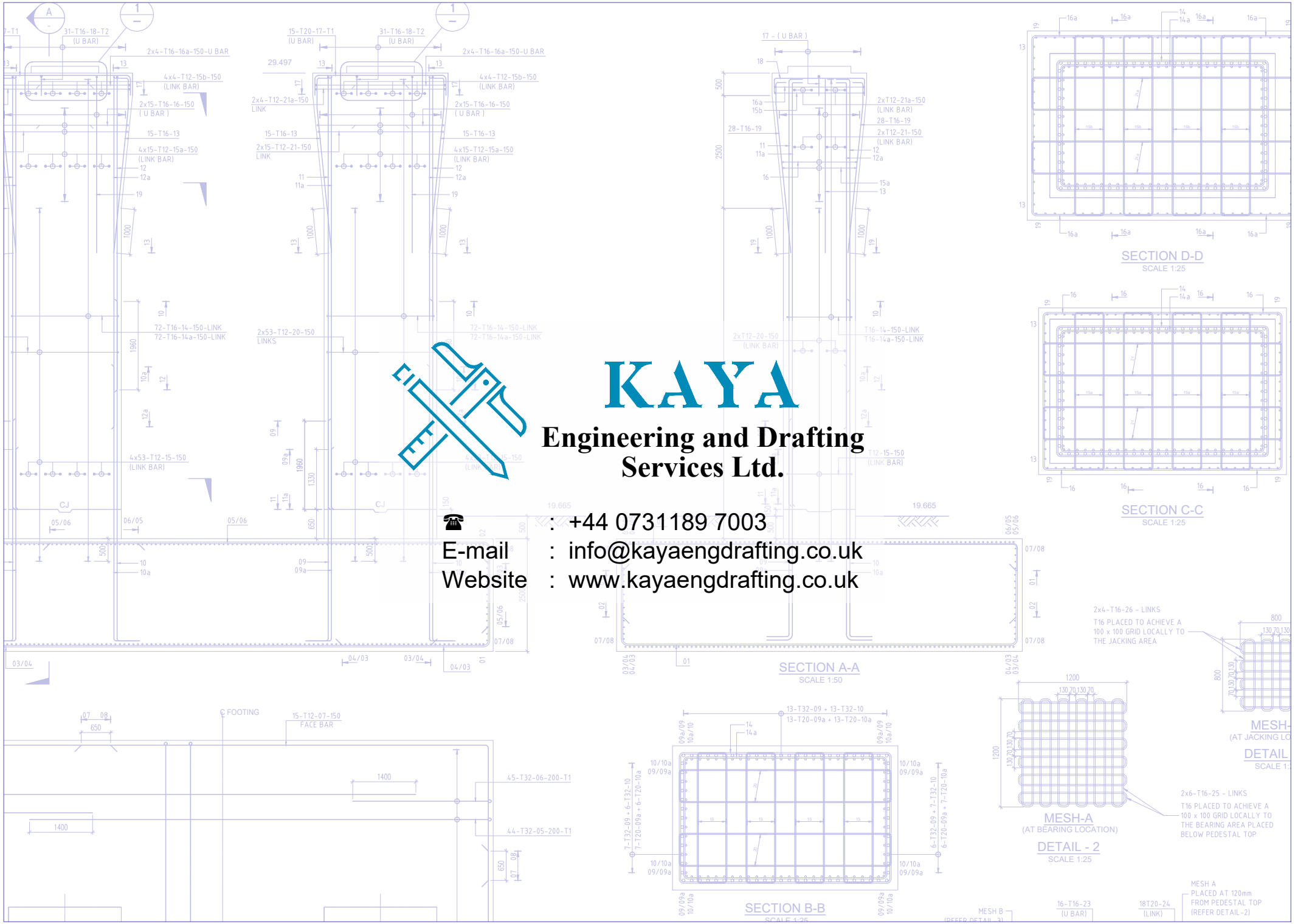

KAYA

Engineering and Drafting Services Ltd.

☎ : +44 0731189 7003

E-mail : info@kayaengdrafting.co.uk

Website : www.kayaengdrafting.co.uk

ABOUT US:

Kaya Engineering and Drafting Services Ltd. was founded in 2019 by Mr. Murat Kaya, a civil engineer, and Mrs. Sule Yuksel Kazanci Kaya, a senior CAD technician, both with years of experience on design and drafting in the civil construction field.

They both spent their last 12 years working on some of the Qatar's major highway projects and developed strong technical skills and extensive knowledge on design and construction of highway structures, road works, infrastructure works, traffic diversions and almost on all the highway related construction works.

The company's aim is to provide high quality engineering and drafting services that reflects the owners experience, knowledge and skills to UK based or international design and construction companies with reasonable and competitive prices and to satisfy the client's needs with cost effective, value added, high quality services.

OUR SERVICES:

Kaya Engineering and Drafting Services Ltd. offers the following services:

Structural engineering and drafting services:

We offer our services for structures such as:

- Highway bridge decks, piers, abutments, approach slabs
- Underpass and braiding structures
- Reinforced concrete box and pipe culverts, wing walls
- Mechanically Stabilized Earth (MSE) walls
- Reinforced concrete retaining walls
- Overhead and ground mounted directional signs structural details
- Waterline and TSE valve chambers (Precast or cast in-situ)
- All type of residential buildings
- Commercial buildings such as factories and malls.

Our structural drafting service includes:

- General arrangement layouts, foundation setting out plans, elevation and sections
- Static calculation of steel or reinforced concrete buildings
- Structural floor plans, elevation and section details, column and beam schedules
- Structural rebar detailing with clear and accurate annotations
- Bar Bending Schedules complying with BS 8666:2005 or required standards.
- Connection details for steel buildings

Highway, Urban and Rural road works drafting services:

Our drafting service includes:

- Road layouts (with Google Earth imported imagery option)
- Horizontal and vertical alignment details
- Setting out plans and details
- Typical and detailed cross sections
- Standard Traffic Signs and Road Marking layouts
- Advance Directional Signs (Overhead and Ground Mounted) layouts
- At grade kerbs and safety barriers layout and typical details

Infrastructure works drafting services:

Our drafting service includes:

- Wet utilities such as storm water, potable water, treated sewage effluent (TSE), foul sewer networks layouts, profiles and typical sections
- Thrust blocks layouts, sections and reinforcement detailing
- Dry utilities such as Electrical (HV, MV, LV) network, street lighting, telecom, Intelligent Transport Systems (ITS) layouts and typical sections
- Utility corridor layouts showing superimposed utilities within their corridors.
- Utility corridor typical and detailed sections.
- Road crossing ducts layouts, setting out details and sections.
- Chamber and precast manhole schedules and reinforcement details.

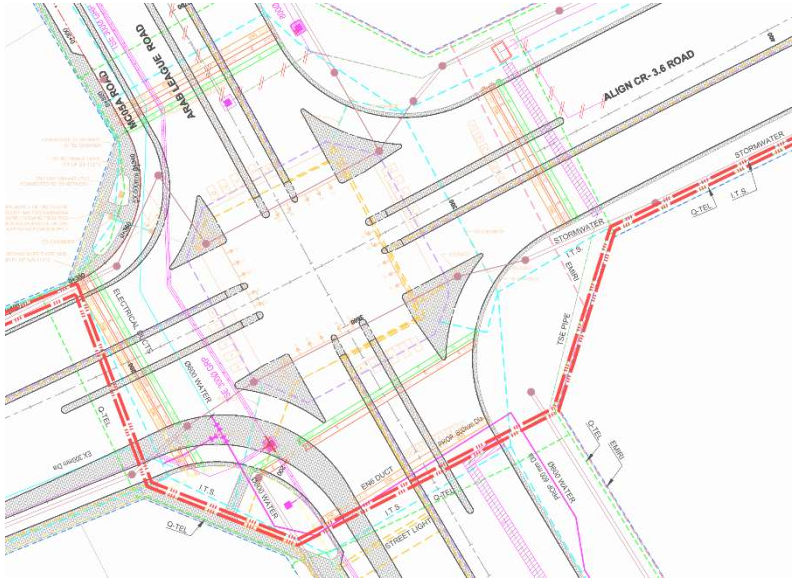

Building Information Modelling services:

- Residential buildings and highway structures 3D modelling
- Dimension and detail layouts, elevations and sections based on 3D structural model
- Reinforcement detailing with 3D views for a better understanding of rebar installation
- Bar bending schedules

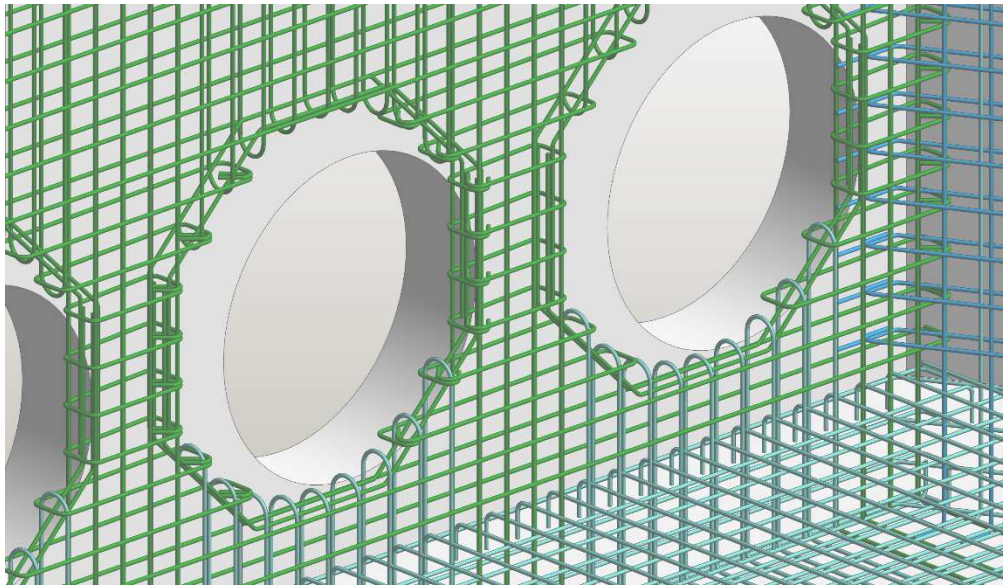

Document conversion services:

Our document conversion service includes:

- Hardcopy (paper) to CAD conversion
- PDF to CAD conversion
- CAD to PDF conversion
- Google Earth to CAD background satellite imagery import
- Export 2D/3D Drawings to Google Earth (KML/KMZ)

SAMPLE DRAWINGS

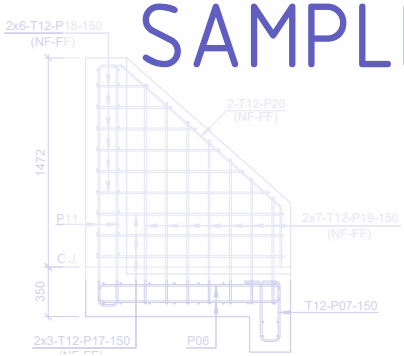

NO.OF BARS IN EACH	TOTAL NO	LENGHT OF BAR (mm)	SHAPE	SHAPE CODE	A (mm)	B (mm)	C (mm)	D (mm)	E (mm)	r (mm)
				Total length from previous page						
31	62	2800		21	430	2000	430	–	–	32
[illegible]	[illegible]	[illegible]		[illegible]	[illegible]	[illegible]	300	350	–	32
[illegible]	[illegible]	[illegible]		[illegible]	[illegible]	[illegible]	130	130	–	24
30	60	6225		51	2430 ~ 2850	370	130	130	–	24
8	16	6650		51	2860	370	130	130	–	24
16	32	6250		44	300	2100	1560	2100	300	32
16	32	6350		44	300	2100	1660	2100	300	32
18	36	6925		51	1700	1600	190	190	–	70
12	24	2925		51	1200	130	130	130	–	32
16	32	2125		51	800	130	130	130	–	32

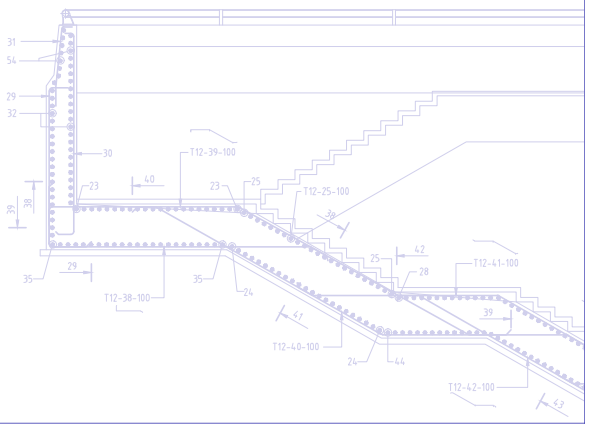

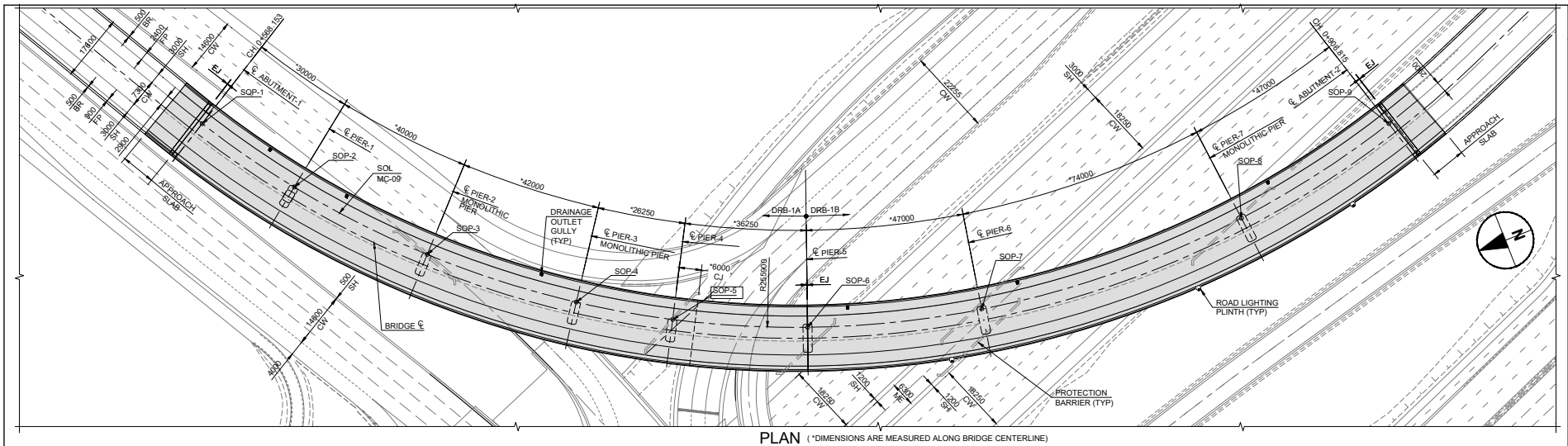

PLAN

(* DIMENSIONS ARE MEASURED ALONG BRIDGE CENTERLINE)

SCALE 1:600 (A1),1:1200 (A3)

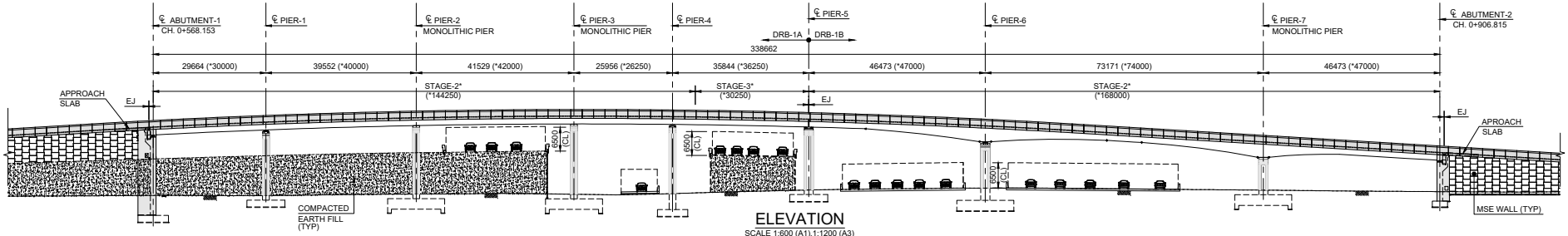

ELEVATION

SCALE 1:600 (A1),1:1200 (A3)

DIMENSIONS ARE MEASURED ALONG SETTING OUT LINE

* DIMENSIONS ARE MEASURED ALONG BRIDGE CENTERLINE

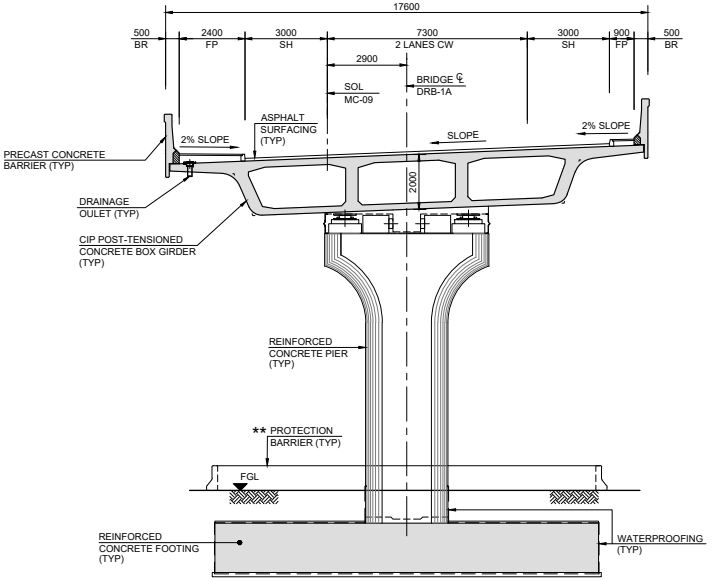

TYPICAL CROSS SECTION (DRB-1A)

SCALE 1:100 (A1),1:200 (A3)

SETTING OUT DATA

SETTING OUT POINT MC-09	EASTING	NORTHING	FINISHED ROAD LEVEL (FRL)	CHAINAGE
SOP1	223504.089	401344.914	33.939	0+568.153
SOP2	223480.416	401327.067	35.262	0+597.817
SOP3	223452.360	401229.244	36.403	0+637.369
SOP4	223427.882	401265.751	36.836	0+678.898
SOP5	223415.460	401242.974	36.708	0+704.854
SOP6	223402.225	401209.695	36.028	0+740.698
SOP7	223392.202	401164.380	34.278	0+787.171
SOP8	223393.374	401091.468	30.040	0+860.342
SOP9	223404.850	401046.500	27.252	0+906.815

Highway Bridge General Arrangement

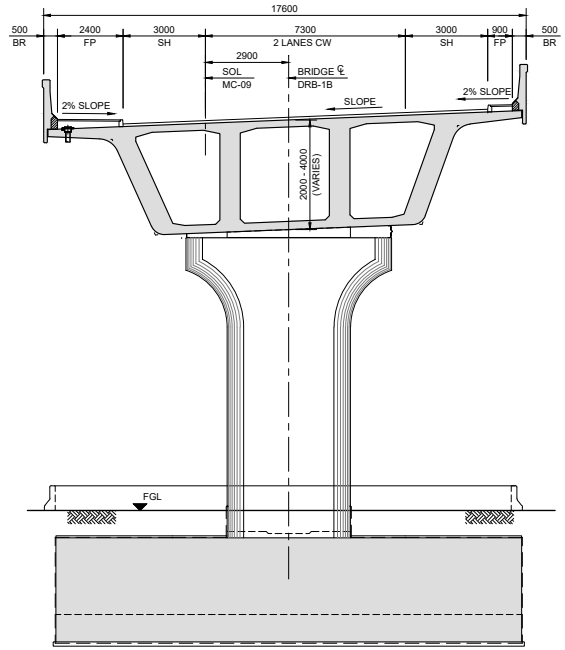

TYPICAL CROSS SECTION (DRB-1B)

SCALE 1:100 (A1),1:200 (A3)

LEGEND

CW	CARRIAGEWAY
SH	SHOULDER
ME	MEDIAN
FP	FOOTPATH
BR	BARRIER
BP	BICYCLE PATH
EJ	EXPANSION JOINT
CJ	CONSTRUCTION JOINT
FU	FUTURE EXPANSION
CL	MINIMUM CLEARANCE
CIP	CAST-IN-PLACE
SOL	SETTING OUT LINE
FGL	FINISHED GROUND LEVEL
CH	CHAINAGE
℄	CENTER LINE
TYP	TYPICAL

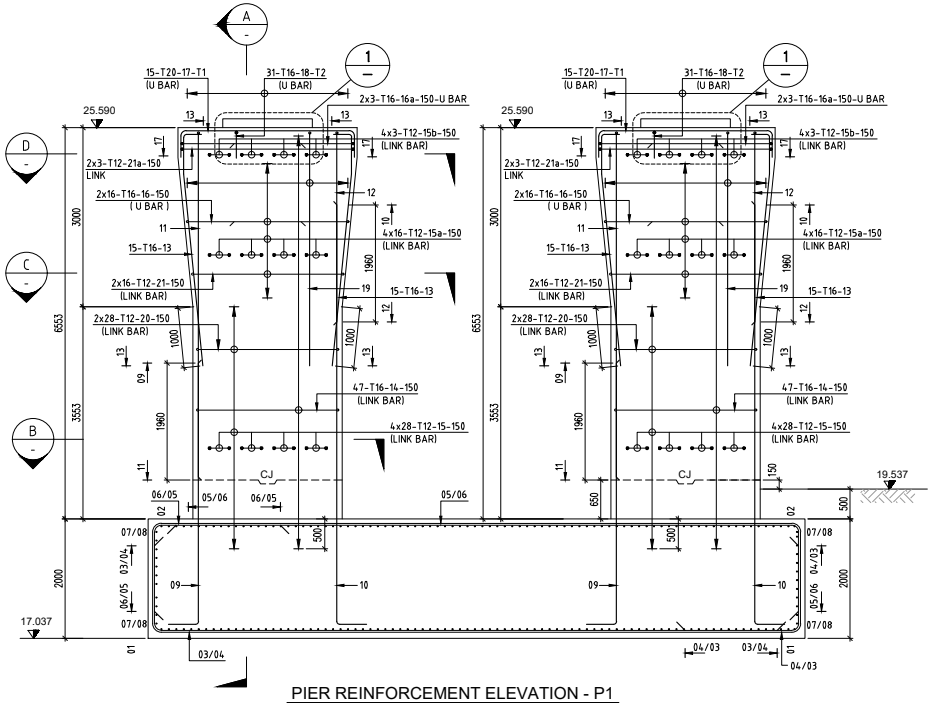

PIER REINFORCEMENT ELEVATION - P1

SCALE 1:50

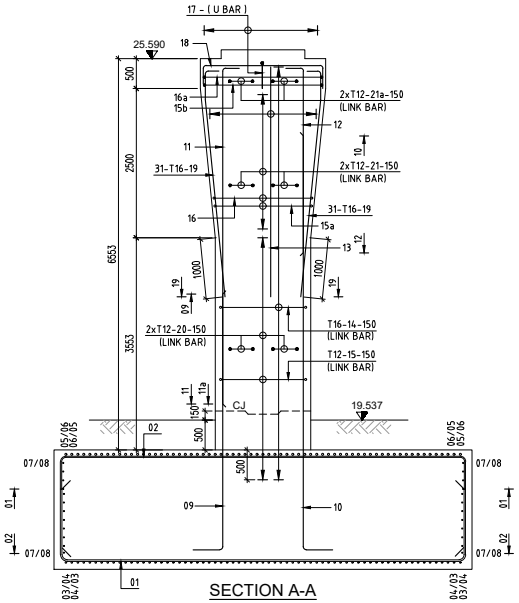

SECTION A-A

SCALE 1:50

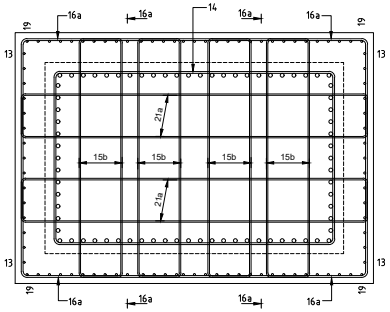

SECTION D-D

SCALE 1:25

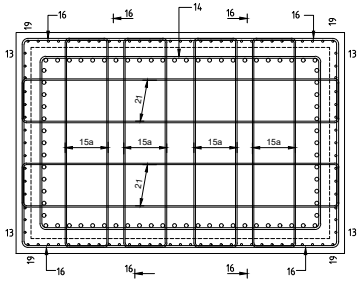

SECTION C-C

SCALE 1:25

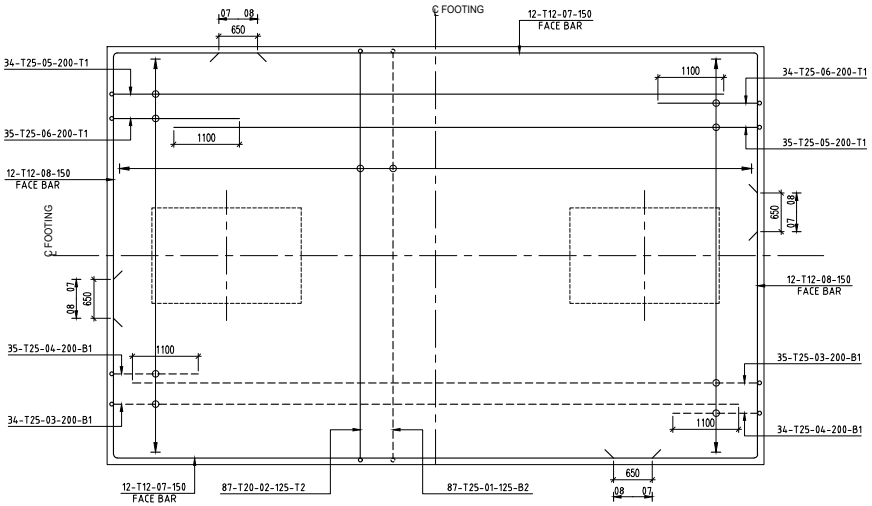

FOUNDATION REINFORCEMENT PLAN - P1

SCALE 1:50

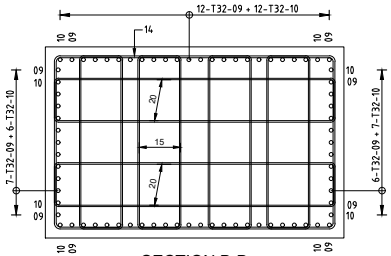

SECTION B-B

SCALE 1:25

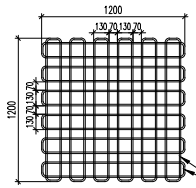

MESH-A

(AT BEARING LOCATION)

DETAIL - 2

SCALE 1:25

2x6-T12-25 - LINKS

T12 PLACED TO ACHIEVE A 100 x 100 GRID LOCALLY TO THE BEARING AREA PLACED BELOW PEDESTAL TOP

2x4-T12-26 - LINKS

T12 PLACED TO ACHIEVE A 100 x 100 GRID LOCALLY TO THE JACKING AREA

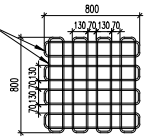

MESH-B

(AT JACKING LOCATION)

DETAIL - 3

SCALE 1:25

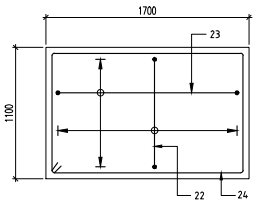

SECTION E-E

SCALE 1:25

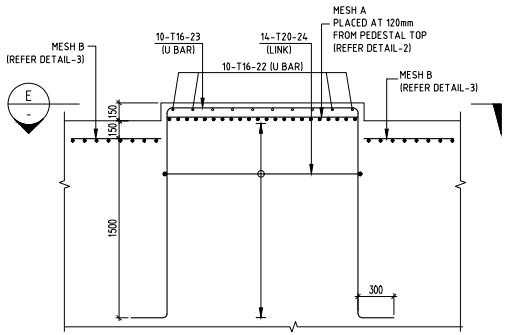

DETAIL - 1

SCALE 1:25

NOTE:- PIERCAP REINFORCEMENT NOT SHOWN FOR CLARITY

Highway Bridge-Pier Reinforcement Details

* EPOXY COATED
** EPOXY COATED (S/S) REINFORCEMENT AS PER EXPANSION JOINT MANUFACTURER'S SPECIFICATION

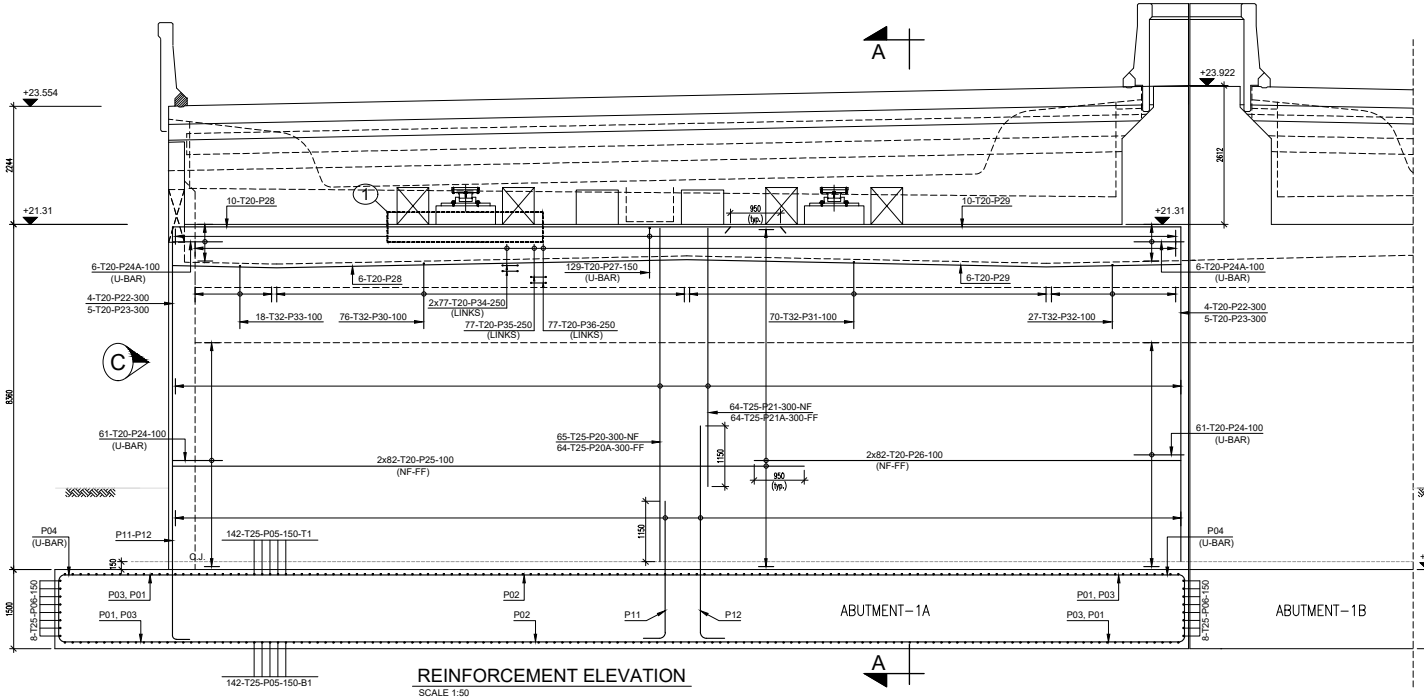

REINFORCEMENT ELEVATION
SCALE 1:50

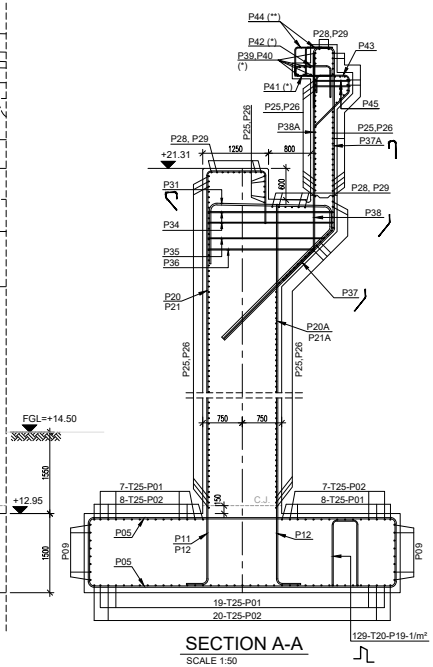

SECTION A-A
SCALE 1:50

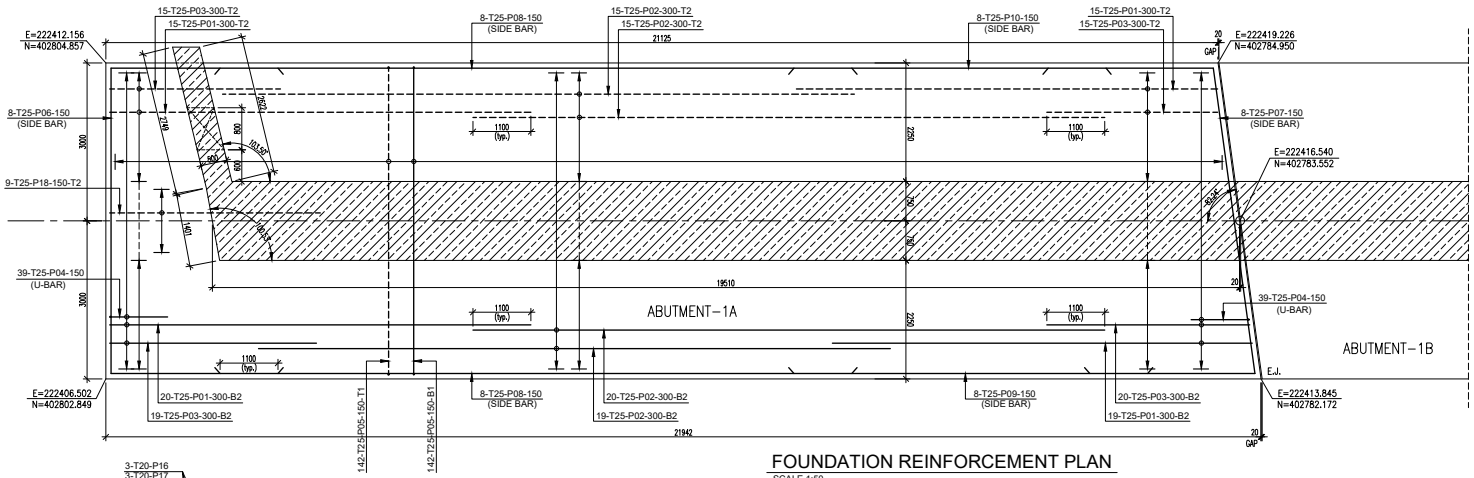

FOUNDATION REINFORCEMENT PLAN
SCALE 1:50

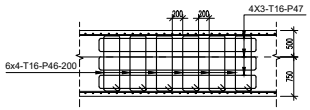

DETAIL-1 PLAN (2 No's)
SCALE:1/50

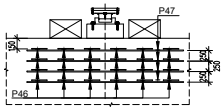

DETAIL-1
SCALE:1/50

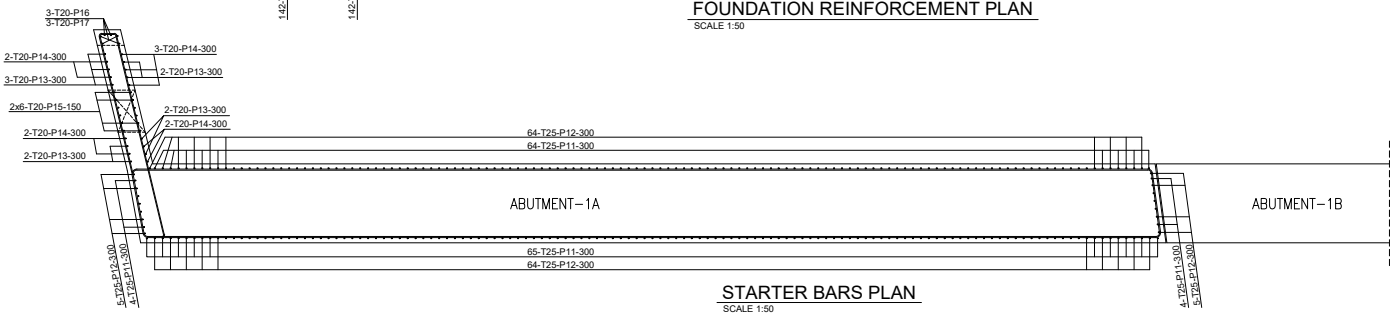

STARTER BARS PLAN
SCALE 1:50

Highway Bridge-Abutment Reinforcement Details

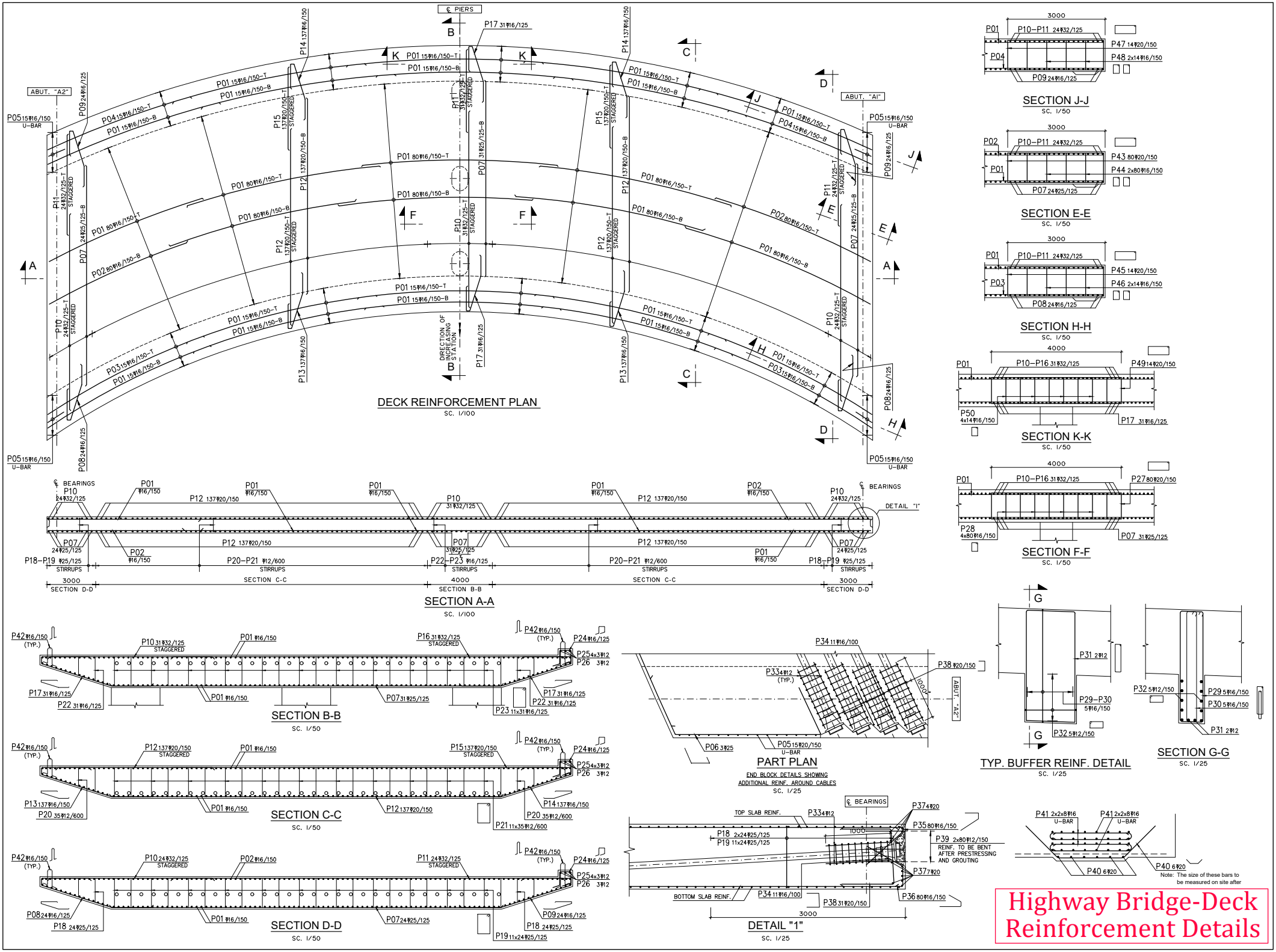
DECK REINFORCEMENT PLAN
SC. 1/100
SECTION A-A
SC. 1/100
SECTION B-B
SC. 1/50
SECTION C-C
SC. 1/50
SECTION D-D
SC. 1/50
SECTION J-J
SC. 1/50
SECTION E-E
SC. 1/50
SECTION H-H
SC. 1/50
SECTION K-K
SC. 1/50
SECTION F-F
SC. 1/50
PART PLAN
END BLOCK DETAILS SHOWING ADDITIONAL REINF. AROUND CABLES
SC. 1/25
DETAIL "1"
SC. 1/25
TYP. BUFFER REINF. DETAIL
SC. 1/25
SECTION G-G
SC. 1/25
Highway Bridge-Deck Reinforcement Details

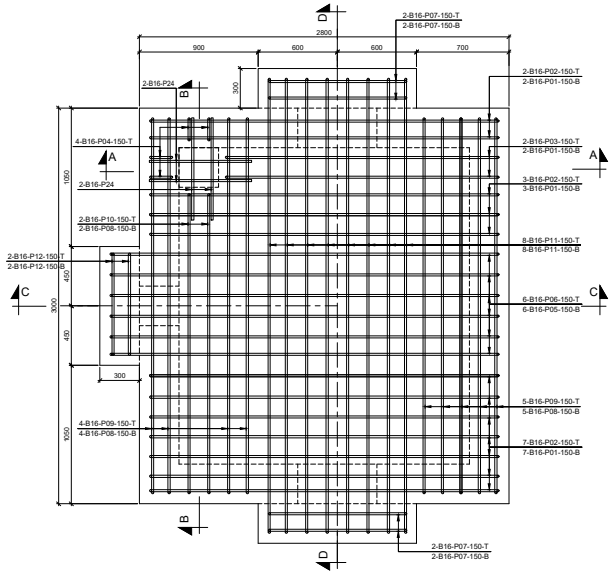

BASE REINFORCEMENT PLAN

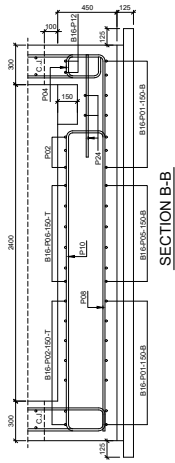

SECTION B-B

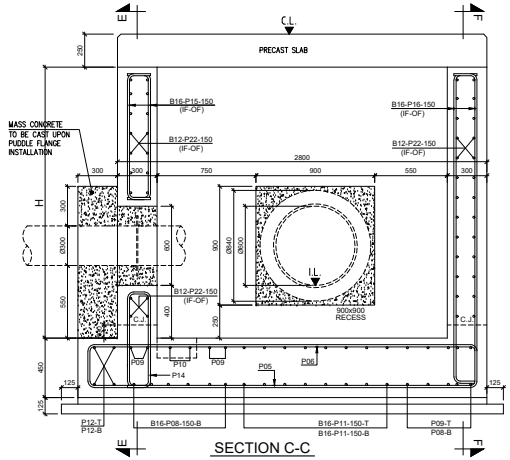

SECTION C-C

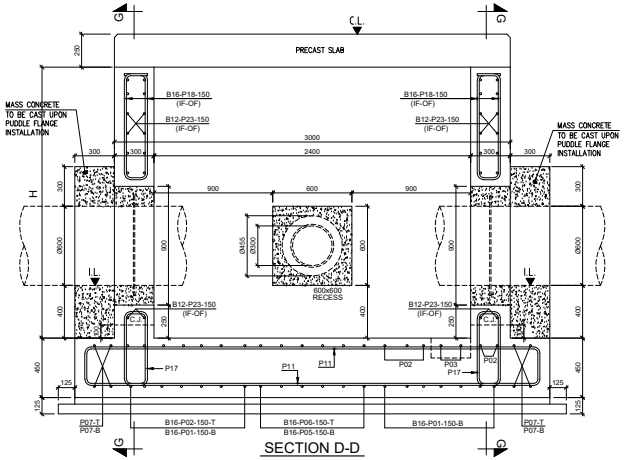

SECTION D-D

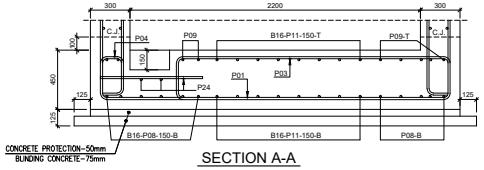

SECTION A-A

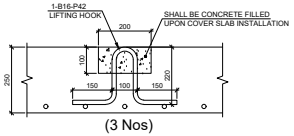

(3 Nos)
LIFTING HOOK DETAIL
SCALE 1:10

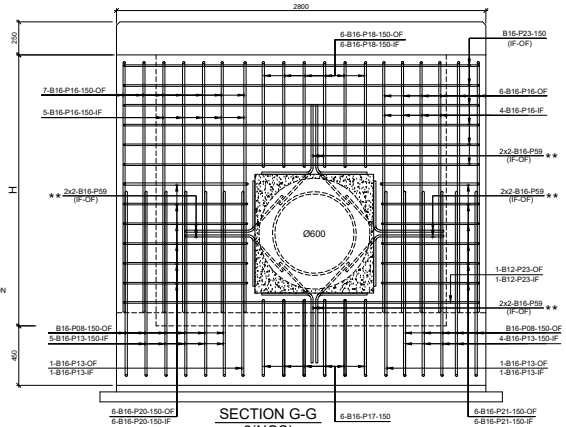

SECTION G-G
2(NOS)

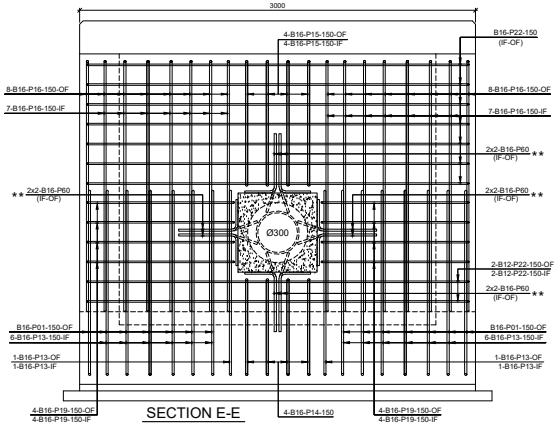

SECTION E-E

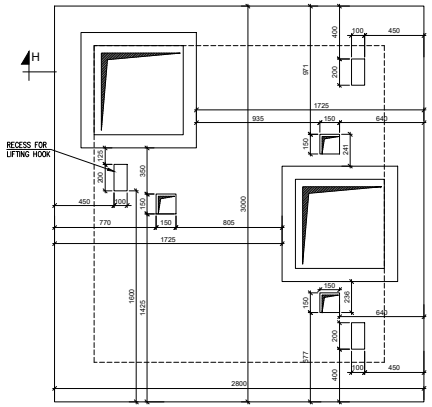

FORMWORK PLAN FOR PRECAST SLAB

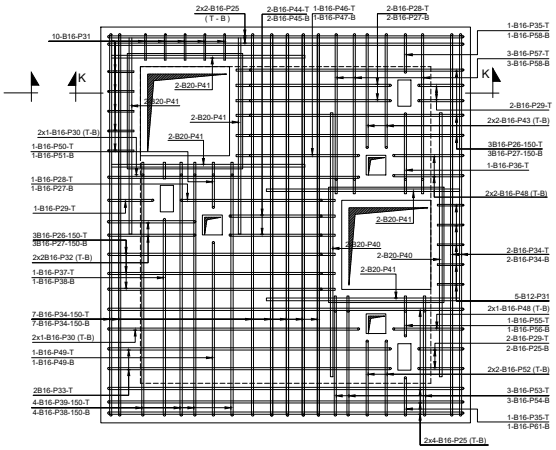

REINFORCEMENT PLAN FOR PRECAST SLAB

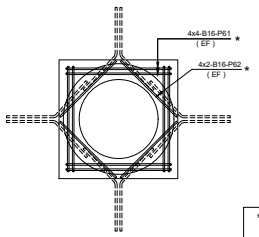

OPENING 900x900 (2 REQ'D)
Ø600 PIPE

★ : TO BE FIXED UPON PUDDLE FLANGE INSTALLATION

★★ : TO BE BENT UPON PUDDLE FLANGE INSTALLATION

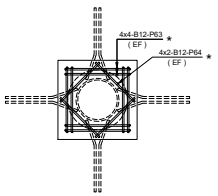

OPENING 600x600 (1 REQ'D)
Ø300 PIPE

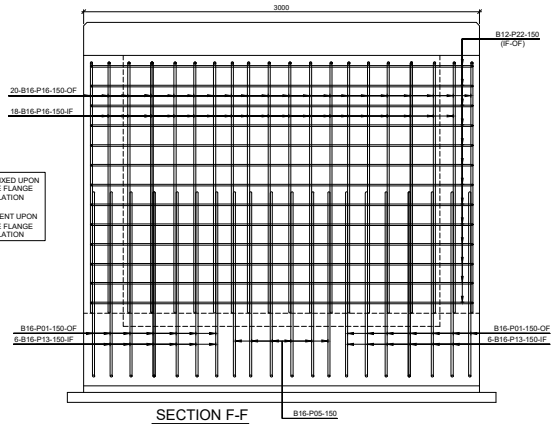

SECTION F-F

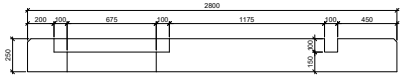

SECTION H-H

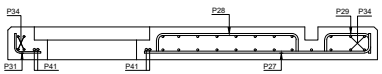

SECTION K-K

Valve Chamber Reinforcement Details

TSE ISOLATION VALVE CHAMBER TYPE-A1 FOR Ø600 LINE

PIPELINE Sta. 03+480 - R.H.S.(H=4550 mm)

MEMBER	BAR MARK	TYPE and SIZE	NO.OF MEMBER	NO.OF BARS IN EACH	TOTAL NO	LENGHT OF BAR (mm)	SHAPE	SHAPE CODE	A (mm)	B (mm)	C (mm)	D (mm)	r (mm)	Σ L T12	Σ L T16	Σ L T20
FOUNDATION	1	B16	1	14	14	5800	A B C	21	1600	2650	1600	–	32		81.20	
	2	B16	1	12	12	3250	A B C	21	325	2650	325	–	32		39.00	
	3	B16	1	2	2	2675	A B C	21	325	2075	325	–	32		5.35	
	4	B16	1	4	4	775	A B C	21	325	175	325	–	32		3.10	
	5	B16	1	6	6	4825	A B C	21	325	2950	1600	–	32		28.95	
	6	B16	1	6	6	3550	A B C	21	325	2950	325	–	32		21.30	
	7	B16	1	8	8	1650	A B C	21	325	1050	325	–	32		13.20	
	8	B16	1	11	11	6000	A B C	21	1600	2850	1600	–	32		66.00	
	9	B16	1	9	9	3400	A B C	21	300	2850	300	–	32		30.60	
	10	B16	1	2	2	2825	A B C	21	300	2275	300	–	32		5.65	
	11	B16	1	16	16	4000	A B C	21	300	3450	300	–	32		64.00	
	12	B16	1	4	4	1300	A B C	21	300	750	300	–	32		5.20	
	13	B16	1	60	60	1800	A B	11	210	1620	–	–	32		108.00	
WALL	14	B16	1	4	4	2050	B A B C	51	725	175	130	130	32		8.20	
	15	B16	1	8	8	3725	A B C	21	175	3450	175	–	32		29.00	
	16	B16	1	116	116	4500	A B	11	175	4350	–	–	32		522.00	
	17	B16	1	12	12	1725	B A B C	51	560	175	130	130	32		20.70	
	18	B16	1	24	24	3575	A B C	21	175	3300	175	–	32		85.00	
	19	B16	1	16	16	1350	A B C	21	160	1075	160	–	32		21.60	
	20	B16	1	24	24	1200	A B C	21	160	925	160	–	32		28.80	
	21	B16	1	24	24	1000	A B C	21	160	725	160	–	32		24.00	
	22	B16	1	112	112	3125	A B C	21	160	2850	160	–	32		350.00	
	23	B16	1	100	100	2925	A B C	21	160	2650	160	–	32		290.00	
	24	B16	1	4	4	800	A	00	800	–	–	–	32		3.20	
PRECAST COVER	25	B16	1	14	14	2950	A B C	21	150	2700	150	–	32		41.30	
	26	B16	1	6	6	1875	A B C	21	150	1625	150	–	32		11.25	
	27	B16	1	9	9	1850	A B	11	150	1725	–	–	32		16.65	
	28	B16	1	3	3	1325	A B C	21	150	1075	150	–	32		3.98	
	29	B16	1	5	5	600	A B C	21	150	350	150	–	32		3.00	
	30	B16	1	4	4	2150	A B C	21	150	1910	150	–	32		8.60	
	31	B16	1	15	15	325	A B	11	150	200	–	–	32		4.88	
	32	B16	1	4	4	925	A B C	21	150	670	150	–	32		3.70	
	33	B16	1	2	2	2400	A B C	21	150	2150	150	–	32		4.80	
							Total length to next page							–	1952.21	–

Bar Bending Schedule
as per BS 8666:2005

TSE ISOLATION VALVE CHAMBER TYPE-A1 FOR Ø600 LINE

PIPELINE Sta. 03+480 - R.H.S.(H=4550 mm)

MEMBER	BAR MARK	TYPE and SIZE	NO.OF MEMBER	NO.OF BARS IN EACH	TOTAL NO	LENGHT OF BAR (mm)	SHAPE	SHAPE CODE	A (mm)	B (mm)	C (mm)	D (mm)	r (mm)	Σ L T12	Σ L T16	Σ L T20
							Total length from previous page							–	1952.21	–
PRECAST COVER	34	B16	1	18	18	3100	A B C	21	130	2900	130	–	32		55.80	
	35	B16	1	2	2	500	A B C	21	130	300	130	–	32		1.00	
	36	B16	1	1	1	725	A B C	21	130	510	130	–	32		0.73	
	37	B16	1	1	1	1700	A B C	21	130	1500	130	–	32		1.70	
	38	B16	1	5	5	2025	A B	11	130	1925	–	–	32		10.13	
	39	B16	1	4	4	2025	A B C	21	130	1825	130	–	32		8.10	
	40	B20	1	4	4	2000	A	00	2000	–	–	–	70			8.00
	41	B20	1	12	12	2000	A B	11	500	1550	–	–	70			24.00
	42	B16	1	3	3	750	A B A C	99	150	100	220	–	32		2.25	
	43	B16	1	4	4	1075	A B C	21	130	870	130	–	32		4.30	
	44	B16	1	2	2	950	A B C	21	150	705	150	–	32		1.90	
	45	B16	1	2	2	925	A B	11	150	805	–	–	32		1.85	
	46	B16	1	1	1	1075	A B C	21	150	830	150	–	32		1.08	
	47	B16	1	1	1	1050	A B	11	150	930	–	–	32		1.05	
	48	B16	1	6	6	775	A B C	21	150	540	150	–	32		4.65	
	49	B16	1	2	2	1525	A B C	21	130	1325	130	–	32		3.05	
	50	B16	1	1	1	450	A B C	21	130	250	130	–	32		0.45	
	51	B16	1	1	1	475	A B	11	130	350	–	–	32		0.48	
	52	B16	1	4	4	775	A B C	21	130	575	130	–	32		3.10	
	53	B16	1	3	3	1000	A B C	21	130	810	130	–	32		3.00	
	54	B16	1	3	3	1000	A B	11	130	910	–	–	32		3.00	
	55	B16	1	1	1	400	A B C	21	130	210	130	–	32		0.40	
	56	B16	1	1	1	400	A B	11	130	310	–	–	32		0.40	
	57	B16	1	3	3	1325	A B C	21	130	1110	130	–	32		3.98	
	58	B16	1	4	4	1325	A B	11	130	1210	–	–	32		5.30	
WALL	59	B16	1	32	32	900	A B	11	530	400	–	–	32		28.80	
	60	B16	1	16	16	675	A B	11	450	250	–	–	32		10.80	
	61	B16	1	32	32	1150	A B C	21	200	800	200	–	32		36.80	
	62	B16	1	16	16	600	A	00	600	–	–	–	32		9.60	
	63	B12	1	16	16	850	A B C	21	200	500	200	–	24	13.60		
	64	B12	1	8	8	420	A	00	420	–	–	–	24	3.36		

	T12	T16	T20
TOTAL LENGTH (m)	16.96	2155.91	32.00
WEIGHT PER m. (kg/m)	0.888	1.578	2.466
WEIGHT (kg)	15.06	3402.03	78.91
TOTAL WEIGHT (kg)	3496.00		

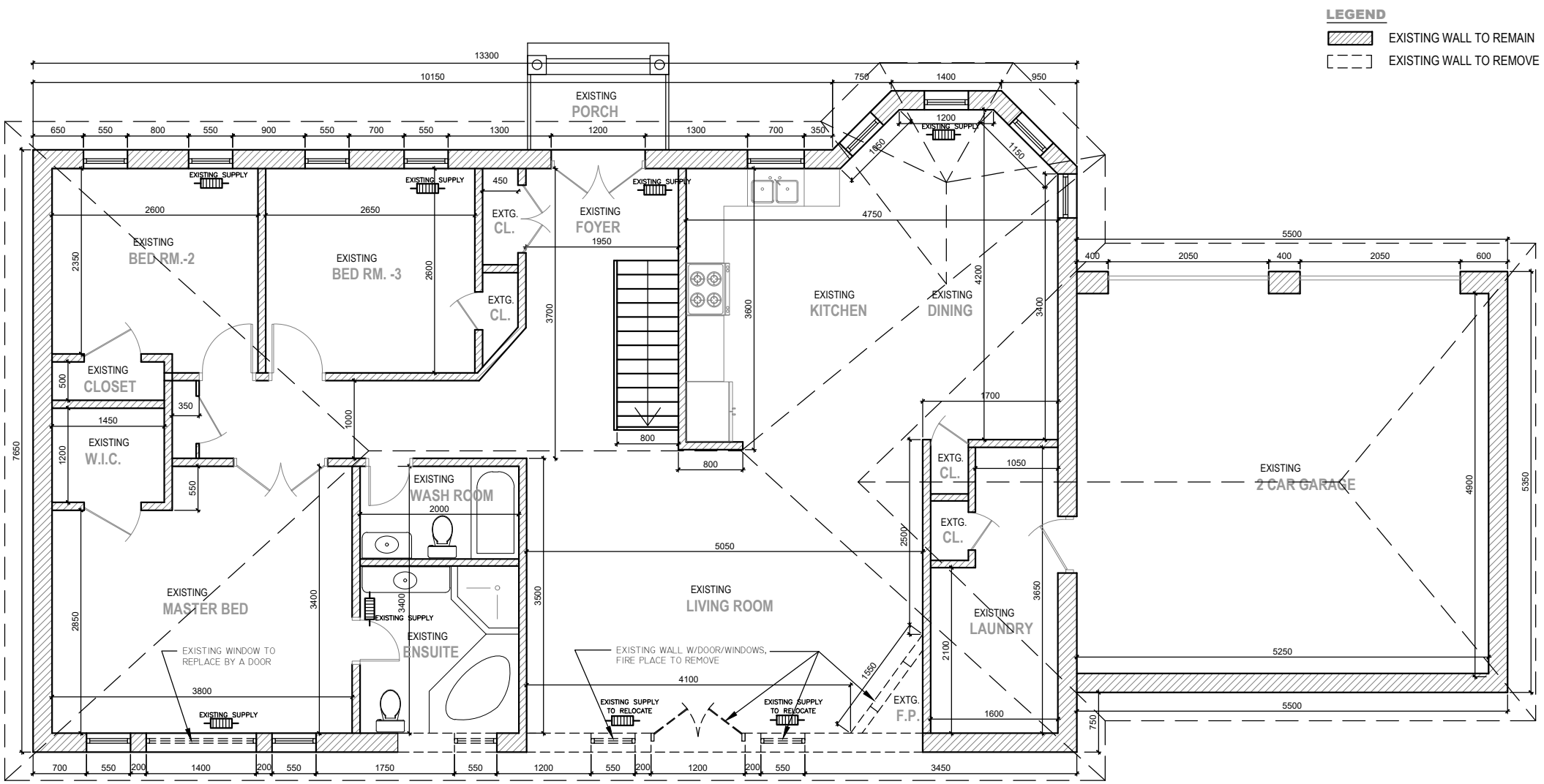

EXISTING GROUND FLOOR PLAN

Existing House Structural Floor Plan

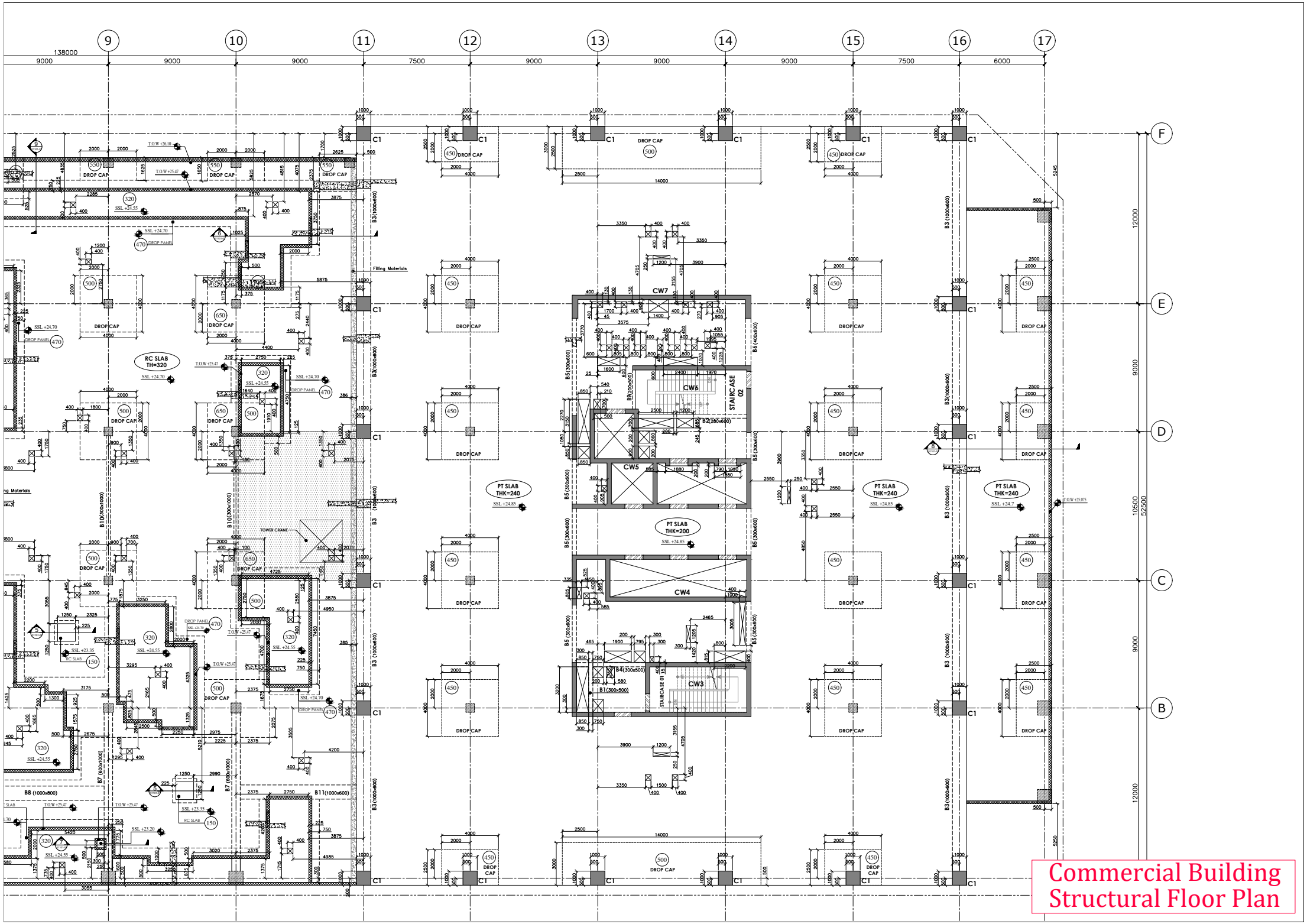
Commercial Building
Structural Floor Plan
138000
9000
9000
9000
7500
9000
9000
9000
7500
6000
9
10
11
12
13
14
15
16
17
F
E
D
C
B
12000
9000
10500
52500
9000
12000
RC SLAB
TH=320
PT SLAB
THK=240
PT SLAB
THK=200
CW7
CW6
CW5
CW4
CW3
STAIRCASE 02
STAIRCASE 01
DROP CAP
DROP PANEL
Filling Materials
TOWER CRANE
C1
B3 (1000x600)
B5 (300x600)
B6 (400x600)
B2 (280x600)
B4 (300x500)
B1 (300x500)
B10 (300x1000)
B7 (600x1000)
B8 (1000x800)
B11 (1000x600)

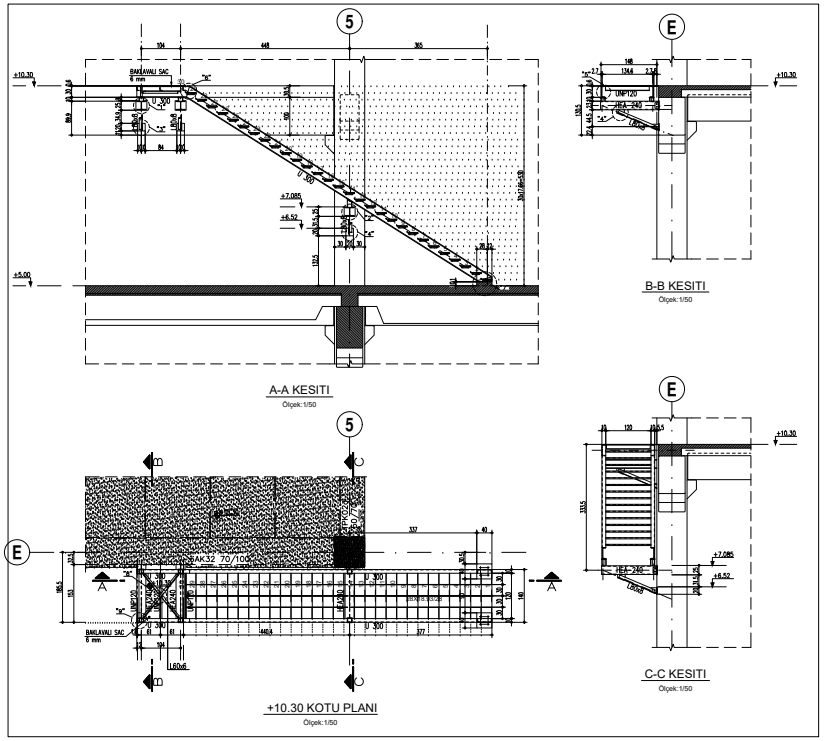

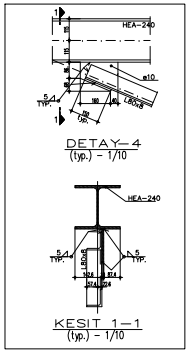

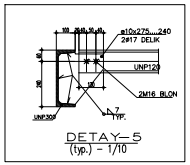

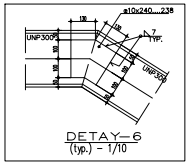

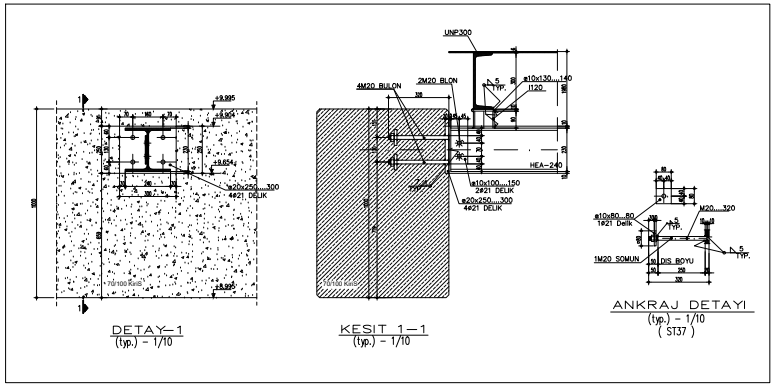

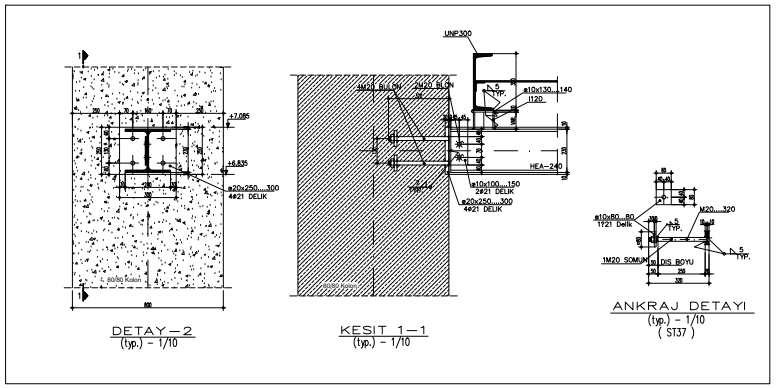

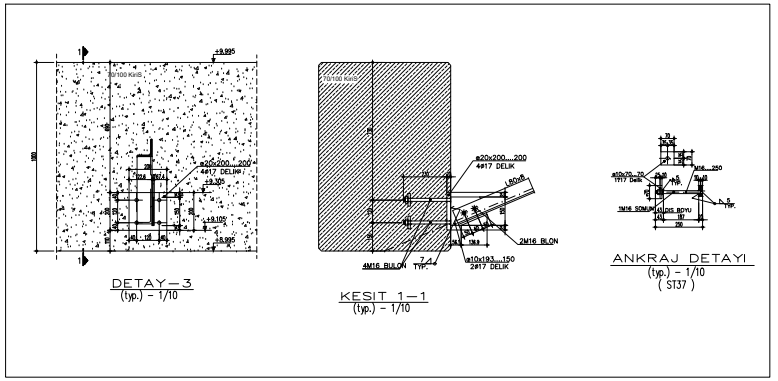

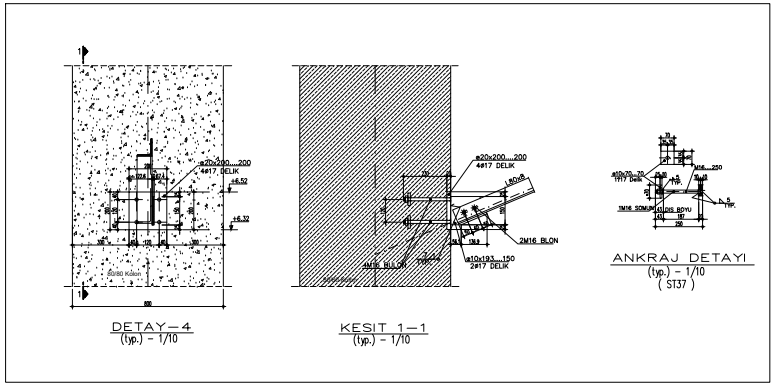

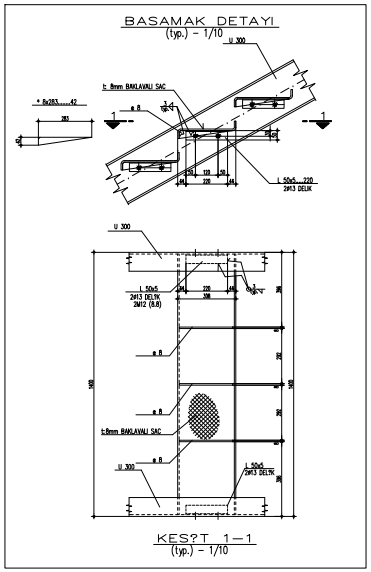

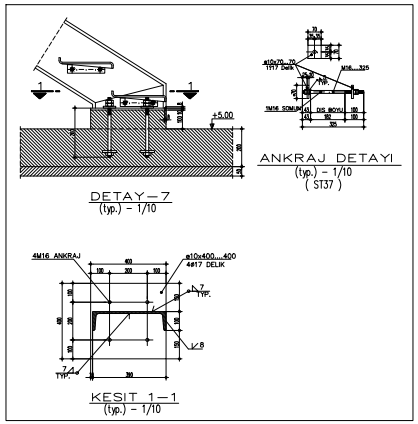

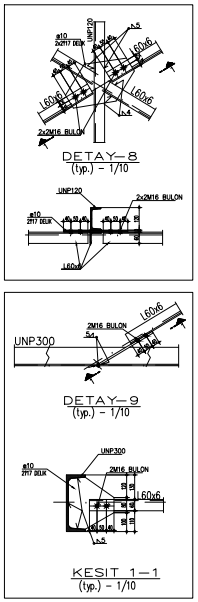

GENEL NOTLAR

1- AKSI BELIRTILMEDIKÇE ÖLÇÜLER mm.,KOTLAR m.DIR

2- BÜTÜN ÖLÇÜLER YERINDE KONTROL EDILDIKTEN SONRA DONATILAR KESILECEK VE IMALATA BASLANACAKTIR.

3-ÇELIK ANKRAJ DETAYLARI IÇIN ANKRAJ DETAYI PAFTALARINA BAKINIZ.

MALZEME

1- YAPISAL ÇELIK :

a- PROFILLER VE PLAKALAR : St. 37 (fy=240 N/mm²)

b- BULONLAR : 8.8 DIN 931

c- SOMUNLAR : 8.8 DIN 934

d- PULLAR : 8.8 DIN 7989

2- ANKRAJ BULONLARI : St. 37 (fy=240 N/mm²)

3-AKSI BELIRTILMEDIKÇE TÜM BULONLAR (8.8) KALITESINDEDIR.

ILGILI PAFTALAR

REV	TARIH	AÇIKLAMA	TASARIM	ÇIZEN	KONTROL	ONAY
0	20.03.2007	ONAY IÇIN	K.Ö	S.K	A.G.	L.Ö.

IKEA
ISTANBUL - BAYRAMPASA

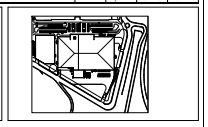

IKEA BUILDING in TURKEY
CONNECTION DETAILS

Tasarım	Çizen	Kontrol	Onay
K. ÖZAL	S. KAZANCI	A. GÜNAY	L. ÖZDEN

Ölçek	Tarih	Proje Kodu	Disiplin	Ünite	Dök. Tipi	Dökümanın No	Rev. No.
1/50	20.03.2007	IKB	CE	00	SD	313	00

08-42-00-30-00.dwg

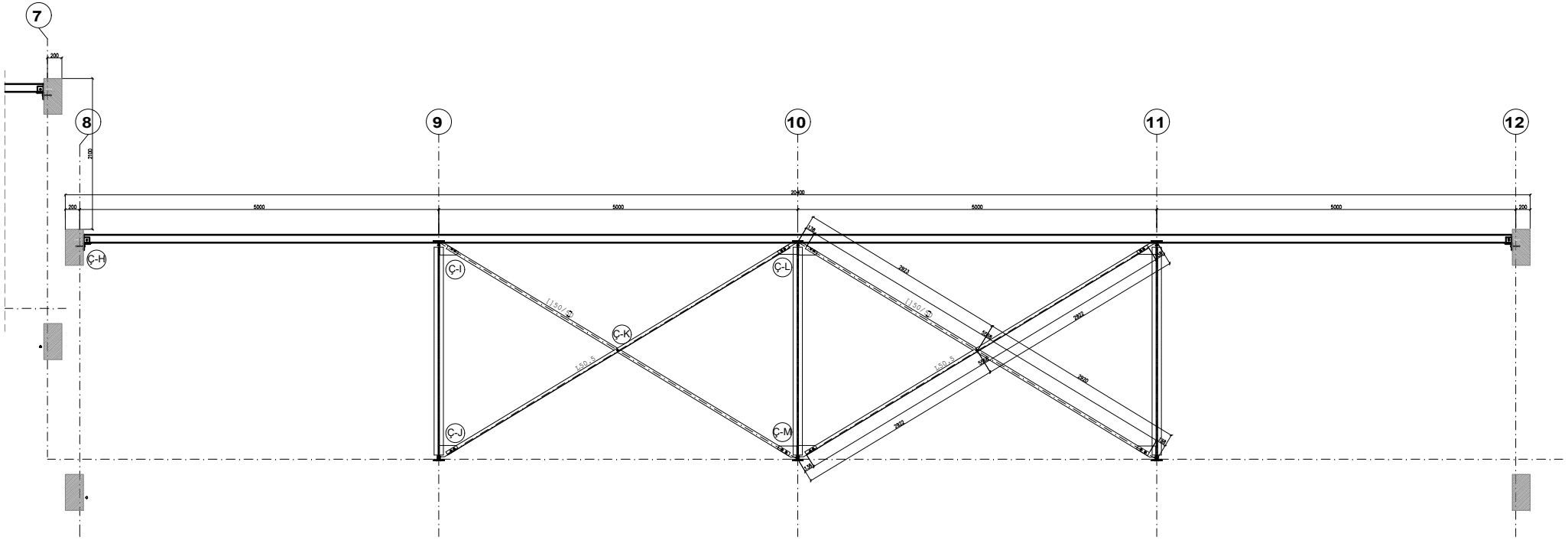

WORKSHOP BUILDING STABILITY CONNECTION OF ROOF RIDGE AXIS/
ATÖLYE BINASI MAHYA AKSI STABILITE BAGLANTISI

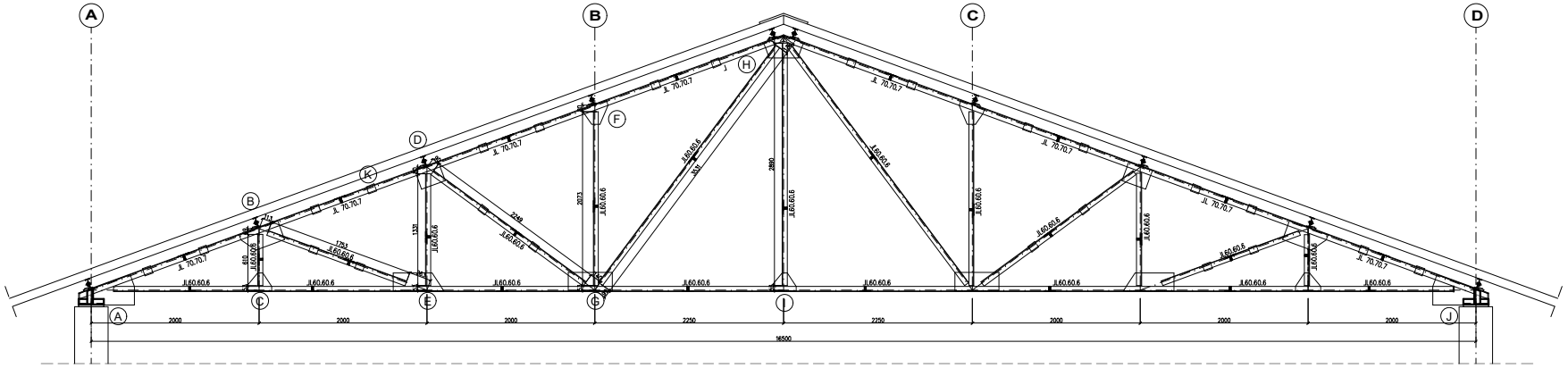

TRUSS SYSTEM PLAN/
MAKAS SISTEM PLANI

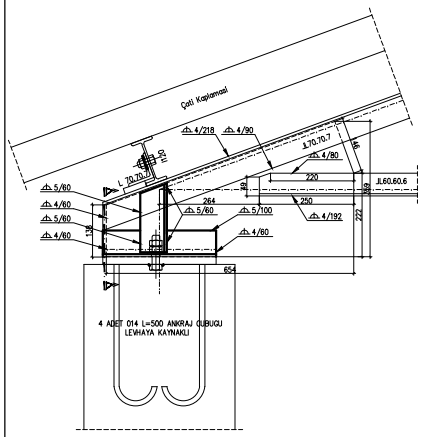

Ⓐ DETAIL/DETAYI

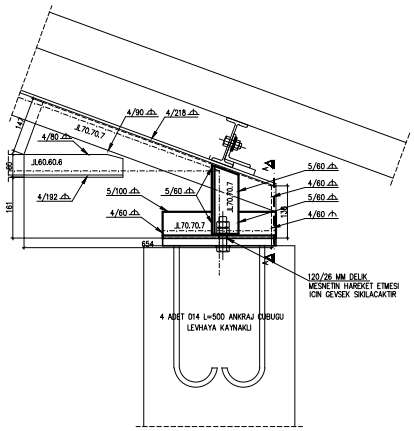

Ⓙ DETAIL/DETAYI

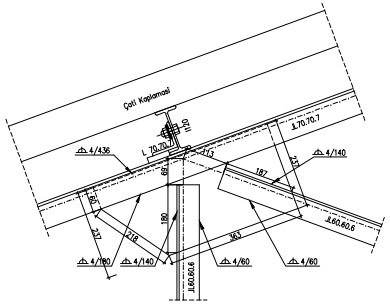

Ⓑ DETAIL/DETAYI

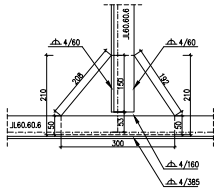

Ⓒ DETAIL/DETAYI

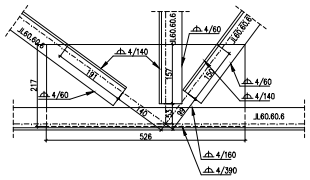

Ⓖ DETAIL/DETAYI

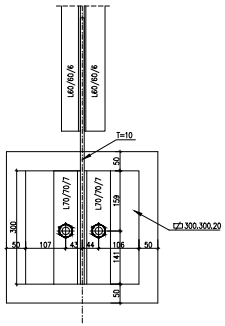

Ⓐ DETAYI PLAN

Ⓐ DETAIL PLAN

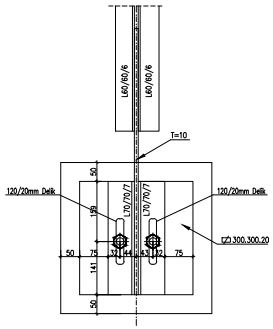

Ⓙ DETAYI PLAN

Ⓙ DETAIL PLAN

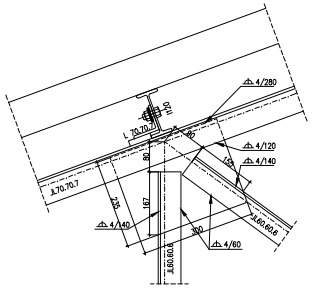

Ⓓ DETAIL/DETAYI

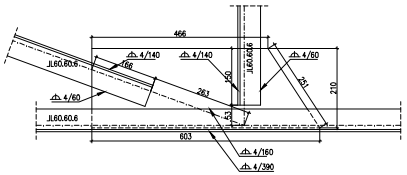

Ⓔ DETAIL/DETAYI

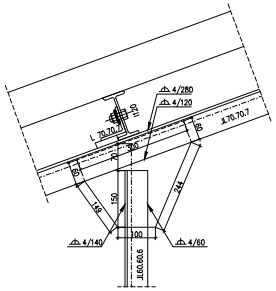

Ⓕ DETAIL/DETAYI

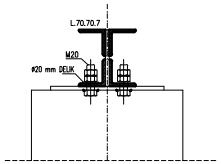

Ⓐ DETAYI A-A KESITI

Ⓐ DETAIL A-A SECTION

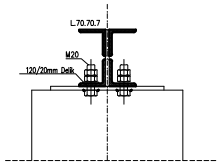

Ⓙ DETAYI A-A KESITI

Ⓙ DETAIL A-A SECTION

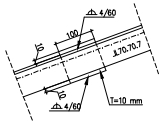

Ⓚ DETAIL/DETAYI

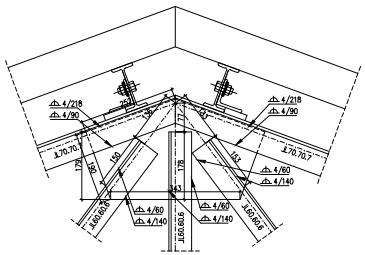

Ⓗ DETAIL/DETAYI

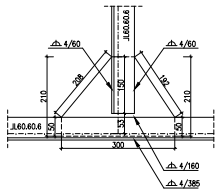

Ⓘ DETAIL/DETAYI

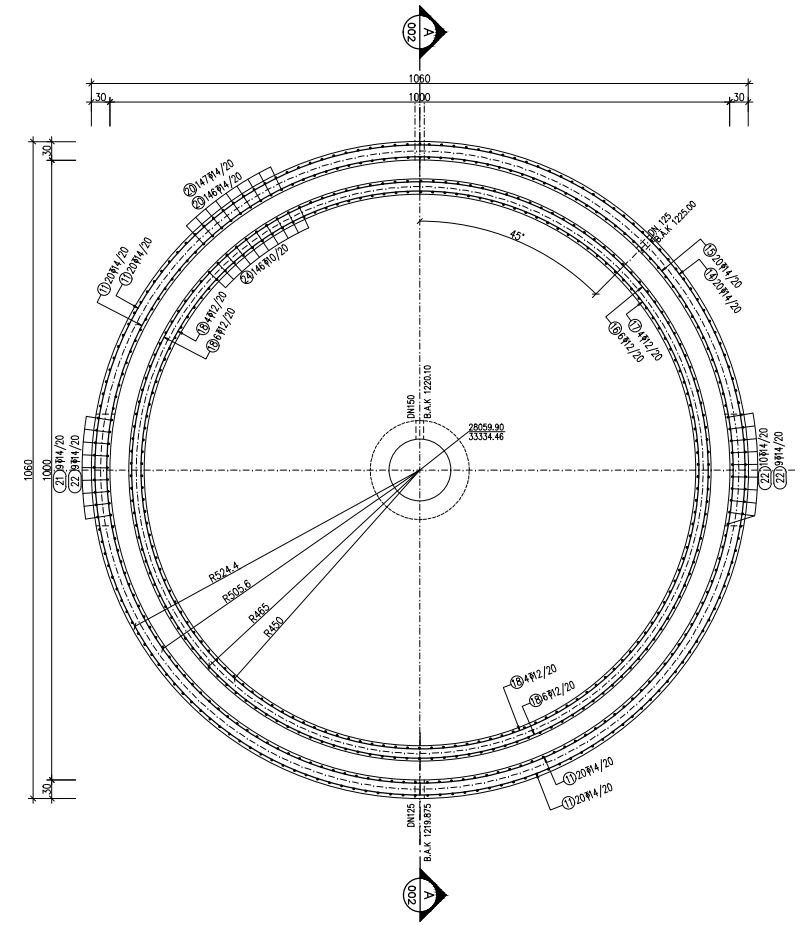

REINFORCEMENT PLAN
Scale:1/50

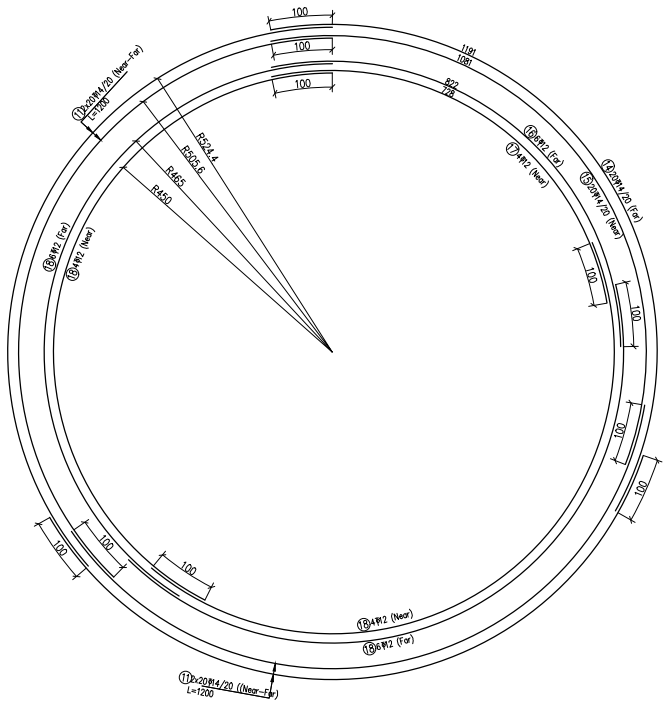

REINFORCEMENT DETAIL
Scale:1/50

BAR BENDING SCHEDULE

BAR MARK	DIA	DETAIL	LENGTH (m)	NO	TOTAL LENGTH (m) Φ8	Φ10	Φ12	Φ14	Φ16
1	12	25 127~150 25	1.90	40	-	-	76.00	-	-
2	12	20 120 20	1.60	58	-	-	92.80	-	-
3	12	–	4.55	16	-	-	72.80	-	-
4	12	–	5.65	16	-	-	90.40	-	-
5	8	8 26 8	0.42	1032	433.44	-	-	-	-
6	14	20 50 20 434 1125	6.29	88	-	-	-	553.52	-
6A	14	47 456 1101	6.24	88	-	-	-	549.12	-
7	14	20 50 20 370	4.40	86	-	-	-	378.40	-
8	14	47 372	4.39	86	-	-	-	377.54	-
9	14	20 50 20 230	3.00	174	-	-	-	522.00	-
10	14	47 232	2.99	174	-	-	-	520.26	-
11	14	1200	12.00	288	-	-	-	3 456.00	-
12	14	248~1191	11.91	100	-	-	-	1 191.00	-
13	12	–	0.88	340	-	-	299.20	-	-
14	14	1191	11.91	40	-	-	-	476.40	-
15	14	1081	10.81	40	-	-	-	432.40	-
16	12	822	8.22	12	-	-	98.64	-	-
17	12	728	7.28	8	-	-	58.24	-	-
18	12	1200	12.00	40	-	-	480.00	-	-
19	14	25 95	1.20	660	-	-	-	792.00	-
20	14	385 15	4.00	586	-	-	-	2 344.00	-
21	14	410 15	4.25	18	-	-	-	76.50	-
22	14	410 90	5.00	56	-	-	-	280.00	-
23	12	15 50 75 50	2.00	292	-	-	584.00	-	-
24	10	–	1.70	292	-	496.40	-	-	-
25	8	8 21 8	0.37	144	53.28	-	-	-	-
26	12	100 1100	12.00	28	-	-	336.00	-	-
27	14	15 1185	12.00	24	-	-	-	288.00	-
28	12	600	6.00	14	-	-	84.00	-	-
29	14	430	4.30	12	-	-	-	51.60	-
30	16	150	1.50	16	-	-	-	-	24.00
31	10	–	4.20	173	-	726.60	-	-	-
32	10	–	2.46	361	-	888.06	-	-	-
33	12	15 585	6.00	32	-	-	192.00	-	-
34	12	707 15	7.22	16	-	-	115.52	-	-
35	12	800	8.00	16	-	-	128.00	-	-
36	16	15 585	6.00	16	-	-	-	-	96.00
37	16	727 15	7.42	8	-	-	-	-	59.36
38	16	830	8.30	8	-	-	-	-	66.40
39	10	10 175 710	1.95	24	-	46.80	-	-	-
40	12	20 85 20	1.25	14	-	-	17.50	-	-
41	12	20 110 20	1.50	12	-	-	18.00	-	-
42	10	–	2.70	2	-	5.40	-	-	-
43	12	18 70 22	1.10	6	-	-	6.60	-	-
44	12	18 82 20	1.20	6	-	-	7.20	-	-
45	10	–	1.20	6	-	7.20	-	-	-
46	10	–	4.30	4	-	17.20	-	-	-
47	10	–	4.42	4	-	17.68	-	-	-
48	10	115	1.15	15	-	17.25	-	-	-
TOTAL LENGTH (m)					**486.72**	**2 222.59**	**2 756.90**	**12 288.74**	**245.76**
WEIGHT PER m. (kg/m)					**0.395**	**0.617**	**0.888**	**1.208**	**1.578**
WEIGHT (kg)					**192.25**	**1371.34**	**2448.13**	**14844.80**	**387.81**
TOTAL WEIGHT (kg)					**4399.53**				

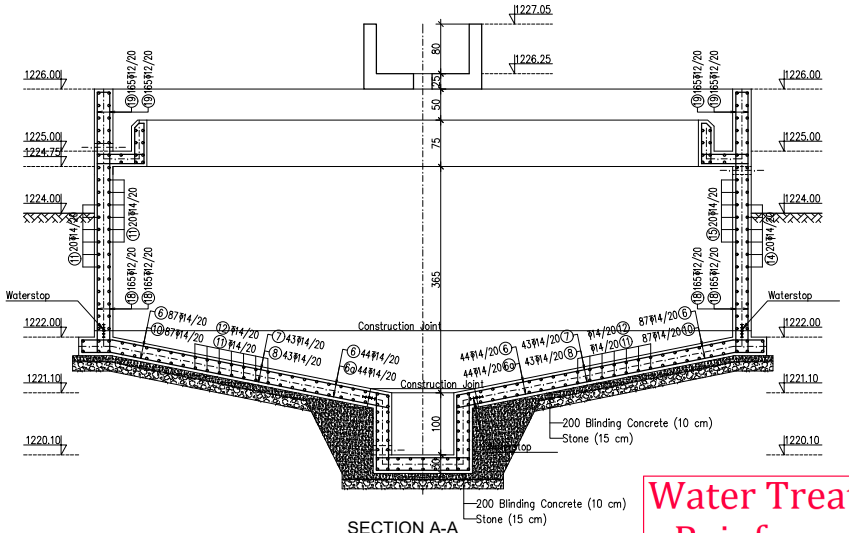

SECTION A-A
Scale:1/50

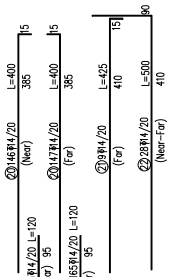

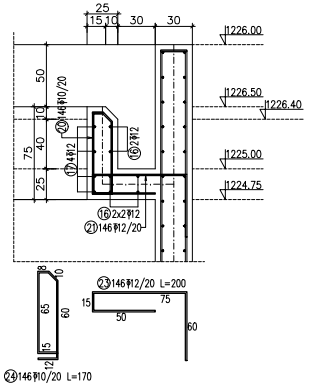

PARAPET DETAIL
Scale:1/25

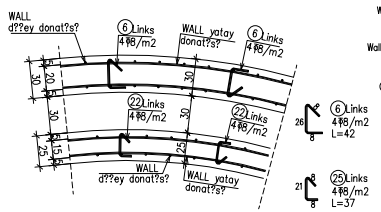

LINKS DETAIL
Scale:1/25

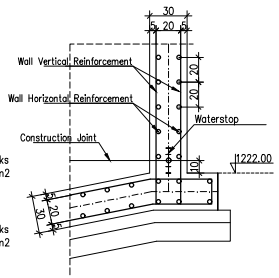

CONSTRUCTION JOINT DETAIL
Scale:1/25

Water Treatment Facility Reinforcement Details

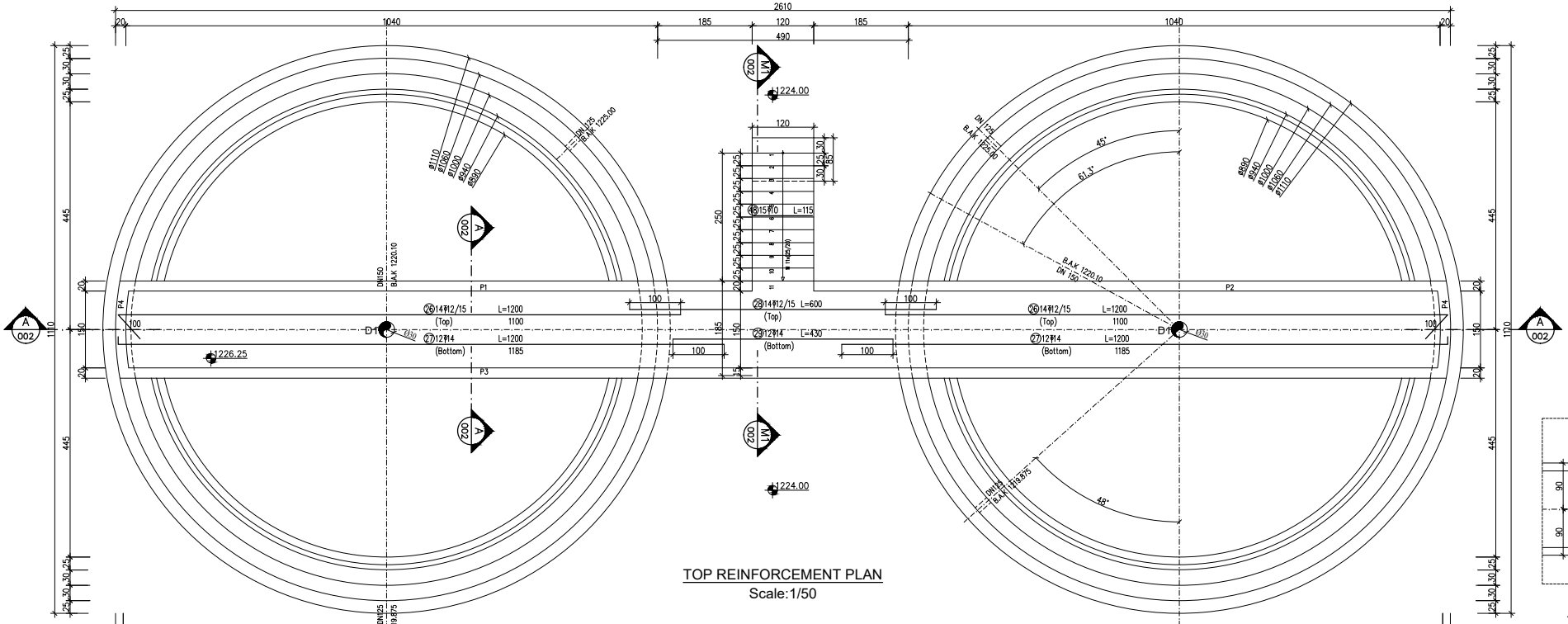
TOP REINFORCEMENT PLAN
Scale:1/50

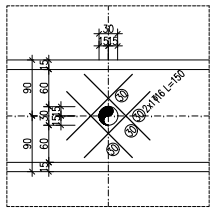
D1 HOLE DETAIL
Scale:1/50

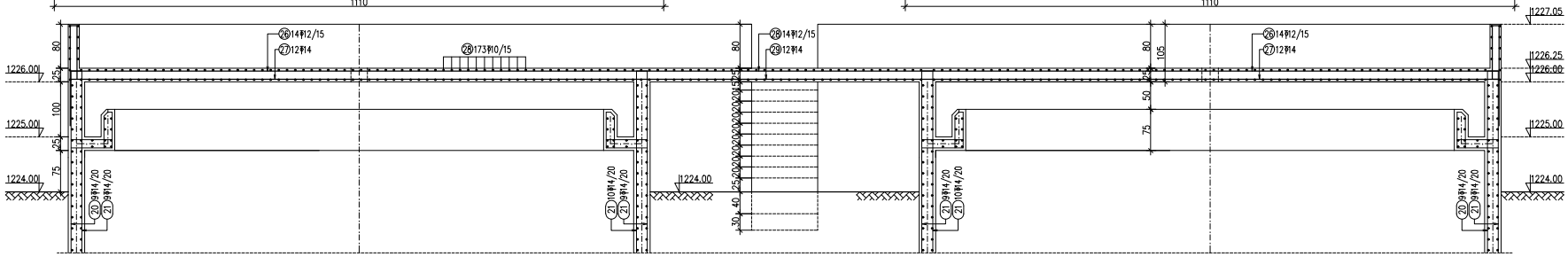
A-A SECTION
Scale:1/50

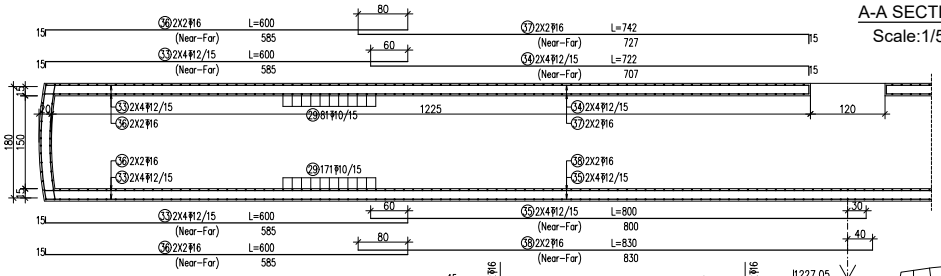

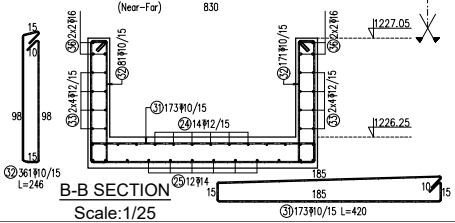
B-B SECTION
Scale:1/25

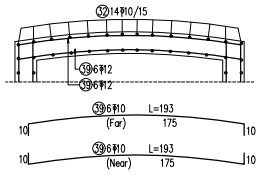
P4 WALL PLAN
Scale:1/25

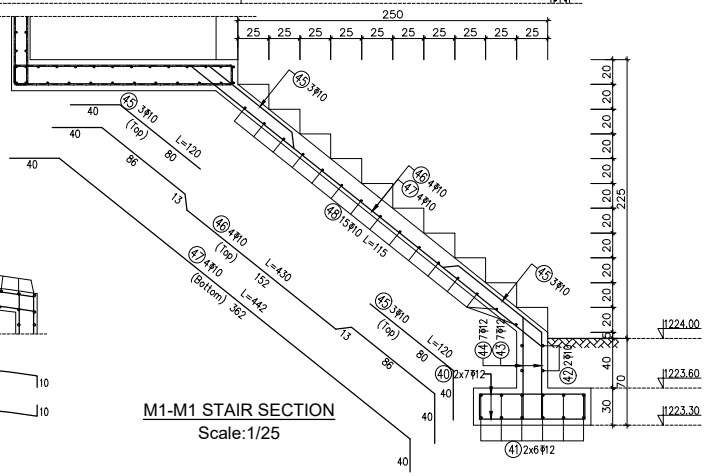
M1-M1 STAIR SECTION
Scale:1/25

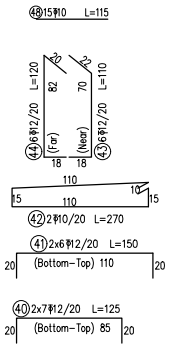

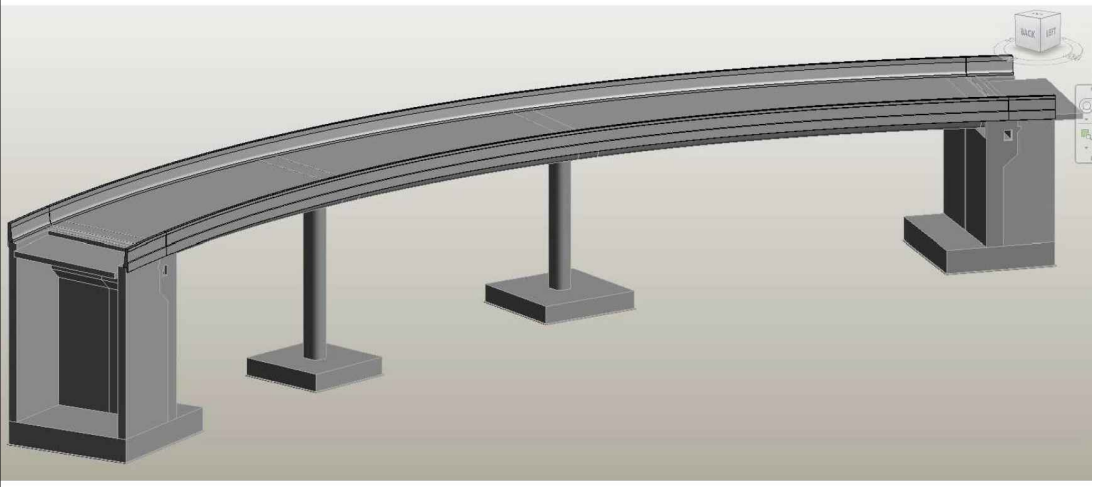

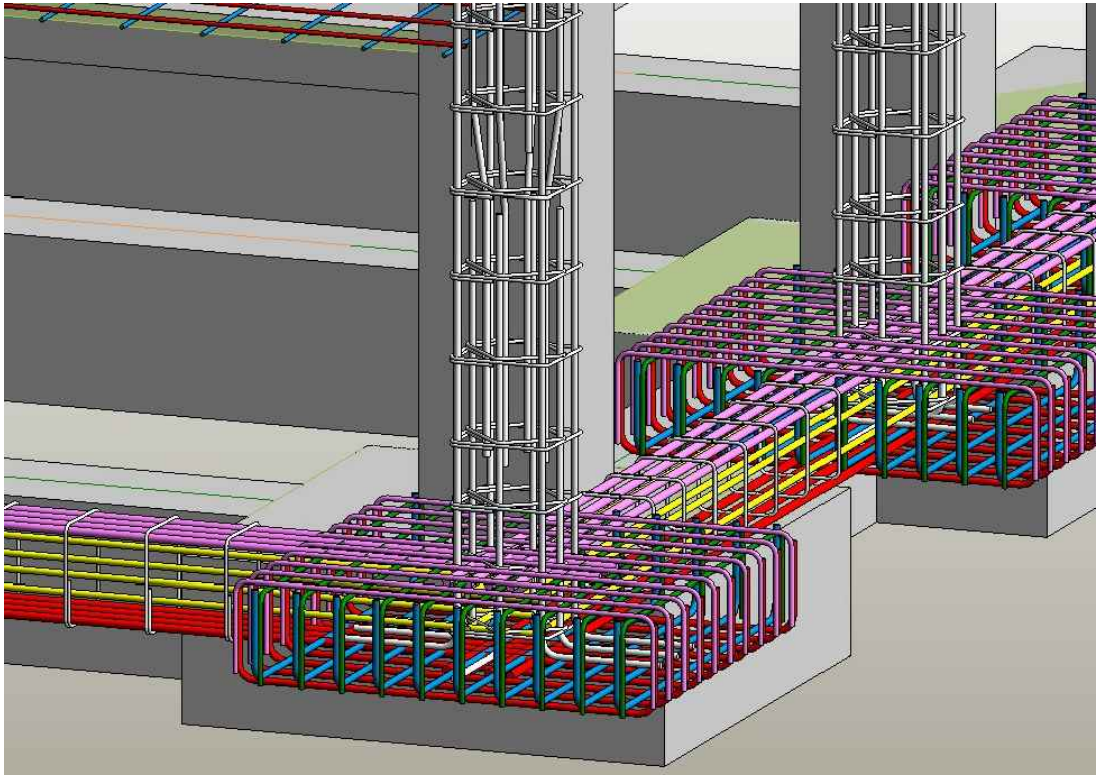

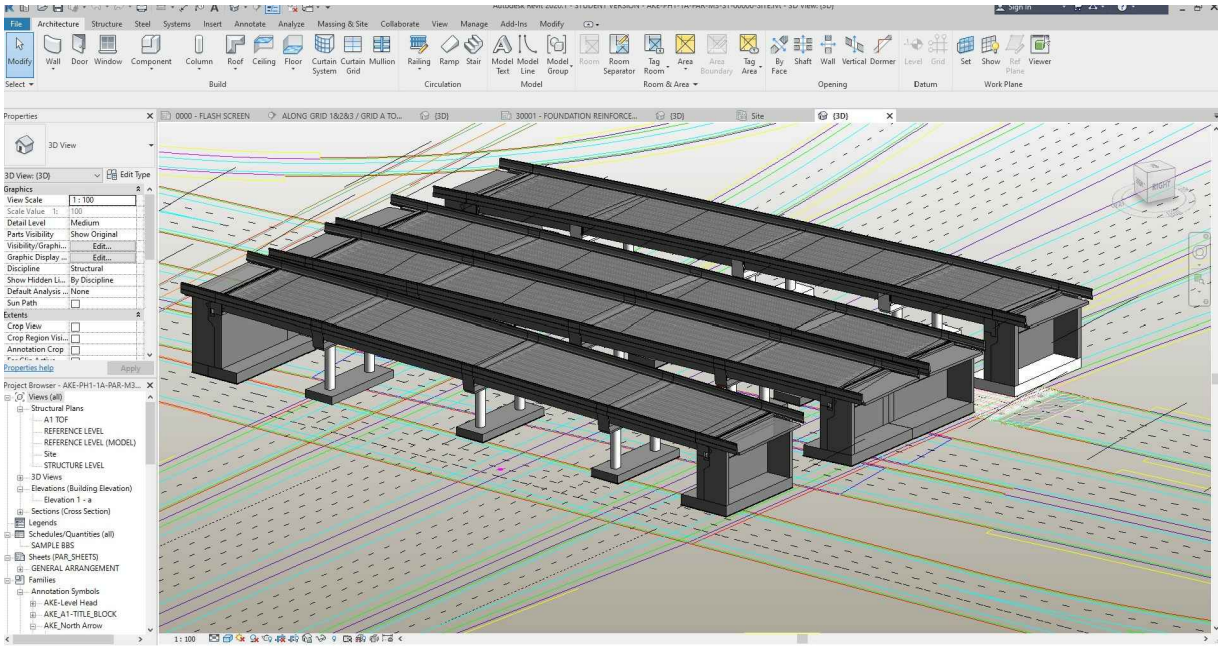

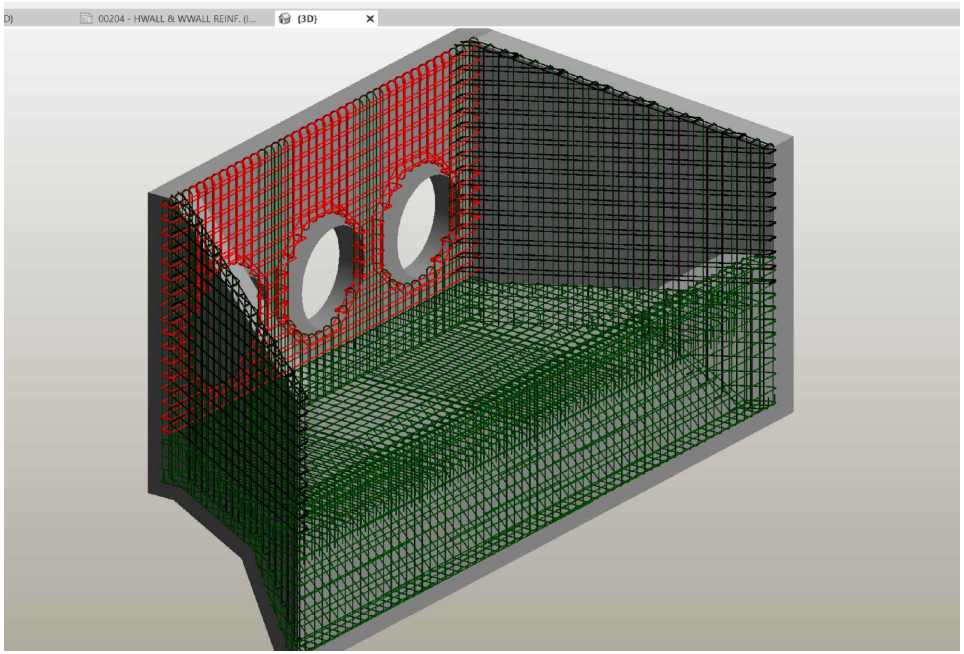

3D MODELING WITH REVIT STRUCTURES

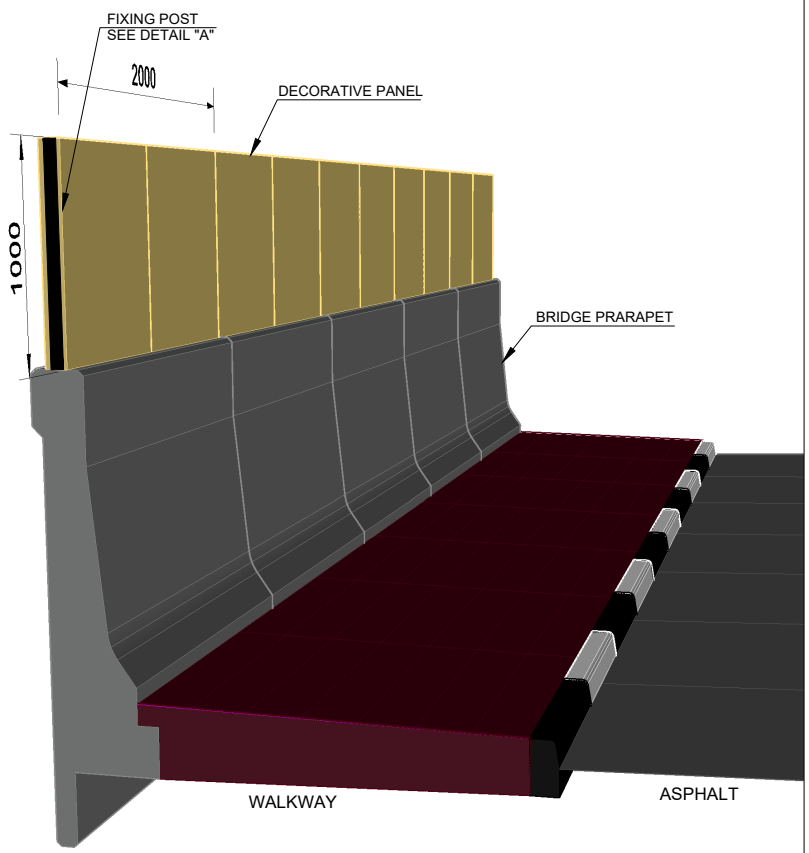

DECORATIVE PANEL DETAIL ON THE DECK PARAPET
for N5 (DRB-1) and N10 (DRB-2) BRIDGES

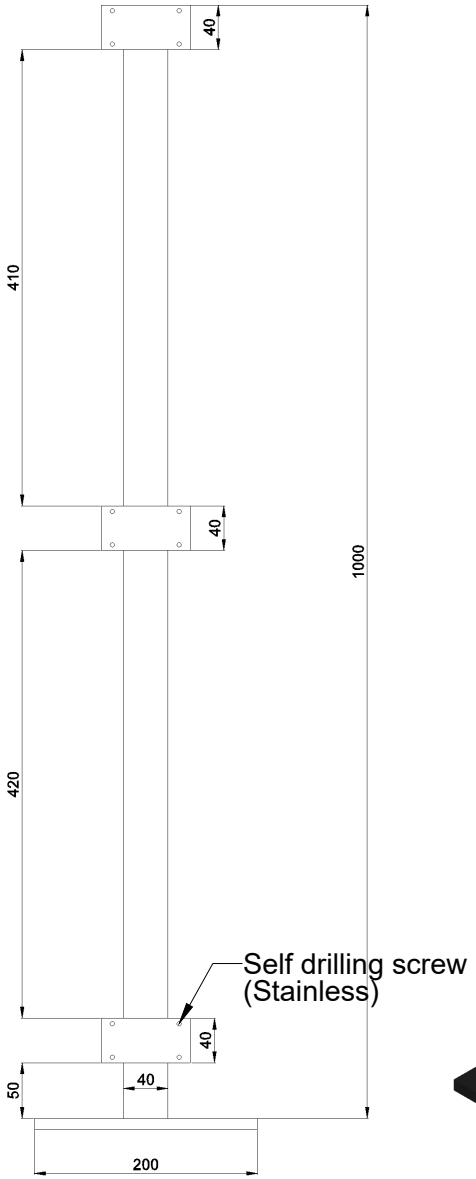

FIXING POST (DETAIL "A")

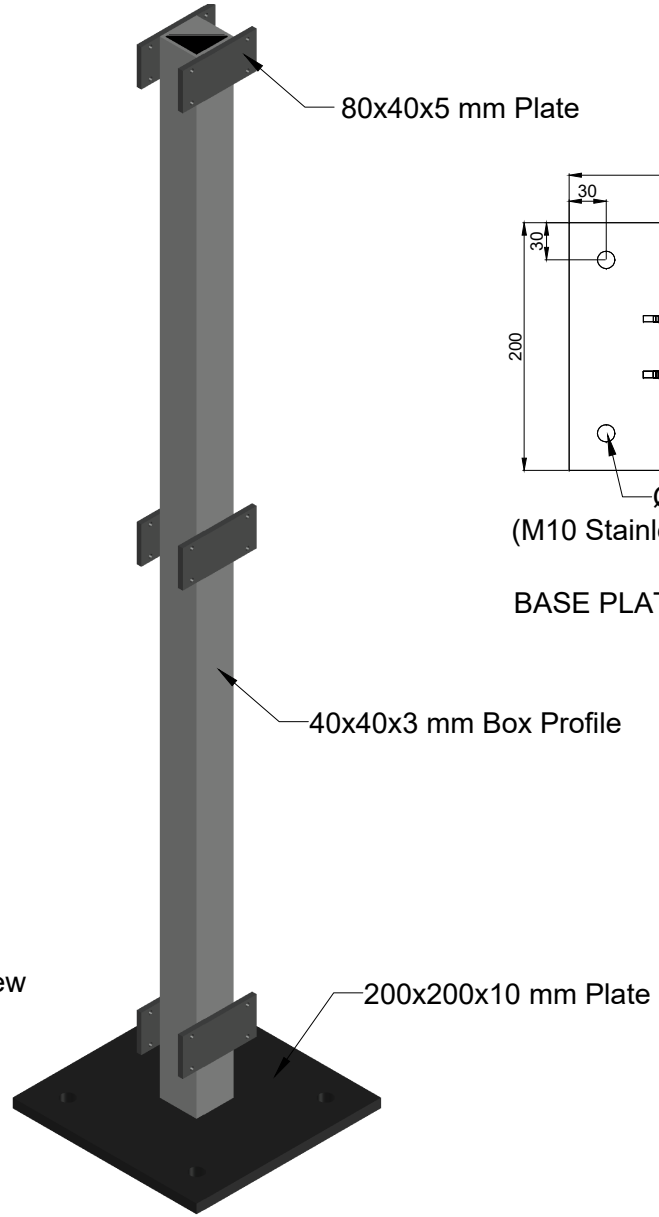

FIXING POST 3D VIEW

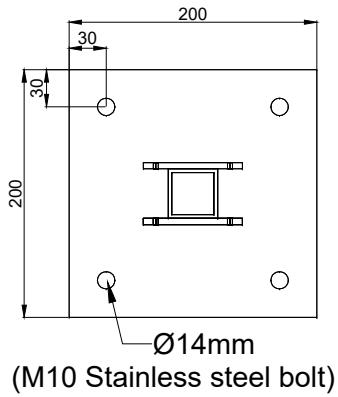

BASE PLATE - PLAN

NOTES :

- All dimensions are in millimeters.
- Post to be sand blasted, anti-rust coat to be applied.
- Painted white color to match panel color.