GWS

GLOBAL WASTE SOLUTIONS

6" Smart Valve Cut Sheet

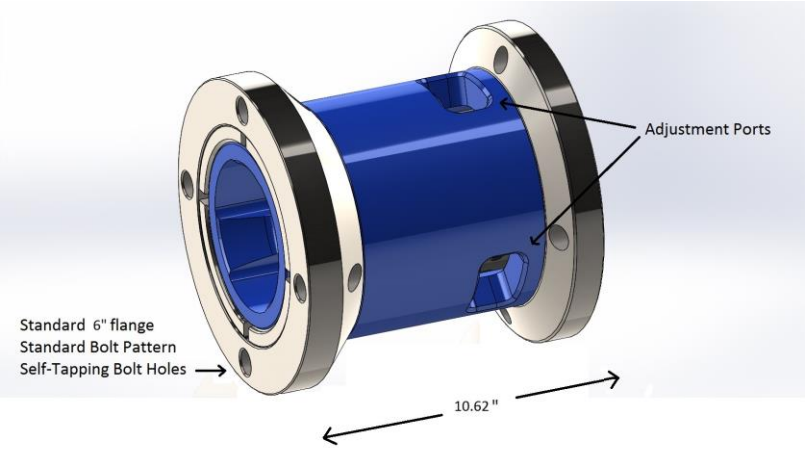

Materials

Acetron GP

Stainless Steel

FDA approved internal o-rings

Certifications

NSF 61 (potable water)

NSF 372 (lead free)

Certifying laboratory: IAPMO R&T

Installation Dimensions

6" SMART VALVE:

Body Length – Flange to Flange	10.62"
Bolt Pattern	Standard
Bolt Holes	Self Tapping

For best results install the Smart Valve downstream of water meter and backflow preventer (if present), but before any other valves or equipment such as a pressure reducer or booster pump. Where possible it is recommended to have 10 diameters of straight pipe before and after the valve. All flanged installations to use gaskets at each flange.

4429 Poplar Level Road, Louisville, KY 40213 (502) 609-1147 www.globalwastesolutions.net