JIB TACK SHACKLE ELEVATION DETAIL

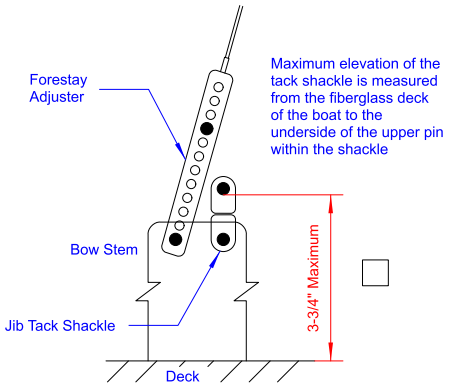

MAINSHEET BRIDLE DETAIL

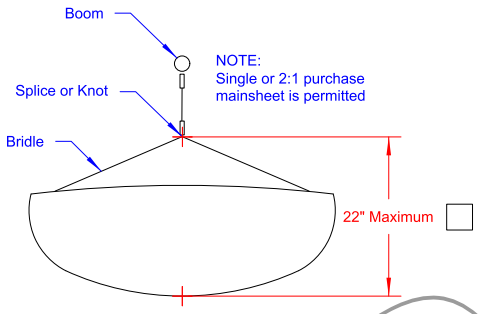

Enter the hull serial number | 1 | 2 | 3 | 4 |

AMENDMENTS

Record inspections/measurements for changed equipment (e.g. new rudder, centerboard, mast), boat weight changes, grandfathered items, etc. The measurer making the amendment shall record the inspections/measurements made, their name and title, and the date.

MAST FORE/AFT POSITION AND JIB SHEET FAIRLEAD FORE/AFT POSITION DETAIL

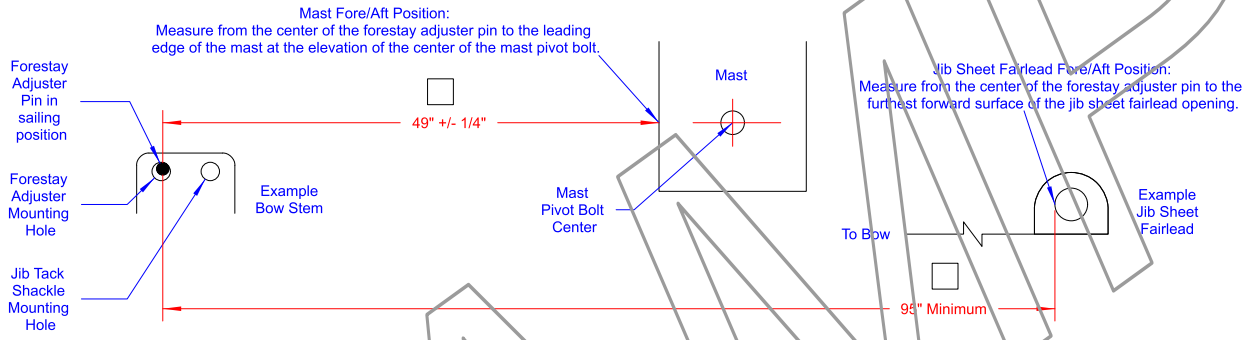

DESIGN AND REPAIR

The design of the boat hull, which includes the materials, shapes, and dimensions of its original construction, have not been altered accept as permitted by the current Lido 14 Class Association Bylaws and Approved Changes.

Repairs made to the boat hull are in keeping with the original design of the boat hull (i.e. the materials, shape, and dimensions of the repaired boat are very similar to those of the boat's original construction)

CENTERBOARD JIBE DETAIL

When measuring centerboard jibe, place the centerboard into its upwind sailing position (i.e. full down position) and push it, using only one hand near the foil tip, into its port and starboard resting positions.

Measure the movement of the leading and trailing edges of the centerboard where it emerges from the slot in the hull.

Only the natural movement (jibing) resulting from this test is to be measured; do not otherwise force the centerboard to rotate.

Centerboard jibe measurement is the Leading Edge Movement minus Trailing Edge Movement.

Centerboard Jibe is Less Than or Equal to 1/4"

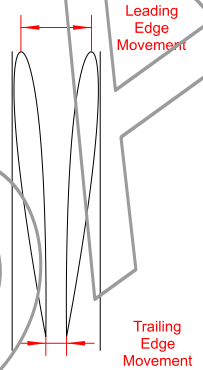

RUDDER ANGLE DETAIL

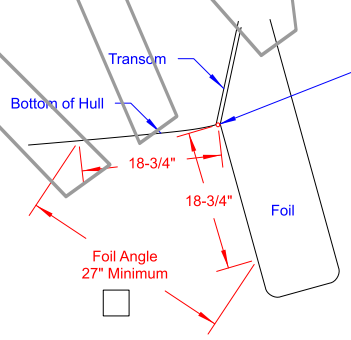

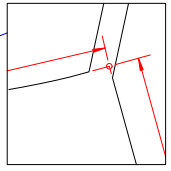

The rudder angle vertex point is the intersection of the lines representing the rudder's leading edge and the bottom of the hull.

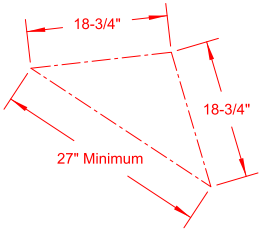

RUDDER SHAPE DETAIL

The upper rudder depth measurement point is the intersection of the lines representing the rudder's leading edge and the bottom of the hull. See Rudder Angle Detail.

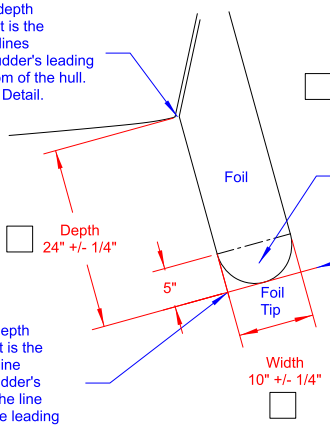

Foil Thickness: 3/4" +/- 1/8" from top to within 5" of bottom

Profile of bottom 5" of foil is unrestricted

Tangent line

The lower rudder depth measurement point is the intersection of the line representing the rudder's leading edge and the line perpendicular to the leading edge tangent to the rudder tip.

SAMPLE