# Adjustable 10" concealed casement engineered composite hinge.

ALL METAL STAMPING,INC
Abbotsford, Wi 54405 : 715-223-6324
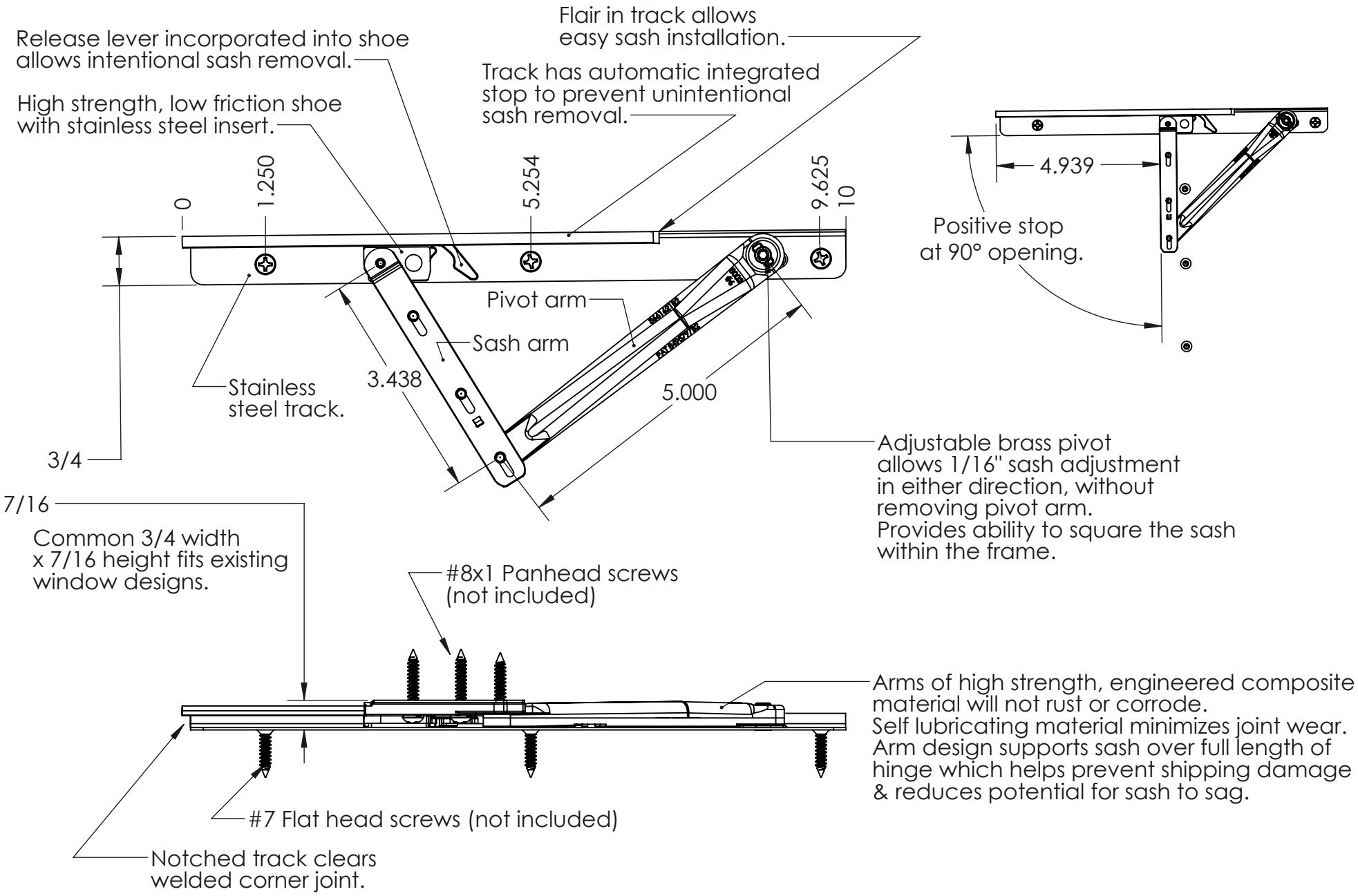
83164-L07 #6 Arm & Track assembly