- PLANS TO BE DESIGNED UNDER 2018 NORTH CAROLINA RESIDENTIAL CODE.
- HOUSE DESIGNED FOR 115 MPH 3 SECOND GUST (89 FASTEST WIND) , EXPOSURE B
- ANCHOR BOLTS SHALL BE MIN. 1/2" DIAMETER & SHALL EXTEND A MINIMUM 7" INTO MASONRY OR CONCRETE
- ANCHOR BOLTS TO BE NO MORE THAN 6' O.C. AND WITHIN 12" OF THE CORNER
- WALL BRACING IS REQUIRED . DESIGNER MUST SPECIFY METHOD OF BRACING PER SECTION R602 (NC 2018 RESIDENTIAL BUILDING CODE) AND PROVIDE DETAIL

MEAN ROOF HEIGHT = < 30'-0"

COMPONENT & CLADDING DESIGNED FOR THE FOLLOWING LOADS

MEAN ROOF HEIGHT	UP TO 30'	30'-1" - 35'	35'-1" - 40'	40'-1" - 45'
ZONE 1	16.5, -18.0	17.3, -18.9	18.0, -19.6	18.5, -20.2
ZONE 2	16.5, -21.0	17.3, -22.1	18.0, -22.9	18.5, -23.5
ZONE 3	16.5, -21.0	17.3, -22.1	18.0, -22.9	18.5, -23.5
ZONE 4	18.0, -19.5	18.9, -20.5	19.6, -21.3	20.2, -21.8
ZONE 5	18.0, -24.1	18.9, -25.3	19.6, -26.3	20.2, -27.0

MINIMUM VALUES FOR ENERGY COMPLIANCE:

ZONE 4
MAX GLAZING U-FACTOR = 0.35
CEILING R-38 WALLS R-15 FLOORS R-19

NOTE: PLANS DESIGNED UNDER 2018 NORTH CAROLINA RESIDENTIAL CODE.

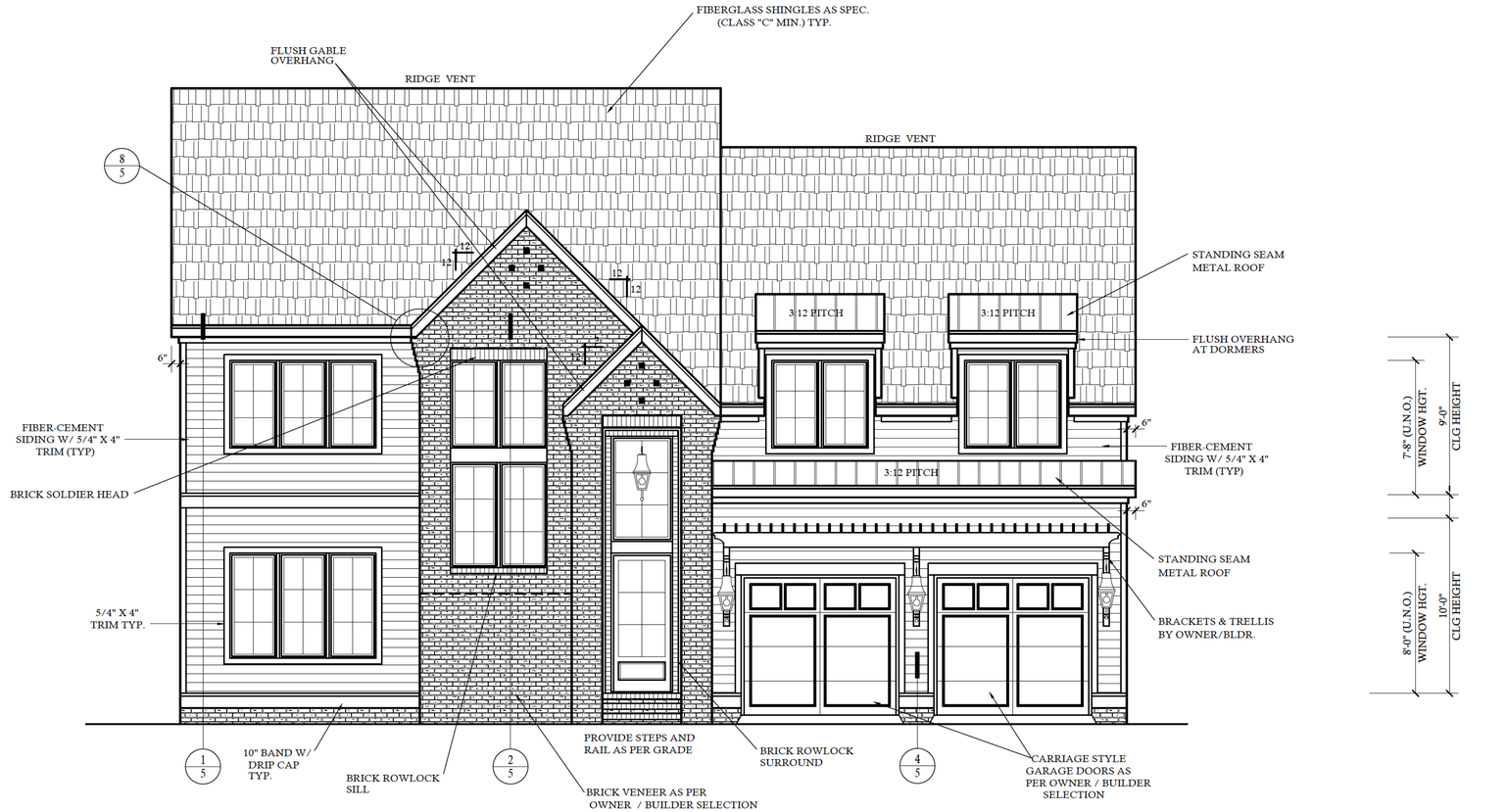

FRONT ELEVATION

SCALE: 1/4"=1'-0"

LIST OF ABBREVIATIONS

CLG. : CEILING
HGT. : HEIGHT
D.O. : DOUBLE OVEN
WD. : WOOD
CONT.:CONTINUOUS
CONC. : CONCRETE
COL. : COLUMN
ELLIP. : ELLIPSE
W/ : WITH
TRANS. : TRANSOM
CANT. : CANTILEVER
M.O. : MASONRY OPENING
5S= 5 SHELVES
1R/1S = 1 ROD AND 1 SHELF
2R/2S =2 RODS AND 2 SHELVES
SD= SMOKE DETECTOR
CMD= CARBON MONOXIDE DETECTOR
ABV. : ABOVE
C.O. : CASED OPENING
REFG. : REFRIGERATOR
D.W. : DISHWASHER
T.B.D.: TO BE DETERMINED
W.I.C. : WALK IN CLOSET
W : WASHER
D : DRYER
SHWR. : SHOWER
DN. : DOWN
K.S. : KNEE SPACE
TYP. : TYPICAL

GENERAL PLAN NOTES

1.) SEE CHAPTER 6 OF 2018 NCRC FOR WALL CONSTRUCTION.

2.) TEMPERED GLASS TO BE USED AT ALL SAFETY REQUIRED LOCATIONS ACCORDING TO 2018 NCRC SECTION R308.4.

3.) DWELLING/GARAGE FIRE SEPARATION SHALL PER TABLE 302.6 OF 2018 NCRC.

4.) ALL HABITABLE ROOMS SHALL MEET LIGHT/VENTILATION & EGRESS AS REQUIRED IN 2018 NCRC SECTIONS R303.1 AND R310

5.) ALL ANGLED WALLS ARE 45° UNLESS NOTED OTHERWISE.

6.) VERIFY ALL WINDOW SIZES, RADIUS, AND DETAILS WITH CHOSEN MANUFACTURE.

7.) LOCATE DORMER FACE TO ALLOW 4" MIN. BELOW WINDOW FRAME.

8.) FLOOR PLAN NOTATIONS GOVERN OVER ELEVATION SCALE.

9.) ALL CABINET DESIGNS/LAYOUTS TO BE VERIFIED WITH OWNER VIA SHOP DRAWINGS FROM CABINET MANUF.

10.) ALL FLOOR COVERINGS AND FINISHES BY OWNER/ BLDR. COORDINATE HEIGHTS DUE TO THICKNESS CHANGES.

11.) ALL WINDOW GLAZING TO HAVE 0.32 U-FACTOR MIN. SEE TABLE E-4A, E-4B

12.) FINISHES OF SCREEN PORCH COLUMNS,RAILS, FLOORS , CEILINGS ;SCREEN DOOR SYSTEM,AND DOOR TO PORCH BY BLDR. & OWNER, PER CONTRACT SPECIFICATIONS

13.) FINISHES FOR CLOSET SHELVING AND ROD BY BLDR. & OWNER, PER CONTRACT SPECIFICATIONS

14.) FINISHES OF ALL INTERIOR BASE BOARD , CLG. DETAIL / MOLDING ,OPENING DETAILS ,PASS-THRUS ,WAINSCOTTING DETAILS BY BLDR. & OWNER, PER CONTRACT SPECIFICATIONS

ACCESSORIES LEGEND

PROVIDE BLOCKING FOR:

TB = TOWEL BAR
TP = TOILET PAPER
TR = TOWEL RING
MR = MAGAZINE RACK
MC = MEDICINE CABINET

NOTE:
SELECTION BY OWNER PER BUILDER CONTRACT SPECIFICATIONS

NOTE:
-SEE ROOF PLAN FOR KNEEWALL HEIGHTS AND LOCATIONS.

-GRADE LINES ARE ASSUMED. VERIFY WITH FINAL GRADING PLAN.

AREA CALCULATIONS

HEATED (SQ. FT.)		UNHEATED (SQ. FT.)	
1ST FLOOR:	2056	GARAGE:	568
2ND FLOOR:	1112	COV. PORCH:	218
REC ROOM:	364	PORCH:	31
		BRICK:	7
TOTAL: (HEATED)	3532	TOTAL: (UNHEATED)	824
OVERALL DIMENSION		UNFINISHED (SQ. FT.)	
WIDTH:	54'-0"		
DEPTH:	63'-5"		

©COPYRIGHT, 2024 BY DESIGN TECH, INC. ALL RIGHTS RESERVED. NO PART OF THESE PLANS MAY BE USED, REPRODUCED, STORED IN A RETRIEVAL SYSTEM, OR TRANSMITTED IN ANY FORM BY ANY MEANS, ELECTRONIC, MECHANICAL PHOTOCOPYING,RECORDING, OR OTHERWISE WITHOUT THE PERMISSION OF DESIGN TECH INC.

CONTRACTOR SHALL VERIFY ALL CONDITIONS AND DIMENSIONS PRIOR TO CONSTRUCTION. ANY ERROR OR OMISSIONS SHALL BE REPORTED TO DESIGN TECH IMMEDIATELY. NO CONSTRUCTION JUSTIFICATION. CONTRACTOR MUST COMPLY WITH ALL CODES AND ORDINANCES WHEN HOME IS TO BE BUILT. IF NO ENGINEERING DRAWINGS ARE PROVIDED, CONTRACTOR MUST CONTACT ENGINEER TO VERIFY STRUCTURAL DESIGN. ONCE CONSTRUCTION HAS BEGUN, CONTRACTOR WILL ASSUME ALL RESPONSIBILITY. PLAN HAS BEEN DESIGNED TO COMPLY WITH 2018 NCRC.

REVISIONS:

DATE:	NAME:

DRAWN BY: RKR
CHECKED BY:
DATE: 4-22-24
PLAN NO. 20-3532-DT

DESIGNTECH INC.
130 WIND CHIME CT.
UNIT A
RALEIGH, NC 27615
919-239-4072
WWW.DESIGN-TECH.COM

SHEET NO. 1 OF 6

COPYRIGHT 2024 BY DESIGN TECH, INC. ALL RIGHTS RESERVED. NO PART OF THESE PLANS MAY BE USED, REPRODUCED, STORED IN A RETRIEVAL SYSTEM, OR TRANSMITTED IN ANY FORM BY ANY MEANS, ELECTRONIC, MECHANICAL PHOTOCOPYING, RECORDING, OR OTHERWISE WITHOUT THE PERMISSION OF DESIGNTECH INC

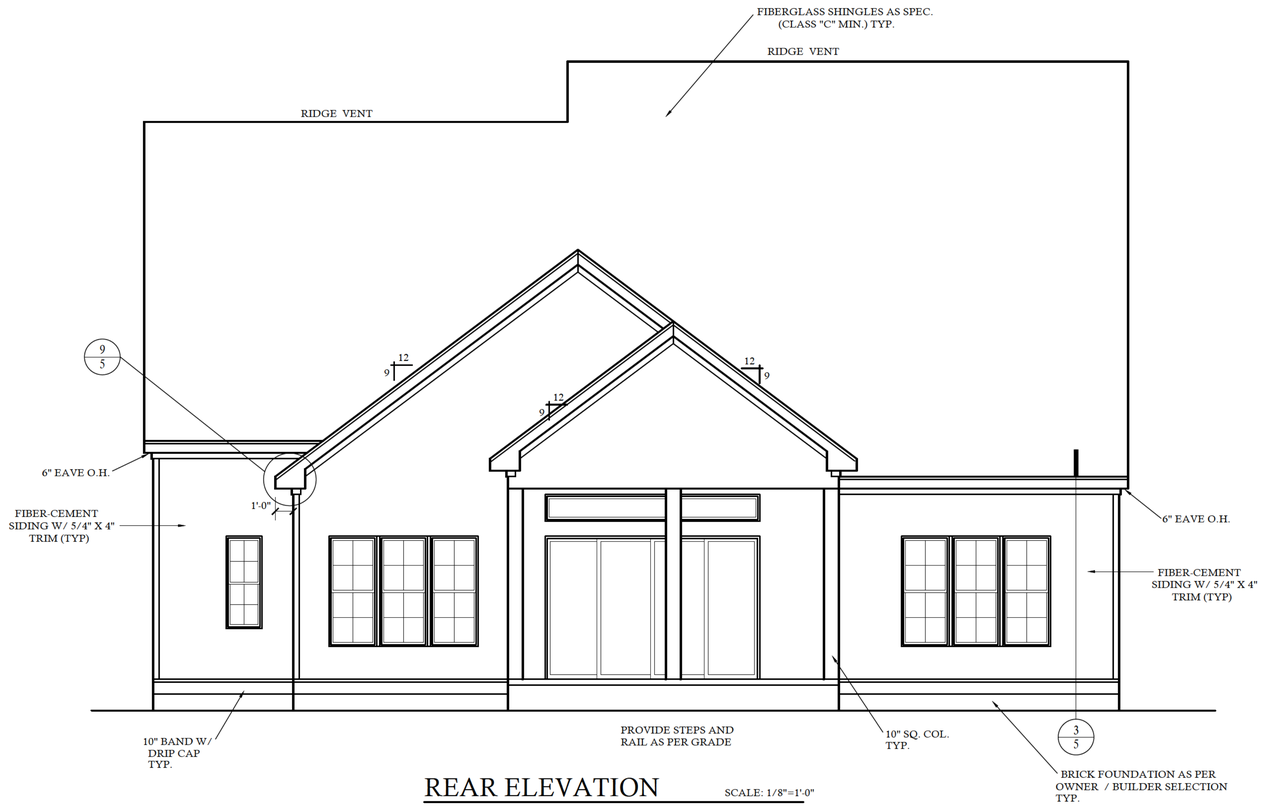

REAR ELEVATION SCALE: 1/8"=1'-0"

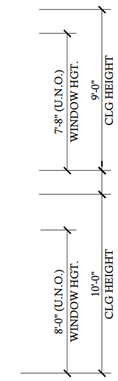

NOTE:
SEE ROOF PLAN FOR KNEEWALL HEIGHTS AND LOCATIONS.

NOTE:
GRADE LINES ARE ASSUMED. VERIFY WITH FINAL GRADING PLAN.

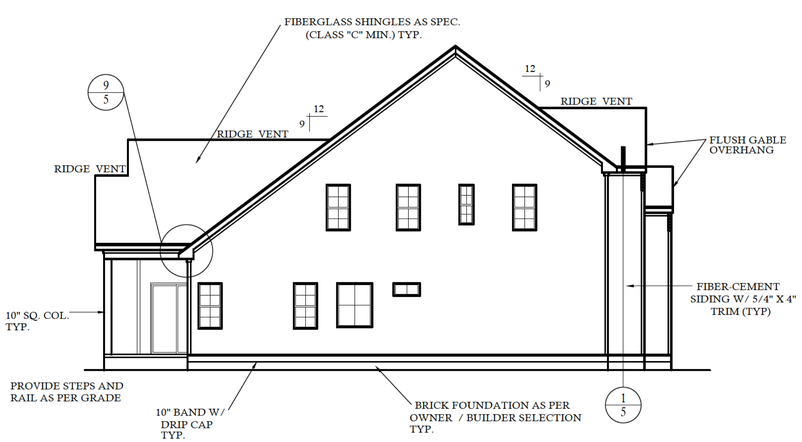

LEFT SIDE ELEVATION SCALE: 1/8"=1'-0"

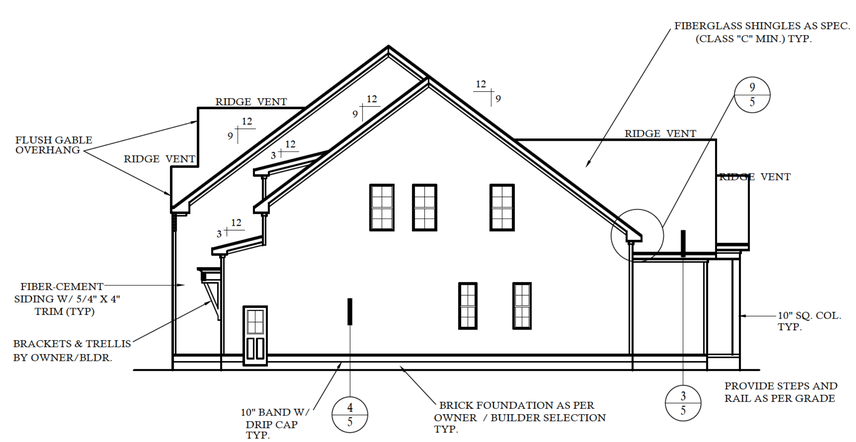

RIGHT SIDE ELEVATION SCALE: 1/8"=1'-0"

CONTRACTOR SHALL VERIFY ALL CONDITIONS AND DIMENSIONS PRIOR TO CONSTRUCTION. ANY ERROR OR OMISSIONS SHALL BE REPORTED TO DESIGNTECH, INC. PRIOR TO CONSTRUCTIONS JUSTIFICATION. CONTRACTOR MUST COMPLY WITH ALL CODES AND ORDINANCES WHERE HOME IS TO BE BUILT. IF NO ENGINEERING DRAWINGS ARE PROVIDED, CONTRACTOR MUST CONSULT WITH A POWER PLANT ON STRUCTURAL DESIGN. ONCE CONSTRUCTION HAS BEGUN, CONTRACTOR WILL ASSUME ALL RESPONSIBILITY.
PLAN HAS BEEN DESIGNED TO COMPLY WITH 2018 IRC.

REVISIONS:

DATE:	NAME:

DRAWN BY:
RKR
CHECKED BY:

DATE:
4-22-24
PLAN NO.
20-3532-DT

DESIGNTECH INC.
130 WIND CHIME CT.
UNIT A
RALEIGH, NC 27615
919-239-4072
WWW.DESIGNTECH.COM

20-3532-DT

SHEET NO. 2 OF 6

COPYRIGHT 2024 - BY DESIGN TECH, INC. ALL RIGHTS RESERVED. NO PART OF THESE PLANS MAY BE USED, REPRODUCED, STORED IN A RETRIEVAL SYSTEM, OR TRANSMITTED IN ANY FORM BY ANY MEANS, ELECTRONIC, MECHANICAL PHOTOCOPYING, RECORDING, OR OTHERWISE WITHOUT THE PERMISSION OF DESIGNTECH INC.

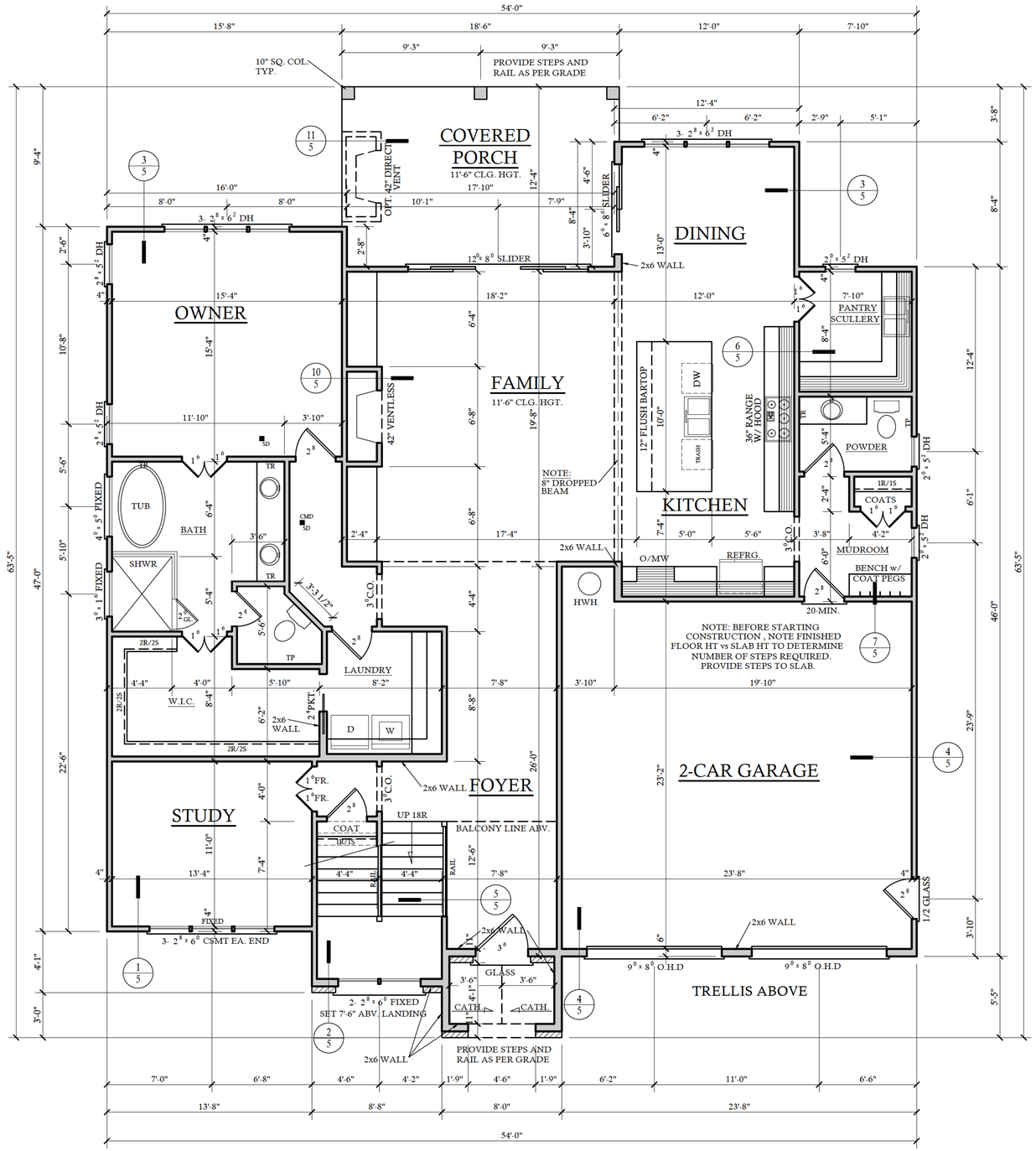

FIRST FLOOR PLAN

SCALE: 1/4"=1'-0"

10'-0" CLG. HGT. U.N.O.
SET WINDOWS @ 8'-0" U.N.O.

CONTRACTOR SHALL VERIFY ALL CONDITIONS AND DIMENSIONS PRIOR TO CONSTRUCTION. ANY ERROR OR OMISSIONS SHALL BE REPORTED TO DESIGNTECH BEFORE CONSTRUCTION OR JUSTIFICATION. CONTRACTOR MUST COMPLY WITH ALL CODES AND ORDINANCES WHEN HOME IS TO BE BUILT. IF NO ENGINEERING DRAWINGS ARE PROVIDED, CONTRACTOR MUST CONSULT WITH LOCAL INSPECTOR FOR STRUCTURAL DESIGN. ONCE CONSTRUCTION HAS BEGUN, CONTRACTOR WILL ASSUME ALL RESPONSIBILITY. THIS PLAN HAS BEEN DESIGNED TO COMPLY WITH 2018 IRC.

REVISIONS:

DATE:	NAME:

DRAWN BY: RKR
CHECKED BY:
DATE: 4-22-24
PLAN NO. 20-3532-DT

DESIGNTECH INC.
130 WIND CHIME CT.
UNIT A
RALEIGH, NC 27615
919-239-4072
WWW.DESIGNTECH.COM

20-3532-DT

SHEET NO. 3 OF 6

COPYRIGHT 2024 BY DESIGN TECH, INC. ALL RIGHTS RESERVED. NO PART OF THESE PLANS MAY BE USED, REPRODUCED, STORED IN A RETRIEVAL SYSTEM, OR TRANSMITTED IN ANY FORM BY ANY MEANS, ELECTRONIC, MECHANICAL, PHOTOCOPYING, RECORDING, OR OTHERWISE WITHOUT THE PERMISSION OF DESIGNTECH INC.

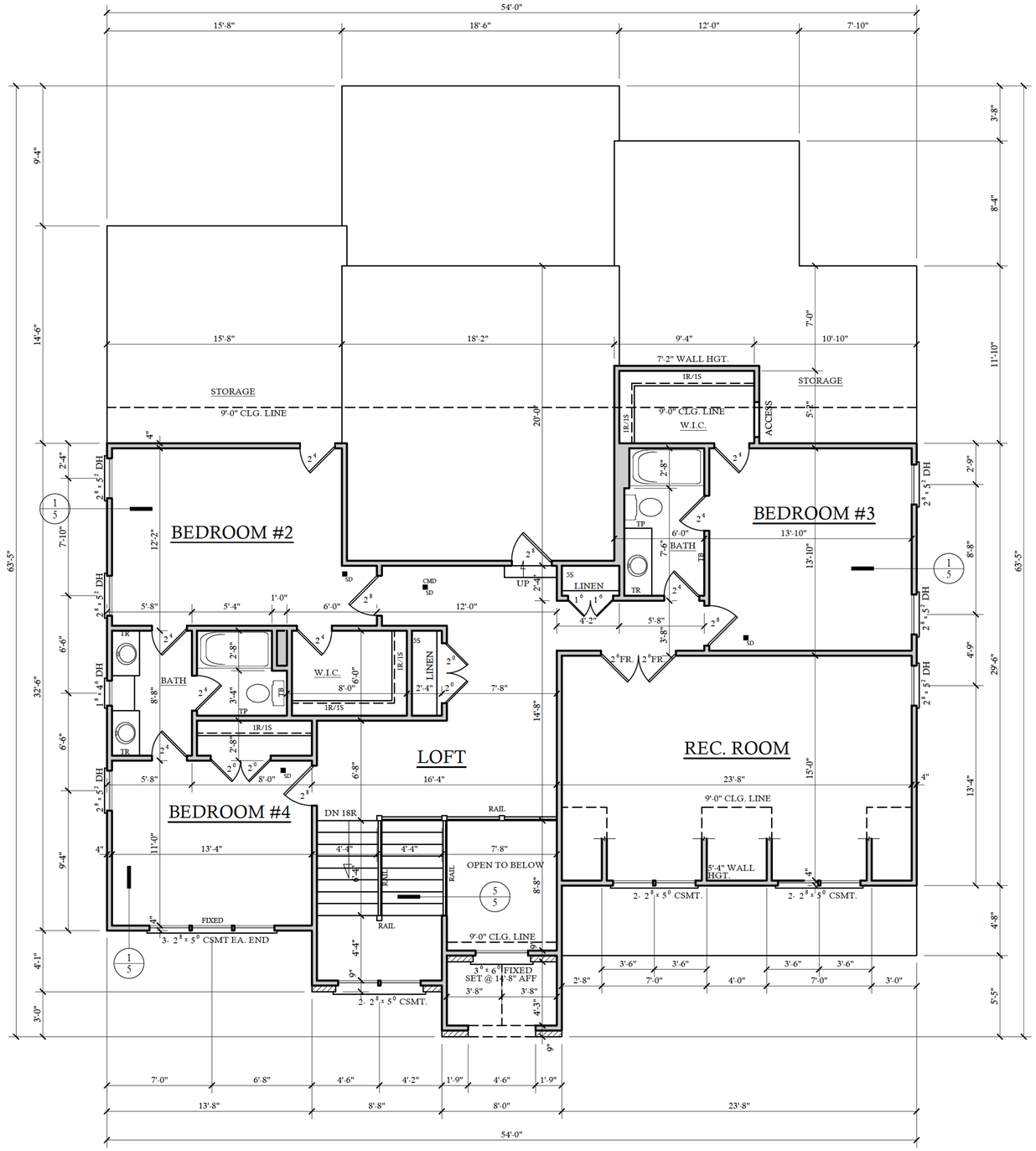

SECOND FLOOR PLAN

SCALE: 1/4"=1'-0"

9'-0" CLG. HGT. U.N.O.
SET WINDOWS @ 7'-8" U.N.O.

CONTRACTOR SHALL VERIFY ALL CONDITIONS AND DIMENSIONS PRIOR TO CONSTRUCTION. ANY ERROR OR OMISSIONS SHALL BE REPORTED TO DESIGNTECH PRIOR TO CONSTRUCTION. JUSTIFICATION: CONTRACTOR MUST COMPLY WITH ALL CODES AND ORDINANCES WHEN HOME IS TO BE BUILT. IF NO ENGINEERING DRAWINGS ARE PROVIDED, CONTRACTOR MUST CONSULT WITH LOCAL INSPECTOR FOR STRUCTURAL DESIGN. ONCE CONSTRUCTION HAS BEGUN, CONTRACTOR WILL ASSUME ALL RESPONSIBILITY. THIS PLAN HAS BEEN DESIGNED TO COMPLY WITH 2018 IRC.

REVISIONS:

DATE:	NAME:

DRAWN BY: RKR
CHECKED BY:
DATE: 4-22-24
PLAN NO. 20-3532-DT

DESIGNTECH INC.
130 WIND CHIME CT.
UNIT A
RALEIGH, NC 27615
919-239-4072
WWW.DESIGNTECH.COM

20-3532-DT

SHEET NO. 4 OF 6

COPYRIGHT 2024 BY DESIGN TECH, INC. ALL RIGHTS RESERVED. NO PART OF THESE PLANS MAY BE USED, REPRODUCED, STORED IN A RETRIEVAL SYSTEM, OR TRANSMITTED IN ANY FORM BY ANY MEANS, ELECTRONIC, MECHANICAL PHOTOCOPYING, RECORDING, OR OTHERWISE WITHOUT THE PERMISSION OF DESIGNTECH INC.

MATERIAL REFERENCE

1. CONT. POURED CONC. FOOTING
2. 4 X 8 X 16 C.M.U.
3. 6 X 8 X 16 C.M.U.
4. 8 X 8 X 16 C.M.U.
5. 12 X 8 X 16 C.M.U.
6. BRICK
7. SOLID MASONRY CAP
8. 4" CONCRETE SLAB
9. 6 MIL VAPOR BARRIER
10. 4" STONE BASE
11. 4" X 6" 10.10 W.W.M
12. 2 X 4 TREATED SILL PLATE
13. 2 X 6 TREATED SILL PLATE
14. 2 X 6 JOIST
15. 2 X 6 BAND
16. 2 X 8 JOIST
17. 2 X 8 BAND
18. 2 X 10 JOIST
19. 2 X 10 BAND
20. A.P.A. RATED SUB-FLOOR
21. A.P.A. RATED UNDERLAYMENT
22. 2 X 4 SOLE PLATE
23. 2 X 4 STUD WALL
24. DBL 2 X 4 TOP PLATE
25. 2 X 6 SOLE PLATE
26. 2X 6 STUD WALL
27. DBL 2 X 6 TOP PLATE
28. EXTERIOR SHEATHING
29. SHEATHING PAPER
30. 1/2" DRY WALL
31. R-15 BATT INSULATION MIN.
32. BRICK VENEER
33. WALL TIE
34. WEEP HOLES @ 16" O.C. HORZ.
35. FLASHING AS REQ. PER CODE
36. SELF FURRING GALV METAL LATH
37. METAL BEAD
38. STUCCO PLASTER
39. SIDING AS SPECIFIED
40. TPL 2 X BLOCKING
41. WOOD FILLER
42. 1 X FRIEZE BOARD
43. NAILER
44. LOOKOUT
45. 3/8" EXT PLYWOOD SOFFIT
46. SOFFIT VENT
47. SUB FASCIA
48. 1 X FASCIA
49. METAL DRIP STRIP
50. SHINGLES AS SPECIFIED
51. 15 LB. FELT PAPER
52. A.P.A. RATED SHEATHING
53. 2 X 8 RAFTER
54. 2 X 6 RAFTER
55. R-38 BATT INSULATION MIN.
56. C.M.U. PIER
57. TREATED 2 X 6 SHIM PLATE
58. GIRDER SIZE PER PLAN
59. 2 X 2 LEDGER BOARD
60. 1/2" EXPANSION JOINT
61. 1 1/2" RIGID INSULATION (R 5.0 MIN)
62. WATERPROOFING
63. 4" PERFORATED DRAIN TILE (SLOPE TO DRAIN)
64. CRUSHED STONE W/ INFILTRATION BARRIER ABOVE
65. CONC. WASH
66. 2 X 4 RAFTER TIE BACKS PER ENG SPECS. AT MIN EVERY THIRD RAFTER
67. SEE STRUCTURAL SHEETS FOR FOR JOIST DIRECTION & SIZES
68. R-19 BATT INSULATION (MIN.)
69. POURED CONC. FND. WALL
70. OPT. TRIM SEE BLDR.
71. STONE VENEER
72. TRUSSES PER MANUFACTURER
73. STUCCO DRIP CAP
74. STUCCO ON CMU OR CONCRETE WALL
75. BAND W/ DRIP CAP
76. SOFFIT BED MOLD TRIM
77. 2 X 8 TREATED SILL PLATE
78. 2 X 12 JOIST
79. 2 X 12 BAND
80. 66 MIL. OF THRU WALL FLASHING

BRICK
CONC. MASONRY UNIT
CONCRETE
STEEL
EARTH
BATT INSULATION
RIGID INSULATION
STUCCO
WOOD
STONE
GRAVEL BED
WELDED WIRE MESH
DETAIL NUMBER / SHEET NUMBER
INT ELEV LETTER
INT ELEV NUMBER / SHEET NUMBER
SECTION NUMBER / SHEET NUMBER
12 ROOF PITCH RATIO
101 ROOM NUMBER

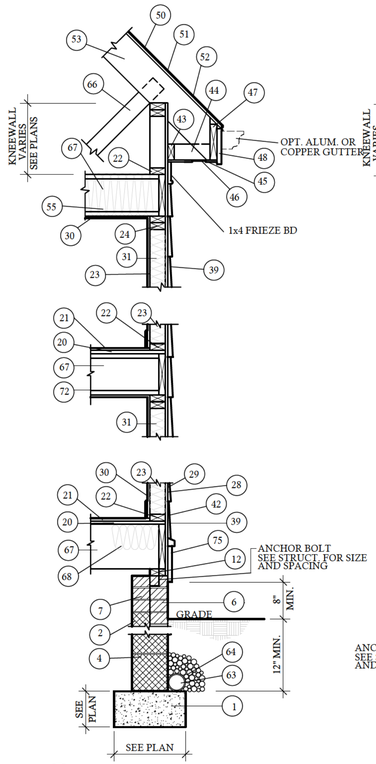

1 TWO STORY WALL W/ SIDING @ 3/4"=1'-0"
PROPERTY OF DESIGN TECH INC.
DESIGNED FOR 115 MPH WINDS

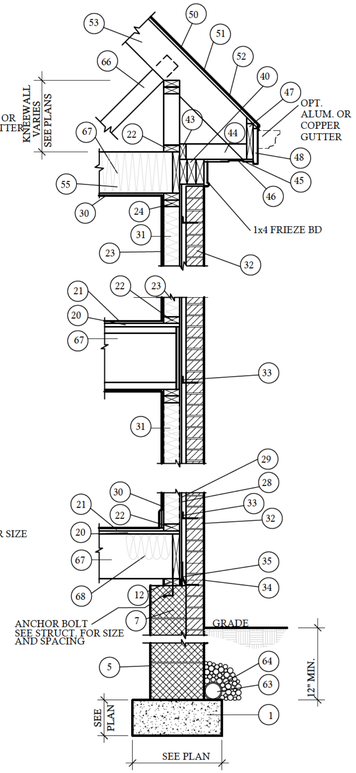

2 TWO STORY WALL W/ BRICK @ 3/4"=1'-0"
PROPERTY OF DESIGN TECH INC.
DESIGNED FOR 115 MPH WINDS

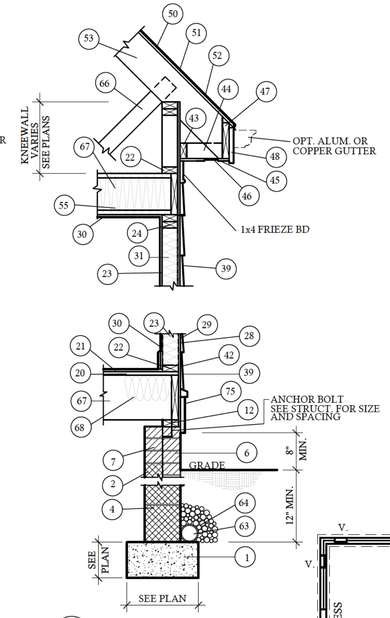

3 ONE STORY WALL W/ SIDING @ 3/4"=1'-0"
PROPERTY OF DESIGN TECH INC.
DESIGNED FOR 115 MPH WINDS

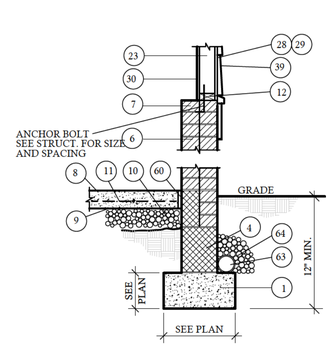

4 GARAGE WALL W/ SIDING @ 3/4"=1'-0"
PROPERTY OF DESIGN TECH INC.
DESIGNED FOR 115 MPH

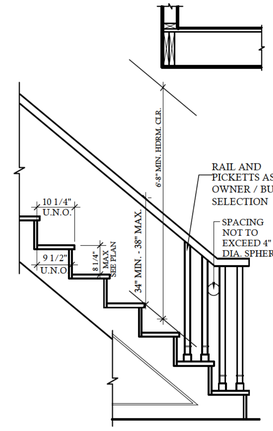

5 TYP. STAIR DETAIL @ 3/4"=1'-0"
PROPERTY OF DESIGN TECH INC.

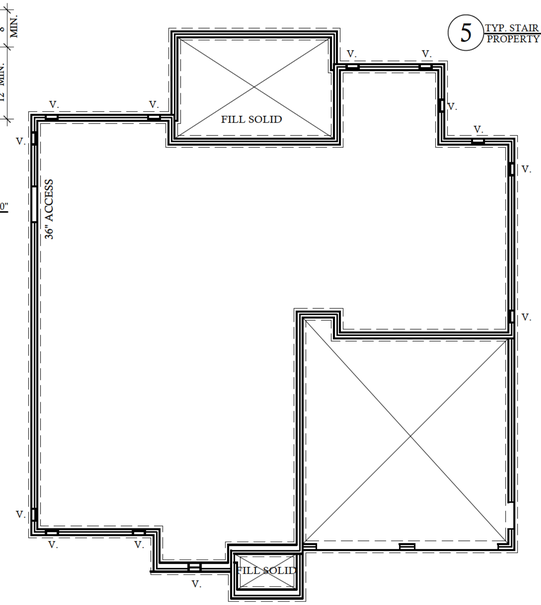

FOUNDATION VENT PLAN

SCALE: 1/8"=1'-0"

-VENT LOCATIONS ARE TO BE VERIFIED PRIOR TO CONSTRUCTION W/ BUILDER BASED ON SECTION R-408 IN THE 2018 NCRC.

-CRAWL SPACE TO HAVE A MIN. OF 24" OF CLEAR SPACE ABOVE GRADE.

-A MIN. OF 36" OF CLEAR SPACE ABOVE GRADE IS NEEDED WHEN HVAC UNIT IS LOCATED IN CRAWL, PROVIDE A CLEAR PATH FROM ACCESS TO THE HVAC UNIT.

FOUNDATION VENT CALCS.

$\frac{1906 \text{ SQ. FT.}}{1500}$ 1.27 MINIMUM NET AREA OF VENTILATION OPENING REQ'D

$\frac{1.27 \text{ SQ. FT.}}{.56}$ = 2 VENTS REQUIRED - (13) VENTS PROVIDED

NOTE: FIGURE BASED ON SECTION R-408.1.1 OF THE 2018 NCRC.

NOTE: FND VENT SPECS BASED ON PUSH/PULL POLYPROPYLENE FND. VENT THAT ALLOWS 72 SQ. IN. OF NET FREE AREA PER VENT.

NOTE: ONE VENTILATION OPENING SHALL BE WITHIN 3 FEET OF EACH CORNER OF THE BUILDING PER R-408.1.2 2018 NCRC . THE REMAINING VENTS LOCATED TO PROVIDE CROSS VENTILATION OF THE CRAWL SPACE .

EXCEPTIONS:

1 QUANTITY OF VENTS CAN BE REDUCED .

WHEN AN APPROVED VAPOR RETARDER MATERIAL IS USED IN ACCORDANCE WITH SECTION 408.2 OF THE 2018 NCRC . THE MINIMUM NET AREA OF VENTILATION OPENINGS SHALL NOT BE LESS THAN 1 SQUARE FOOT FOR EACH 1500 SQUARE FEET OF UNDER FLOOR SPACE AREA. ONE VENTILATION OPENING SHALL BE WITHIN 3 FEET OF EACH CORNER OF THE BUILDING PER R-408.1.2 2018 NCRC . THE REMAINING VENTS LOCATED TO PROVIDE CROSS VENTILATION OF THE CRAWL SPACE .

2 FOUNDATION VENTS CAN BE ELIMINATED

IF CONDITIONS ARE MET AS PER SECTION R409 2018 NCRC

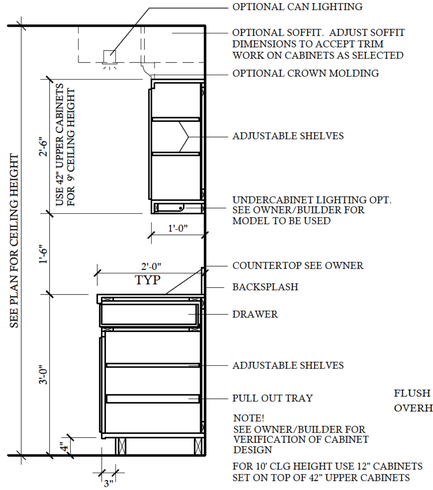

6 TYP. KITCHEN CABINET SECTION @ 3/4"=1'-0"
PROPERTY OF DESIGN TECH INC.

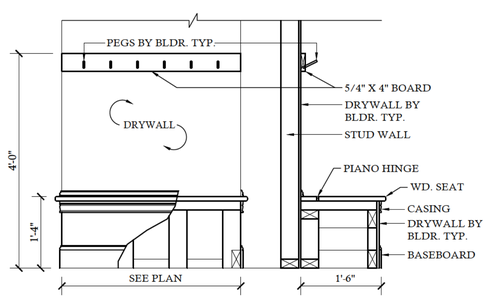

7 TYP. BENCH & PEGS SECTION @ 3/4"=1'-0"
PROPERTY OF DESIGN TECH INC.

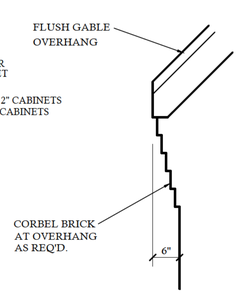

8 BOXING DETAIL @ 3/4"=1'-0"

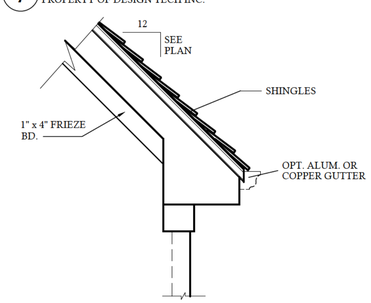

9 BOXING DETAIL @ 3/4"=1'-0"
PROPERTY OF DESIGN TECH INC.

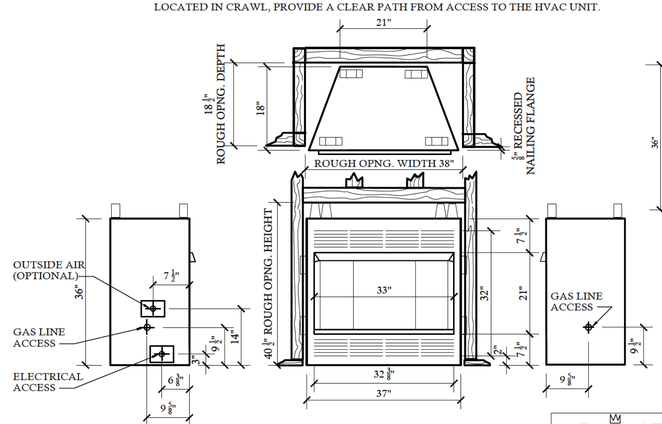

NOTE - VERIFY W/ MANUF. UNIT MODEL NO. & DIMENSIONS REQUIRED FOR FRAMING AROUND FIREPLACE UNIT PRIOR TO CONSTRUCTION

10 VENTLESS FIREPLACE NTS
PROPERTY OF DESIGN TECH INC.

MAJESTIC® fireplaces
FIRESTAGE SERIES
UV33 VENT-FREE

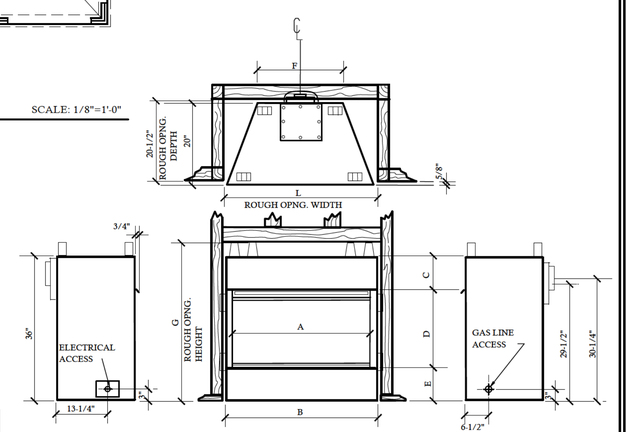

MAJESTIC® fireplaces
HISTYLE REAR VENT
DVBR36

11 DIRECT VENT FIREPLACE NTS
PROPERTY OF DESIGN TECH INC.

FIREPLACE DIMENSIONS

	A	B	C	D	E	F	G	H	J	K	L	M
DVBR36	36"	40"	6-3/8"	23-1/4"	6-3/8"	22"	40-1/2"	45-3/4"	45-3/4"	64-3/4"	41"	32-3/8"
DVBR42	42"	46"	6-3/8"	23-1/4"	5-3/8"	28"	40-1/2"	49"	49"	69-1/2"	47"	35-1/4"

NOTE - VERIFY W/ MANUF. UNIT MODEL NO. & DIMENSIONS REQUIRED FOR FRAMING AROUND FIREPLACE UNIT PRIOR TO CONSTRUCTION

CONTRACTOR SHALL VERIFY ALL CONDITIONS AND DIMENSIONS PRIOR TO CONSTRUCTION. ANY ERROR OR OMISSIONS SHALL BE REPORTED TO DESIGNER PRIOR TO CONSTRUCTION FOR JUSTIFICATION. CONTRACTOR MUST COMPLY WITH ALL LOCAL CODES AND ORDINANCES. HOME IS TO BE BUILT IF NO ENGINEERING DRAWINGS ARE PROVIDED, CONTRACTOR MUST SEE STRUCTURAL ENGINEER FOR ALL STRUCTURAL DESIGN. ONCE CONSTRUCTION BEGINS, CONTRACTOR WILL ASSUME ALL RESPONSIBILITY. CONTRACTOR WILL ASSUME PLAN HAS BEEN DESIGNED TO COMPLY WITH 2018 NCRC.

REVISIONS:

DATE:	NAME:

DRAWN BY: RKR
CHECKED BY:
DATE: 4-22-24
PLAN NO. 20-3532-DT

DESIGNTECH INC.
130 WIND CHIME CT.
UNIT A
RALEIGH, NC 27615
919-239-4072
WWW.DESIGNTECH.COM

20-3532-DT

SHEET NO. 5 OF 6

COPYRIGHT 2020-24 BY DESIGN TECH INC. ALL RIGHTS RESERVED. NOT PART OF THESE PLANS MAY BE USED, REPRODUCED, STORED IN A RETRIEVAL SYSTEM, OR TRANSMITTED IN ANY FORM BY ANY MEANS, ELECTRONIC, MECHANICAL, PHOTOCOPYING, RECORDING, OR OTHERWISE WITHOUT THE PERMISSION OF DESIGNTECH INC.

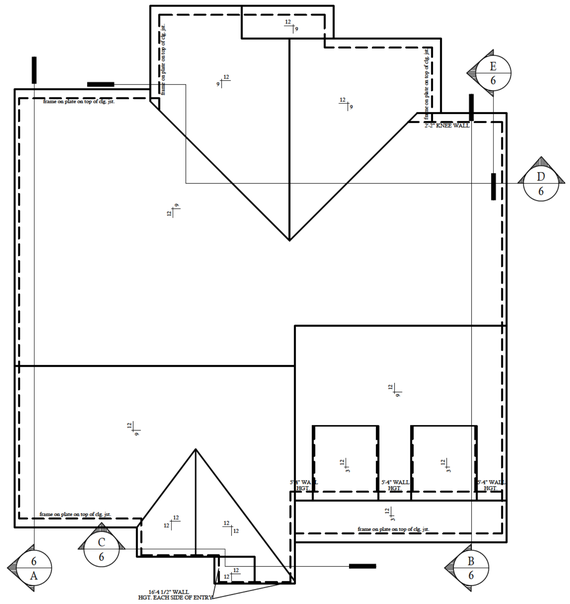

ROOF FRAMING PLAN

SCALE : 1/8"=1'-0"

ROOF VENTILATING REQUIREMENTS

SQ.FT. OF AREA VENTILATED $\frac{2889}{150}$ (144) = 2773.44 TOTAL SQ. IN. OF ATTIC VENTILATION REQ'D

NOTE: FIGURE BASED ON SECTION R-806.2 OF THE 2018 NCRC .

MINIMUM NET FREE VENTILATING AREA IS PERMITTED TO BE REDUCED TO 1 TO 300 WHEN CONDITIONS ARE MET AS PER SECTION R806.2 OF THE 2018 NCRC

INLET:

2773.44 (.5) = 1386.72 SQ. IN. OF INLET VENTING REQ'D

OUTLET:

2773.44 (.5) = 1386.72 SQ. IN. OF OUTLET VENTING REQ'D

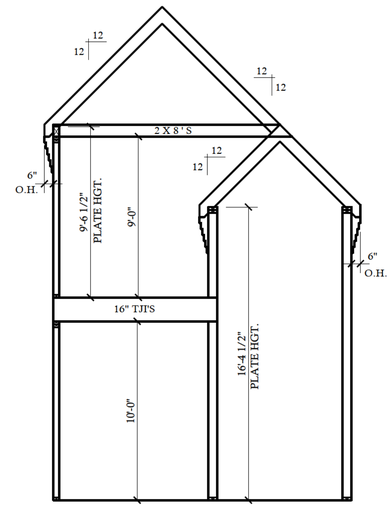

C BUILDING SECTION SCALE : 1/4"=1'-0"

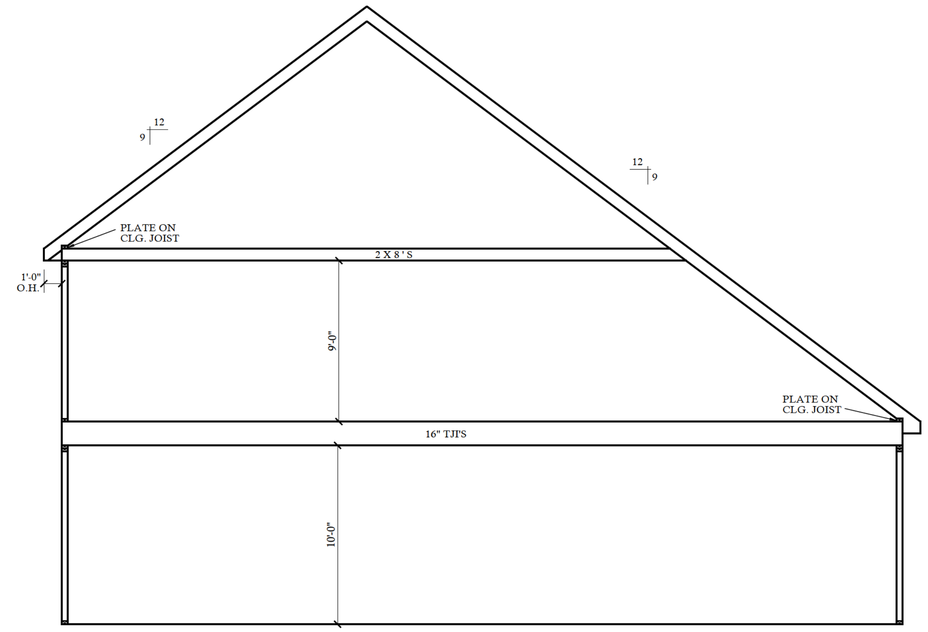

A BUILDING SECTION SCALE : 1/4"=1'-0"

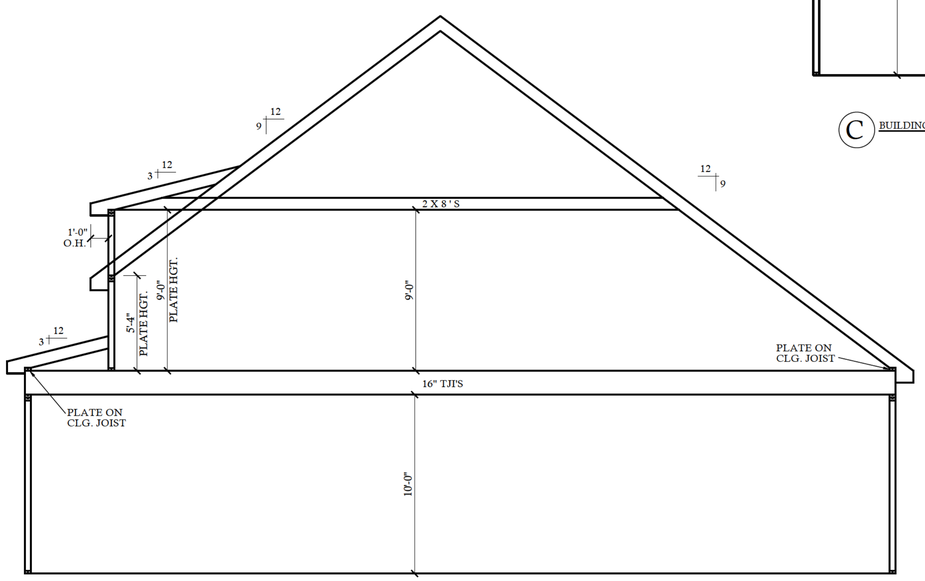

B BUILDING SECTION SCALE : 1/4"=1'-0"

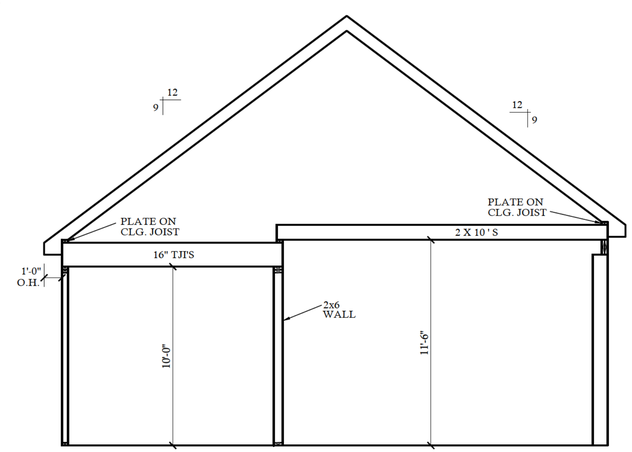

D BUILDING SECTION SCALE : 1/4"=1'-0"

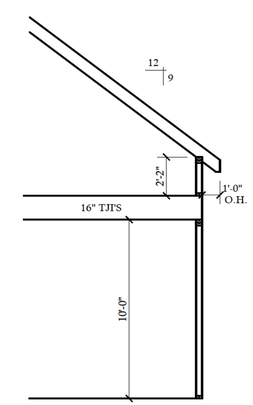

E BUILDING SECTION SCALE : 1/4"=1'-0"

CONTRACTOR SHALL VERIFY ALL CONDITIONS AND DIMENSIONS PRIOR TO CONSTRUCTION. ANY ERROR OR OMISSIONS SHALL BE REPORTED TO DESIGNTECH INC. PRIOR TO CONSTRUCTION. JUSTIFICATION: CONTRACTOR MUST COMPLY WITH ALL CODES AND REGULATIONS THE HOME IS TO BE BUILT IF NO ENGINEERING DRAWINGS ARE PROVIDED, CONTRACTOR MUST ASSUME ALL RESPONSIBILITY FOR STRUCTURAL DESIGN. ONCE CONSTRUCTION HAS STARTED, CONTRACTOR WILL ASSUME ALL RESPONSIBILITY. PLAN HAS BEEN DESIGNED TO COMPLY WITH 2018 NCRC.

REVISIONS:

DATE:	NAME:

DRAWN BY: RKR

CHECKED BY:

DATE: 4-22-24

PLAN NO. 20-3532-DT

DESIGNTECH INC.
130 WIND CHIME CT.
UNIT A
RALEIGH, NC 27615
919-239-4072
WWW.DESIGNTECH.COM

20-3532-DT

SHEET NO. 6 OF 6

COPYRIGHT 2020/24 BY DESIGN TECH, INC. ALL RIGHTS RESERVED. NO PART OF THESE PLANS MAY BE USED, REPRODUCED, STORED IN A RETRIEVAL SYSTEM, OR TRANSMITTED IN ANY FORM BY ANY MEANS, ELECTRONIC, MECHANICAL, PHOTOCOPYING, RECORDING, OR OTHERWISE WITHOUT THE PERMISSION OF DESIGNTECH INC.