United International
HYDRO ENGINEERING TECHNOLOGIES

VERTICAL SHAFT FLOATING AERATORS

PREMIUM QUALITY

GENERAL DESCRIPTION

Vertical Shaft Floating Aerators is a mechanical direct-drive unit designed to provide optimum oxygen transfer in a variety of municipal and industrial wastewater applications. The performance of the Vertical Shaft Floating Aerators also provides the mixing necessary to uniformly disperse oxygen and organic matter within the microbial population.

United International Hydro Engineering Technologies (UIHET) is a professional turnkey MEP Contracting Company in Saudi Arabia offering services including Mechanical, Electrical, Plumbing, Fire Fighting and Specialized Systems to all over MENA Region. Our Services are a perfect blend of cost-effectiveness, top-notch quality that's in par with industry standards and time bound MEP Engineering that is perfectly matched with our state of art infrastructures. Our Projects Management team is proficiently managed by trained, experienced and skilled Projects Managers who assume sole responsibility for satisfactorily completion of the project. We believe in working closely with our clients to make sure every detail of the project is taken care of.

FLOATING SYSTEM

Vertical shaft surface aerator floating system is a multi-armed system consisting of floats, central structure and assembly platform. Floats are made of carbon steel and epoxy coated materials. Float sizes and distances to the platform center are designed in accordance with Vertical shaft surface aerator's effective area. The system balanced by floats filled with ballast oil. Floating system arms are made of spirally welded carbon steel pipes which are epoxy coated. Arms are made fragmental for easy transportation and erection. Connection bolts and nuts are stainless steel. Epoxy coated carbon steel assembly platform is a part of Vertical shaft surface aerator's structure where aerated base plate is mounted. Carbon steel anchorage parts for tensioning ropes are provided by **UIHET** to be assembled on the aeration tank during civil works. **UIHET** also specifies the anchorage places on the aeration tank. Synthetic tension ropes and electrical cabling are water resistant. Tensioning rope lengths must be fixed when the aeration tank is empty.

FLOATING SYSTEM

Wastewater aeration is the process of introducing oxygen into wastewater to facilitate the aerobic bio-degradation of pollutants. Surface aerators agitate the wastewater vigorously, entraining air in the wastewater and causing a rapid change of the air-water interface to facilitate solution of the air. The oxygen-enriched water is dispersed and mixed, resulting in highly effective aeration. **UIHET** aerators provide high efficient aeration, while maintaining sufficient mixing in the basin.

Vertical shaft surface aerators consist of submerged or partially submerged impellers, which are mounted in the aeration tank. The simple mechanical structure consisting of actuator, shaft and fan allows easy operation. It can either be easily mounted on fixed bridge, or be attached to the side of the basin by means of a special barge system in cases where water level can vary.

FLOATING AERATORS SELECTION TABLE

Type	Rated Power (Kw)	Impeller Diameter (m)	Rotation Speed (rpm)	Peripheral Speed (m/s)	Immersion Depth (mm)	O2 Efficiency (kg/h)w	Effective Depth (m)	
							Max.	Min.
UISA-001.5	1.5	0.71	112	4.16	80	2.7	2.0	1.2
UISA-002.2	2.2	0.82	98	4.21	80	3.9	2.0	1.2
UISA-003.0	3.0	0.84	95	4.18	80	5.4	2.0	1.2
UISA-004.0	4.0	0.88	93	4.28	80	7.2	2.0	1.2
UISA-005.5	5.5	0.93	95	4.62	100	9.9	2.5	1.2
UISA-007.5	7.5	0.93	93	4.53	100	13.5	2.5	1.2
UISA-011.0	11.0	1.07	90	5.04	100	19.8	2.5	1.5
UISA-015.0	15.0	1.24	79	5.13	100	27.0	3.0	1.5
UISA-018.5	18.5	1.41	68	5.02	120	33.3	3.0	2.0
UISA-022.0	22.0	1.60	58	4.86	120	39.6	3.5	2.0
UISA-030.0	30.0	1.8	54	5.09	120	54.0	3.5	2.0
UISA-037.0	37.0	2.06	49	5.28	120	66.6	4.0	2.0
UISA-045.0	45.0	2.40	44	5.53	150	81.0	4.0	2.0
UISA-055.0	55.0	2.55	38	5.07	150	99.0	4.0	2.0
UISA-075.0	75.0	2.72	36	5.12	150	135.0	4.5	2.0
UISA-090.0	90.0	3.30	32	5.53	150	162.0	6.0	3.0
UISA-110.0	110.0	3.60	29	5.46	150	198.0	6.0	3.0
UISA-132.0	132.0	3.60	28	5.28	150	237.0	6.0	3.0
UISA-160.0	160.0	4.06	25	5.31	200	276.0	6.5	3.5
UISA-200.0	200.0	4.20	24	5.28	200	315.0	6.5	3.5
UISA-260.0	260.0	4.40	22	5.07	200	354.0	6.5	3.5
UISA-300.0	300.0	4.5	22	5.18	200	393.0	7.0	4.0
UISA-335.0	335.0	4.72	20	4.94	200	432.0	7.0	4.0
UISA-375.0	375.0	4.90	18	4.62	200	471.0	7.0	4.0

- ☑ All values are given for square or rectangular shaped basins similar to square. Our aerators can also be used in circular tanks by additional measures. In such a case, please refer to UIHET Sales Engineers.
- ☑ The ratio between tank length and water depth must be between 2/1 and 4/1 and maximum water depth should not be exceeded.
- ☑ Aerator efficiency will increase if the ratio between tank length and impeller diameter decreases.
- ☑ Besides tank dimensions, various criteria such as aerator location point and weir width may affect the aeration efficiency.
- ☑ We can also help you to find the right solution to your special requirements with bottom cones, suction nozzles, baffle assembly, etc.

FLOATING AERATORS COMPONENTS

Item No.	Vertical Shaft Surface Aerator Components
1	Drive unit
2	Mounting plate
3	Shaft
4	Fan
5	Coupling between shaft and reductor
6	Fastening materials

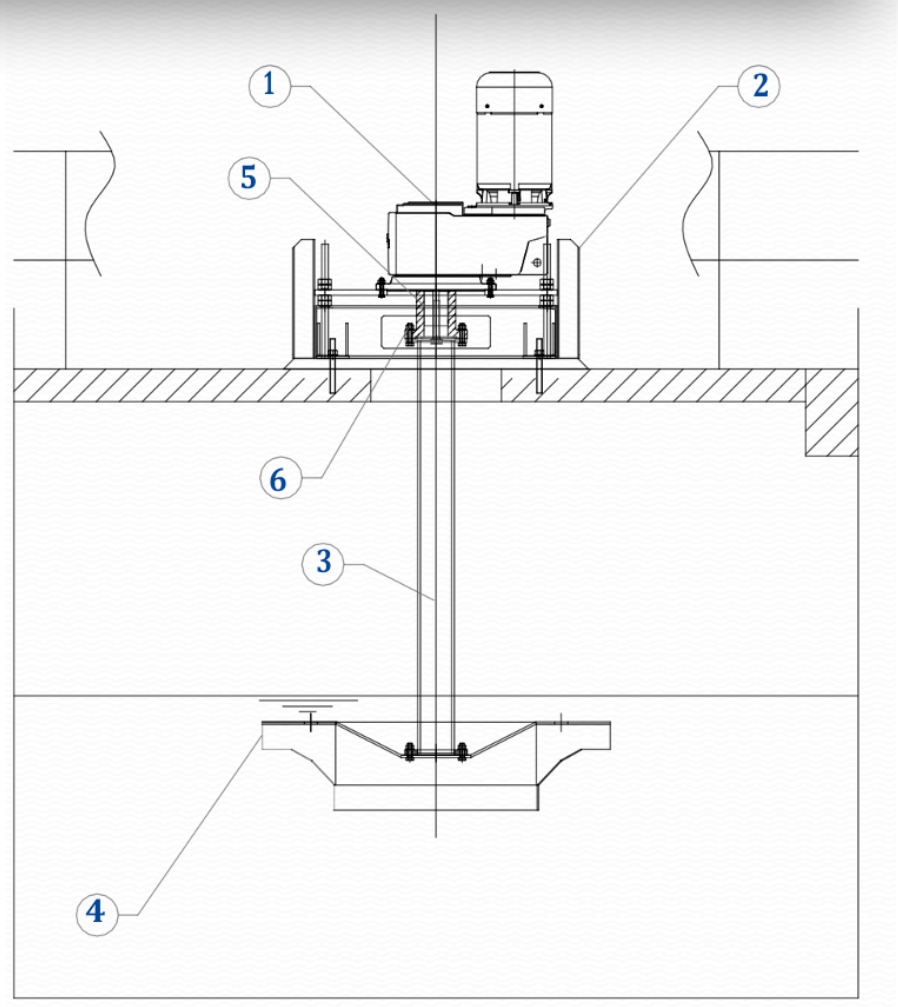

WHY CHOOSE UIHET FLOATING AERATORS?

- High strength Supper Duplex Stainless Steel Scraper
- Reliable and cost-effective
- Modular design for future expansions
- Vibration limiting design; velocity of 0.3 inches/second or less
- Proven oxygen and mixing performance
- Easy and flexible installation
- Short lead times
- Easily incorporated into existing plants
- Units are retrievable for easy access
- Various mooring arrangements available

HIGH QUALITY

United International
HYDRO ENGINEERING TECHNOLOGIES

www.uihydro.com eng@uihydro.com