Diagram 7 Audio Amplifier

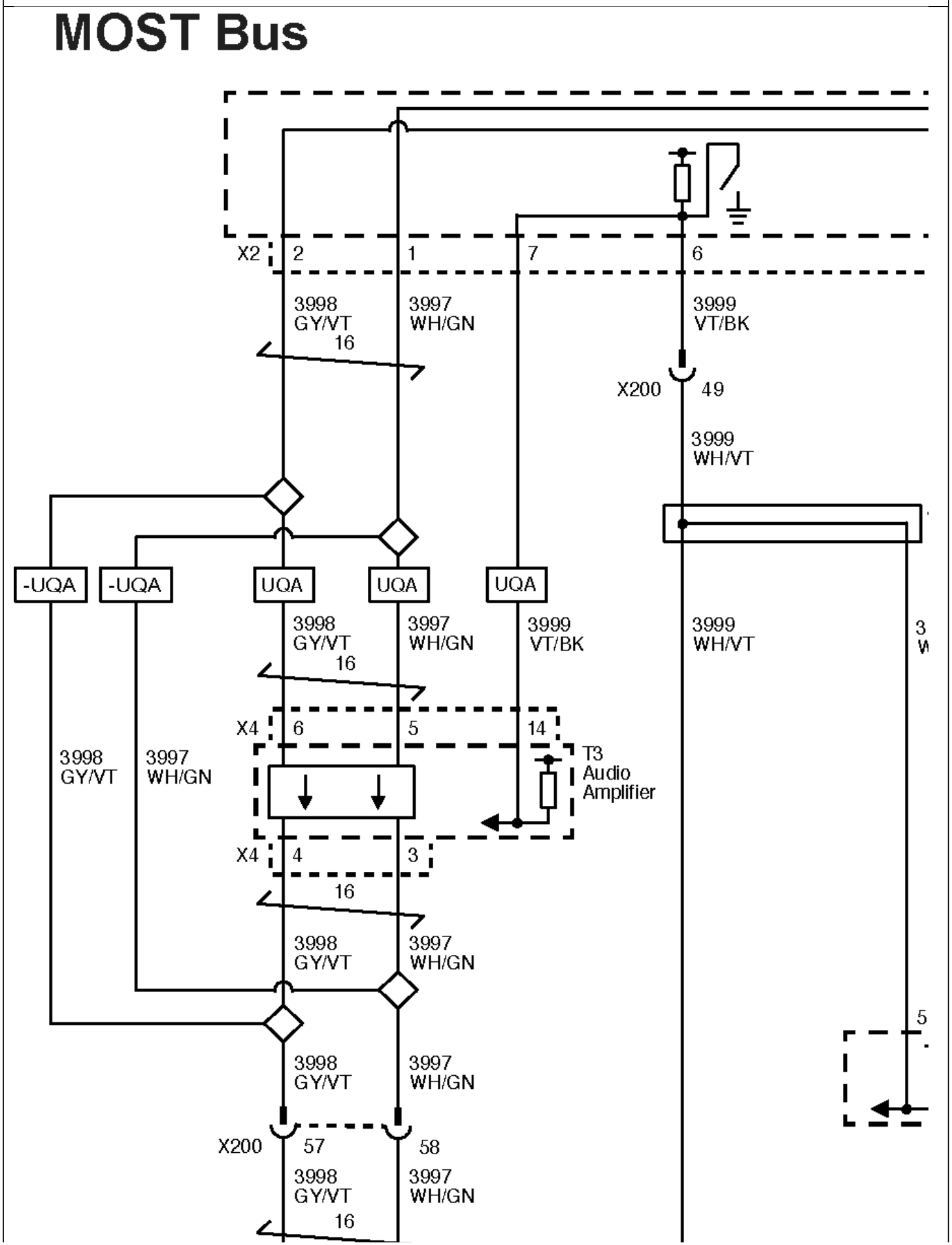

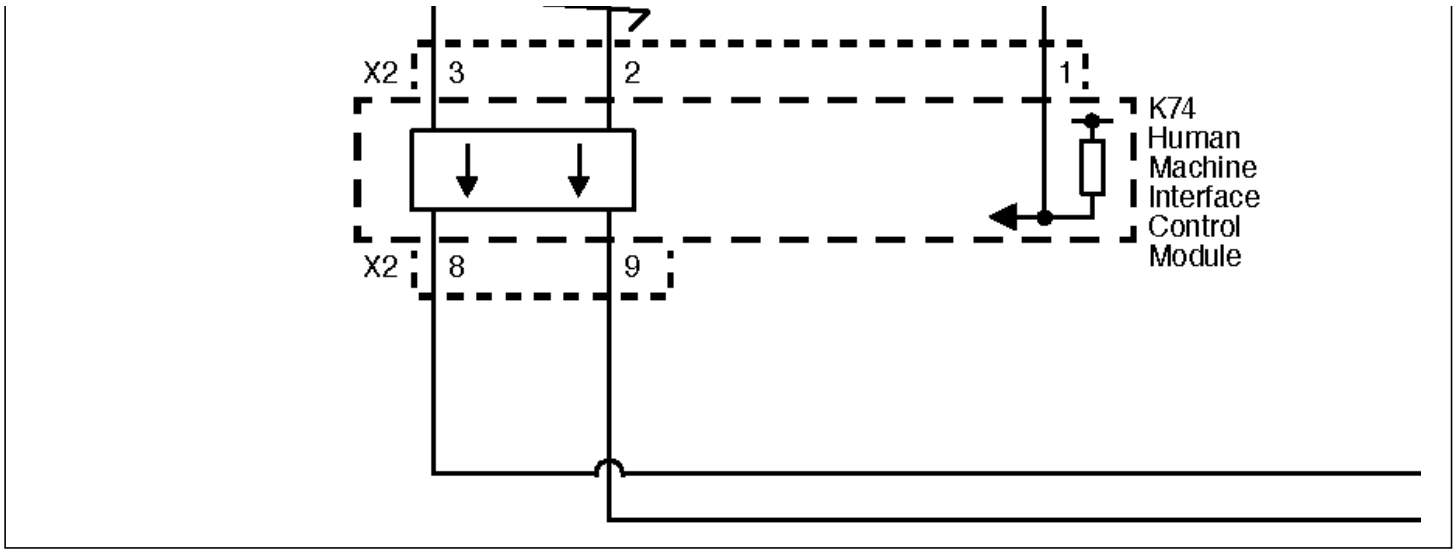
X2
3
2
1
K74
Human
Machine
Interface
Control
Module
X2
8
9