**Diagram 10 Body Control Module**
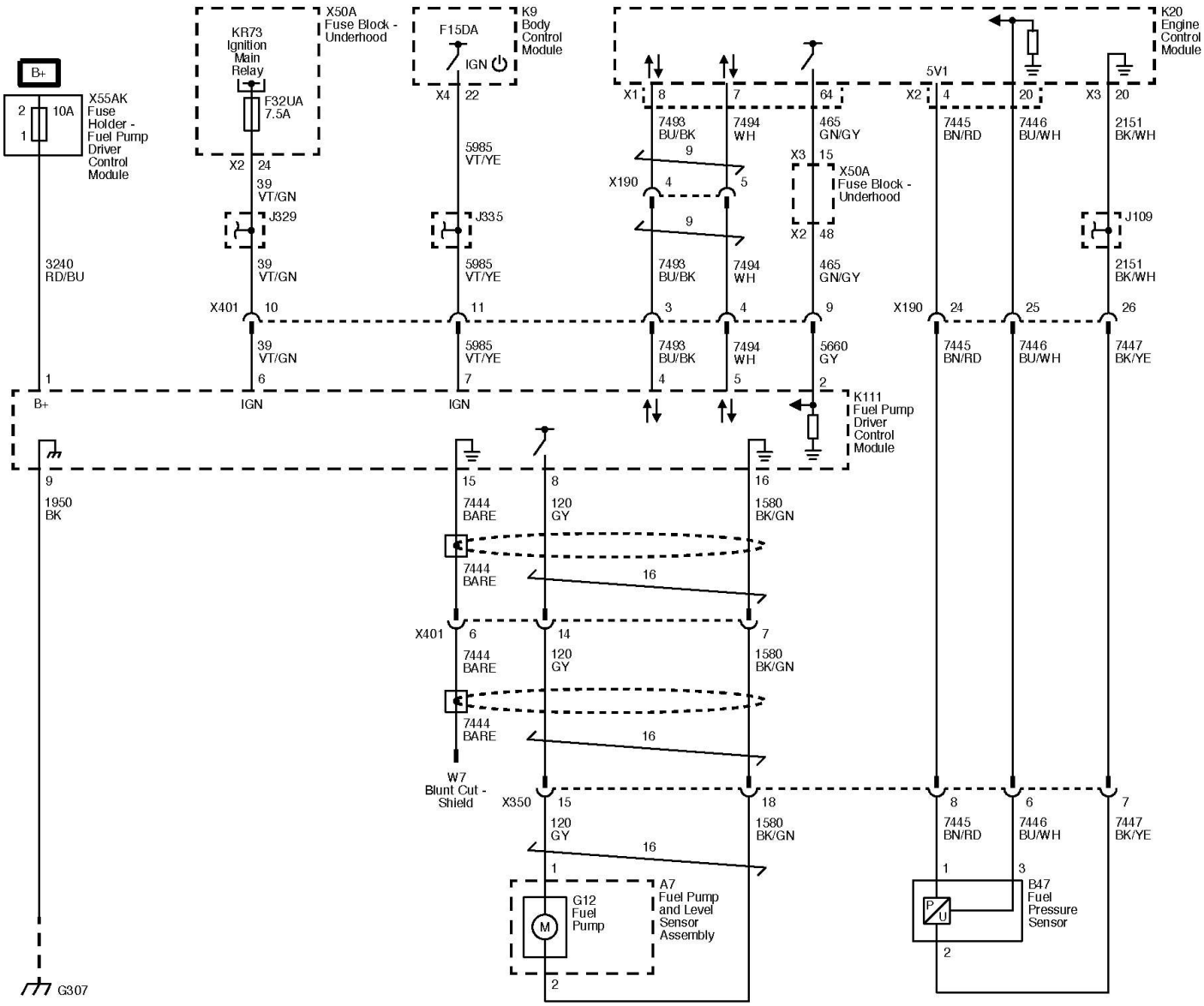
# Fuel Controls - Fuel Pump Controls