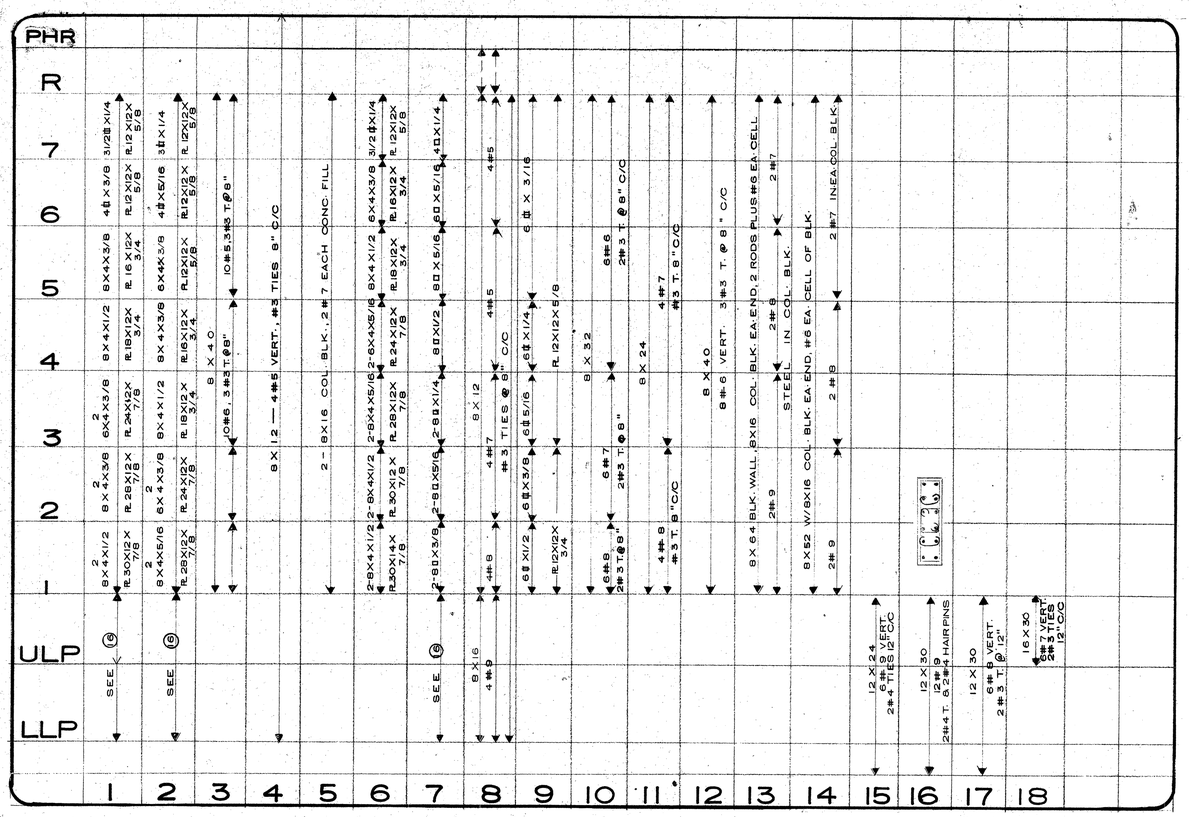

COLUMN SCHEDULE

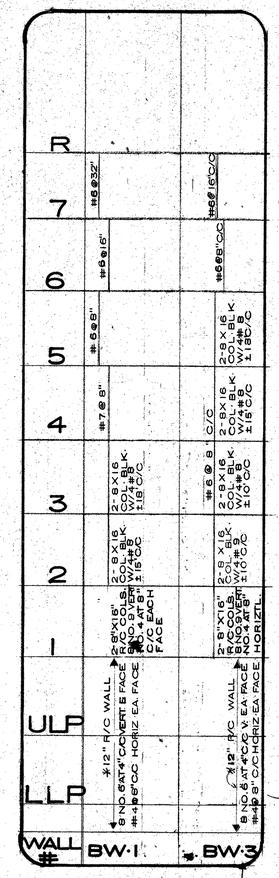

WALL SCHEDULE

ALL CELLS W/RODS TO BE CONC. FILLED 3000 P.S.I. REG. 2 CELL BLOCK

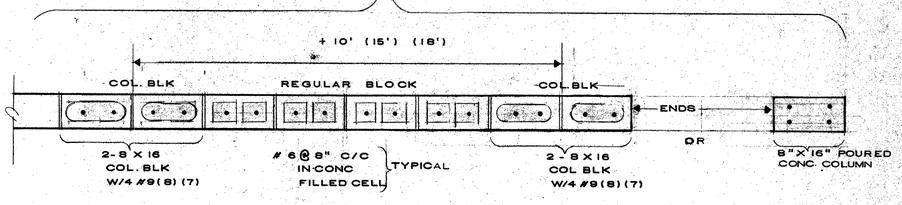

DETAIL

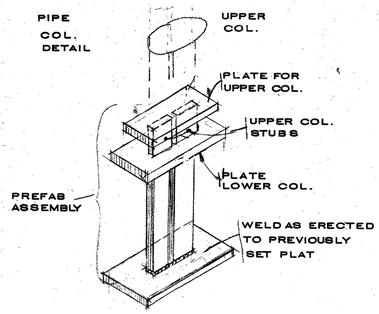

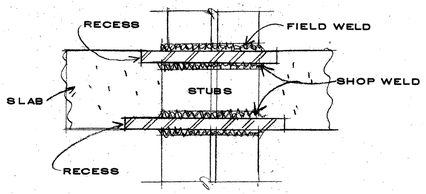

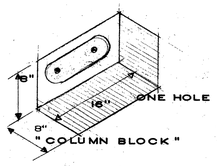

JUN 15 1988

R. WM. CLAYTON JR. ARCHITECT
1895 EAST OAKLAND PARK BLVD. FT. LAUDERDALE, FLA.
C.S. HOUHA CONSULTING ENGINEERS
3460 N.W. 9TH AVENUE OAKLAND PARK, FLA.

OVERLOOK CONDOMINIUM

COLUMN & WALL SCHEDULE

DRAWN BY: ALP.
JOB NO. 8101
DATE: 8-12-81
REVISIONS: 4-3-84
6-11-84
AS BUILT 2-8-88

SHEET: S 10