To print at home, use heavy weight paper, or card stock. Cut out the cards along the dotted lines. If you're unable to print on both sides, you can simply fold on the center line to make a 2-sided card.

If you use a professional printer, we suggest you print 2-sided cards with white text on red card stock with rounded corners.

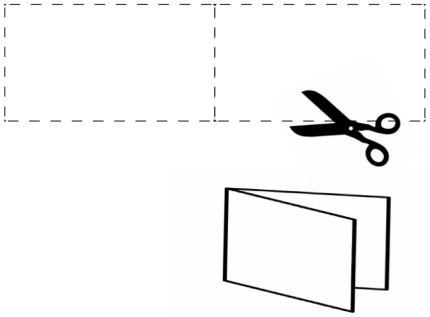

ሕገ መንግስቲ ብዝፈቐዶ መሰረት መሰልኩም ሕሉው እዩ።
ማዕጾ ከይትኸፍቱ: ዋላ ውን ናይ ኢሚግሬሽን ወኪል እንተ ኺሕትሑኩም።
ንዝኾነ ይኹን ሕቶ መልሲ ኣይትሃቡ: እንተ ድኣ ናይ ኢሚግሬሽን ወኪል ክሓተኩም ፈቲኑ።
ናይ ዘይምምላስ መሰልኩም ዝተሓለወ እዩ።
ንጠቢቕ ከየዘራረብኩም ዝኾነ ይኹን ነገር ከይትፈርሙ።
ምስ ጠበቕ ናይ ምዝራብ መሰል ኣለኩም። እንተድኣ ካብ ገዛኹም ወጻኢ ኣለኹም:
ነቲ ወኪል ክንከይድ ዶ ኢልኩም ፍቃድ ሕተቱዎ:
እንተድኣ ፈቒዱልኩም ድማ ብህድኣት ኪዱ።
እዚኣ ካርድ ነቲ ወኪል ሀቡዎ።
ኣብ ገዛ እንተተለኹም : ነታ ካርድ በቲ መስኮት ኣርእዩዎ:
ወይ ድማ ብትሕቲ ማዕጾ ኣቕበልዎ።
እታ ካርድ ኣብ ወብሳይትና aansf.org ክትረኽብዋ ትኽእሉ ኢኹም።

www.RedCardOrders.com

I do not wish to speak with you, answer your questions, or sign or hand you any documents based on my 5th Amendment rights under the United States Constitution.

I do not give you permission to enter my home based on my 4th Amendment rights under the United States Constitution unless you have a warrant to enter, signed by a judge or magistrate with my name on it that you slide under the door.

I do not give you permission to search any of my belongings based on my 4th Amendment rights.

I choose to exercise my constitutional rights.

These cards are available to citizens and noncitizens alike.

ሕገ መንግስቲ ብዝፈቐዶ መሰረት መሰልኩም ሕሉው እዩ።
ማዕጾ ከይትኸፍቱ: ዋላ ውን ናይ ኢሚግሬሽን ወኪል እንተ ኺሕትሑኩም።
ንዝኾነ ይኹን ሕቶ መልሲ ኣይትሃቡ: እንተ ድኣ ናይ ኢሚግሬሽን ወኪል ክሓተኩም ፈቲኑ።
ናይ ዘይምምላስ መሰልኩም ዝተሓለወ እዩ።
ንጠቢቕ ከየዘራረብኩም ዝኾነ ይኹን ነገር ከይትፈርሙ።
ምስ ጠበቕ ናይ ምዝራብ መሰል ኣለኩም። እንተድኣ ካብ ገዛኹም ወጻኢ ኣለኹም:
ነቲ ወኪል ክንከይድ ዶ ኢልኩም ፍቃድ ሕተቱዎ:
እንተድኣ ፈቒዱልኩም ድማ ብህድኣት ኪዱ።
እዚኣ ካርድ ነቲ ወኪል ሀቡዎ።
ኣብ ገዛ እንተተለኹም : ነታ ካርድ በቲ መስኮት ኣርእዩዎ:
ወይ ድማ ብትሕቲ ማዕጾ ኣቕበልዎ።
እታ ካርድ ኣብ ወብሳይትና aansf.org ክትረኽብዋ ትኽእሉ ኢኹም።

www.RedCardOrders.com

I do not wish to speak with you, answer your questions, or sign or hand you any documents based on my 5th Amendment rights under the United States Constitution.

I do not give you permission to enter my home based on my 4th Amendment rights under the United States Constitution unless you have a warrant to enter, signed by a judge or magistrate with my name on it that you slide under the door.

I do not give you permission to search any of my belongings based on my 4th Amendment rights.

I choose to exercise my constitutional rights.

These cards are available to citizens and noncitizens alike.

ሕገ መንግስቲ ብዝፈቐዶ መሰረት መሰልኩም ሕሉው እዩ።
ማዕጾ ከይትኸፍቱ: ዋላ ውን ናይ ኢሚግሬሽን ወኪል እንተ ኺሕትሑኩም።
ንዝኾነ ይኹን ሕቶ መልሲ ኣይትሃቡ: እንተ ድኣ ናይ ኢሚግሬሽን ወኪል ክሓተኩም ፈቲኑ።
ናይ ዘይምምላስ መሰልኩም ዝተሓለወ እዩ።
ንጠቢቕ ከየዘራረብኩም ዝኾነ ይኹን ነገር ከይትፈርሙ።
ምስ ጠበቕ ናይ ምዝራብ መሰል ኣለኩም። እንተድኣ ካብ ገዛኹም ወጻኢ ኣለኹም:
ነቲ ወኪል ክንከይድ ዶ ኢልኩም ፍቃድ ሕተቱዎ:
እንተድኣ ፈቒዱልኩም ድማ ብህድኣት ኪዱ።
እዚኣ ካርድ ነቲ ወኪል ሀቡዎ።
ኣብ ገዛ እንተተለኹም : ነታ ካርድ በቲ መስኮት ኣርእዩዎ:
ወይ ድማ ብትሕቲ ማዕጾ ኣቕበልዎ።
እታ ካርድ ኣብ ወብሳይትና aansf.org ክትረኽብዋ ትኽእሉ ኢኹም።

www.RedCardOrders.com

I do not wish to speak with you, answer your questions, or sign or hand you any documents based on my 5th Amendment rights under the United States Constitution.

I do not give you permission to enter my home based on my 4th Amendment rights under the United States Constitution unless you have a warrant to enter, signed by a judge or magistrate with my name on it that you slide under the door.

I do not give you permission to search any of my belongings based on my 4th Amendment rights.

I choose to exercise my constitutional rights.

These cards are available to citizens and noncitizens alike.

ሕገ መንግስቲ ብዝፈቐዶ መሰረት መሰልኩም ሕሉው እዩ።
ማዕጾ ከይትኸፍቱ: ዋላ ውን ናይ ኢሚግሬሽን ወኪል እንተ ኺሕትሑኩም።
ንዝኾነ ይኹን ሕቶ መልሲ ኣይትሃቡ: እንተ ድኣ ናይ ኢሚግሬሽን ወኪል ክሓተኩም ፈቲኑ።
ናይ ዘይምምላስ መሰልኩም ዝተሓለወ እዩ።
ንጠቢቕ ከየዘራረብኩም ዝኾነ ይኹን ነገር ከይትፈርሙ።
ምስ ጠበቕ ናይ ምዝራብ መሰል ኣለኩም። እንተድኣ ካብ ገዛኹም ወጻኢ ኣለኹም:
ነቲ ወኪል ክንከይድ ዶ ኢልኩም ፍቃድ ሕተቱዎ:
እንተድኣ ፈቒዱልኩም ድማ ብህድኣት ኪዱ።
እዚኣ ካርድ ነቲ ወኪል ሀቡዎ።
ኣብ ገዛ እንተተለኹም : ነታ ካርድ በቲ መስኮት ኣርእዩዎ:
ወይ ድማ ብትሕቲ ማዕጾ ኣቕበልዎ።
እታ ካርድ ኣብ ወብሳይትና aansf.org ክትረኽብዋ ትኽእሉ ኢኹም።

www.RedCardOrders.com

I do not wish to speak with you, answer your questions, or sign or hand you any documents based on my 5th Amendment rights under the United States Constitution.

I do not give you permission to enter my home based on my 4th Amendment rights under the United States Constitution unless you have a warrant to enter, signed by a judge or magistrate with my name on it that you slide under the door.

I do not give you permission to search any of my belongings based on my 4th Amendment rights.

I choose to exercise my constitutional rights.

These cards are available to citizens and noncitizens alike.