ATT-2 (Towbarless Tug)

BL PN: 1003.000-00

Product Specification -

Self-propelled automotive controlled, hydraulically operated vehicle designed to lift and tow aircrafts and helicopters weighing up to 40,000kg. The ATT-II is capable of maneuvering in small hangers and other extremely small areas. Complete drive-by-wire capability, with optional remote-control operation. Real-time landing gear load limitation, and towing slope monitoring.
An optional ATT-2E fully electric, zero-emission towbarless tug is available upon request.
Optional front-connected add-on of a hydraulic crane, for aircraft bay operations (canopy replacement, and various others).

GENERAL CHARACTERISTICS		
Lifting capacity	.....	7,000 kgf / 15,000 lbs.
Weight (unloaded)	.....	3,300 kgf / 7,200 lbs.
PERFORMANCE		
Maximal arms span	.....	780 mm / 30.5"
Minimal lifting height	.....	50 mm / 2"
Maximal lifting height	.....	300 mm / 12"
Maximal swing angle	.....	17.5°
HYDRAULIC CHARACTERISTICS		
Lift system pressure	.....	160 bar / 2,350 PSI
ELECTRIC CHARECTARISTICS		
12 Volt system		

MOBILITY		
Max. travel speed, unloaded	.....	10 kph / 6 mph
Max. speed, loaded	.....	6 kph / 4 mph
Max. slope, unloaded	.....	7%
Turning radius (complete swing clear)	.....	3,400 mm / 133"
Turning radius (Nose landing gear)	.....	0 mm / 0"
Track width	.....	2,180 mm / 86"
Wheelbase	.....	2,750 mm / 108"
Drawbar pull	.....	6,500 kgf / 14,300 lbs.
Steering	.....	Hydrostatic 2 wheel steering
Brakes	.....	Hydraulic release parking
Tires - Front (solid)	.....	425x260 traction polyurethane
ENGINE SPECIFICATIONS		
Model no.	.....	Isuzu 4LE2PW10 (4 Cyl. Diesel)
Fuel type	.....	Multi-fuel (diesel/jet)
Rated output @ 2,500 RPM	.....	48 BHP
Displacement	.....	2.2 Liters

US Advanced Systems LLC.
1900 Case Pkwy S, Twinsburg, OH 44087, United States

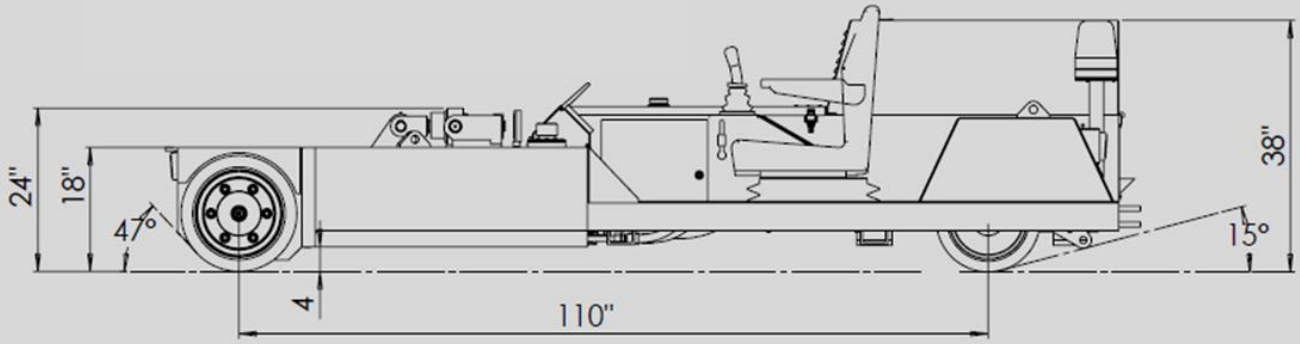

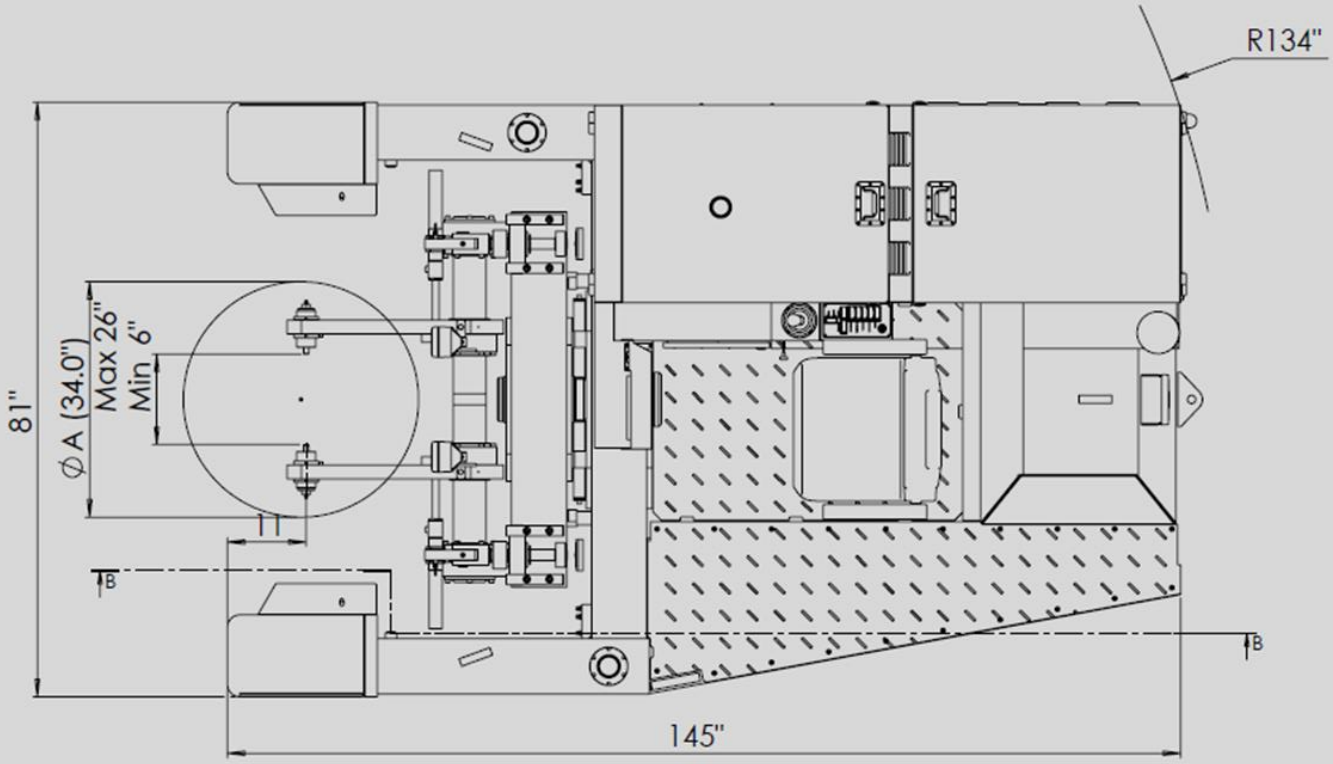

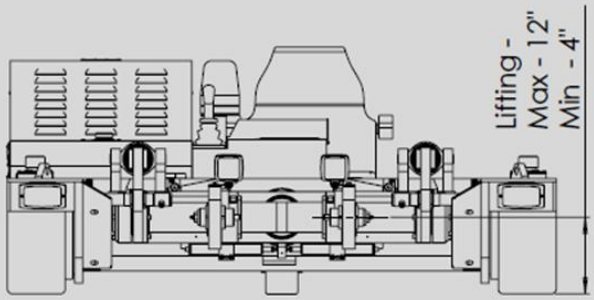

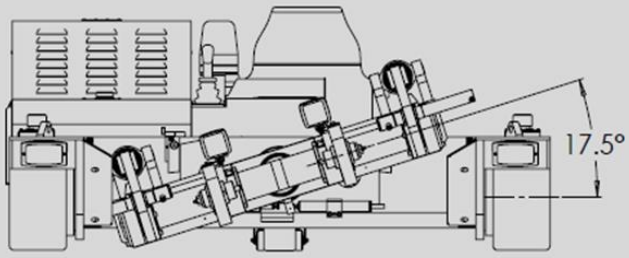

US Advanced Systems LLC.
1900 Case Pkwy S, Twinsburg, OH 44087, United States