# DELTA 8 556

## Smoke Signal Device

**Consumer made. Commercial Grade.**
**A Do-It-Yourself Kit**

Rev 1.2

**Mixture Filling**
**&**
**Assembly Instructions**

**Video Instructions**
**On YouTube**

**A product exclusively by**
**NFE Tactical LLC**

**www.nfetactical.com**

**67mm Smoke Signal for**
**X Products Can Cannon**

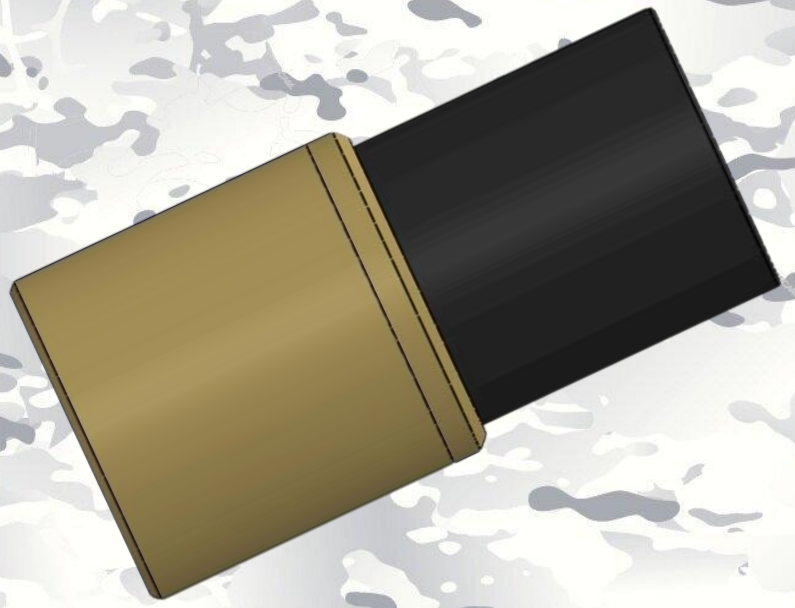

NFE_TACTICAL

nfe_tactical

NOT FOR EVERYONE
NFE
CONTENT RATED BY ESRB

Touch of Tism

# Items you will need (Not included in the kit)



Coffee Grinder



Pocket scale



Metal Spoon or
Non-stick spatula

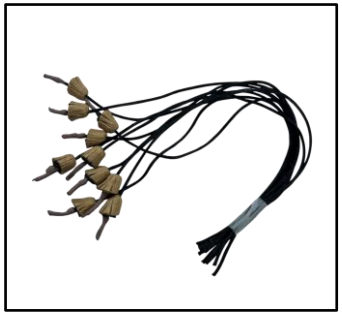

Pull String Igniters



Single burner
Cooktop



Small 5-6” pot.
Non-stick
preferred



Potassium
Nitrate
(Technical Grade)




Sugar



Paraffin Wax
Pellets

# SAFETY FIRST

It is highly recommended to use a respirator when handling potassium nitrate. Over exposure may lead to respiratory issues.



# Items Included in the kit

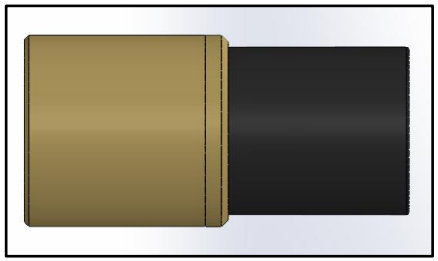

4X Delta 8 556 Fully Assembled

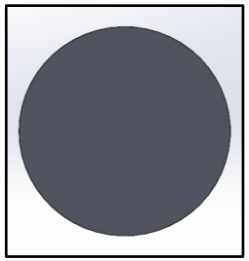

Vinyl Sticker 4X



Silicone Plug 1X



Clear Mixing cup 4X




Alcohol Swabs 8X



Funnel

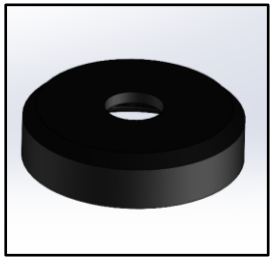

Can Cap

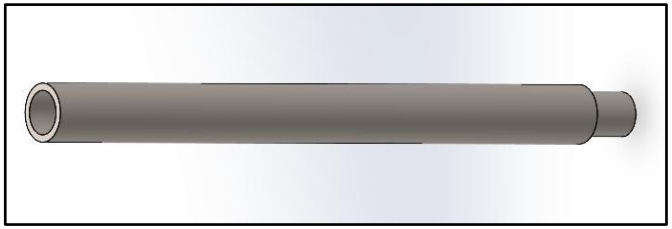

Steel Core Rod 1X

**This mixture to be used by Certified Pyrotechnicians only**

Other smoke mixtures can be substituted.

# PART 1 THE MIXTURE

### Items you will need in this section



Pocket scale



Spoon



Paraffin Wax Pellets



Potassium Nitrate (Fireworks Grade)




Sugar



Clear Mixing cup

1. Place a cup on the scale and hit tare. This will zero out the scale, so the measurement is accurate.

2. Using the spoon, place **60 grams of potassium nitrate** into the cup. Do a little at a time to reach 60 grams. Set this cup aside.

3. With a new cup on the scale, using the spoon, place **30-45 grams of sugar** into the cup. Do a little at a time to reach the desired amount. Set this cup aside

   **More sugar produces a faster/hotter burn. 40g is a good starting point.**

4. Place a new cup on the scale. If you purchased solid candles, use a scissor or box cutter and chip away chunks of wax. Put **40-50 grams of wax** into the cup and set aside.

**Start with 40 grams of wax. The composition when mixed with the other ingredients should resemble a slushy. You can add more wax while mixing.**

**Try to stay within +/- .5 - .8 grams. Any extreme deviation from the above amounts will result in an undesired result.**

**Repeat this process 2X to fill the can**

# PART 2 THE MIXING

Items you will need in this section



Coffee Grinder



Single burner Cooktop



Small 5-6” pot

**5** Take your potassium nitrate and sugar and combine them in the coffee grinder. Mix for 1-2 minutes while tapping the sides, shaking it, turning it upside down, ensuring the mixture is even. These grinders are good, but a lot of the powder falls below the blade. When this is complete place the mixture into an empty cup and set aside.

**6** Plug in your cook top with the pot on the burner and set to the dial to 1-2 . Dump your paraffin wax into the pot and melt. Occasionally stir so all the chunks melt faster. **If you hear the wax popping and crackling, your heat is too high.**

**7** When the wax is completely melted, dump your potassium nitrate and sugar mix into the wax. Using the metal spoon stir the mixture until the combined powder is fully coated. This mixture, **DO NOT** caramelize like other recipes so you may have to turn off your heat to prevent this. Stir until smooth. If needed add more wax in 5-10g increments to get desired consistency.

**8** Once the combined mixture of potassium nitrate and sugar is coated with melted wax, the mixture should form a slurry or a smooth wet paste. Lower the temp of your burner and let sit while you prepare for pouring.

## Do this process 2X

# PART 3 THE POUR

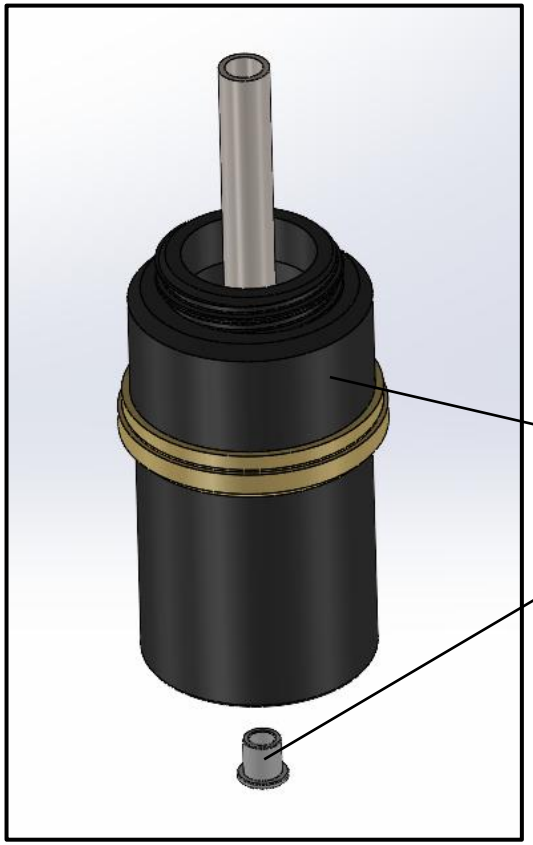


**9** Install the Silicone Plug in the bottom end of the can. Make sure the plug is seated all the way in to ensure a good seal.

**10** Place the core rod into the silicone plug with the small end of the core rod facing down

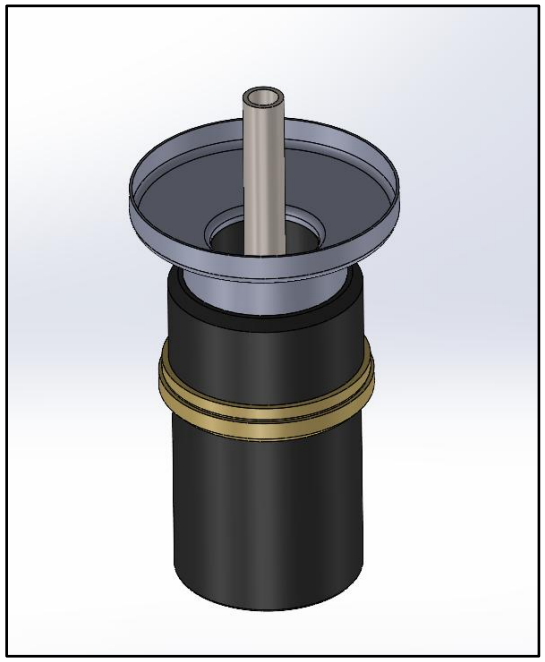

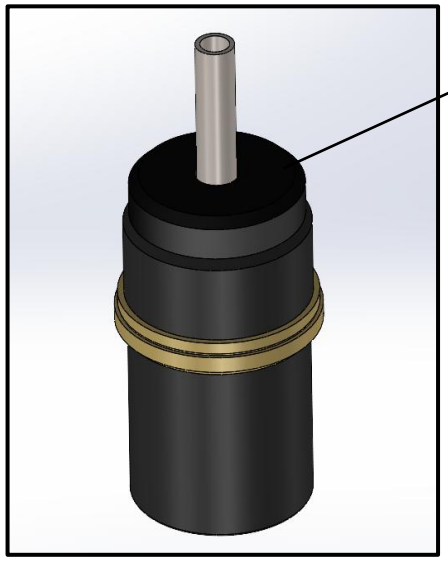


**11** Place the funnel on top of the opening of the can. Pour the smoke mixture into the funnel and push down, if necessary, with a spoon.

Remove the funnel.

**12** Keeping the can held down flat, jog the fixture back and forth to get the hot mixture to level out.

**13** Make new mixture of potassium nitrate, sugar and wax. Repeat steps 1-8. **If the core rod slips out of the silicone plug, place the core rod on top of the plug and let it cool. You may have to drill the bottom using a 3/8 drill bit.**

**14** Install the Can Cap on top of the can inlet with the steel core rod still inside. The Can Cap will help keep the Steel Core Rod centered.

**15** Place in freezer for 15 - 20min. Air cooling can be done but cooling times may vary.

**16** When the mixture has completely cooled, remove the steel core rod, the silicone plug and can cap. If the steel core rod is stuck, use a heat gun and let the heat transfer from the top of the steel core rod down to the bottom. Do not aim the heat towards the mixture inside the can. Vise Grip plyers can be used but it will damage the metal.

**17** Repeat the whole process for the other cans provided in the kit.

# PART 4 THE IGNITION

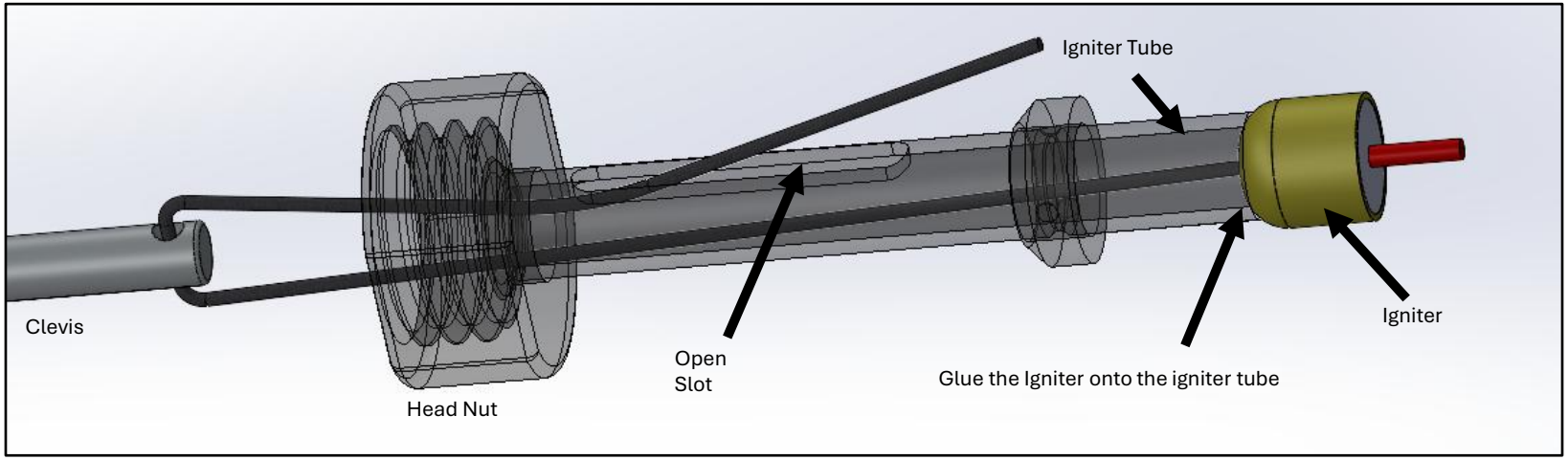


Feed the string of the igniter through the center of the igniter tube. Next, feed the string through the hole on the end of the clevis pin. Feed the string of the igniter back into the igniter tube and feed out through the slotted hole. Line up the slotted hole of the igniter tube with the hole of the clevis. Lightly pull the slack of the igniter string as you tighten down the head nut.

1



Tie a knot at the very end of the string

2

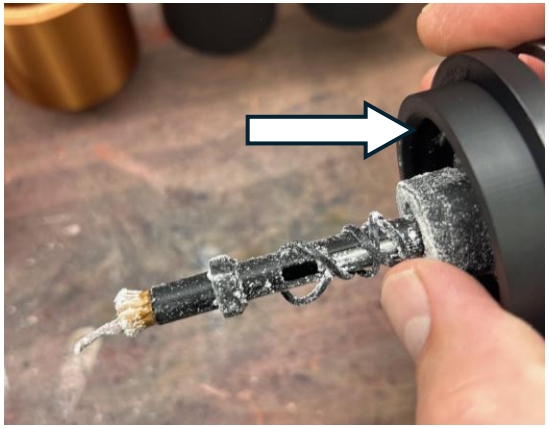

Loosely wrap the string around the igniter tube. This is only to prevent the string for getting caught in the threads (Arrow)

3

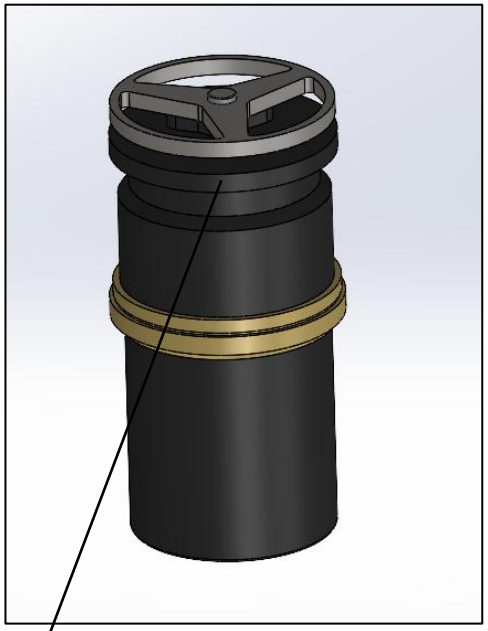

Screw the tail section onto the can

4

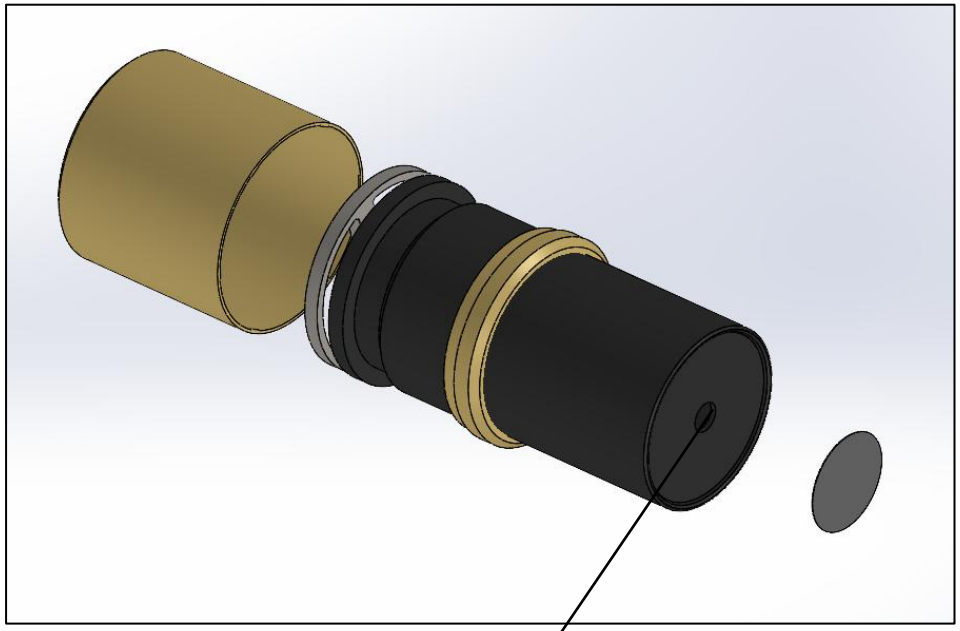

Make a mixture of 75%/25% Potassium Nitrate/Sugar (Example: 30g Potassium Nitrate / 10g Sugar) and fill the hole in the can to the top. Pack it in using your finger.

Wiper away any excess compound with a brush. Use the alcohol wipes to clean up the area around the hole. Allow for adequate time for the alcohol to dry Apply the sticker.

Snap on the tail section cover. If its loose you may secure the seam with one layer of scotch tape. The force when launching is strong enough to separate the halves.

**Congratulations!**
**You did it.**
**You created your smoke signal device.**



- Always hold the smoke device with the bottom facing directly down.
- Never point it at anyone and do not have it on an angle towards yourself.
- Hold the smoke device with your arm extended with your dominant hand.
- Pull the keyring with your opposite hand.
- The ignition is instantaneous.
- Immediately throw the smoke device to a safe distance.
- **If using the Delta 8, firearm safety applies.**
- The reaction of the mixture is hot. **Do not throw it or launch it in any area that can catch fire, or you don't want burned.**
- **Wait 20 minutes before picking up spent smoke device**