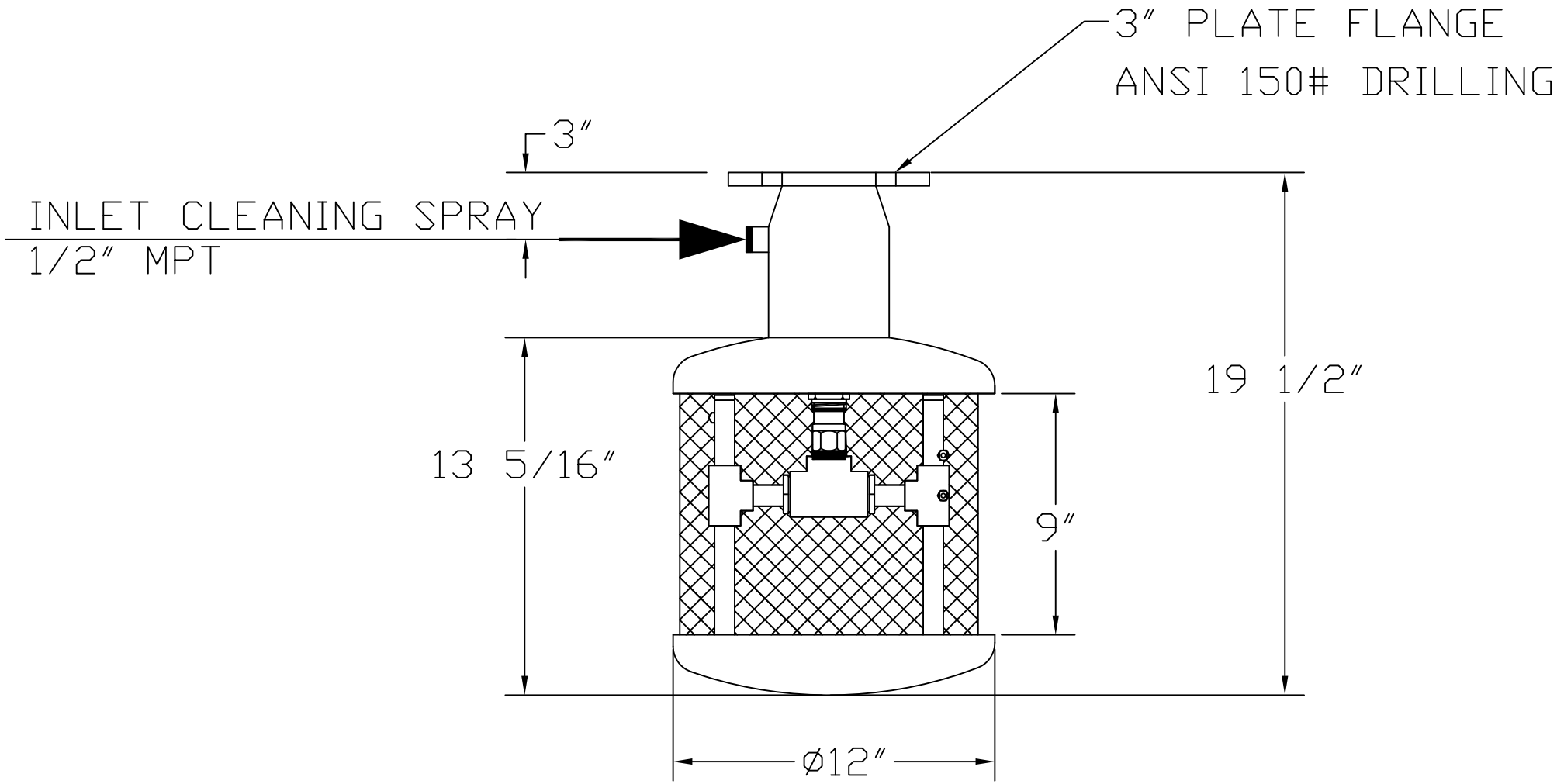

MODEL	RATED FLOW
	12 MESH
CW100	200 GPM

CLEANING SPRAY FLOW
12 GPM @ 40 PSI MIN, 60 PSI MAX

THIS DRAWING, INCLUDING THE INFORMATION IT CONTAINS, IS CON-FIDENTIAL, PROPRIETARY, AND IS THE PROPERTY OF YARDNEY WATER MANAGEMENT, INC. IT IS SUBMITTED ONLY IN CONNECTION WITH THE TRANSACTION TO WHICH IT PERTAINS AND MUST NOT BE USED IN ANY OTHER MANNER DETRIMENTAL TO THE INTERESTS OF YARDNEY WATER MANAGEMENT. THE DRAWING IS NOT TO BE COPIED AND MUST BE RETURNED UPON REQUEST COPYRIGHT YARDNEY WATER MANAGEMENT SYSTEMS, 1993.

SYM	REVISIONS	BY	DATE	APP

DO NOT SCALE DWG.

yardney
WATER FILTRATION SYSTEMS
RIVERSIDE, CALIFORNIA

APPROVALS	DATE
DRAWN BY: DTO	5/9/16
CHECKED BY:	
APPROVED BY:	
ARCHITECTURAL SCALE: NONE	
USED ON:	

CLEARWATER SELF-CLEANING SUCTION SCREEN

SIZE	DRAWING NO:	REV:
D	CW100	-

SCALE: NONE DWG DIR: SYSTEMS\SUCTION SCREEN SHEET 1 OF 1