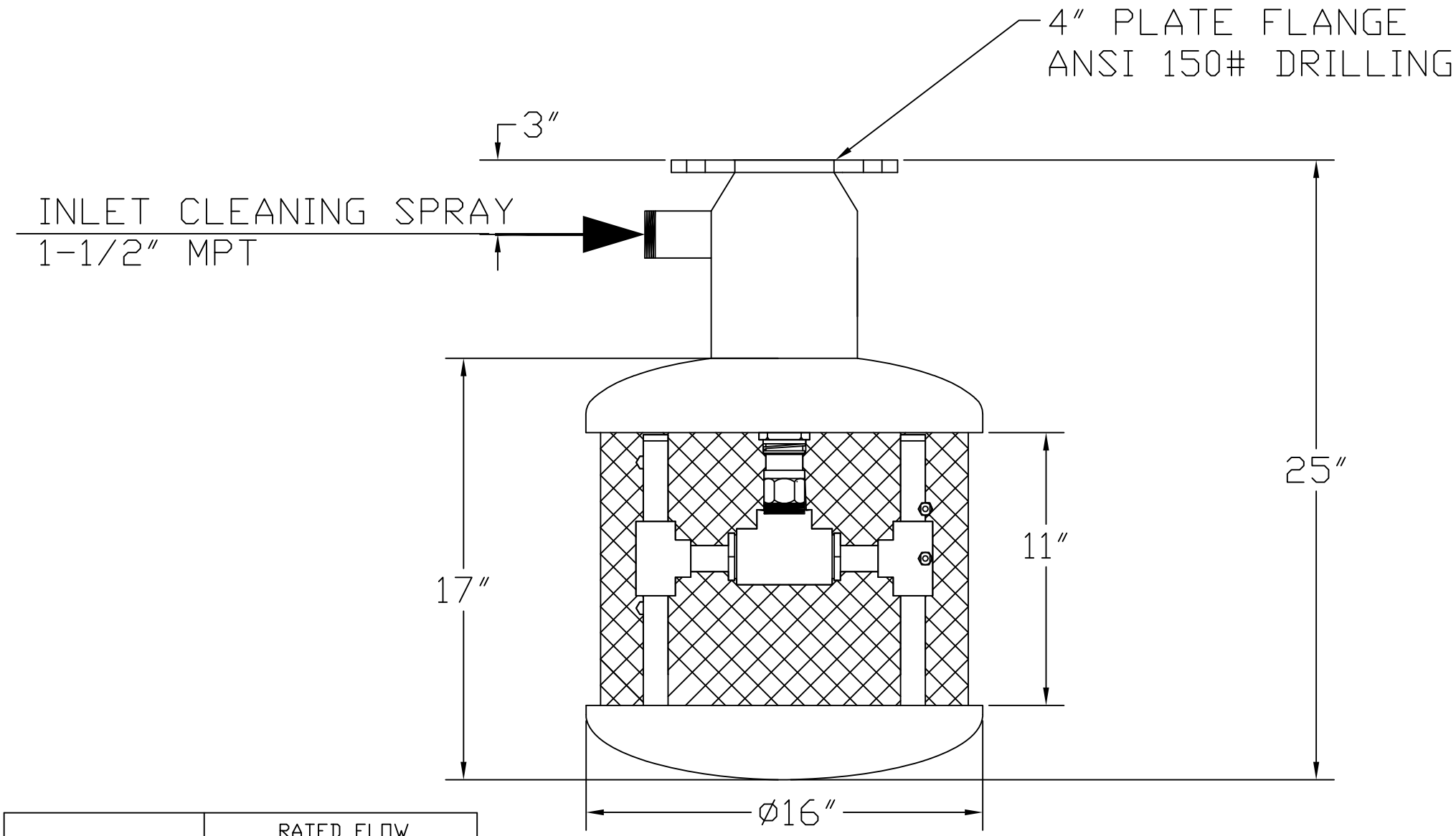

MODEL	RATED FLOW	
	12 MESH	30 MESH
CW200	325 GPM	200 GPM

CLEANING SPRAY FLOW
20 GPM @ 40 PSI MIN, 60 PSI MAX

THIS DRAWING, INCLUDING THE INFORMATION IT CONTAINS, IS CONFIDENTIAL, PROPRIETARY AND IS THE PROPERTY OF YARDNEY WATER MANAGEMENT, INC. IT IS SUBMITTED ONLY IN CONNECTION WITH THE TRANSACTION TO WHICH IT PERTAINS AND MUST NOT BE USED IN ANY OTHER MANNER DETRIMENTAL TO THE INTERESTS OF YARDNEY WATER MANAGEMENT.

Yardney WATER MANAGEMENT SYSTEMS RIVERSIDE, CALIFORNIA

SYM	REVISIONS	BY	DATE	APP
E	30 MESH DERATED; ADDED SCREEN LENGTH	DTC	10-12	APP
D	2" VENT PORT REMOVED	DTC	8-12	APP
C	WAS 35 PSI MIN, 100 PSI MAX	DTC	10-10	APP
B	DIMINSION 17" UPDATED TO 16"	DTC	8-04	APP
A	REDRAWN TO SCALE	DTC	8-04	APP

APPROVALS		DATE
DRAWN BY:	K.A.T.	2/2/93
CHECKED BY:		
APPROVED BY:		
ARCHITECTURAL SCALE:		
USED ON:		

CLEARWATER SELF-CLEANING SUCTION SCREEN

SIZE: D | DRAWING NO: CW200 | REV: E

SCALE: | DWG DIR: SYSTEMS\SUCTION SCREEN | SHEET 1 OF 1