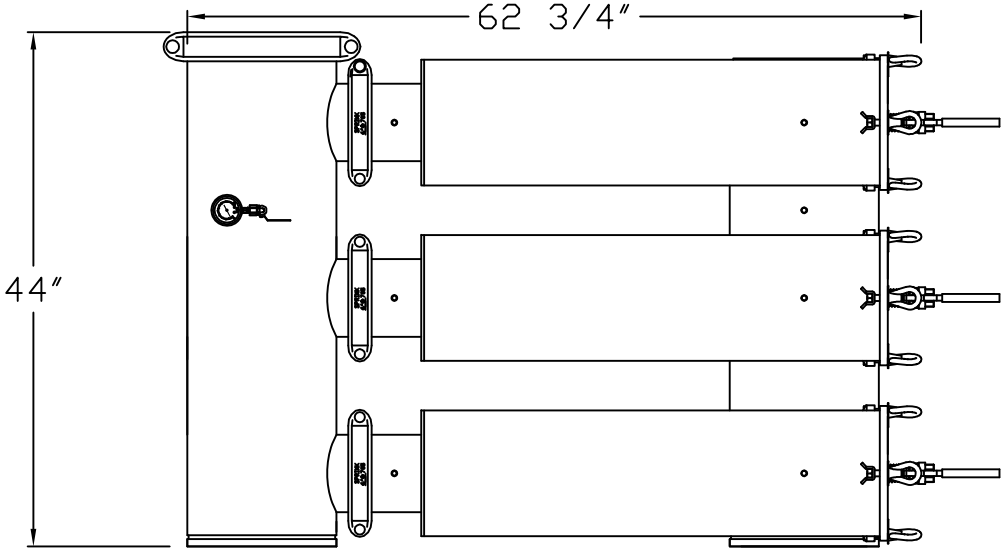

MAXI-CLEAN MCS 6-3

NOTES:

1. DESIGN FLOW RATE: 2700 GPM (MAX.).
2. OPERATING PRESSURE: 100 PSI (MAX.)

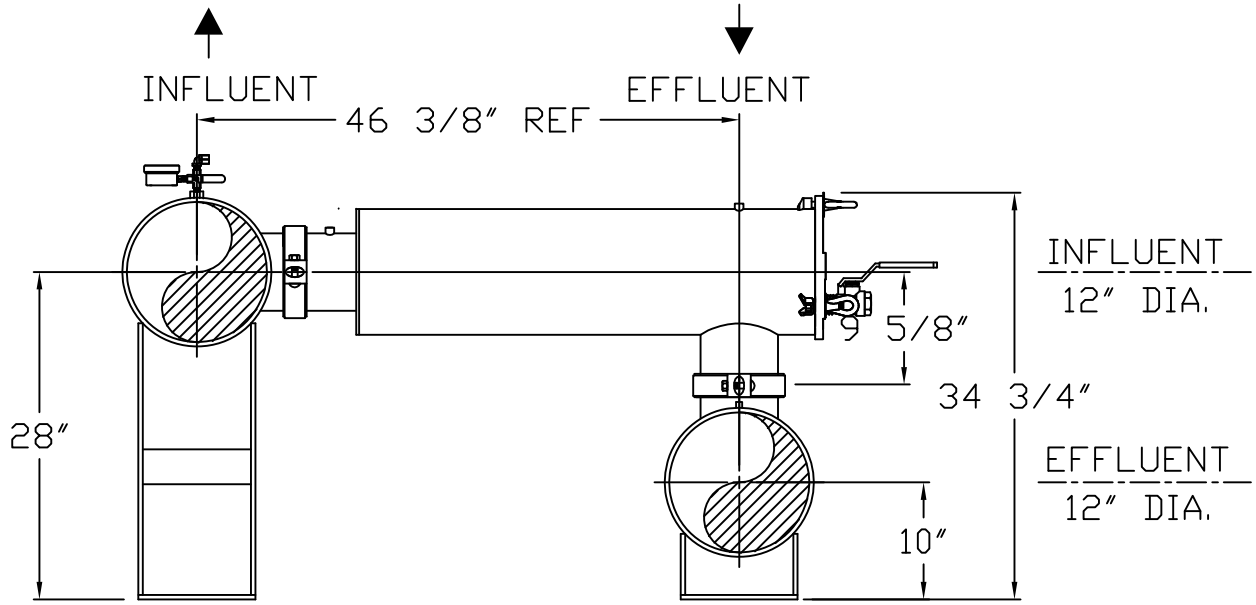

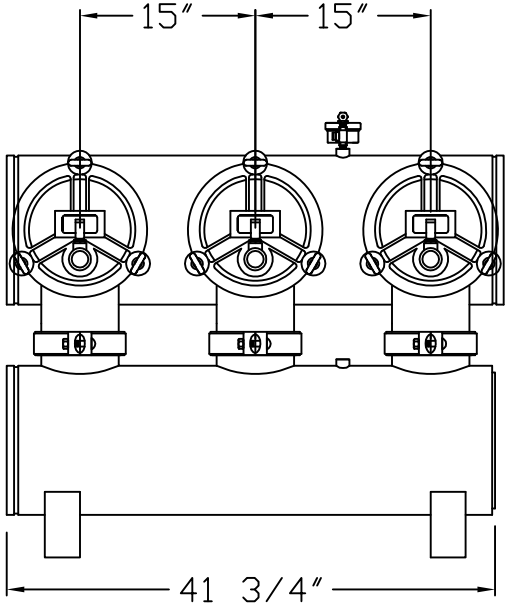

THIS DRAWING, INCLUDING THE INFORMATION IT CONTAINS, IS CONFIDENTIAL, PROPRIETARY AND IS THE PROPERTY OF YARDNEY WATER MANAGEMENT, INC. IT IS SUBMITTED ONLY IN CONNECTION WITH THE TRANSACTION TO WHICH IT PERTAINS AND MUST NOT BE USED IN ANY OTHER MANNER DETRIMENTAL TO THE INTERESTS OF YARDNEY WATER MANAGEMENT. THE DRAWING IS NOT TO BE COPIED AND MUST BE RETURNED UPON REQUEST.

DO NOT SCALE DWG.

Yardney
WATER MANAGEMENT SYSTEMS
RIVERSIDE, CALIFORNIA

SYM	REVISIONS	BY	DATE	APP
D	REPLACED TUBING 3/4" w/1/2" WELD TABS	DTO	11-12	APP
C	SHOWN w/CLAMP	DTO	1-09	APP
B	INFLUENT ONLY PIPE END CHG TO VICTAULIC	DTO	1-09	APP
A	CHANGED PORT LOCATION,QTY.	DTO	1-08	APP

APPROVALS		DATE
DRAWN BY	DTC	4-15-04
CHECKED BY		
APPROVED BY		
ARCHITECTURAL (SCALE)		
USED ON		

MAXI-CLEAN MCS 6-3

SIZE	DRAWING NO	REV
D	9075006031	D

SCALE | DWG DIR: SYSTEM\MCS\ | SHEET 1 OF 1