SPINFLOW 10-3

NOTES:

1. DESIGN FLOW RATE: 3500 GPM (MAX.).
2. OPERATING PRESSURE: 120 PSI (MAX.)

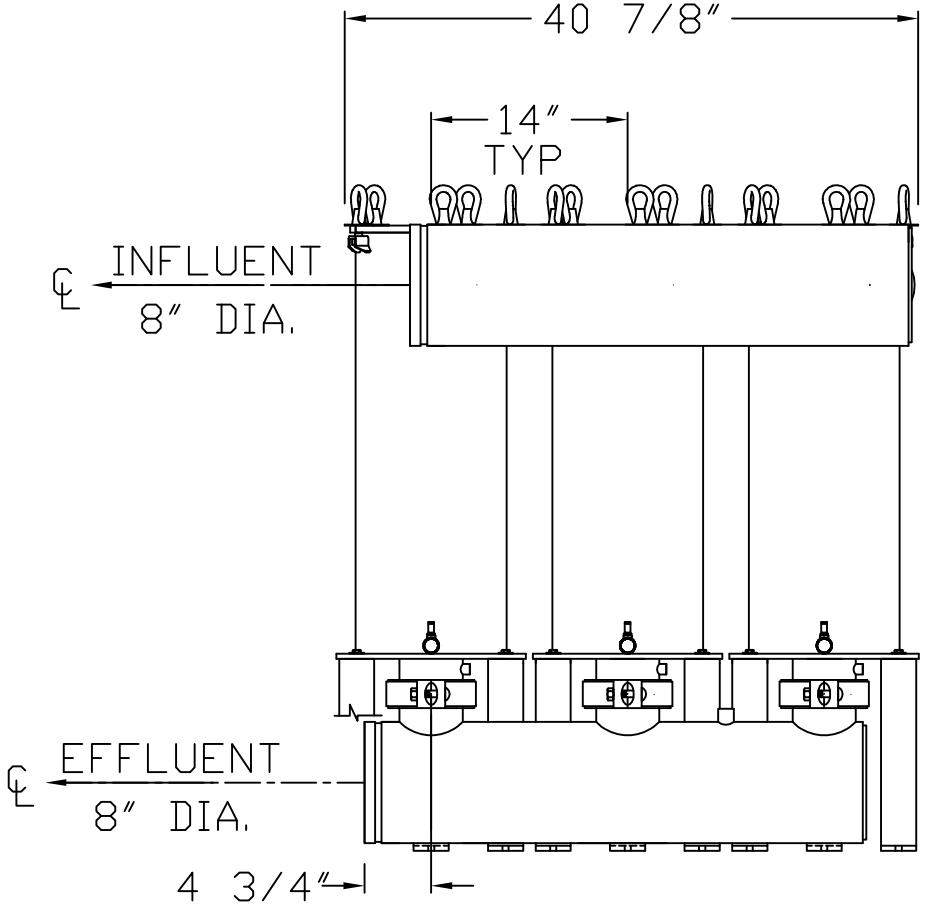

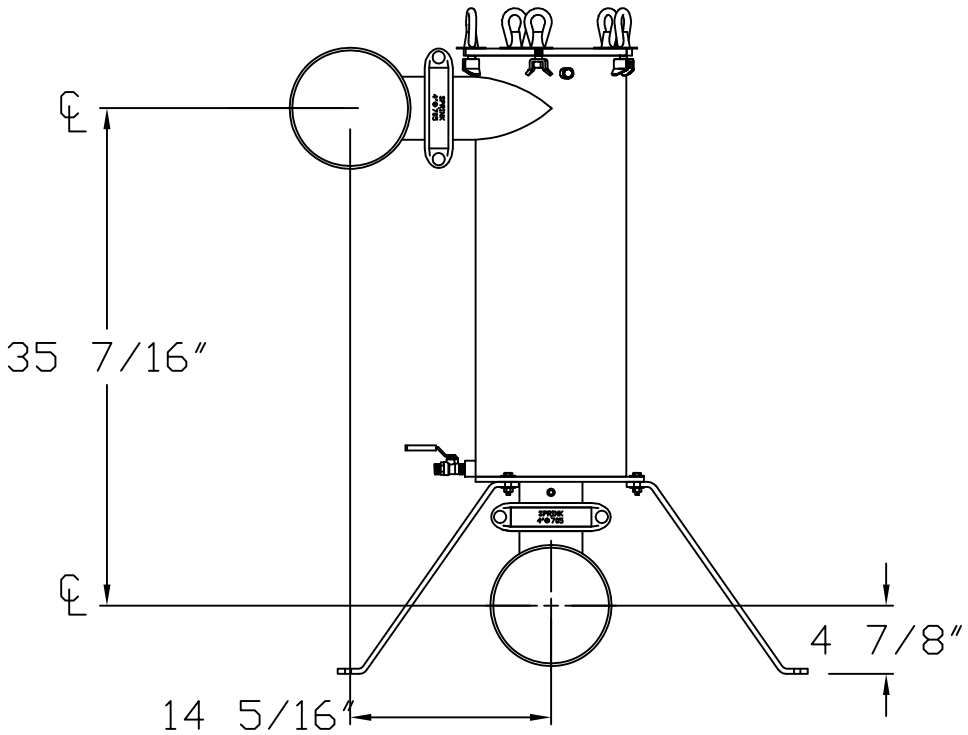

THIS DRAWING, INCLUDING THE INFORMATION IT CONTAINS, IS CONFIDENTIAL, PROPRIETARY AND IS THE PROPERTY OF YARDNEY WATER MANAGEMENT, INC. IT IS SUBMITTED ONLY IN CONNECTION WITH THE TRANSACTION TO WHICH IT PERTAINS AND MUST NOT BE USED IN ANY OTHER MANNER DETRIMENTAL TO THE INTERESTS OF YARDNEY WATER MANAGEMENT. THE DRAWING IS NOT TO BE COPIED AND MUST BE RETURNED UPON REQUEST.

SYM	REVISIONS	BY	DATE	APP

DO NOT SCALE DWG.

Yardney WATER MANAGEMENT SYSTEMS RIVERSIDE, CALIFORNIA

APPROVALS	DATE
DRAWN BY: DTO	11-9-12
CHECKED BY:	
APPROVED BY:	
ARCHITECTURAL SCALE: USED ON:	

SPINFLOW SF 10-3

SIZE	DRAWING NO:	REV:
D	9050001003	–

SCALE: DWG DIR: SYSTEM\SPINFLOW SHEET 1 OF 1