HOUSTON PNEUMATIC TOOL

Model **HP-1000** Parts Breakdown

(713) 569-8371 // patrick@houstonpneumatictool.com

HP-1000 · 1" Impact Wrench

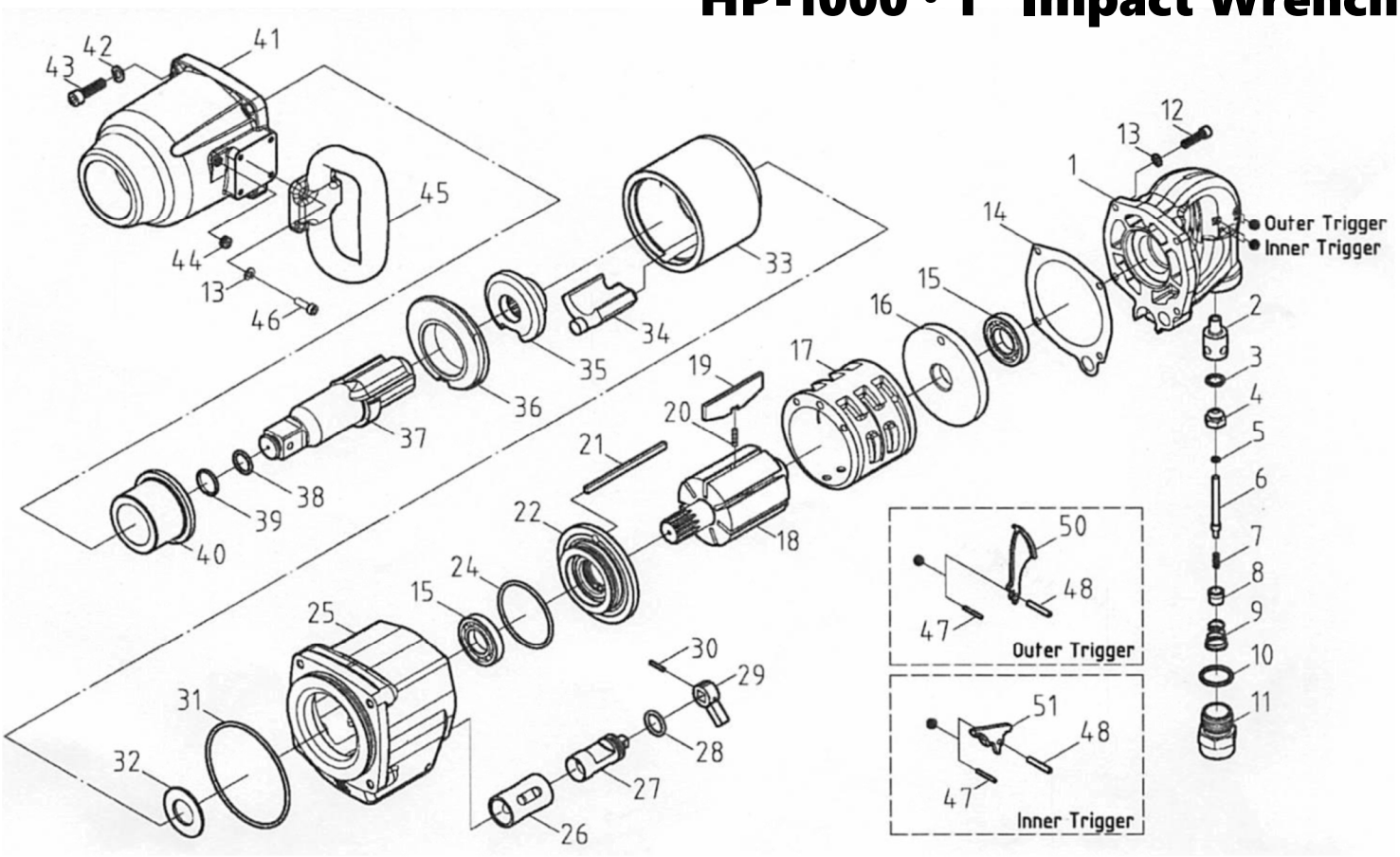

PARTS LIST

No.	Part No.	Part Name	Qty
1	HP-1000-01	Handle Body	1
2	HP-1000-02	Reverse Valve	1
3	HP-1000-03	O-Ring	1
4	HP-1000-04	Reverse Valve	1
5	HP-1000-05	O-Ring	1
6	HP-1000-06	Pin Valve Rod	1
7	HP-1000-07	Spring	1
8	HP-1000-08	Reverse Valve	1
9	HP-1000-09	Cone Spring	1
10	HP-1000-010	O-Ring	1
11	HP-1000-011	Air Inlet	1
12	HP-1000-012	Screw	4
13	HP-1000-013	Spring Washer	8
14	HP-1000-014	Packing	1
15	HP-1000-015	Ball Bearing	2
16	HP-1000-016	Rear Plate	1
17	HP-1000-017	Cylinder	1
18	HP-1000-018	Rotor	1
19	HP-1000-019	Blade	7

No.	Part No.	Part Name	Qty
20	HP-1000-020	Spring	7
21	HP-1000-021	Key	1
22	HP-1000-022	Front Plate	1
24	HP-1000-024	O-Ring	1
25	HP-1000-025	Housing	1
26	HP-1000-26	Valve Bushing	1
27	HP-1000-27	Reverse Valve	1
28	HP-1000-28	O-Ring	1
29	HP-1000-29	Reverse Lever	1
30	HP-1000-30	Spring Pin	1
31	HP-1000-31	O-Ring	1
32	HP-1000-32	Anvil Rear Spacer	1
33	HP-1000-33	Hammer Cage	1
34	HP-1000-34	Hammer	1
35	HP-1000-35	Hammer Cam	1
36	HP-1000-36	Anvil Front Spacer	1
37	HP-1000-37	Anvil	1
38	HP-1000-38	O-Ring	1
39	HP-1000-39	Anvil Collar	1

No.	Part No.	Part Name	Qty
40	HP-1000-40	Bushing	1
41	HP-1000-41	Front Casing	1
42	HP-1000-42	Spring Washer	4
43	HP-1000-43	Screw	4
44	HP-1000-44	Pipe Plug	1
45	HP-1000-45	Handle	1
46	HP-1000-46	Screw	4

Outer Trigger			
47	HP-1000-47	Spring Pin	1
48	HP-1000-48	Spring Pin	1
50	HP-1000-50	Trigger	1

Inner Trigger			
47	HP-1000-47	Spring Pin	1
48	HP-1000-48	Spring Pin	1
51	HP-1000-51	Trigger	1