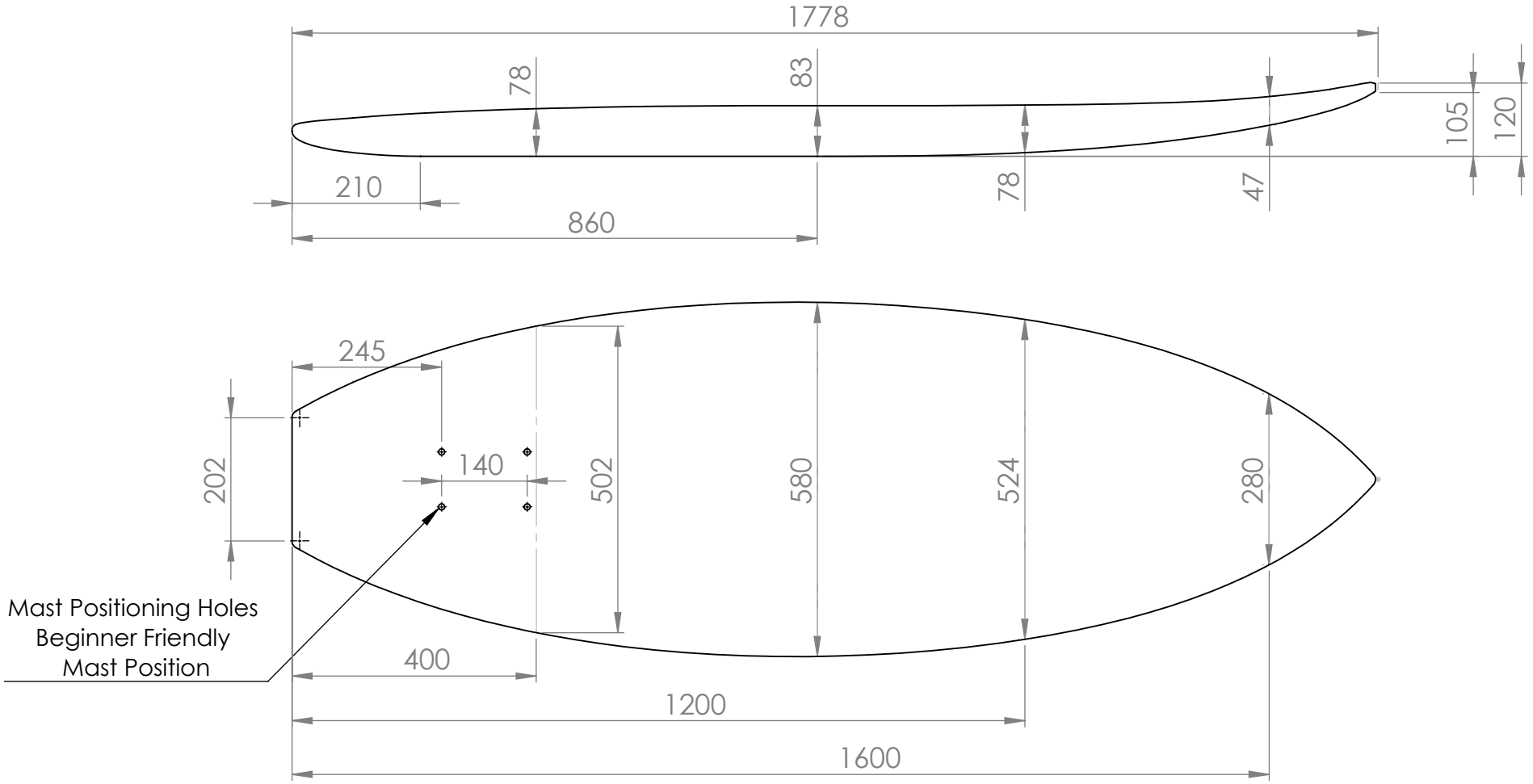

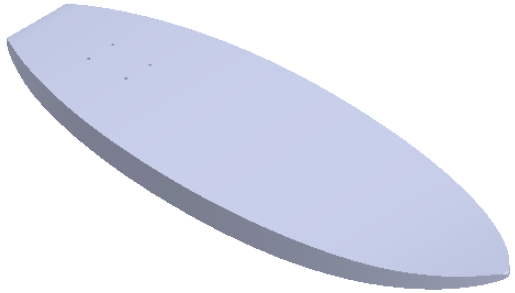

UNLESS OTHERWISE SPECIFIED: DIMENSIONS ARE IN MILLIMETERS SURFACE FINISH: TOLERANCES: LINEAR: ANGULAR:	FINISH:				DEBURR AND BREAK SHARP EDGES	DO NOT SCALE DRAWING / REVISION
	NAME	SIGNATURE	DATE			TITLE:
DRAWN	PRH		2020			5'10" x 23" x 3 1/4"
CHK'D						
APPV'D						
MFG						
Q.A				MATERIAL:		DWG NO. IFSurfFoilBoard — A4
				WEIGHT:		SCALE:1:10 — SHEET 1 OF 1