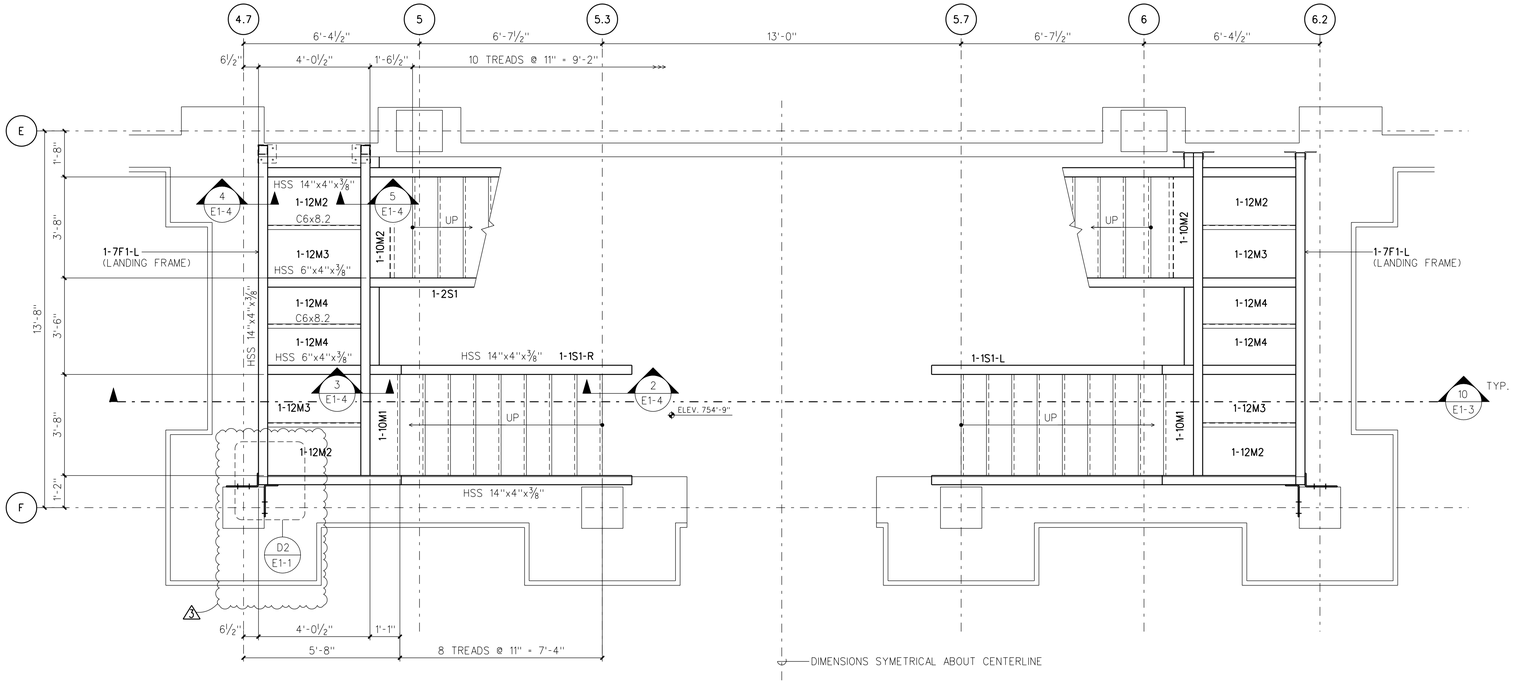

PLAN AT STAIR "A" - LEVEL 1

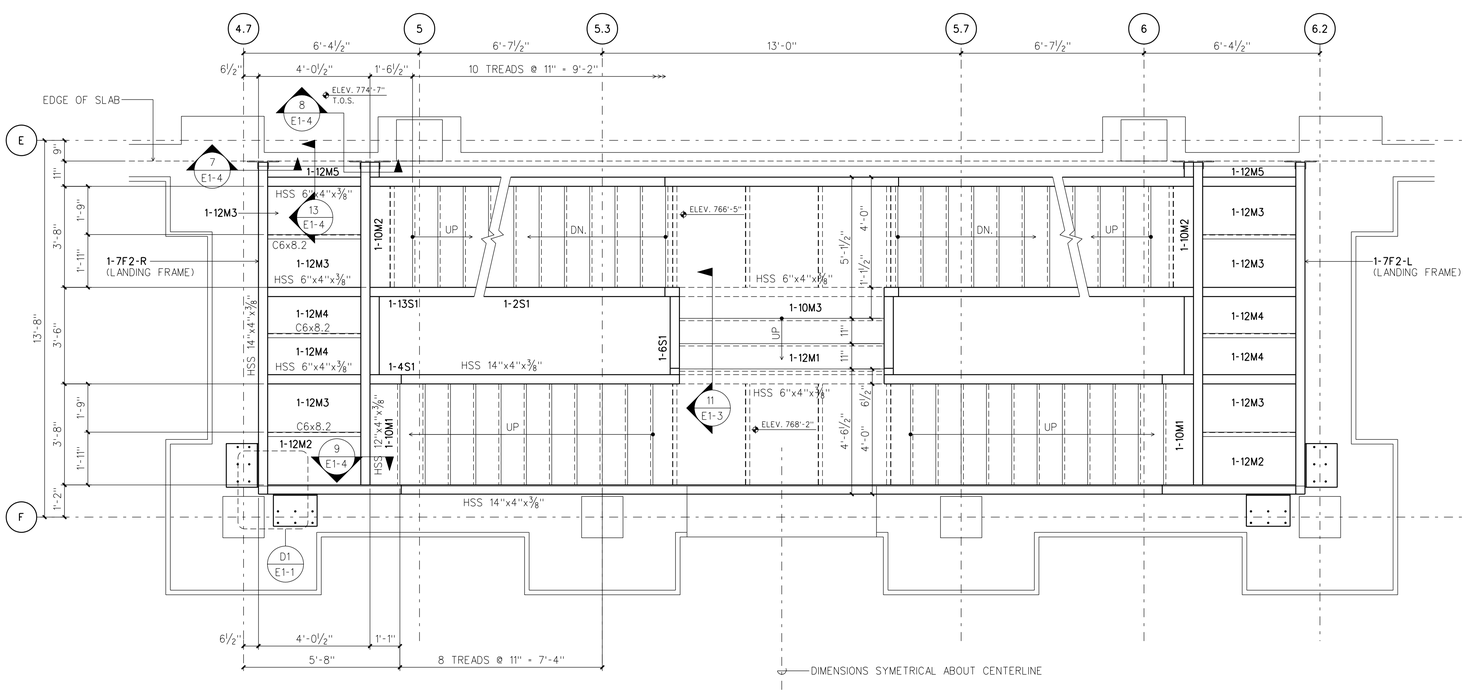

PLAN AT STAIR "A" - LEVEL 2

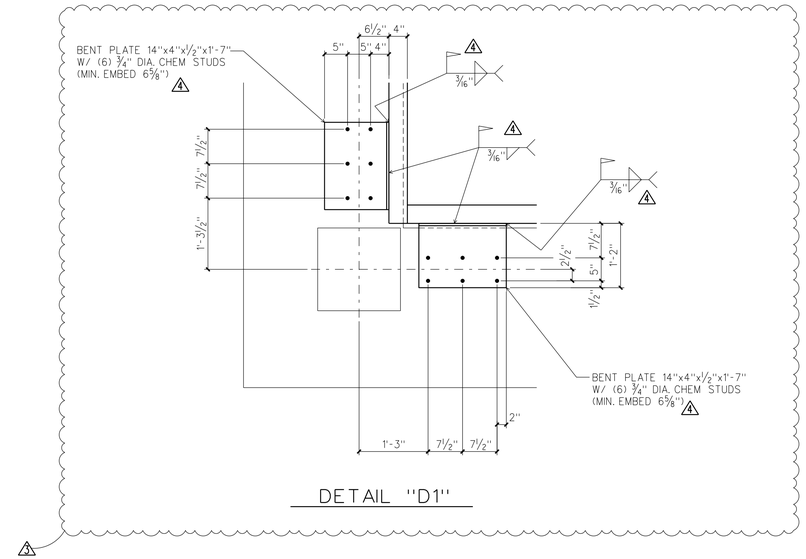

DETAIL "D1"

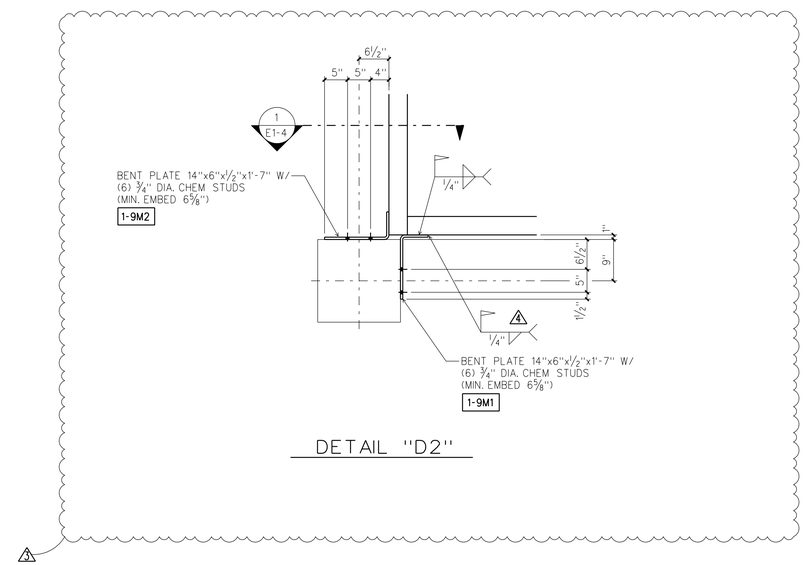

DETAIL "D2"

ERECTION NOTE:

- NORMAL ERECTION OPERATIONS INCLUDE THE CORRECTION OF MISFITS BY FIELD MODIFICATION, INCLUDING BUT NOT LIMITED TO, CUTTING, GRINDING, WELDING, SANDING, POLISHING, AND THE DRAWING OF ELEMENTS IN LINE THROUGH THE USE OF FORCE TO ENSURE A PROPER FIT AND SALEABLE PRODUCT. THIS WORK IS THE RESPONSIBILITY OF THE ERECTOR AND WILL BE PERFORMED AT NO ADDITIONAL COST AND/OR TIME IMPACTS TO THE FABRICATOR.
- NO BACK CHARGES WILL BE APPROVED BY THE FABRICATOR WITHOUT SUPPORTING DOCUMENTATION SUBMITTED IN WRITING. NO WORK SHALL BE PERFORMED WITHOUT WRITTEN APPROVAL FROM A REPRESENTATIVE OF THE FABRICATOR. WORK PERFORMED WITHOUT WRITTEN APPROVAL WILL BE THE RESPONSIBILITY OF THE TRADE PERFORMING THE WORK.

MATERIAL GENERAL NOTES:

1) ALL MATERIAL TO BE A36 UNLESS NOTED.
2) ALL W-SHAPES TO BE GRADE A992 Gr 50 (Fy=50) UNLESS NOTED.
3) ALL ROUND HSS TUBES TO BE A500 Gr B (Fy=42) UNLESS NOTED.
4) ALL RECTANGULAR OR SQUARE TUBES TO BE A500 Gr B (Fy=46) UNLESS NOTED
5) ALL STD. PIPES TO BE A53, TYPE E, Gr B (Fy=35) UNLESS NOTED

REVISION LOG

REV	DATE	DESCRIPTION
3	10/9/14	REVISED AS NOTED
4	10/16/14	REVISED AS NOTED

PRINT DISTRIBUTION

DATE	APP.	DIST.	SHOP	ERECTION

FINISH: CLEAN SSPC-SP2
1 S/C UNIVERSAL PRIMER
SHOP CONNECTIONS: WELDED
HOLES: UNLESS NOTED

STRUCTURE: BROCK SCHOOL OF BUSINESS - SAMFORD UNIV.
LOCATION: HOMEWOOD, AL
CUSTOMER: HOAR CONSTRUCTION
ARCHITECT: DAVIS ARCHITECTS
DETAIL: STAIR A

DRAWN: RB DATE: 7/14
CHECKED: JG DATE: 7/14
REF.DWGS. A7.01, S2.2, S2.3, S2.4

ITEM NO. 1
JOB NO. 5172
DWG.NO. E1-1

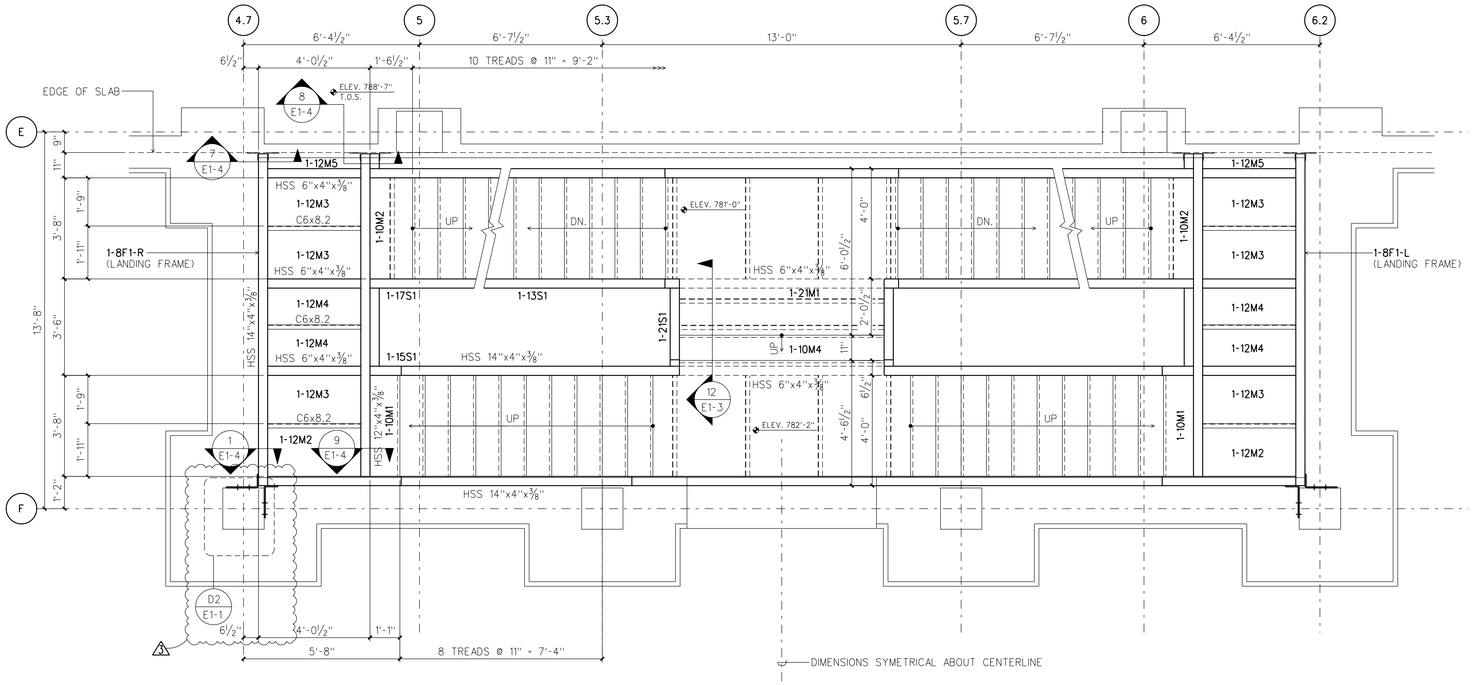

PLAN AT STAIR "A" - LEVEL 3

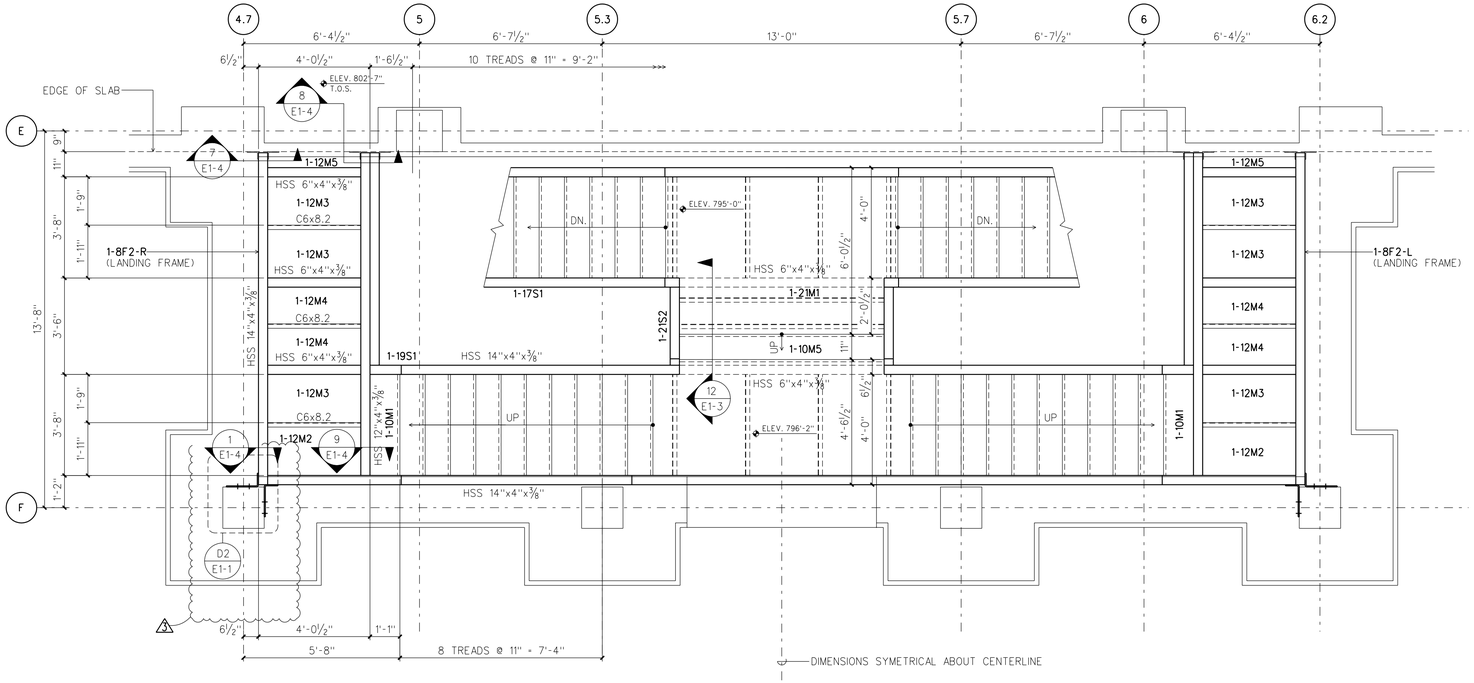

PLAN AT STAIR "A" - LEVEL 4

ERECTION NOTE:

- NORMAL ERECTION OPERATIONS INCLUDE THE CORRECTION OF MISFITS BY FIELD MODIFICATION, INCLUDING BUT NOT LIMITED TO, CUTTING, GRINDING, WELDING, SANDING, POLISHING, AND THE DRAWING OF ELEMENTS IN LINE THROUGH THE USE OF FORCE TO ENSURE A PROPER FIT AND SALEABLE PRODUCT. THIS WORK IS THE RESPONSIBILITY OF THE ERECTOR AND WILL BE PERFORMED AT NO ADDITIONAL COST AND/OR TIME IMPACTS TO THE FABRICATOR.
- NO BACK CHARGES WILL BE APPROVED BY THE FABRICATOR WITHOUT SUPPORTING DOCUMENTATION SUBMITTED IN WRITING. NO WORK SHALL BE PERFORMED WITHOUT WRITTEN APPROVAL FROM A REPRESENTATIVE OF THE FABRICATOR. WORK PERFORMED WITHOUT WRITTEN APPROVAL WILL BE THE RESPONSIBILITY OF THE TRADE PERFORMING THE WORK.

MATERIAL GENERAL NOTES:

1) ALL MATERIAL TO BE A36 UNLESS NOTED.
2) ALL W-SHAPES TO BE GRADE A992 Gr 50 (Fy=50) UNLESS NOTED.
3) ALL ROUND HSS TUBES TO BE A500 Gr B (Fy=42) UNLESS NOTED
4) ALL RECTANGULAR OR SQUARE TUBES TO BE A500 Gr B (Fy=46) UNLESS NOTED
5) ALL STD. PIPES TO BE A53, TYPE E, Gr B (Fy=35) UNLESS NOTED

REVISION LOG		
REV	DATE	DESCRIPTION
3	10/9/14	REVISED AS NOTED

PRINT DISTRIBUTION				
DATE	APP.	DIST.	SHOP	ERECTION

FINISH: CLEAN SSPC-SP2
1 S/C UNIVERSAL PRIMER
SHOP CONNECTIONS: WELDED
HOLES: UNLESS NOTED

STRUCTURE: BROCK SCHOOL OF BUSINESS - SAMFORD UNIV.
LOCATION: HOMEWOOD, AL
CUSTOMER: HOAR CONSTRUCTION
ARCHITECT: DAVIS ARCHITECTS
DETAIL: STAIR A

DRAWN: RB DATE: 7/14
CHECKED: JG DATE: 7/14
REF.DWGS. A7.01, S2.2, S2.3, S2.4

ITEM NO. 1
JOB NO. 5172
DWG.NO. E1-2

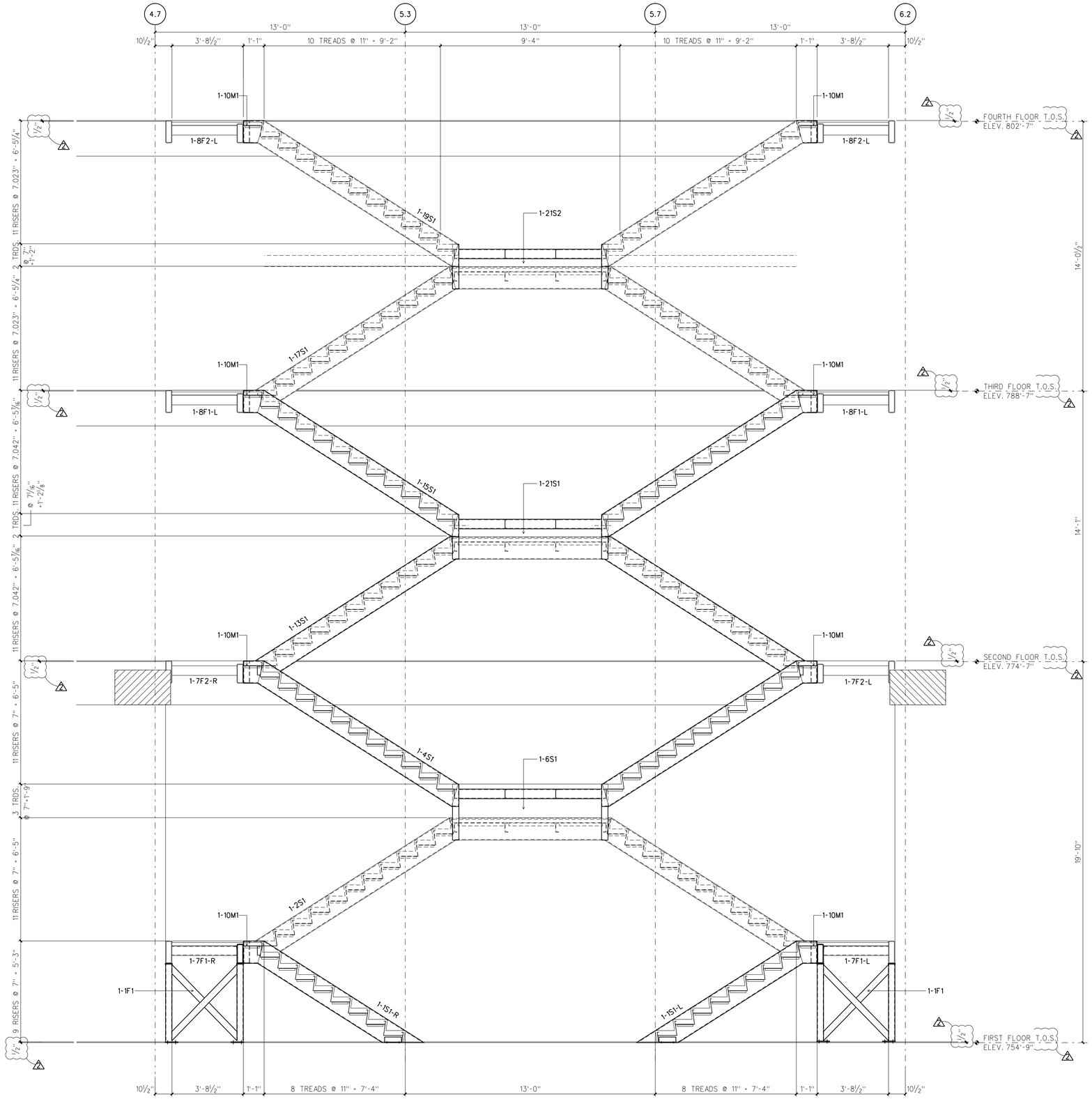

SECTION "10" ⚠

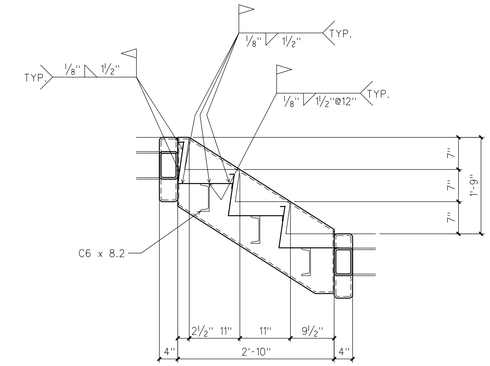

SECTION "11" ⚠

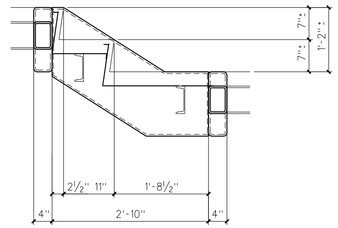

SECTION "12" ⚠

ERECTION NOTE:

- NORMAL ERECTION OPERATIONS INCLUDE THE CORRECTION OF MISFITS BY FIELD MODIFICATION, INCLUDING BUT NOT LIMITED TO, CUTTING, GRINDING, WELDING, SANDING, POLISHING, AND THE DRAWING OF ELEMENTS IN LINE THROUGH THE USE OF FORCE TO ENSURE A PROPER FIT AND SALEABLE PRODUCT. THIS WORK IS THE RESPONSIBILITY OF THE ERECTOR AND WILL BE PERFORMED AT NO ADDITIONAL COST AND/OR TIME IMPACTS TO THE FABRICATOR.
- NO BACK CHARGES WILL BE APPROVED BY THE FABRICATOR WITHOUT SUPPORTING DOCUMENTATION SUBMITTED IN WRITING. NO WORK SHALL BE PERFORMED WITHOUT WRITTEN APPROVAL FROM A REPRESENTATIVE OF THE FABRICATOR. WORK PERFORMED WITHOUT WRITTEN APPROVAL WILL BE THE RESPONSIBILITY OF THE TRADE PERFORMING THE WORK.

MATERIAL GENERAL NOTES:

1) ALL MATERIAL TO BE A36 UNLESS NOTED.
2) ALL W-SHAPES TO BE GRADE A992 Gr 50 (Fy=50) UNLESS NOTED.
3) ALL ROUND HSS TUBES TO BE A500 Gr B (Fy=42) UNLESS NOTED.
4) ALL RECTANGULAR OR SQUARE TUBES TO BE A500 Gr B (Fy=46) UNLESS NOTED
5) ALL STD. PIPES TO BE A53, TYPE E, Gr B (Fy=35) UNLESS NOTED

REVISION LOG

REV	DATE	DESCRIPTION
1	8/14	REVISED TOP OF STRINGER ELEV.

PRINT DISTRIBUTION

DATE	APP.	DIST.	SHOP	ERECTION

FINISH: CLEAN SSPC-SP2
1 S/C UNIVERSAL PRIMER
SHOP CONNECTIONS: WELDED
HOLES: UNLESS NOTED

STRUCTURE: BROCK SCHOOL OF BUSINESS - SAMFORD UNIV.
LOCATION: HOMEWOOD, AL
CUSTOMER: HOAR CONSTRUCTION
ARCHITECT: DAVIS ARCHITECTS
DETAIL: STAIR A

DRAWN: RB DATE: 7/14
CHECKED: JG DATE: 7/14
REF.DWGS. A7.01, S2.2, S2.3, S2.4

ITEM NO. 1
JOB NO. 5172
DWG.NO. E1-3

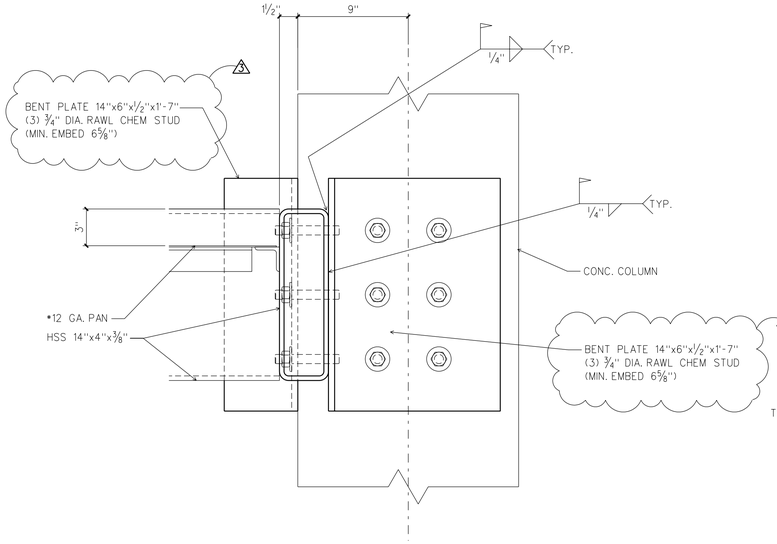

SECTION "1"

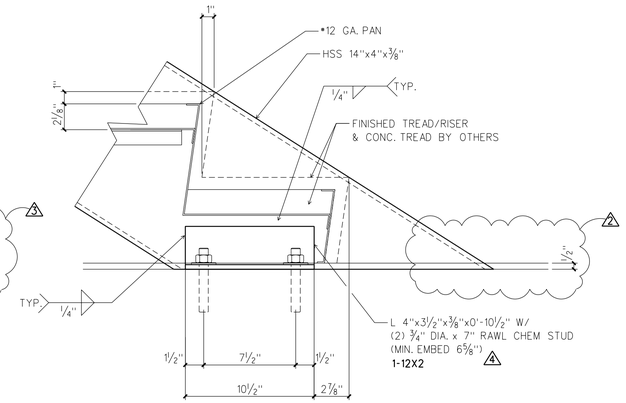

SECTION "2"

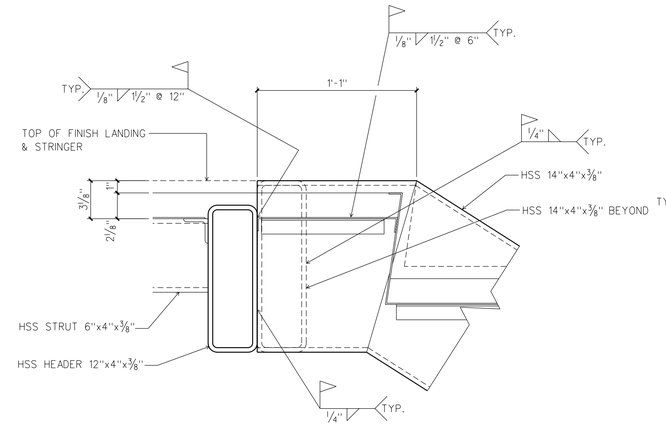

SECTION "3"

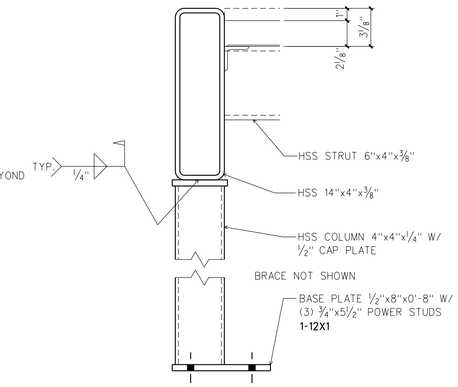

SECTION "4"

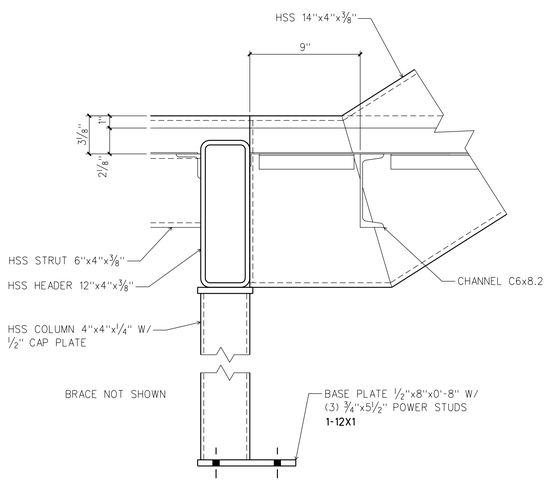

SECTION "5"

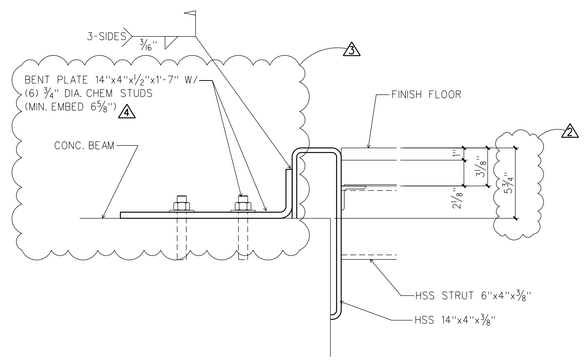

SECTION "6"

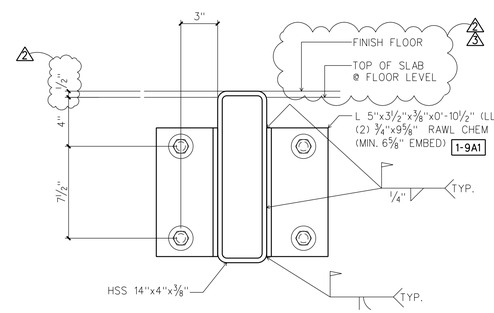

SECTION "7"

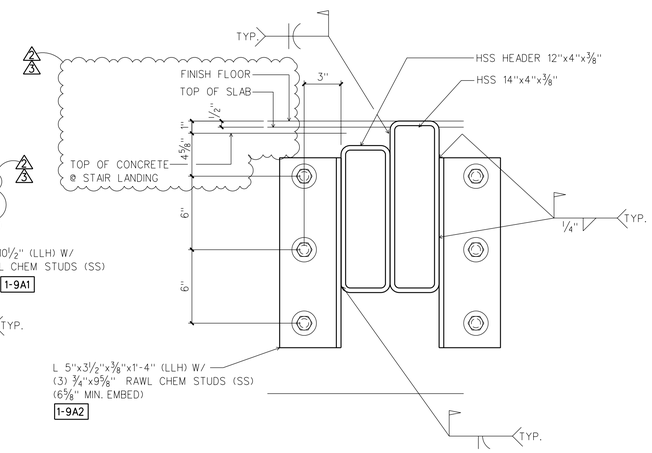

SECTION "8"

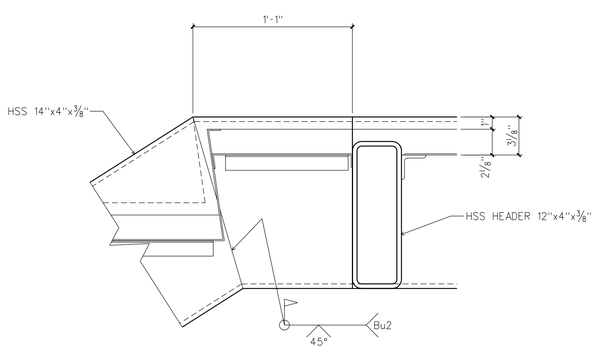

SECTION "9"

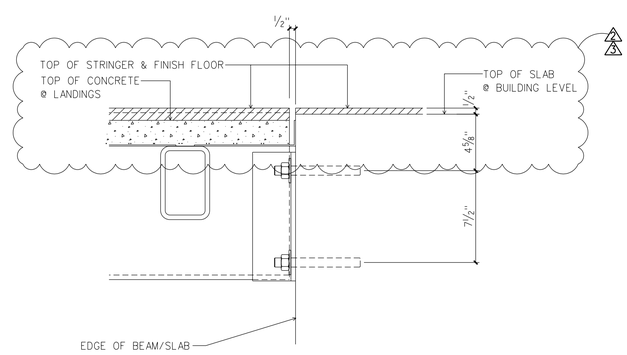

SECTION "13"

ERECTION NOTE:

- NORMAL ERECTION OPERATIONS INCLUDE THE CORRECTION OF MISFITS BY FIELD MODIFICATION, INCLUDING BUT NOT LIMITED TO, CUTTING, GRINDING, WELDING, SANDING, POLISHING, AND THE DRAWING OF ELEMENTS IN LINE THROUGH THE USE OF FORCE TO ENSURE A PROPER FIT AND SALEABLE PRODUCT. THIS WORK IS THE RESPONSIBILITY OF THE ERECTOR AND WILL BE PERFORMED AT NO ADDITIONAL COST AND/OR TIME IMPACTS TO THE FABRICATOR.
- NO BACK CHARGES WILL BE APPROVED BY THE FABRICATOR WITHOUT SUPPORTING DOCUMENTATION SUBMITTED IN WRITING. NO WORK SHALL BE PERFORMED WITHOUT WRITTEN APPROVAL FROM A REPRESENTATIVE OF THE FABRICATOR. WORK PERFORMED WITHOUT WRITTEN APPROVAL WILL BE THE RESPONSIBILITY OF THE TRADE PERFORMING THE WORK.

MATERIAL GENERAL NOTES:

1) ALL MATERIAL TO BE A36 UNLESS NOTED.
2) ALL W-SHAPES TO BE GRADE A992 Gr 50 (Fy-50) UNLESS NOTED.
3) ALL ROUND HSS TUBES TO BE A500 Gr B (Fy-42) UNLESS NOTED
4) ALL RECTANGULAR OR SQUARE TUBES TO BE A500 Gr B (Fy-46) UNLESS NOTED
5) ALL STD. PIPES TO BE A53, TYPE E, Gr B (Fy-35) UNLESS NOTED

REVISION LOG

REV	DATE	DESCRIPTION
1	8/14	REVISED TOP OF STRINGER ELEV.
2	10/3/14	REVISED PER F.F. ELEVATIONS
3	10/9/14	REVISED AS NOTED
4	10/16/14	REVISED AS NOTED

PRINT DISTRIBUTION

DATE	APP.	DIST.	SHOP	ERECTION

FINISH: CLEAN SSPC-SP2
1 S/C UNIVERSAL PRIMER
SHOP CONNECTIONS: WELDED
HOLES: UNLESS NOTED

STRUCTURE: BROCK SCHOOL OF BUSINESS - SAMFORD UNIV.
LOCATION: HOMEWOOD, AL
CUSTOMER: HOAR CONSTRUCTION
ARCHITECT: DAVIS ARCHITECTS
DETAIL: STAIR A

DRAWN: RB DATE: 7/14
CHECKED: JG DATE: 7/14
REF.DWGS. A7.01, S2.2, S2.3, S2.4

ITEM NO. 1
JOB NO. 5172
DWG.NO. E1-4

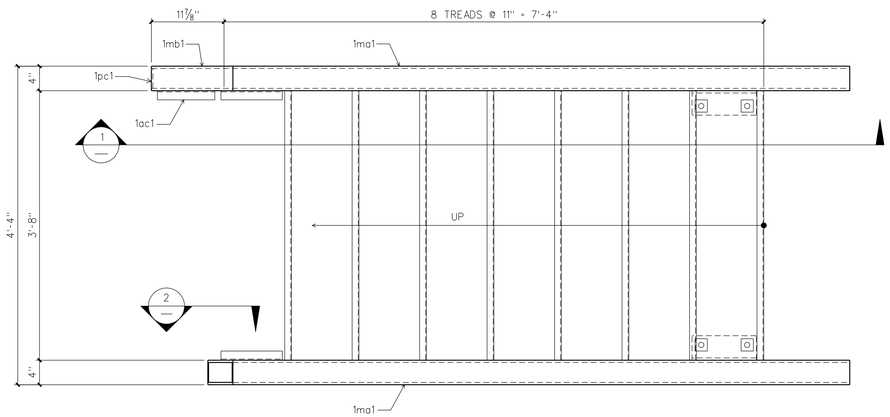

ONE ~ STAIR (AS SHOWN) MK. 1-1S1-R

ONE ~ STAIR (OPP. HAND) MK. 1-1S1-L

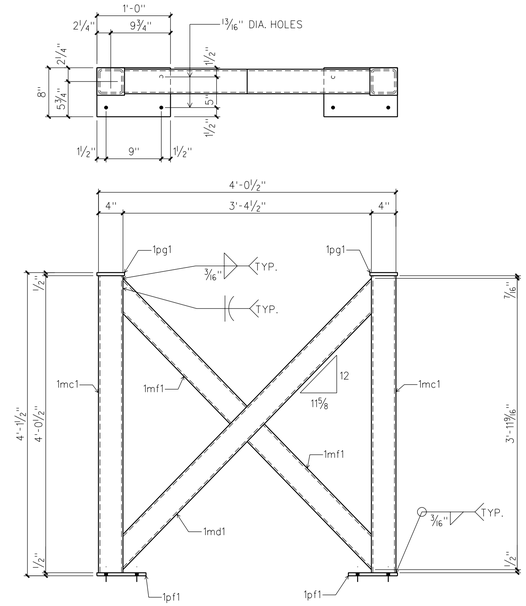

2 ~ SUPPORT FRAMES MK. 1-1F1

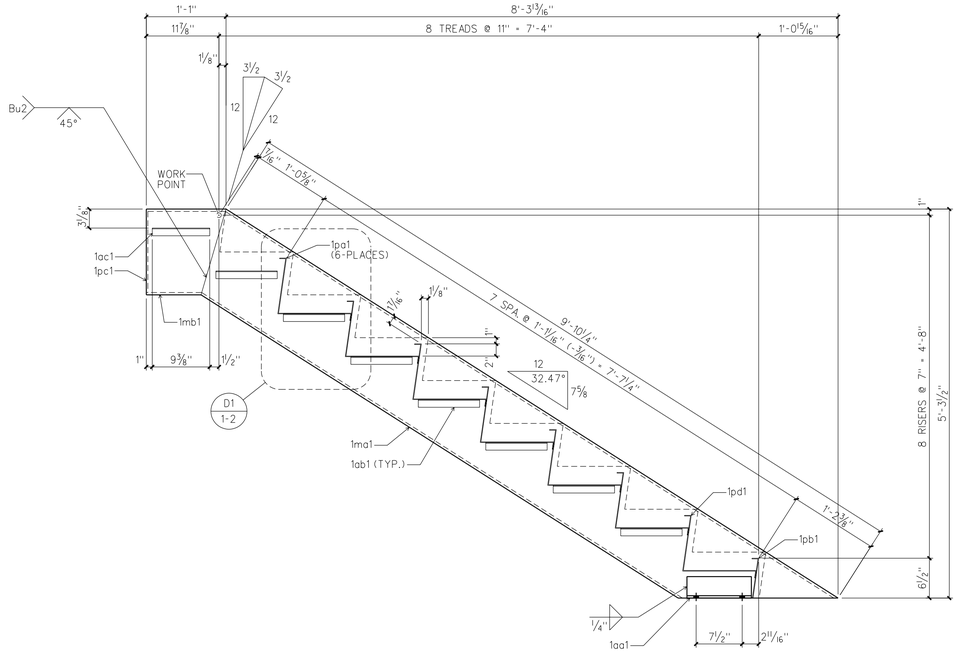

SECTION "1"

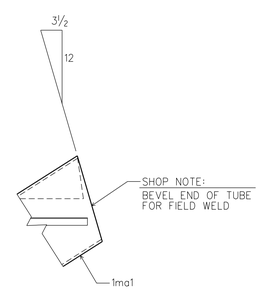

SECTION "2"

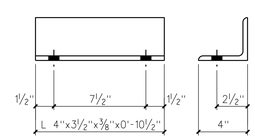

4 ~ ANGLES MK. 1aa1

BILL OF MATERIAL

SHIP QTY	NO PCS	MARK	DESCRIPTION	LENGTH FT	LENGTH INS	REMARKS
ONE		1-1S1-R	STAIR			
ONE		1-1S1-L	STAIR			
	4	1ma1	HSS 14"x4"x⅜"	9	10¼	
	2	1mb1	HSS 14"x4"x⅜"	1	1	
	12	1pa1	PLATE #12 GA. x 22 13/16"	3	8	DETAIL SHT. 1-11
	2	1pb1	PLATE #12 GA. x 7 7/16"	3	8	DETAIL SHT. 1-11
	2	1pc1	PLATE ¼"x3¼"	1	1¼	
	2	1pd1	PLATE #12 GA. x 22 13/16"	3	8	DETAIL SHT. 1-11
	4	1aa1	L 4"x3½"x⅜"	0	10½	
	28	1ab1	L 1½"x1½"x3/16"	0	10	
	2	1ac1	L 1½"x1½"x3/16"	0	9⅜	
2		1-1F1	SUPPORT FRAME			
	4	1mc1	HSS 4"x4"x¼"	4	0½	
	2	1md1	HSS 4"x4"x¼"	5	2 5/16	
	4	1mf1	HSS 4"x4"x¼"	2	5⅛	
	4	1pf1	PLATE ½" x 8"	1	0	
	4	1pg1	PLATE ½" x 4½"	0	4½	
8		1-1P1	COVER PLATE			
	8		PLATE #12 GA. x 3"	0	3	

MATERIAL GENERAL NOTES:

1) ALL MATERIAL TO BE A36 UNLESS NOTED.
2) ALL W-SHAPES TO BE GRADE A992 Gr 50 (Fy=50) UNLESS NOTED.
3) ALL ROUND HSS TUBES TO BE A500 Gr B (Fy=42) UNLESS NOTED.
4) ALL RECTANGULAR OR SQUARE TUBES TO BE A500 Gr B (Fy=46) UNLESS NOTED
5) ALL STD. PIPES TO BE A53, TYPE E, Gr B (Fy=35) UNLESS NOTED

REVISION LOG		
REV	DATE	DESCRIPTION

PRINT DISTRIBUTION				
DATE	APP.	DIST.	SHOP	ERECTION

FINISH: CLEAN SSPC-SP6
1 S/C UNIVERSAL PRIMER

SHOP CONNECTIONS:
HOLES: 13/16" UNLESS NOTED

STRUCTURE: BROCK SCHOOL OF BUSINESS - SAMFORD UNIV.
LOCATION: HOMEWOOD, AL
CUSTOMER: HOAR CONSTRUCTION
ARCHITECT: DAVIS ARCHITECTS
DETAIL: STAIR A

DRAWN: RB DATE: 7/14
CHECKED: JG DATE: 7/14
REF.DWGS. E1-1 THRU E1-4

ITEM NO. 1
JOB NO. 5172
DWG.NO. 1-1

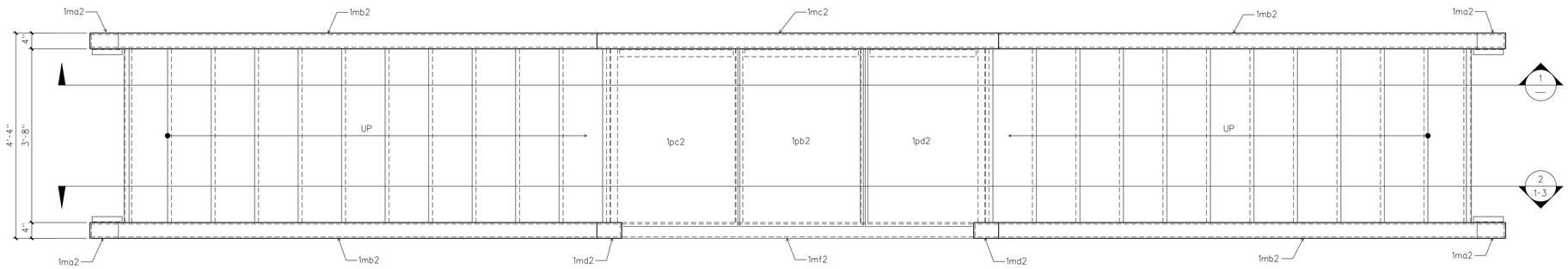

ONE ~ STAIR MK. 1-2S1

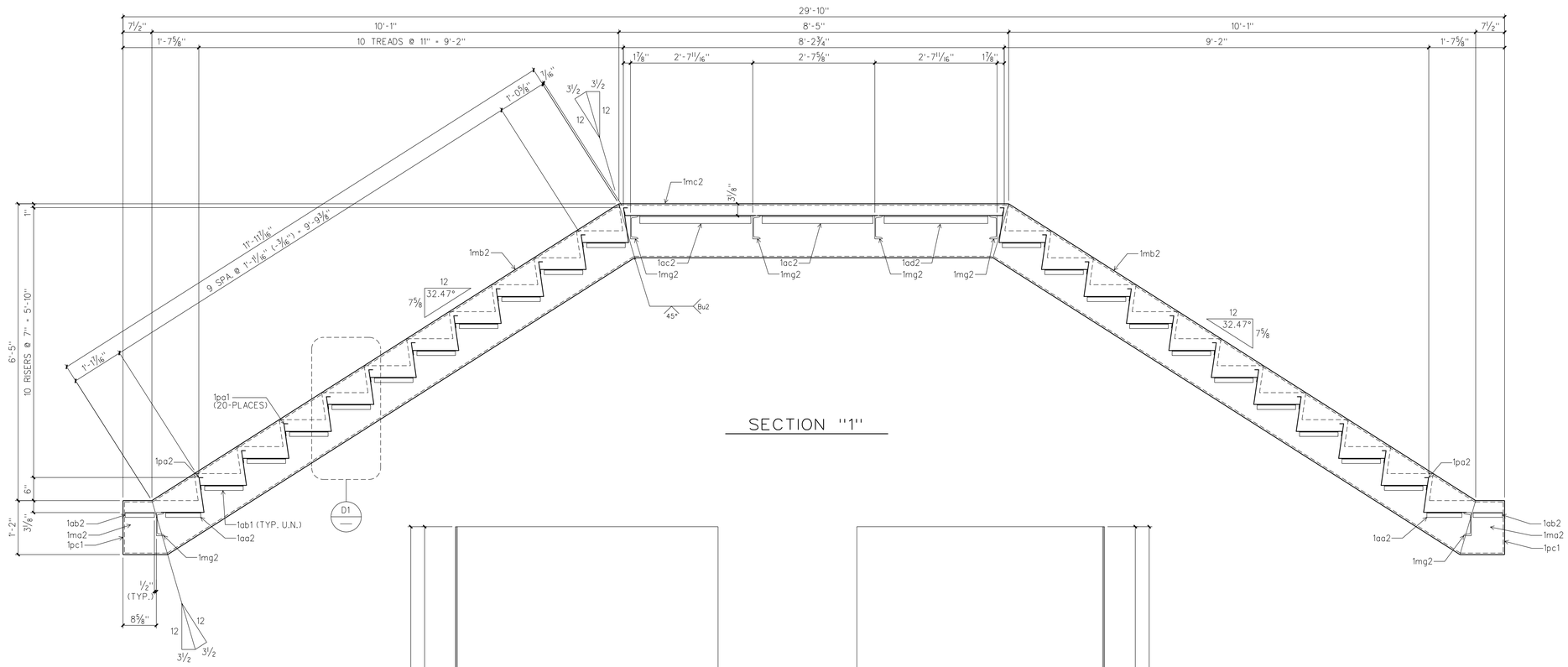

SECTION "1"

BILL OF MATERIAL						
SHIP QTY	NO PCS	MARK	DESCRIPTION	LENGTH FT	LENGTH INS	REMARKS
ONE		1-2S1	STAIR			
	4	1ma2	HSS 14"x4"x3/8"	0	11 9/16	
	4	1mb2	HSS 14"x4"x3/8"	12	3½	
	ONE	1mc2	HSS 14"x4"x3/8"	8	5	
	2	1md2	HSS 14"x4"x3/8"	0	6	
	ONE	1mf2	HSS 6"x4"x3/16"	7	5	
	6	1mg2	C6 x 8.2	3	8	
	2	1pa2	PLATE #12 GA. x 21"	3	8	DETAIL SHT. 1-11
	20	1pa1	PLATE #12 GA. x 22 13/16"	3	8	DETAIL SHT. 1-11
	4	1pc1	PLATE ¼" x 3¼"	1	1¼	
	40	1ab1	L ½"x½"x3/16"	0	10	
	4	1aa2	L ½"x½"x3/16"	0	9	
	4	1ab2	L ½"x½"x3/16"	0	7½	
	2	1ac2	L 2"x2"x¼"	2	4¾	
	ONE	1ad2	L 2"x2"x¼"	2	2⅞	
	ONE	1pb2	PLATE #12 GA. x 31 3/16"	3	9	
	ONE	1pc2	PLATE #12 GA. x 34 13/16"	3	9	
	ONE	1pd2	PLATE #12 GA. x 32⅞"	3	9	

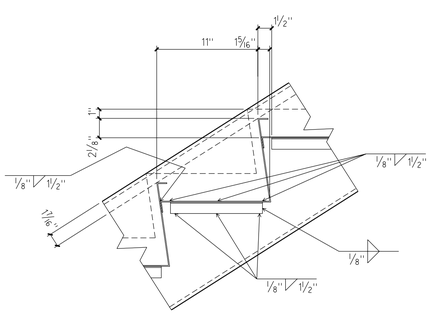

DETAIL "D1"

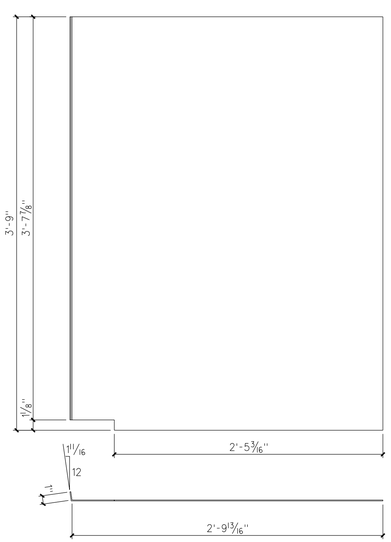

ONE ~ PLATE MK. 1pc2

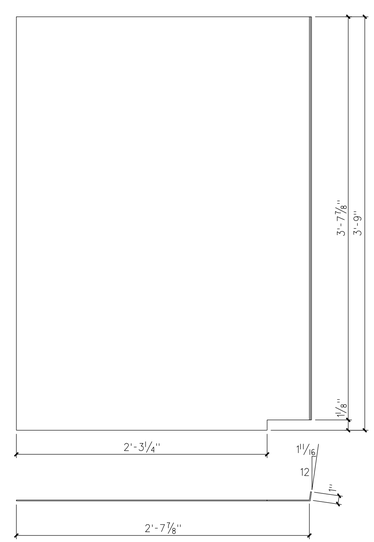

ONE ~ PLATE MK. 1pd2

MATERIAL GENERAL NOTES:

1) ALL MATERIAL TO BE A36 UNLESS NOTED.
2) ALL W-SHAPES TO BE GRADE A992 Gr 50 (Fy=50) UNLESS NOTED.
3) ALL ROUND HSS TUBES TO BE A500 Gr B (Fy=42) UNLESS NOTED
4) ALL RECTANGULAR OR SQUARE TUBES TO BE A500 Gr B (Fy=46) UNLESS NOTED
5) ALL STD. PIPES TO BE A53, TYPE E, Gr B (Fy=35) UNLESS NOTED

REVISION LOG		
REV	DATE	DESCRIPTION

PRINT DISTRIBUTION				
DATE	APP.	DIST.	SHOP	ERECTION

FINISH: CLEAN SSPC-SP6
1 S/C UNIVERSAL PRIMER
SHOP CONNECTIONS:
HOLES: UNLESS NOTED

STRUCTURE: BROCK SCHOOL OF BUSINESS - SAMFORD UNIV.
LOCATION: HOMEWOOD, AL
CUSTOMER: HOAR CONSTRUCTION
ARCHITECT: DAVIS ARCHITECTS
DETAIL: STAIR A

DRAWN: RB DATE: 7/14
CHECKED: JG DATE: 7/14
REF.DWGS. E1-1 THRU E1-4

ITEM NO. 1
JOB NO. 5172
DWG.NO. 1-2

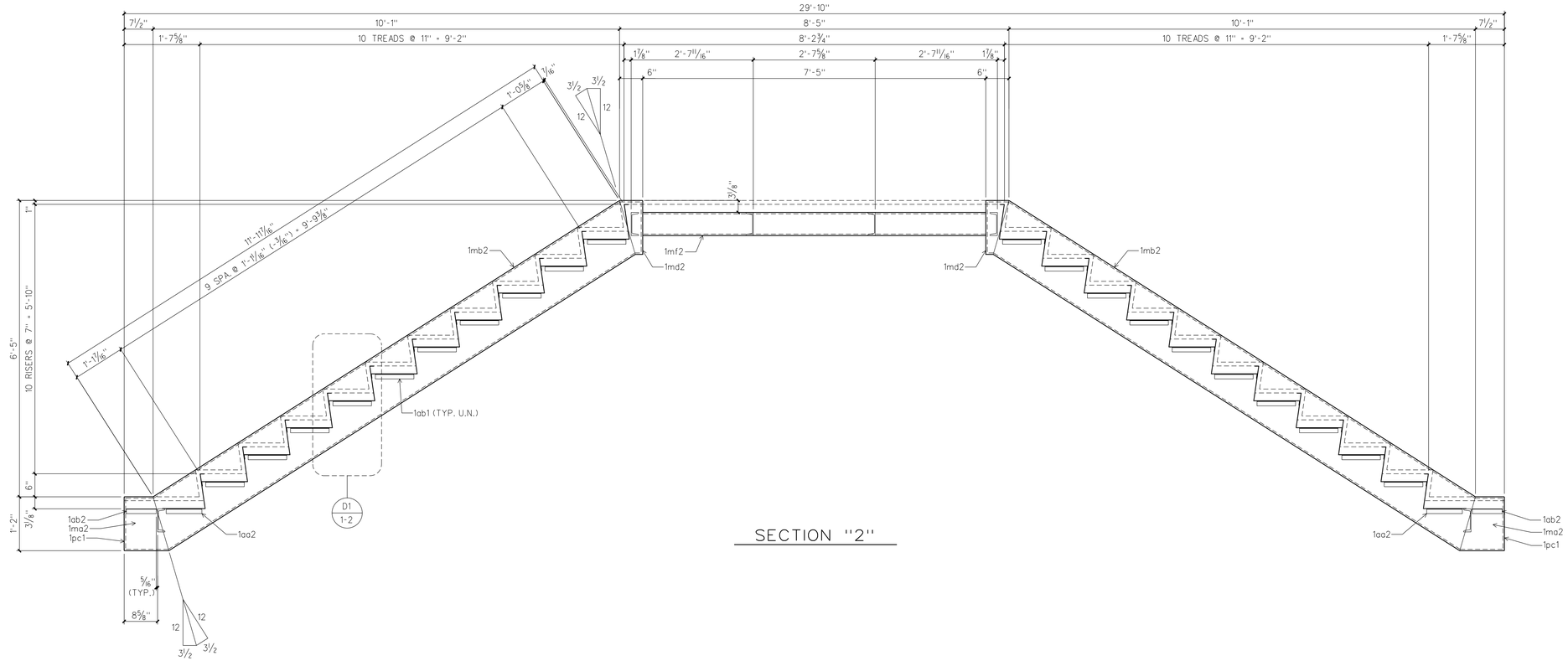

SECTION "2"

BILL OF MATERIAL

SHIP QTY	NO PCS	MARK	DESCRIPTION	LENGTH FT	LENGTH INS	REMARKS

MATERIAL GENERAL NOTES:

1) ALL MATERIAL TO BE A36 UNLESS NOTED.
2) ALL W-SHAPES TO BE GRADE A992 Gr 50 (Fy=50) UNLESS NOTED.
3) ALL ROUND HSS TUBES TO BE A500 Gr B (Fy=42) UNLESS NOTED
4) ALL RECTANGULAR OR SQUARE TUBES TO BE A500 Gr B (Fy=46) UNLESS NOTED
5) ALL STD. PIPES TO BE A53, TYPE E, Gr B (Fy=35) UNLESS NOTED

REVISION LOG		
REV	DATE	DESCRIPTION

PRINT DISTRIBUTION				
DATE	APP.	DIST.	SHOP	ERECTION

FINISH: CLEAN SSPC-SP6
1 S/C UNIVERSAL PRIMER
SHOP CONNECTIONS:
HOLES: UNLESS NOTED

STRUCTURE: BROCK SCHOOL OF BUSINESS - SAMFORD UNIV.
LOCATION: HOMEWOOD, AL
CUSTOMER: HOAR CONSTRUCTION
ARCHITECT: DAVIS ARCHITECTS
DETAIL: STAIR A

DRAWN: RB DATE: 7/14
CHECKED: JG DATE: 7/14
REF.DWGS. E1-1 THRU E1-4

ITEM NO. 1
JOB NO. 5172
DWG.NO. 1-3

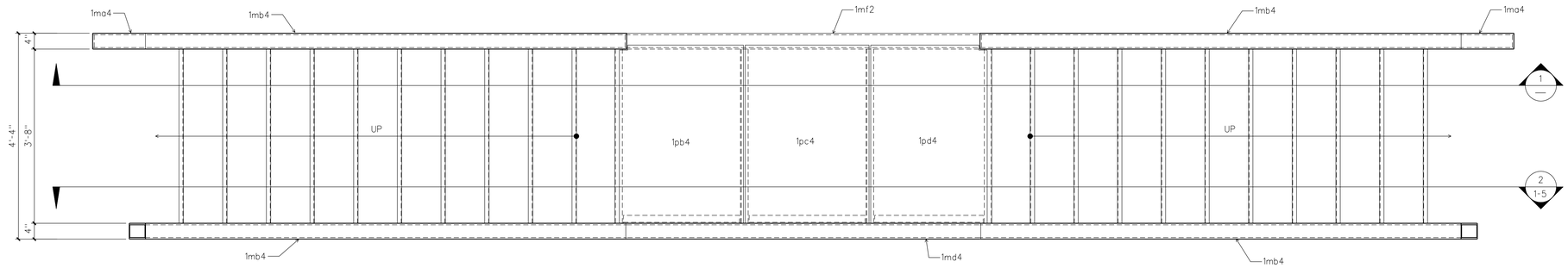

ONE ~ STAIR MK. 1-4S1

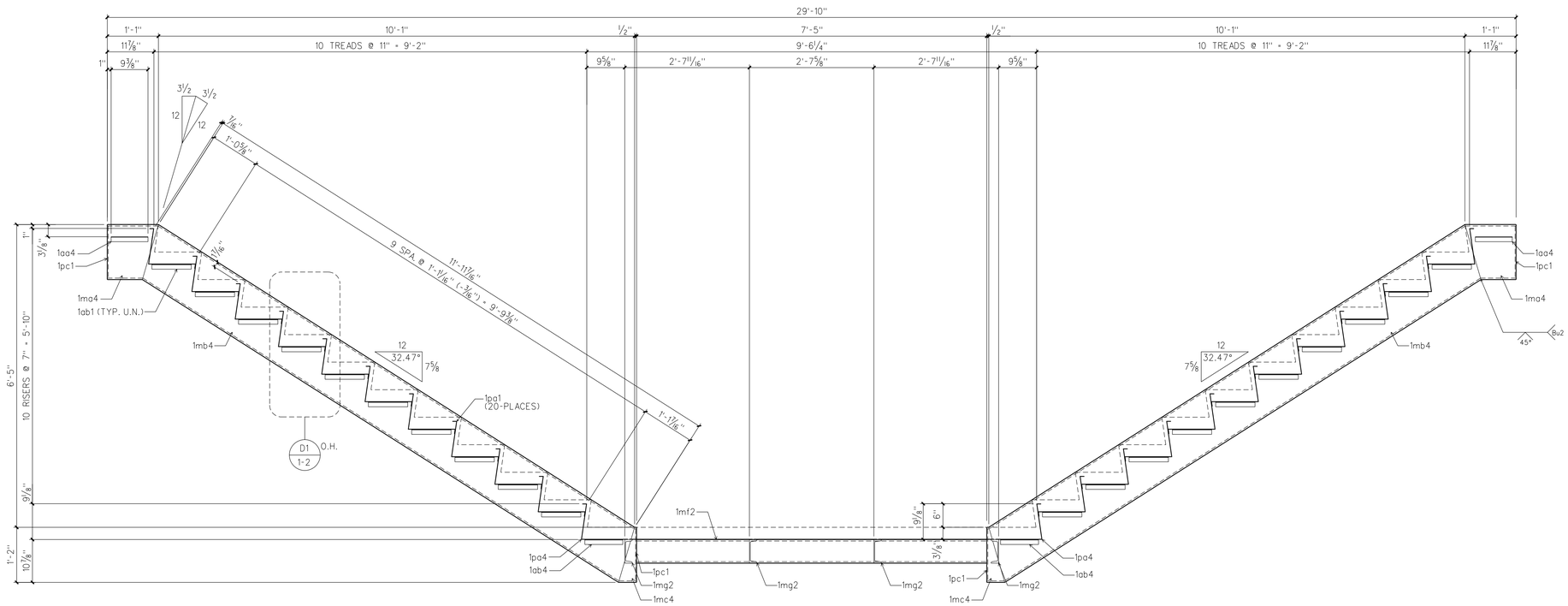

SECTION "1"

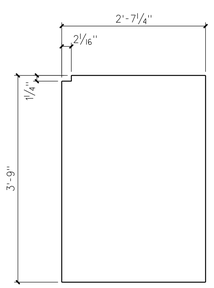

ONE ~ PLATE MK. 1pb4

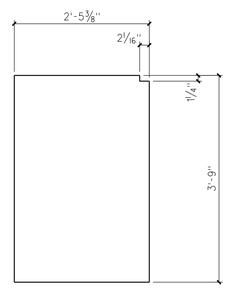

ONE ~ PLATE MK. 1pd4

BILL OF MATERIAL

SHIP QTY	NO PCS	MARK	DESCRIPTION	LENGTH FT	LENGTH INS	REMARKS
ONE		1-4S1	STAIRS			
	2	1ma4	HSS 14"x4"x3/8"	1	1	
	4	1mb4	HSS 14"x4"x3/8"	12	3 1/2	
	2	1mc4	HSS 14"x4"x3/8"	0	4 9/16	
	ONE	1md4	HSS 14"x4"x3/8"	8	2 1/8	
	ONE	1mf2	HSS 6"x4"x3/8"	7	5	
	4	1mg2	C6 x 8.2	3	8	
	2	1pa4	PLATE #12 GA. x 21 5/8"	3	8	DETAIL SHT. 1-11
	20	1pa1	PLATE #12 GA. x 22 13/16"	3	8	DETAIL SHT. 1-11
	4	1pc1	PLATE 1/4" x 3 1/4"	1	1 1/4	
	40	1ab1	L 1 1/2"x1 1/2"x3/16"	0	10	
	2	1aa4	L 1 1/2"x1 1/2"x3/16"	0	9 3/8	
	4	1ab4	L 1 1/2"x1 1/2"x3/16"	0	9 5/8	
	2	1ac2	L 2"x2"x1/4"	2	4 3/4	
	ONE	1ad2	L 2"x2"x1/4"	2	2 7/8	
	ONE	1pb4	PLATE #12 GA. x 31 1/4"	3	9	
	ONE	1pc4	PLATE #12 GA. x 31 3/16"	3	9	
	ONE	1pd4	PLATE #12 GA. x 29 3/8"	3	9	

MATERIAL GENERAL NOTES:

1) ALL MATERIAL TO BE A36 UNLESS NOTED.
2) ALL W-SHAPES TO BE GRADE A992 Gr 50 (Fy=50) UNLESS NOTED.
3) ALL ROUND HSS TUBES TO BE A500 Gr B (Fy=42) UNLESS NOTED
4) ALL RECTANGULAR OR SQUARE TUBES TO BE A500 Gr B (Fy=46) UNLESS NOTED
5) ALL STD. PIPES TO BE A53, TYPE E, Gr B (Fy=35) UNLESS NOTED

REVISION LOG		
REV	DATE	DESCRIPTION

PRINT DISTRIBUTION				
DATE	APP.	DIST.	SHOP	ERECTION

FINISH: CLEAN SSPC-SP6
1 S/C UNIVERSAL PRIMER
SHOP CONNECTIONS:
HOLES: UNLESS NOTED

STRUCTURE: BROCK SCHOOL OF BUSINESS - SAMFORD UNIV.
LOCATION: HOMEWOOD, AL
CUSTOMER: HOAR CONSTRUCTION
ARCHITECT: DAVIS ARCHITECTS
DETAIL: STAIR A

DRAWN: RB DATE: 7/14
CHECKED: JG DATE: 7/14
REF.DWGS. E1-1 THRU E1-4

ITEM NO. 1
JOB NO. 5172
DWG.NO. 1-4

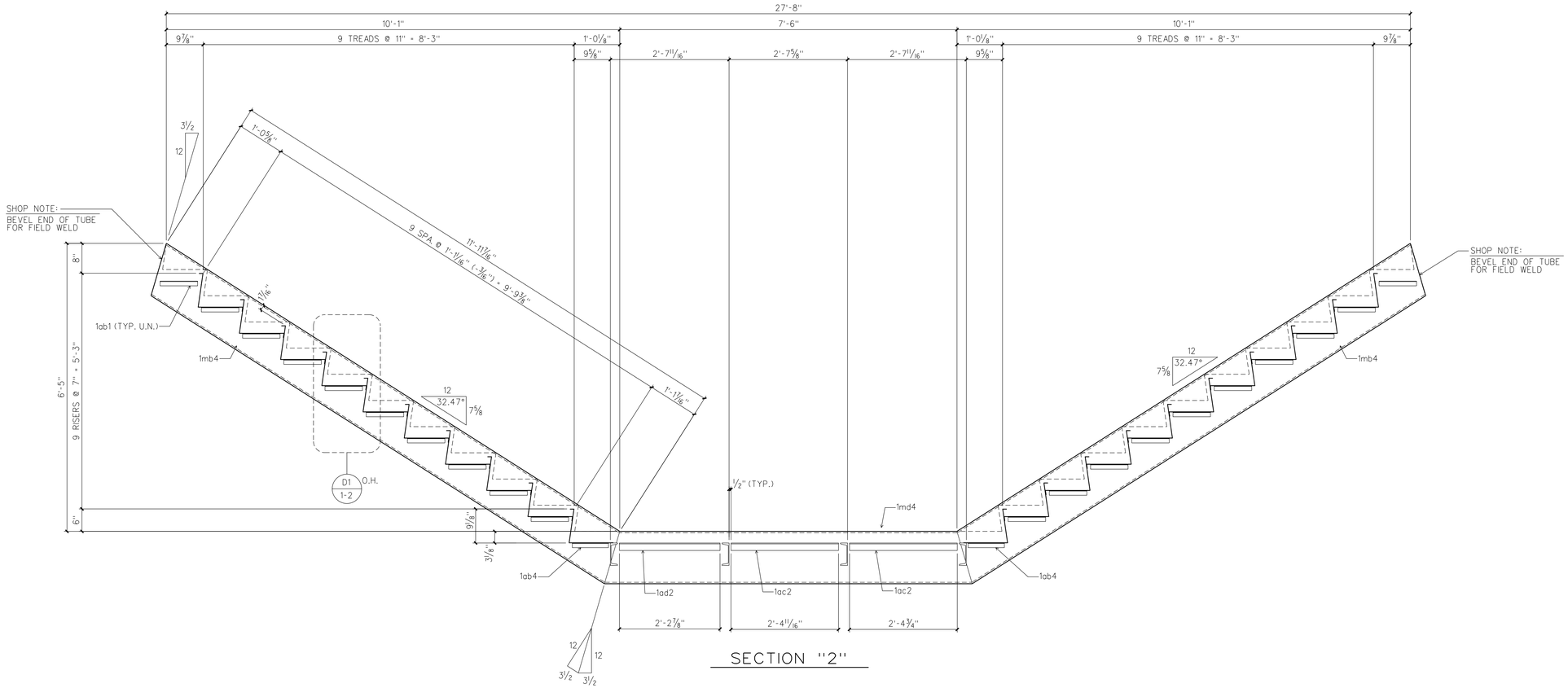

SECTION "2"

BILL OF MATERIAL

SHIP QTY	NO PCS	MARK	DESCRIPTION	LENGTH FT	LENGTH INS	REMARKS

MATERIAL GENERAL NOTES:

1) ALL MATERIAL TO BE A36 UNLESS NOTED.
2) ALL W-SHAPES TO BE GRADE A992 Gr 50 (Fy=50) UNLESS NOTED.
3) ALL ROUND HSS TUBES TO BE A500 Gr B (Fy=42) UNLESS NOTED
4) ALL RECTANGULAR OR SQUARE TUBES TO BE A500 Gr B (Fy=46) UNLESS NOTED
5) ALL STD. PIPES TO BE A53, TYPE E, Gr B (Fy=35) UNLESS NOTED

REVISION LOG		
REV	DATE	DESCRIPTION

PRINT DISTRIBUTION				
DATE	APP.	DIST.	SHOP	ERECTION

FINISH: CLEAN SSPC-SP6
1 S/C UNIVERSAL PRIMER
SHOP CONNECTIONS:
HOLES: UNLESS NOTED

STRUCTURE: BROCK SCHOOL OF BUSINESS - SAMFORD UNIV.
LOCATION: HOMEWOOD, AL
CUSTOMER: HOAR CONSTRUCTION
ARCHITECT: DAVIS ARCHITECTS
DETAIL: STAIR A

DRAWN: RB DATE: 7/14
CHECKED: JG DATE: 7/14
REF.DWGS. E1-1 THRU E1-4

ITEM NO. 1
JOB NO. 5172
DWG.NO. 1-5

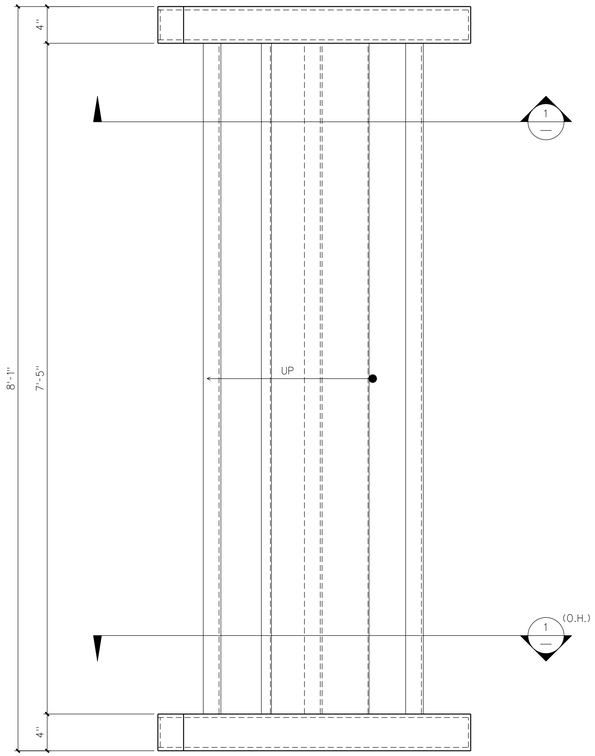

ONE ~ STRINGER MK. 1-6S1

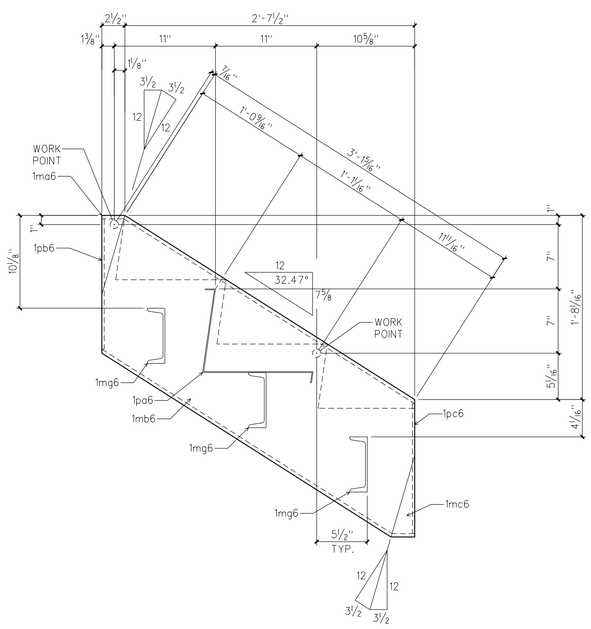

SECTION "1"

BILL OF MATERIAL

SHIP QTY	NO PCS	MARK	DESCRIPTION	LENGTH FT	LENGTH INS	REMARKS
ONE		1-6S1	STAIR			
	2	1ma6	HSS 14"x4"x3/8"	0	2 1/2	
	2	1mb6	HSS 14"x4"x3/8"	3	7 3/16	
	2	1mc6	HSS 14"x4"x3/8"	0	2 9/16	
	3	1mg6	C6 x 8.2	7	5	
	ONE	1pa6	PLATE #12 GA. x 22 13/16"	7	5	DETAIL SHT. 1-12
	2	1pb6	PLATE 1/4" x 3 1/4"	1	2 3/16	
	2	1pc6	PLATE 1/4" x 3 1/4"	1	2 1/8	

MATERIAL GENERAL NOTES:

1) ALL MATERIAL TO BE A36 UNLESS NOTED.
2) ALL W-SHAPES TO BE GRADE A992 Gr 50 (Fy=50) UNLESS NOTED.
3) ALL ROUND HSS TUBES TO BE A500 Gr B (Fy=42) UNLESS NOTED.
4) ALL RECTANGULAR OR SQUARE TUBES TO BE A500 Gr B (Fy=46) UNLESS NOTED
5) ALL STD. PIPES TO BE A53, TYPE E, Gr B (Fy=35) UNLESS NOTED

REVISION LOG		
REV	DATE	DESCRIPTION

PRINT DISTRIBUTION				
DATE	APP.	DIST.	SHOP	ERECTION

FINISH: CLEAN SSPC-SP6
1 S/C UNIVERSAL PRIMER
SHOP CONNECTIONS:
HOLES: UNLESS NOTED

STRUCTURE: BROCK SCHOOL OF BUSINESS - SAMFORD UNIV.
LOCATION: HOMEWOOD, AL
CUSTOMER: HOAR CONSTRUCTION
ARCHITECT: DAVIS ARCHITECTS
DETAIL: STAIR A

DRAWN: RB DATE: 7/14
CHECKED: JG DATE: 7/14
REF.DWGS. E1-1 THRU E1-4

ITEM NO. 1
JOB NO. 5172
DWG.NO. 1-6

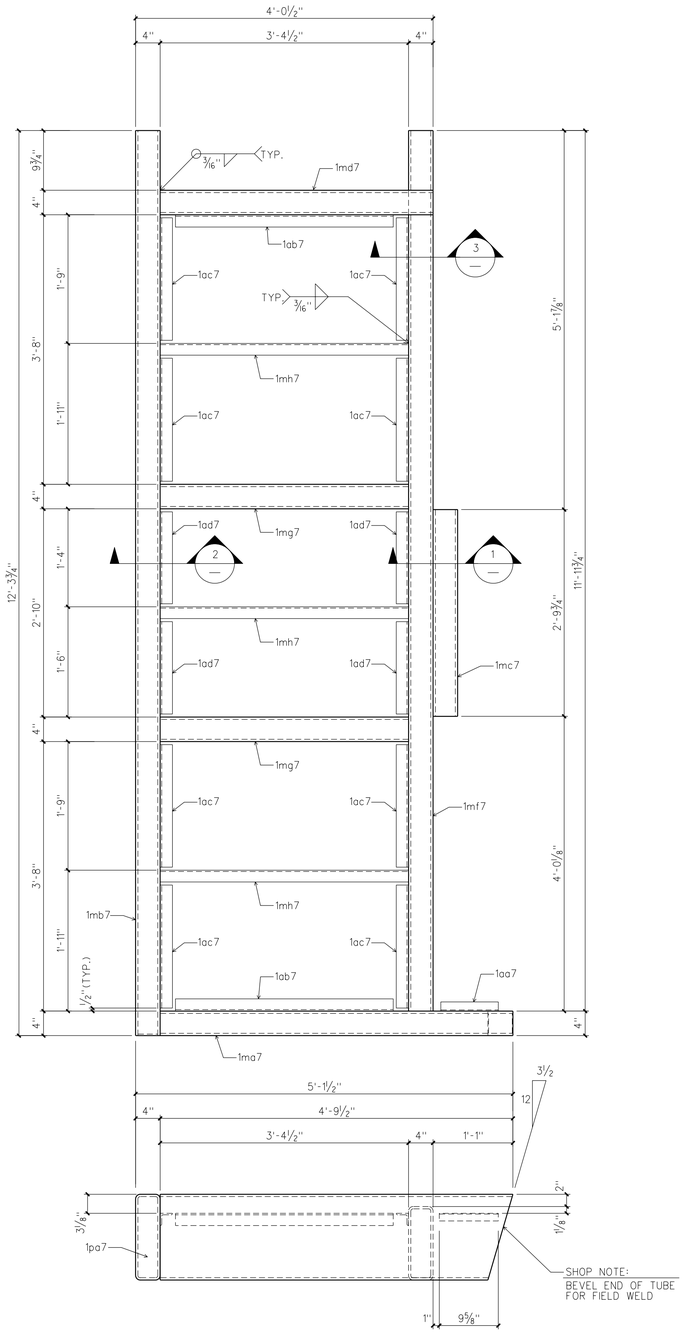

ONE ~ LANDING FRAME (AS SHOWN) MK. 1-7F1-R

ONE ~ LANDING FRAME (OPP. HAND) MK. 1-7F1-L

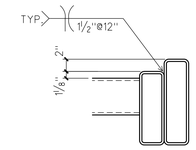

SECTION "1"

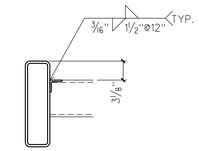

SECTION "2"

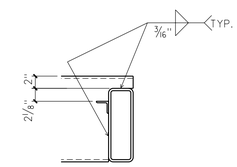

SECTION "3"

BILL OF MATERIAL

SHIP QTY	NO PCS	MARK	DESCRIPTION	LENGTH FT	LENGTH INS	REMARKS
ONE		1-7F1-R	LANDING FRAME			
ONE		1-7F1-L	LANDING FRAME			
	2	1ma7	HSS 14"x4"x3/8"	4	9 1/2	
	2	1mb7	HSS 14"x4"x3/16"	12	3 3/4	
	2	1mc7	HSS 14"x4"x3/8"	2	9 3/4	
	2	1md7	HSS 14"x4"x3/16"	3	8 1/2	
	2	1mf7	HSS 10"x4"x3/8"	11	11 3/4	
	4	1mg7	HSS 6"x4"x3/8"	3	4 1/2	
	6	1mh7	C6 x 8.2	3	4 1/2	
	2	1aa7	L 1 1/2"x1 1/2"x3/16"	0	9 3/8	
	4	1ab7	L 2"x2"x1/4"	2	11 1/2	
	16	1ac7	L 2"x2"x1/4"	1	8	
	8	1ad7	L 2"x2"x1/4"	1	3	
	2	1pa7	PLATE 1/4"x3 1/4"	1	1 1/4	

MATERIAL GENERAL NOTES:

1) ALL MATERIAL TO BE A36 UNLESS NOTED.
2) ALL W-SHAPES TO BE GRADE A992 Gr 50 (Fy=50) UNLESS NOTED.
3) ALL ROUND HSS TUBES TO BE A500 Gr B (Fy=42) UNLESS NOTED
4) ALL RECTANGULAR OR SQUARE TUBES TO BE A500 Gr B (Fy=46) UNLESS NOTED
5) ALL STD. PIPES TO BE A53, TYPE E, Gr B (Fy=35) UNLESS NOTED

REVISION LOG		
REV	DATE	DESCRIPTION

PRINT DISTRIBUTION				
DATE	APP.	DIST.	SHOP	ERECTION

FINISH: CLEAN SSPC-SP6
1 S/C UNIVERSAL PRIMER
SHOP CONNECTIONS:
HOLES: UNLESS NOTED

STRUCTURE: BROCK SCHOOL OF BUSINESS - SAMFORD UNIV.
LOCATION: HOMEWOOD, AL
CUSTOMER: HOAR CONSTRUCTION
ARCHITECT: DAVIS ARCHITECTS
DETAIL: STAIR A

DRAWN: RB DATE: 7/14
CHECKED: JG DATE: 7/14
REF.DWGS. E1-1 THRU E1-4

ITEM NO. 1
JOB NO. 5172
DWG.NO. 1-7

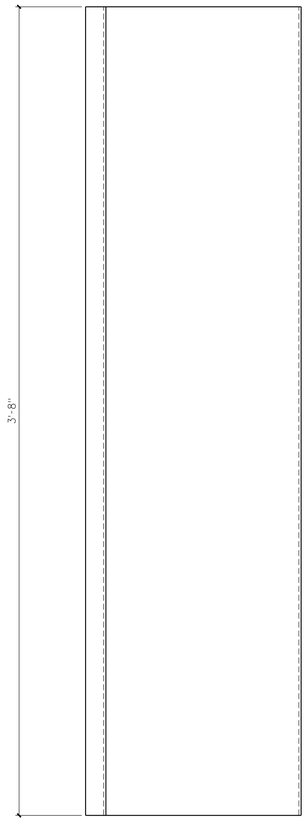

52 ~ TREAD PLATES MK. 1pa1

PLATE #12 GA. x 22 13/16" x 3'-8"

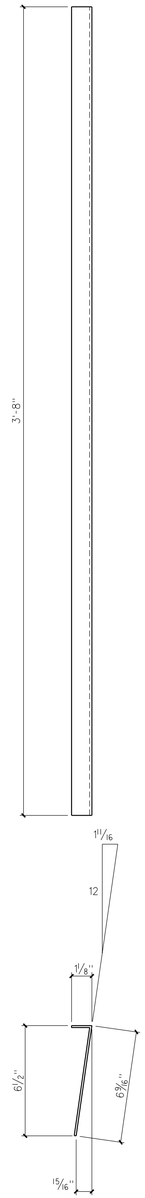

2 ~ TREAD PLATES MK. 1pb1

PLATE #12 GA. x 7 7/16" x 3'-8"

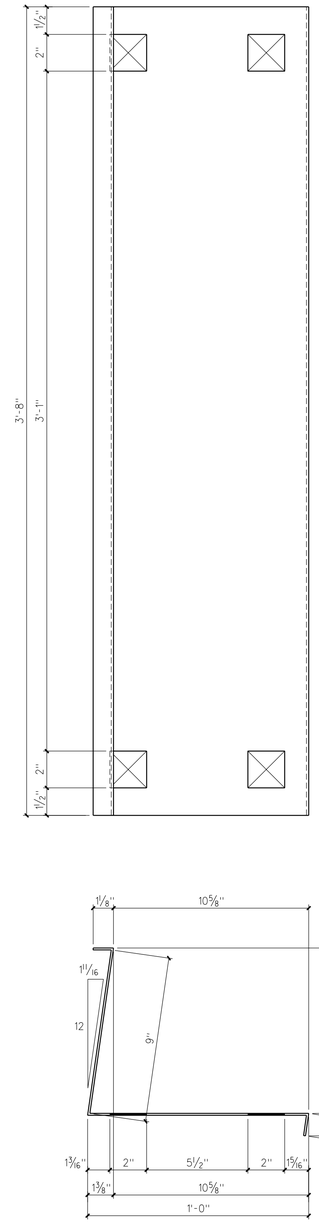

2 ~ TREAD PLATES MK. 1pd1

PLATE #12 GA. x 22 13/16" x 3'-8"

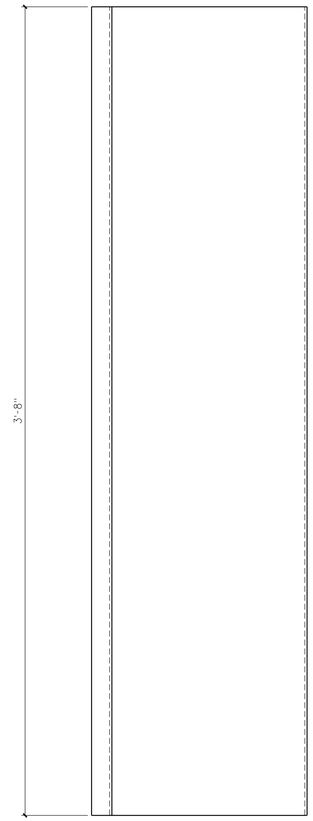

2 ~ TREAD PLATES MK. 1pa2

PLATE #12 GA. x 21" x 3'-8"

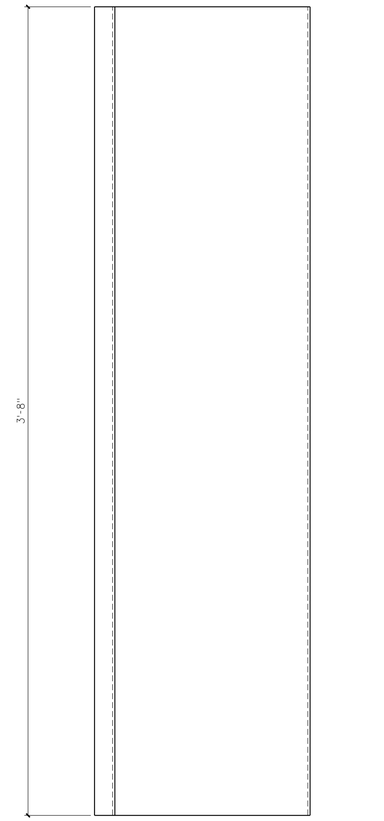

2 ~ TREAD PLATES MK. 1pa4

PLATE #12 GA. x 21 5/8" x 3'-8"

REVISION LOG		
REV	DATE	DESCRIPTION

PRINT DISTRIBUTION				
DATE	APP.	DIST.	SHOP	ERECTION

FINISH: CLEAN SSPC-SP6

1 S/C UNIVERSAL PRIMER

SHOP CONNECTIONS:

HOLES: UNLESS NOTED

STRUCTURE BROCK SCHOOL OF BUSINESS - SAMFORD UNIV.

LOCATION HOMEWOOD, AL

CUSTOMER HOAR CONSTRUCTION

ARCHITECT DAVIS ARCHITECTS

DETAIL STAIR A

DRAWN: RB DATE: 7/14

CHECKED: JG DATE: 7/14

REF.DWGS. E1-1 THRU E1-4

ITEM NO. 1

JOB NO. 5172

DWG.NO. 1-11

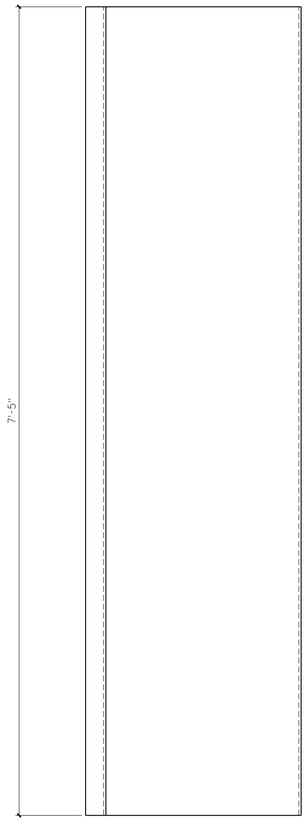

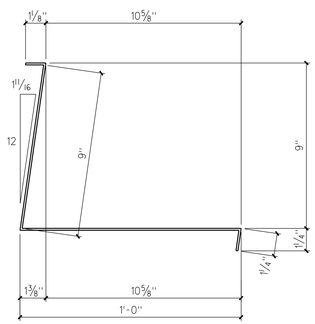

ONE ~ TREAD PLATE MK. 1pa6

PLATE •12 GA. x 22 13/16" x 7'-5"

ONE ~ TREAD PLATES MK. 1-12M1

PLATE •12 GA. x 22 13/16" x 7'-5"

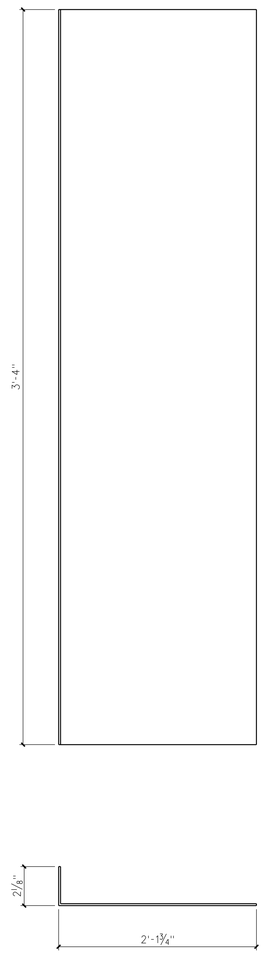

2 ~ PLATES MK. 1-12M5

PLATE •12 GA. x 27 5/8" x 3'-4"

BILL OF MATERIAL

SHIP QTY	NO PCS	MARK	DESCRIPTION	LENGTH FT	LENGTH INS	REMARKS
ONE		1-12M1	TREAD PLATES			
	ONE		PLATE •12 GA. x 22 13/16"	7	5	
2		1-12M5	LANDING PLATE			
	2		PLATE •12 GA. x 27 5/8"	3	4	
			(PLAIN MATERIAL)			
			LANDING PLATES			
2		1-12M2	PLATE •12 GA. x 21 1/2"	3	4	
4		1-12M3	PLATE •12 GA. x 23"	3	4	
4		1-12M4	PLATE •12 GA. x 18"	3	4	

REVISION LOG		
REV	DATE	DESCRIPTION

PRINT DISTRIBUTION				
DATE	APP.	DIST.	SHOP	ERECTION

FINISH: CLEAN SSPC-SP6

1 S/C UNIVERSAL PRIMER

SHOP CONNECTIONS:

HOLES: UNLESS NOTED

STRUCTURE BROCK SCHOOL OF BUSINESS - SAMFORD UNIV.

LOCATION HOMEWOOD, AL

CUSTOMER HOAR CONSTRUCTION

ARCHITECT DAVIS ARCHITECTS

DETAIL STAIR A

DRAWN: RB DATE: 7/14

CHECKED: JG DATE: 7/14

REF.DWGS. E1-1 THRU E1-4

ITEM NO. 1

JOB NO. 5172

DWG.NO. 1-12

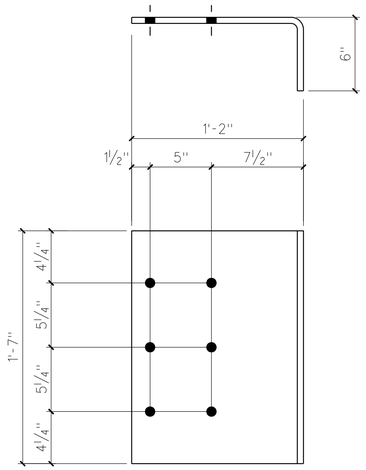

6 ~ BENT PLATE MK. 1-9M1

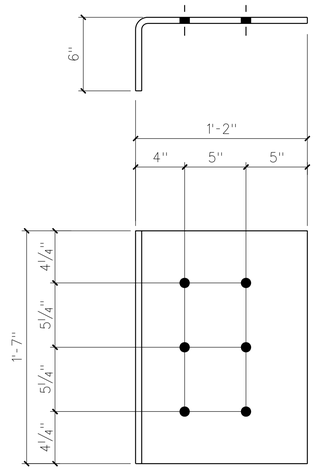

6 ~ BENT PLATE MK. 1-9M2

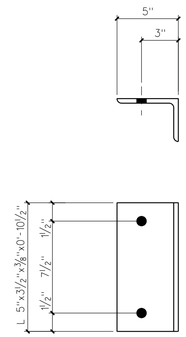

12 ~ ANGLE MK. 1-9A1

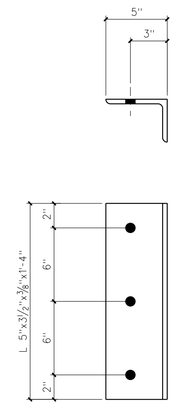

12 ~ ANGLE MK. 1-9A2

BILL OF MATERIAL

SHIP QTY	NO PCS	MARK	DESCRIPTION	LENGTH FT	LENGTH INS	REMARKS
6		1-9M1	BENT PLATE			
	6		PLATE ½"x19"	1	7	
6		1-9M2	BENT PLATE			
	6		PLATE ½"x19"	1	7	
12		1-9A1	ANGLE			
	12		L 5"x3½"x⅜"	0	10½	
12		1-9A2	ANGLE			
	12		L 5"x3½"x⅜"	1	4	

MATERIAL GENERAL NOTES:

1) ALL MATERIAL TO BE A36 UNLESS NOTED.
2) ALL W-SHAPES TO BE GRADE A992 Gr 50 (Fy=50) UNLESS NOTED.
3) ALL ROUND HSS TUBES TO BE A500 Gr B (Fy=42) UNLESS NOTED
4) ALL RECTANGULAR OR SQUARE TUBES TO BE A500 Gr B (Fy=46) UNLESS NOTED
5) ALL STD. PIPES TO BE A53, TYPE E, Gr B (Fy=35) UNLESS NOTED

REVISION LOG		
REV	DATE	DESCRIPTION

PRINT DISTRIBUTION				
DATE	APP.	DIST.	SHOP	ERECTION

FINISH: CLEAN SSPC-SP2
1 S/C UNIVERSAL PRIMER

SHOP CONNECTIONS:
HOLES: 13/16" UNLESS NOTED

STRUCTURE BROCK SCHOOL OF BUSINESS - SAMFORD UNIV.
LOCATION HOMEWOOD, AL
CUSTOMER HOAR CONSTRUCTION
ARCHITECT DAVIS ARCHITECTS
DETAIL STAIR A

DRAWN: RB DATE: 7/14
CHECKED: JG DATE: 7/14
REF.DWGS. E1-1 THRU E1-4

ITEM NO. 1

JOB NO. 5172

DWG.NO. 1-9

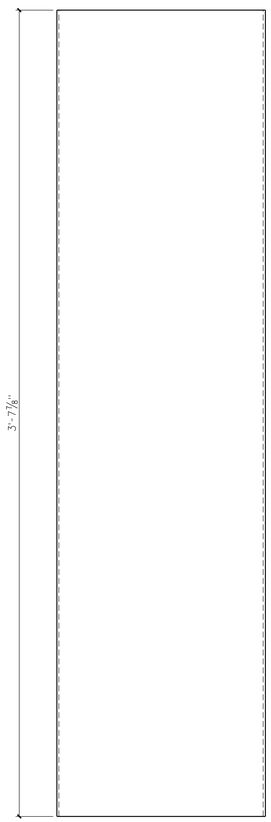

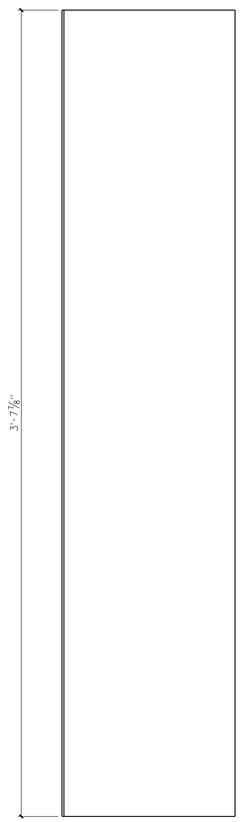

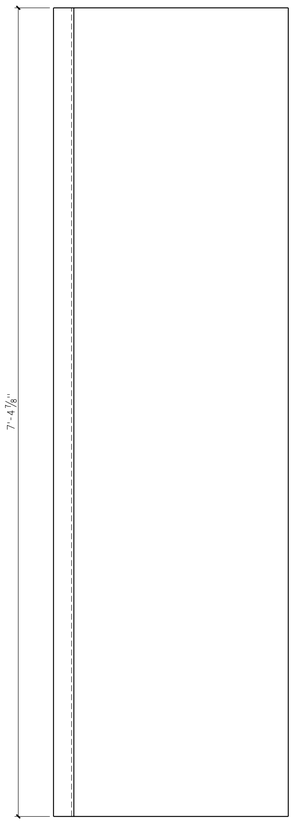

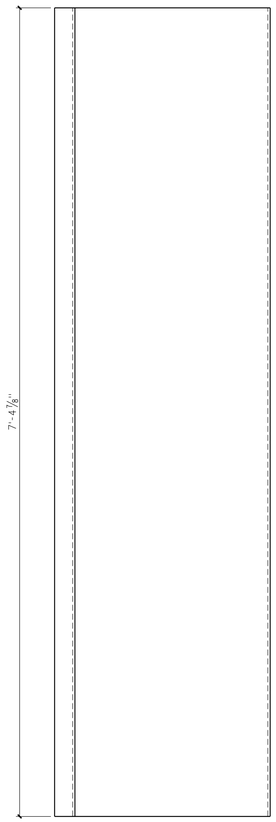

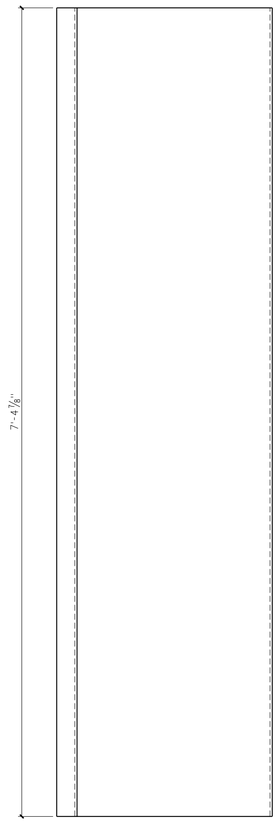

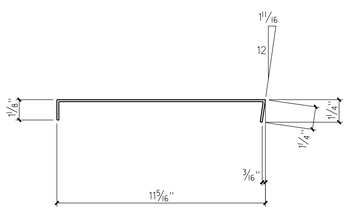

8 ~ TREAD PLATES MK. 1-10M1

PLATE *12 GA. x 13 1/8" x 3'-7 7/8"

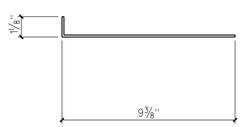

6 ~ TREAD PLATES MK. 1-10M2

PLATE *12 GA. x 10 5/16" x 3'-7 7/8"

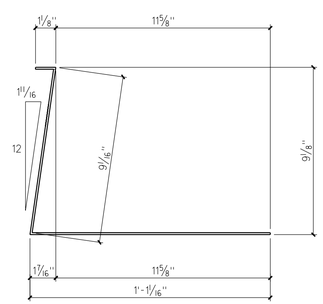

ONE ~ TREAD PLATES MK. 1-10M3

PLATE *12 GA. x 22 7/8" x 7'-4 7/8"

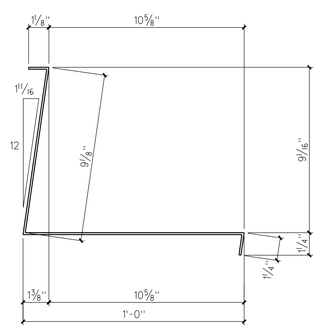

ONE ~ TREAD PLATES MK. 1-10M4

PLATE *12 GA. x 22 15/16" x 7'-4 7/8"

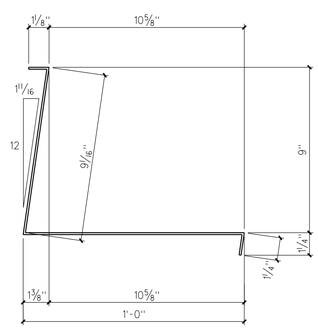

ONE ~ TREAD PLATES MK. 1-10M5

PLATE *12 GA. x 22 7/8" x 7'-4 7/8"

BILL OF MATERIAL

SHIP QTY	NO PCS	MARK	DESCRIPTION	LENGTH FT	LENGTH INS	REMARKS
8		1-10M1	TREAD PLATES			
	8		PLATE *12 GA. x 13 1/8"	3	7 7/8	
6		1-10M2	TREAD PLATES			
	6		PLATE *12 GA. x 10 5/16"	3	7 7/8	
ONE		1-10M3	TREAD PLATES			
	ONE		PLATE *12 GA. x 22 7/8"	7	4 7/8	
ONE		1-10M4	TREAD PLATES			
	ONE		PLATE *12 GA. x 22 15/16"	7	4 7/8	
ONE		1-10M5	TREAD PLATES			
	ONE		PLATE *12 GA. x 22 7/8"	7	4 7/8	

MATERIAL GENERAL NOTES:

1) ALL MATERIAL TO BE A36 UNLESS NOTED.
2) ALL W-SHAPES TO BE GRADE A992 Gr 50 (Fy=50) UNLESS NOTED.
3) ALL ROUND HSS TUBES TO BE A500 Gr B (Fy=42) UNLESS NOTED.
4) ALL RECTANGULAR OR SQUARE TUBES TO BE A500 Gr B (Fy=46) UNLESS NOTED
5) ALL STD. PIPES TO BE A53, TYPE E, Gr B (Fy=35) UNLESS NOTED

REVISION LOG		
REV	DATE	DESCRIPTION

PRINT DISTRIBUTION				
DATE	APP.	DIST.	SHOP	ERECTION

FINISH: CLEAN SSPC-SP2
1 S/C UNIVERSAL PRIMER
SHOP CONNECTIONS:
HOLES: UNLESS NOTED

STRUCTURE: BROCK SCHOOL OF BUSINESS - SAMFORD UNIV.
LOCATION: HOMEWOOD, AL
CUSTOMER: HOAR CONSTRUCTION
ARCHITECT: DAVIS ARCHITECTS
DETAIL: STAIR A

DRAWN: RB DATE: 7/14
CHECKED: JG DATE: 7/14
REF.DWGS. E1-1 THRU E1-4

ITEM NO. 1
JOB NO. 5172
DWG.NO. 1-10

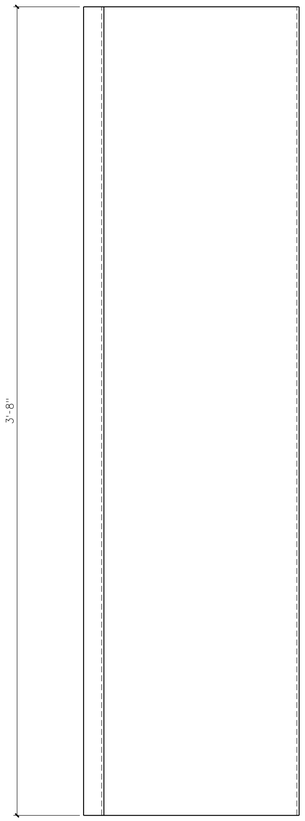

132 ~ TREAD PLATES MK. 1pa1

PLATE *12 GA. x 22 13/16" x 3'-8"

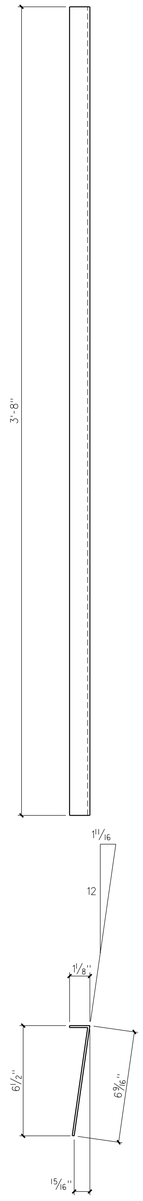

2 ~ TREAD PLATES MK. 1pb1

PLATE *12 GA. x 7 7/16" x 3'-8"

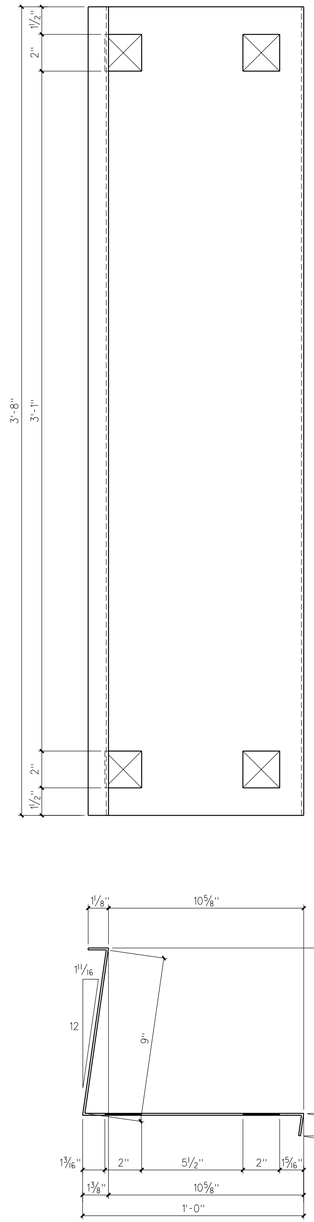

2 ~ TREAD PLATES MK. 1pd1

PLATE *12 GA. x 22 13/16" x 3'-8"

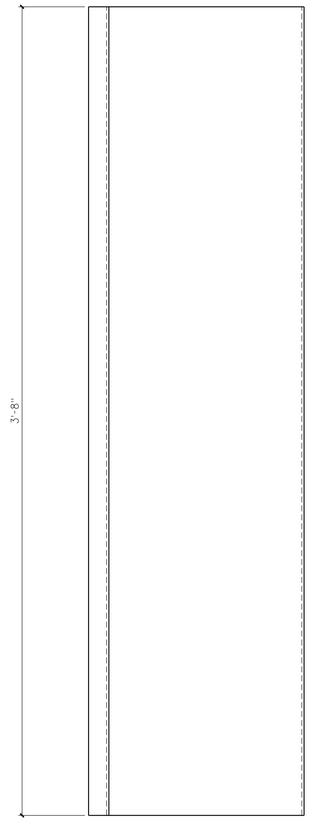

6 ~ TREAD PLATES MK. 1pa2

PLATE *12 GA. x 21" x 3'-8"

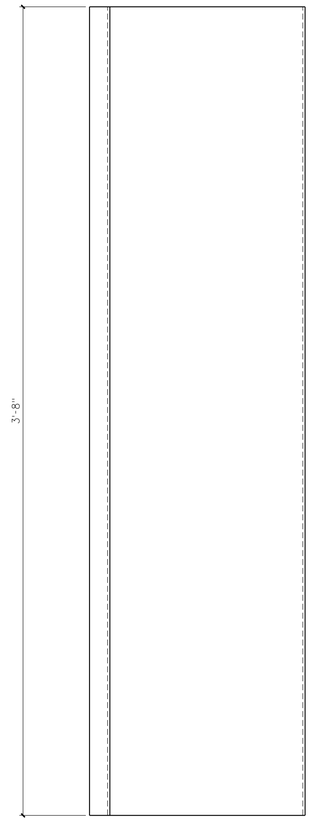

6 ~ TREAD PLATES MK. 1pa4

PLATE *12 GA. x 21 5/8" x 3'-8"

REVISION LOG		
REV	DATE	DESCRIPTION
1	11/19/14	REVISED QUANTITIES NOTED

PRINT DISTRIBUTION				
DATE	APP.	DIST.	SHOP	ERECTION

FINISH: CLEAN SSPC-SP6
1 S/C UNIVERSAL PRIMER

SHOP CONNECTIONS:
HOLES: UNLESS NOTED

STRUCTURE BROCK SCHOOL OF BUSINESS - SAMFORD UNIV.
LOCATION HOMEWOOD, AL
CUSTOMER HOAR CONSTRUCTION
ARCHITECT DAVIS ARCHITECTS
DETAIL STAIR A

DRAWN: RB DATE: 7/14
CHECKED: JG DATE: 7/14
REF.DWGS. E1-1 THRU E1-4

ITEM NO. 1
JOB NO. 5172
DWG.NO. 1-11

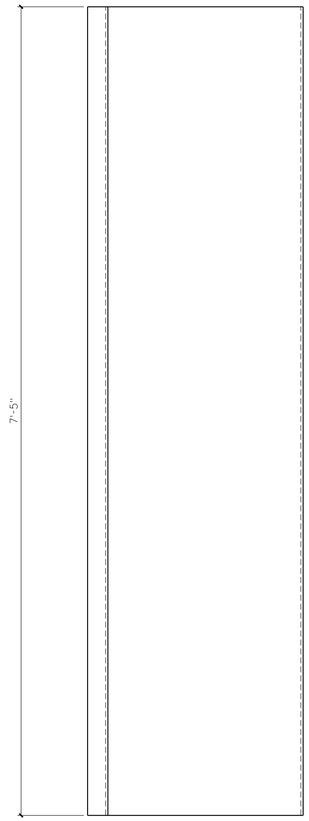

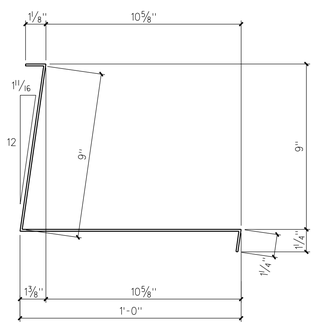

ONE ~ TREAD PLATE MK. 1pa6

PLATE •12 GA. x 22 13/16" x 7'-5"

ONE ~ TREAD PLATES MK. 1-12M1

PLATE •12 GA. x 22 13/16" x 7'-5"

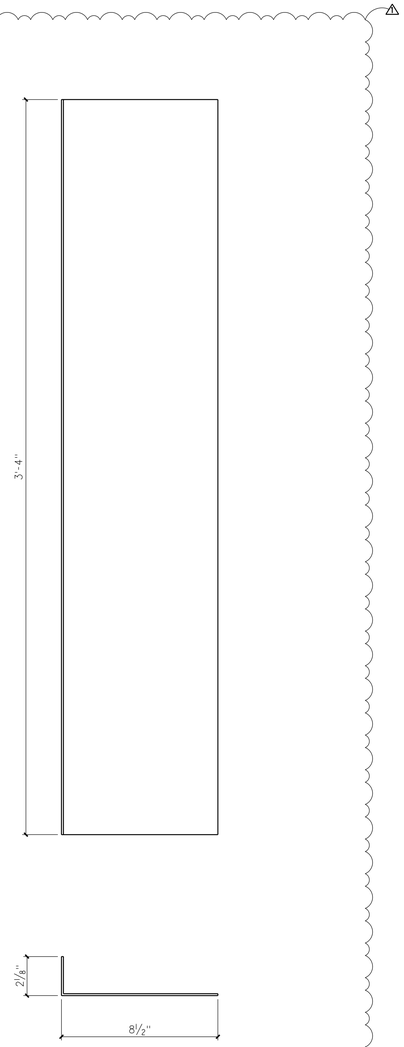

6 ~ PLATES MK. 1-12M5

PLATE •12 GA. x 10 3/8" x 3'-4"

BILL OF MATERIAL

SHIP QTY	NO PCS	MARK	DESCRIPTION	LENGTH FT	LENGTH INS	REMARKS
ONE		1-12M1	TREAD PLATES			
	ONE		PLATE •12 GA. x 22 13/16"	7	5	
6		1-12M5	LANDING PLATE			
	6		PLATE •12 GA. x 10 3/8"	3	4	
			(PLAIN MATERIAL)			
			LANDING PLATES			
10		1-12M2	PLATE •12 GA. x 21 1/2"	3	4	
22		1-12M3	PLATE •12 GA. x 23"	3	4	
16		1-12M4	PLATE •12 GA. x 18"	3	4	

REVISION LOG		
REV	DATE	DESCRIPTION
1	11/19/14	REVISED AS NOTED

PRINT DISTRIBUTION				
DATE	APP.	DIST.	SHOP	ERECTION

FINISH: CLEAN SSPC-SP6

1 S/C UNIVERSAL PRIMER

SHOP CONNECTIONS:

HOLES: UNLESS NOTED

STRUCTURE BROCK SCHOOL OF BUSINESS - SAMFORD UNIV.

LOCATION HOMEWOOD, AL

CUSTOMER HOAR CONSTRUCTION

ARCHITECT DAVIS ARCHITECTS

DETAIL STAIR A

DRAWN: RB DATE: 7/14

CHECKED: JG DATE: 7/14

REF.DWGS. E1-1 THRU E1-4

ITEM NO. 1

JOB NO. 5172

DWG.NO. 1-12

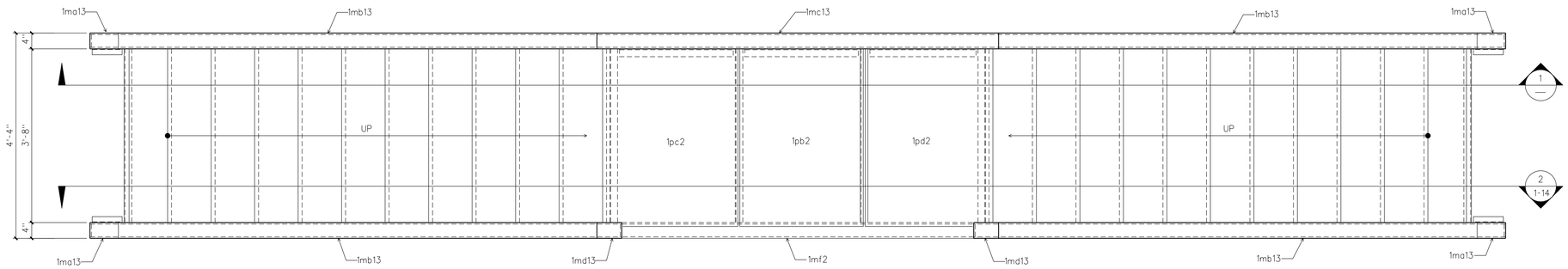

ONE ~ STAIR MK. 1-13S1

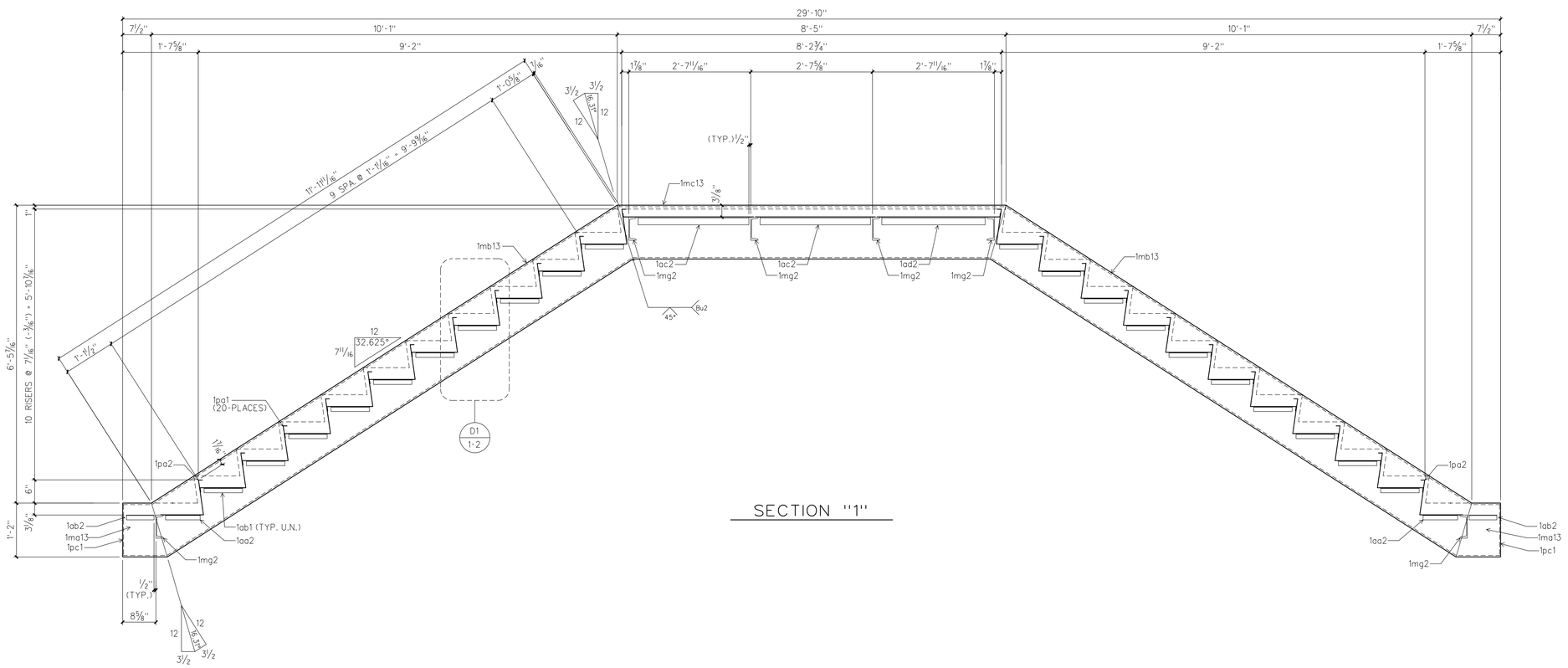

SECTION "1"

BILL OF MATERIAL

SHIP QTY	NO PCS	MARK	DESCRIPTION	LENGTH FT	LENGTH INS	REMARKS
ONE		1-13S1	STAIR			
	4	1ma13	HSS 14"x4"x3/8"	0	11⅝	
	4	1mb13	HSS 14"x4"x3/8"	12	3 13/16	
	ONE	1mc13	HSS 14"x4"x3/8"	8	5	
	2	1md13	HSS 14"x4"x3/8"	0	6	
	ONE	1mf2	HSS 6"x4"x3/8"	7	5	
	6	1mg2	C6 x 8.2	3	8	
	2	1pa2	PLATE #12 GA. x 21"	3	8	DETAIL SHT. 1-11
	20	1pa1	PLATE #12 GA. x 22 13/16"	3	8	DETAIL SHT. 1-11
	6	1pc1	PLATE ¼" x 3¼"	1	1¼	
	40	1ab1	L 1½"x1½"x3/16"	0	10	
	4	1aa2	L 1½"x1½"x3/16"	0	9	
	4	1ab2	L 1½"x1½"x3/16"	0	7½	
	2	1ac2	L 2"x2"x¼"	2	4¾	
	ONE	1ad2	L 2"x2"x¼"	2	2⅞	
	ONE	1pb2	PLATE #12 GA. x 31 3/16"	3	9	
	ONE	1pc2	PLATE #12 GA. x 34 13/16"	3	9	SEE DETAIL SHT. 1-2
	ONE	1pd2	PLATE #12 GA. x 32⅞"	3	9	SEE DETAIL SHT. 1-2

MATERIAL GENERAL NOTES:

1) ALL MATERIAL TO BE A36 UNLESS NOTED.
2) ALL W-SHAPES TO BE GRADE A992 Gr 50 (Fy=50) UNLESS NOTED.
3) ALL ROUND HSS TUBES TO BE A500 Gr B (Fy=42) UNLESS NOTED
4) ALL RECTANGULAR OR SQUARE TUBES TO BE A500 Gr B (Fy=46) UNLESS NOTED
5) ALL STD. PIPES TO BE A53, TYPE E, Gr B (Fy=35) UNLESS NOTED

REVISION LOG		
REV	DATE	DESCRIPTION

PRINT DISTRIBUTION				
DATE	APP.	DIST.	SHOP	ERECTION

FINISH: CLEAN SSPC-SP6
1 S/C UNIVERSAL PRIMER
SHOP CONNECTIONS:
HOLES: UNLESS NOTED

STRUCTURE BROCK SCHOOL OF BUSINESS - SAMFORD UNIV.
LOCATION HOMEWOOD, AL
CUSTOMER HOAR CONSTRUCTION
ARCHITECT DAVIS ARCHITECTS
DETAIL STAIR A

DRAWN: RB DATE: 7/14
CHECKED: JG DATE: 7/14
REF.DWGS. E1-1 THRU E1-4

ITEM NO. 1
JOB NO. 5172
DWG.NO. 1-13

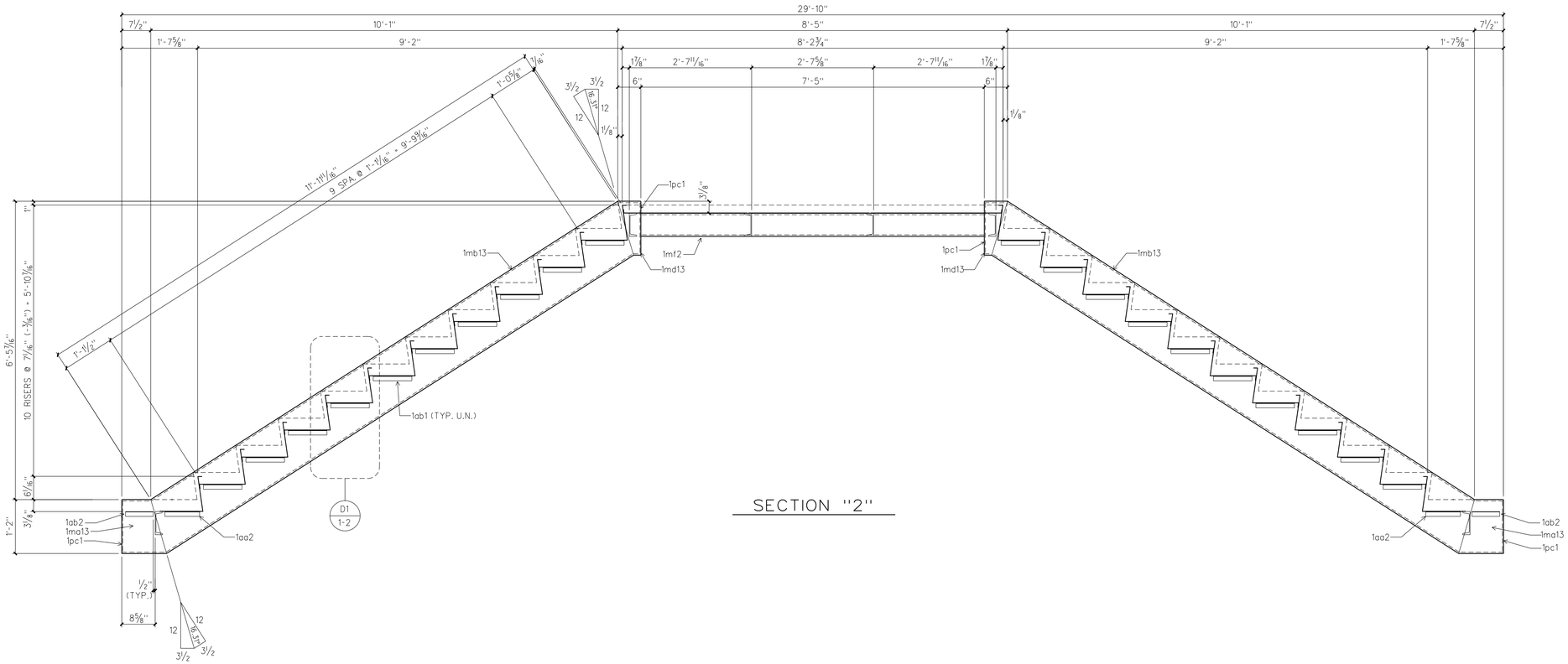

SECTION "2"

BILL OF MATERIAL

SHIP QTY	NO PCS	MARK	DESCRIPTION	LENGTH FT	LENGTH INS	REMARKS

MATERIAL GENERAL NOTES:

1) ALL MATERIAL TO BE A36 UNLESS NOTED.
2) ALL W-SHAPES TO BE GRADE A992 Gr 50 (Fy=50) UNLESS NOTED.
3) ALL ROUND HSS TUBES TO BE A500 Gr B (Fy=42) UNLESS NOTED
4) ALL RECTANGULAR OR SQUARE TUBES TO BE A500 Gr B (Fy=46) UNLESS NOTED
5) ALL STD. PIPES TO BE A53, TYPE E, Gr B (Fy=35) UNLESS NOTED

REVISION LOG		
REV	DATE	DESCRIPTION

PRINT DISTRIBUTION				
DATE	APP.	DIST.	SHOP	ERECTION

FINISH: CLEAN SSPC-SP6
1 S/C UNIVERSAL PRIMER
SHOP CONNECTIONS:
HOLES: UNLESS NOTED

STRUCTURE BROCK SCHOOL OF BUSINESS - SAMFORD UNIV.
LOCATION HOMEWOOD, AL
CUSTOMER HOAR CONSTRUCTION
ARCHITECT DAVIS ARCHITECTS
DETAIL STAIR A

DRAWN: RB DATE: 7/14
CHECKED: JG DATE: 7/14
REF.DWGS. E1-1 THRU E1-4

ITEM NO. 1
JOB NO. 5172
DWG.NO. 1-14

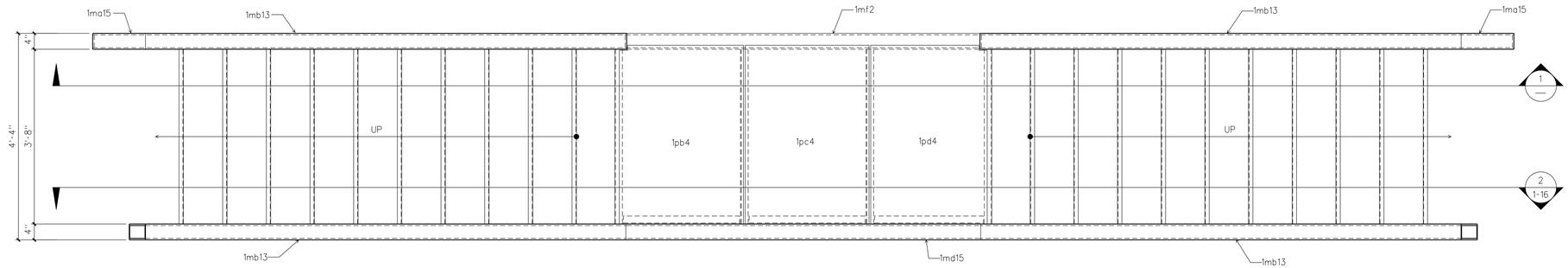

ONE ~ STAIR MK. 1-15S1

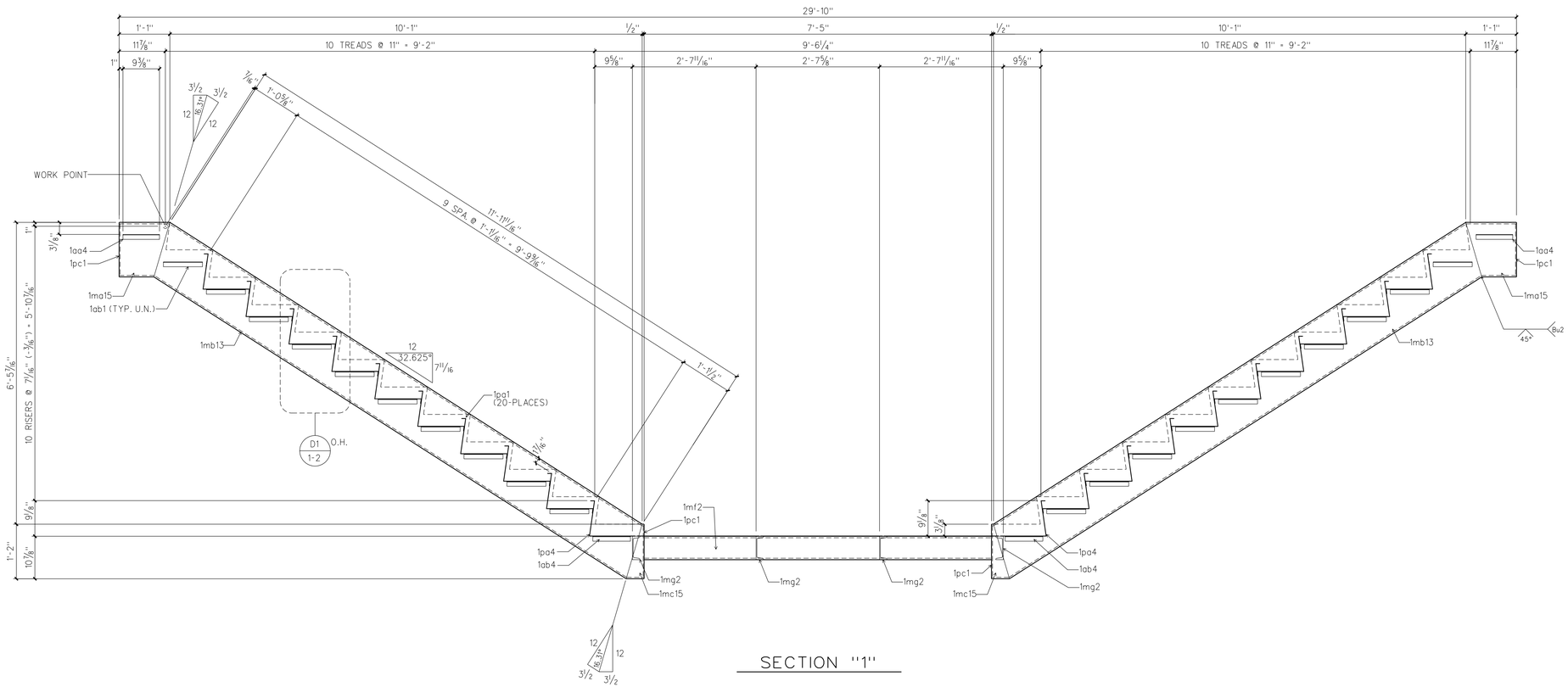

SECTION "1"

BILL OF MATERIAL

SHIP QTY	NO PCS	MARK	DESCRIPTION	LENGTH FT	LENGTH INS	REMARKS
ONE		1-15S1	STAIRS			
	2	1ma15	HSS 14"x4"x3/8"	1	1	
	4	1mb13	HSS 14"x4"x3/8"	12	3 13/16	
	2	1mc15	HSS 14"x4"x3/8"	0	4 5/8	
	ONE	1md15	HSS 14"x4"x3/8"	8	2 1/4	
	ONE	1mf2	HSS 6"x4"x3/8"	7	5	
	4	1mg2	C6 x 8.2	3	8	
	2	1pa4	PLATE *12 GA. x 21 5/8"	3	8	DETAIL SHT. 1-11
	20	1pa1	PLATE *12 GA. x 22 13/16"	3	8	DETAIL SHT. 1-11
	4	1pc1	PLATE 1/4" x 3 1/4"	1	1 1/4	
	40	1ab1	L 1 1/2"x1 1/2"x3/16"	0	10	
	2	1aa4	L 1 1/2"x1 1/2"x3/16"	0	9 3/8	
	4	1ab4	L 1 1/2"x1 1/2"x3/16"	0	9 5/8	
	2	1ac2	L 2"x2"x1/4"	2	4 3/4	
	ONE	1ad2	L 2"x2"x1/4"	2	2 7/8	
	ONE	1pb4	PLATE *12 GA. x 31 1/4"	3	9	SEE DETAIL SHT. 1-4
	ONE	1pc4	PLATE *12 GA. x 31 13/16"	3	9	
	ONE	1pd4	PLATE *12 GA. x 29 3/8"	3	9	SEE DETAIL SHT. 1-4

MATERIAL GENERAL NOTES:

1) ALL MATERIAL TO BE A36 UNLESS NOTED.
2) ALL W-SHAPES TO BE GRADE A992 Gr 50 (Fy=50) UNLESS NOTED.
3) ALL ROUND HSS TUBES TO BE A500 Gr B (Fy=42) UNLESS NOTED.
4) ALL RECTANGULAR OR SQUARE TUBES TO BE A500 Gr B (Fy=46) UNLESS NOTED
5) ALL STD. PIPES TO BE A53, TYPE E, Gr B (Fy=35) UNLESS NOTED

REVISION LOG		
REV	DATE	DESCRIPTION

PRINT DISTRIBUTION				
DATE	APP.	DIST.	SHOP	ERECTION

FINISH: CLEAN SSPC-SP6
1 S/C UNIVERSAL PRIMER
SHOP CONNECTIONS:
HOLES: UNLESS NOTED

STRUCTURE: BROCK SCHOOL OF BUSINESS - SAMFORD UNIV.
LOCATION: HOMEWOOD, AL
CUSTOMER: HOAR CONSTRUCTION
ARCHITECT: DAVIS ARCHITECTS
DETAIL: STAIR A

DRAWN: RB DATE: 7/14
CHECKED: JG DATE: 7/14
REF.DWGS. E1-1 THRU E1-4

ITEM NO. 1
JOB NO. 5172
DWG.NO. 1-15

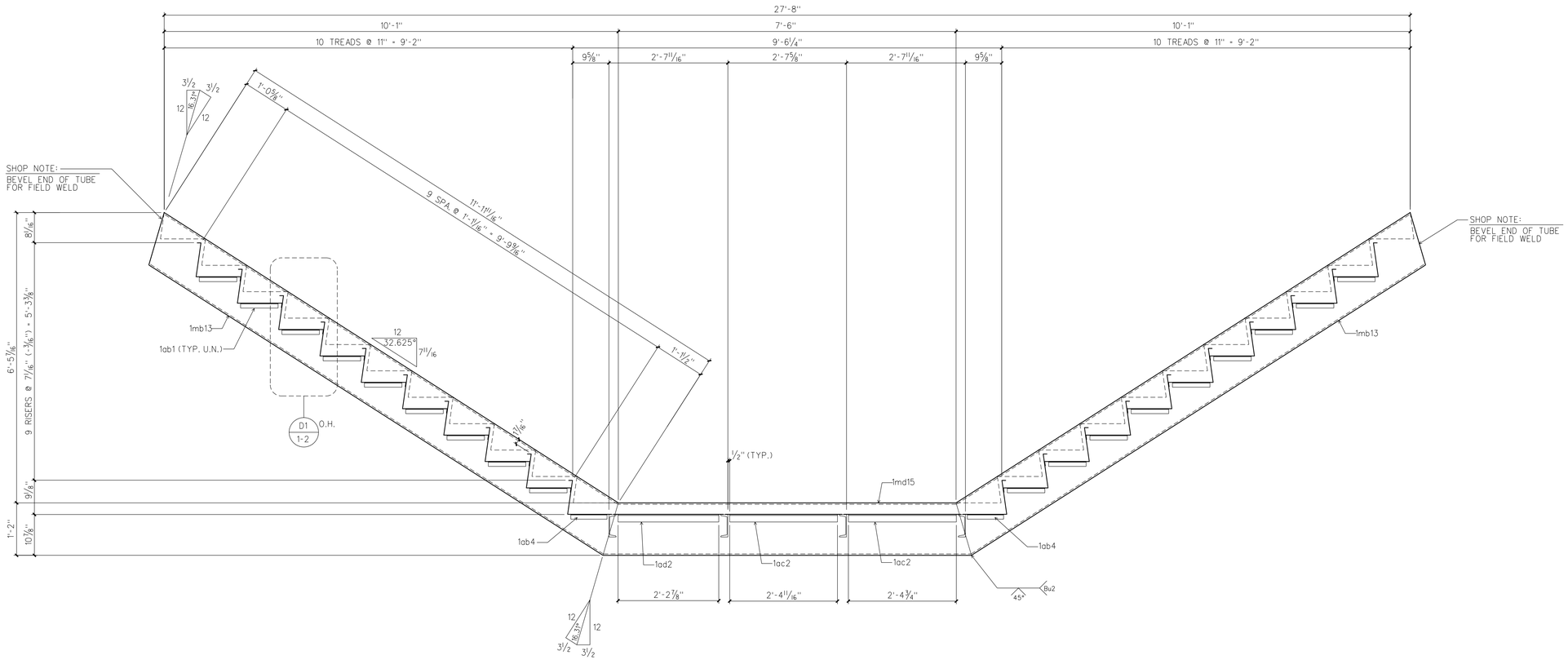

SECTION "2"

BILL OF MATERIAL

SHIP QTY	NO PCS	MARK	DESCRIPTION	LENGTH FT	LENGTH INS	REMARKS

MATERIAL GENERAL NOTES:

1) ALL MATERIAL TO BE A36 UNLESS NOTED.
2) ALL W-SHAPES TO BE GRADE A992 Gr 50 (Fy=50) UNLESS NOTED.
3) ALL ROUND HSS TUBES TO BE A500 Gr B (Fy=42) UNLESS NOTED.
4) ALL RECTANGULAR OR SQUARE TUBES TO BE A500 Gr B (Fy=46) UNLESS NOTED
5) ALL STD. PIPES TO BE A53, TYPE E, Gr B (Fy=35) UNLESS NOTED

REVISION LOG		
REV	DATE	DESCRIPTION

PRINT DISTRIBUTION				
DATE	APP.	DIST.	SHOP	ERECTION

FINISH: CLEAN SSPC-SP6
1 S/C UNIVERSAL PRIMER
SHOP CONNECTIONS:
HOLES: UNLESS NOTED

STRUCTURE: BROCK SCHOOL OF BUSINESS - SAMFORD UNIV.
LOCATION: HOMEWOOD, AL
CUSTOMER: HOAR CONSTRUCTION
ARCHITECT: DAVIS ARCHITECTS
DETAIL: STAIR A

DRAWN: RB DATE: 7/14
CHECKED: JG DATE: 7/14
REF.DWGS. E1-1 THRU E1-4

ITEM NO. 1
JOB NO. 5172
DWG.NO. 1-16

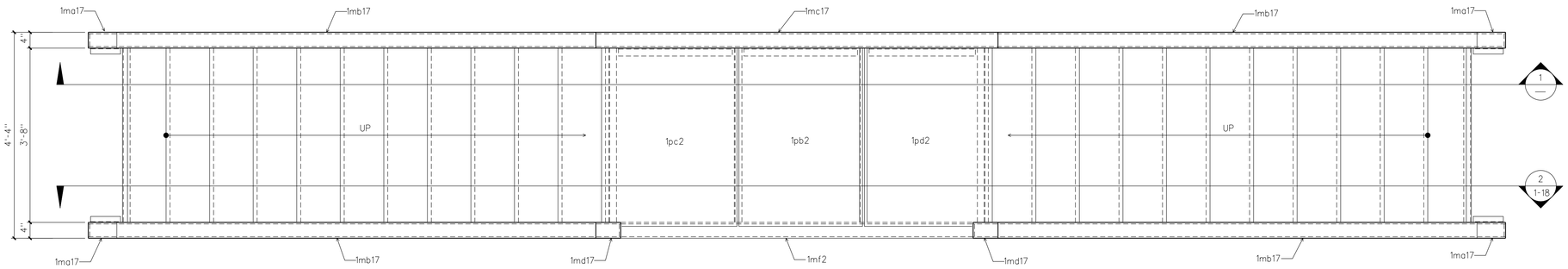

ONE ~ STAIR MK. 1-17S1

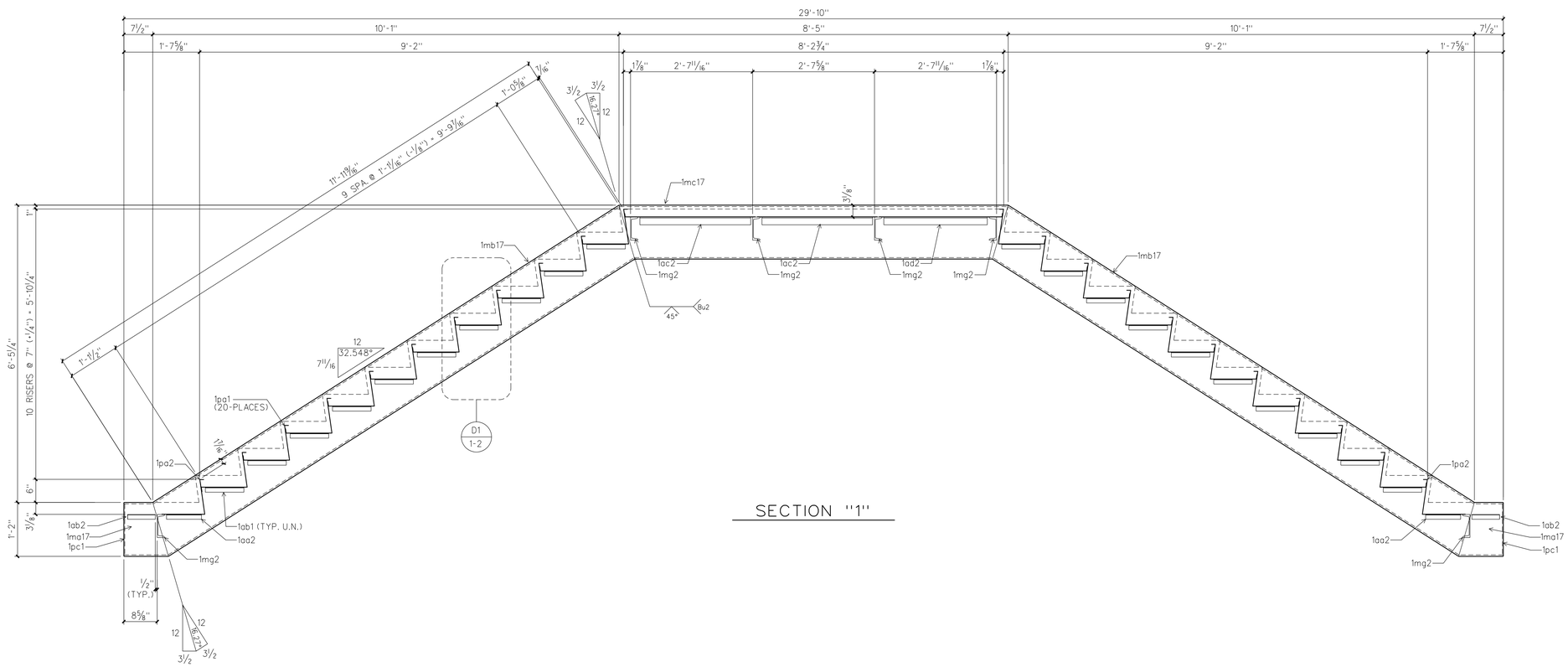

SECTION "1"

BILL OF MATERIAL

SHIP QTY	NO PCS	MARK	DESCRIPTION	LENGTH FT	LENGTH INS	REMARKS
ONE		1-17S1	STAIR			
	4	1ma17	HSS 14"x4"x3/8"	0	11 9/16	
	4	1mb17	HSS 14"x4"x3/8"	12	3⅝	
	ONE	1mc17	HSS 14"x4"x3/8"	8	5	
	2	1md17	HSS 14"x4"x3/8"	0	6	
	ONE	1mf2	HSS 6"x4"x3/8"	7	5	
	6	1mg2	C6 x 8.2	3	8	
	2	1pa2	PLATE *12 GA. x 21"	3	8	DETAIL SHT. 1-11
	20	1pa1	PLATE *12 GA. x 22 13/16"	3	8	DETAIL SHT. 1-11
	6	1pc1	PLATE ¼" x 3¼"	1	1¼	
	40	1ab1	L 1½"x1½"x3/16"	0	10	
	4	1aa2	L 1½"x1½"x3/16"	0	9	
	4	1ab2	L 1½"x1½"x3/16"	0	7½	
	2	1ac2	L 2"x2"x¼"	2	4¾	
	ONE	1ad2	L 2"x2"x¼"	2	2⅞	
	ONE	1pb2	PLATE *12 GA. x 31 3/16"	3	9	
	ONE	1pc2	PLATE *12 GA. x 34 13/16"	3	9	SEE DETAIL SHT. 1-2
	ONE	1pd2	PLATE *12 GA. x 32⅞"	3	9	SEE DETAIL SHT. 1-2

MATERIAL GENERAL NOTES:

1) ALL MATERIAL TO BE A36 UNLESS NOTED.
2) ALL W-SHAPES TO BE GRADE A992 Gr 50 (Fy=50) UNLESS NOTED.
3) ALL ROUND HSS TUBES TO BE A500 Gr B (Fy=42) UNLESS NOTED
4) ALL RECTANGULAR OR SQUARE TUBES TO BE A500 Gr B (Fy=46) UNLESS NOTED
5) ALL STD. PIPES TO BE A53, TYPE E, Gr B (Fy=35) UNLESS NOTED

REVISION LOG		
REV	DATE	DESCRIPTION

PRINT DISTRIBUTION				
DATE	APP.	DIST.	SHOP	ERECTION

FINISH: CLEAN SSPC-SP6
1 S/C UNIVERSAL PRIMER
SHOP CONNECTIONS:
HOLES: UNLESS NOTED

STRUCTURE: BROCK SCHOOL OF BUSINESS - SAMFORD UNIV.
LOCATION: HOMEWOOD, AL
CUSTOMER: HOAR CONSTRUCTION
ARCHITECT: DAVIS ARCHITECTS
DETAIL: STAIR A

DRAWN: RB DATE: 7/14
CHECKED: JG DATE: 7/14
REF.DWGS. E1-1 THRU E1-4

ITEM NO. 1
JOB NO. 5172
DWG.NO. 1-17

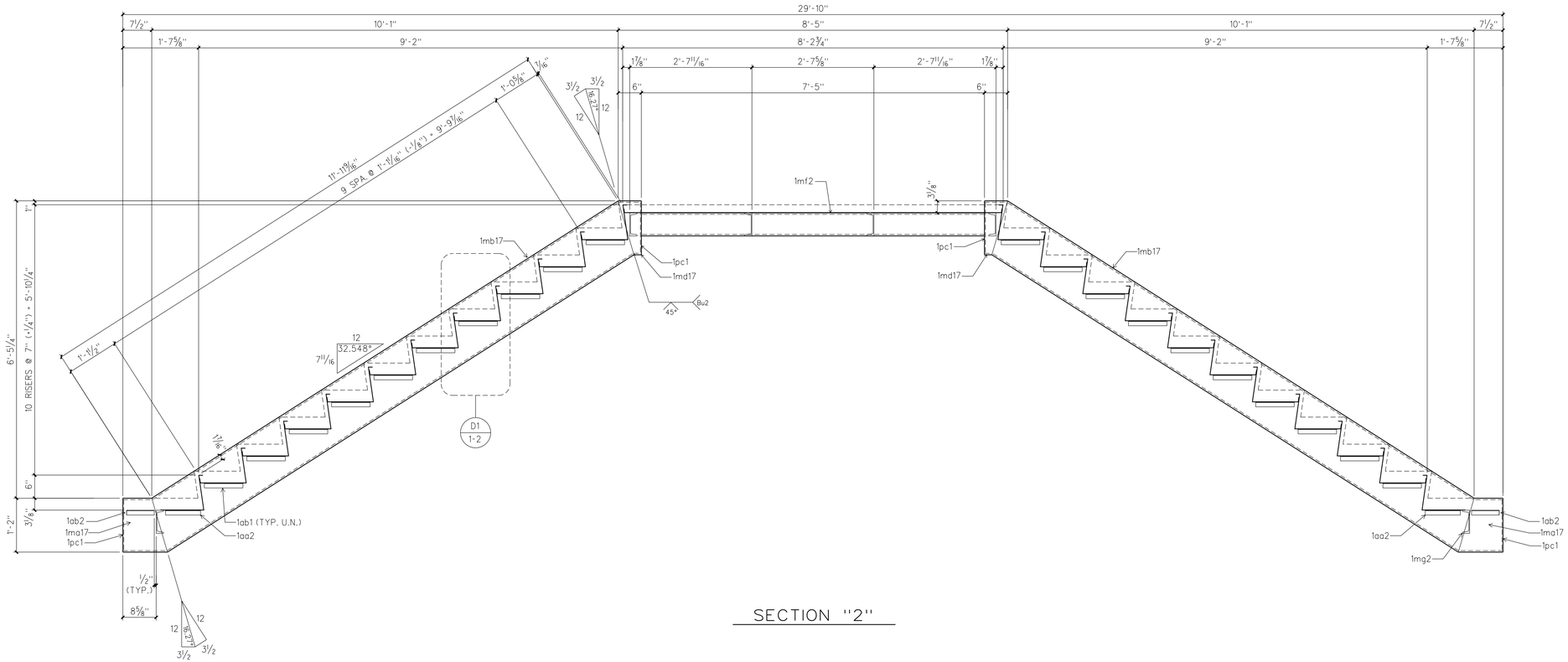

SECTION "2"

BILL OF MATERIAL

SHIP QTY	NO PCS	MARK	DESCRIPTION	LENGTH FT	LENGTH INS	REMARKS

MATERIAL GENERAL NOTES:

1) ALL MATERIAL TO BE A36 UNLESS NOTED.
2) ALL W-SHAPES TO BE GRADE A992 Gr 50 (Fy=50) UNLESS NOTED.
3) ALL ROUND HSS TUBES TO BE A500 Gr B (Fy=42) UNLESS NOTED
4) ALL RECTANGULAR OR SQUARE TUBES TO BE A500 Gr B (Fy=46) UNLESS NOTED
5) ALL STD. PIPES TO BE A53, TYPE E, Gr B (Fy=35) UNLESS NOTED

REVISION LOG		
REV	DATE	DESCRIPTION

PRINT DISTRIBUTION				
DATE	APP.	DIST.	SHOP	ERECTION

FINISH: CLEAN SSPC-SP6
1 S/C UNIVERSAL PRIMER
SHOP CONNECTIONS:
HOLES: UNLESS NOTED

STRUCTURE BROCK SCHOOL OF BUSINESS - SAMFORD UNIV.
LOCATION HOMEWOOD, AL
CUSTOMER HOAR CONSTRUCTION
ARCHITECT DAVIS ARCHITECTS
DETAIL STAIR A

DRAWN: RB DATE: 7/14
CHECKED: JG DATE: 7/14
REF.DWGS. E1-1 THRU E1-4

ITEM NO. 1
JOB NO. 5172
DWG.NO. 1-18

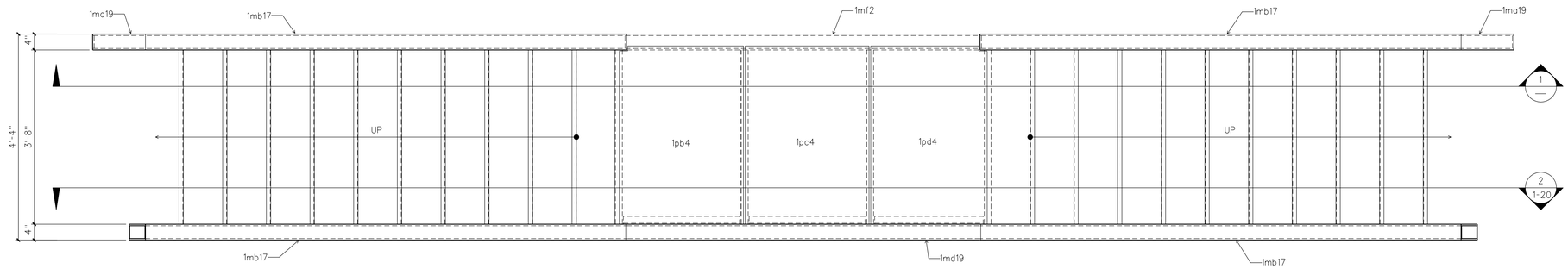

ONE ~ STAIR MK. 1-19S1

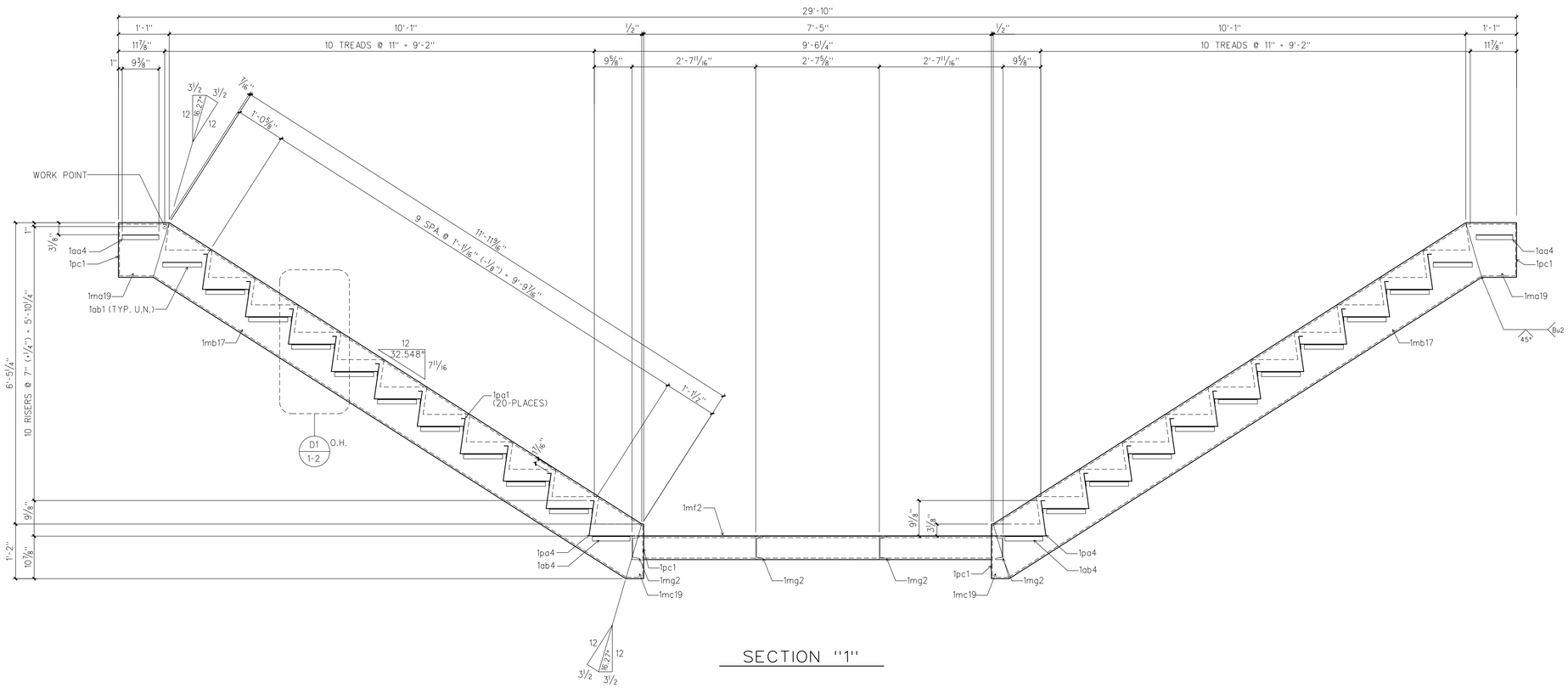

SECTION "1"

BILL OF MATERIAL

SHIP QTY	NO PCS	MARK	DESCRIPTION	LENGTH FT	LENGTH INS	REMARKS
ONE		1-19S1	STAIRS			
	2	1ma19	HSS 14"x4"x3/8"	1	1	
	4	1mb17	HSS 14"x4"x3/8"	12	3 5/8	
	2	1mc19	HSS 14"x4"x3/8"	0	4 9/16	
	ONE	1md19	HSS 14"x4"x3/8"	8	2 1/8	
	ONE	1mf2	HSS 6"x4"x3/8"	7	5	
	4	1mg2	C6 x 8.2	3	8	
	2	1pa4	PLATE *12 GA. x 21 5/8"	3	8	DETAIL SHT. 1-11
	20	1pa1	PLATE *12 GA. x 22 13/16"	3	8	DETAIL SHT. 1-11
	4	1pc1	PLATE 1/4" x 3 1/4"	1	1 1/4	
	40	1ab1	L 1 1/2"x1 1/2"x3/16"	0	10	
	2	1aa4	L 1 1/2"x1 1/2"x3/16"	0	9 3/8	
	4	1ab4	L 1 1/2"x1 1/2"x3/16"	0	9 5/8	
	2	1ac2	L 2"x2"x1/4"	2	4 3/4	
	ONE	1ad2	L 2"x2"x1/4"	2	2 7/8	
	ONE	1pb4	PLATE *12 GA. x 31 1/4"	3	9	SEE DETAIL SHT. 1-4
	ONE	1pc4	PLATE *12 GA. x 31 3/16"	3	9	
	ONE	1pd4	PLATE *12 GA. x 29 3/8"	3	9	SEE DETAIL SHT. 1-4

MATERIAL GENERAL NOTES:

1) ALL MATERIAL TO BE A36 UNLESS NOTED.
2) ALL W-SHAPES TO BE GRADE A992 Gr 50 (Fy=50) UNLESS NOTED.
3) ALL ROUND HSS TUBES TO BE A500 Gr B (Fy=42) UNLESS NOTED
4) ALL RECTANGULAR OR SQUARE TUBES TO BE A500 Gr B (Fy=46) UNLESS NOTED
5) ALL STD. PIPES TO BE A53, TYPE E, Gr B (Fy=35) UNLESS NOTED

REVISION LOG		
REV	DATE	DESCRIPTION

PRINT DISTRIBUTION				
DATE	APP.	DIST.	SHOP	ERECTION

FINISH: CLEAN SSPC-SP6
1 S/C UNIVERSAL PRIMER
SHOP CONNECTIONS:
HOLES: UNLESS NOTED

STRUCTURE: BROCK SCHOOL OF BUSINESS - SAMFORD UNIV.
LOCATION: HOMEWOOD, AL
CUSTOMER: HOAR CONSTRUCTION
ARCHITECT: DAVIS ARCHITECTS
DETAIL: STAIR A

DRAWN: RB DATE: 7/14
CHECKED: JG DATE: 7/14
REF.DWGS. E1-1 THRU E1-4

ITEM NO. 1
JOB NO. 5172
DWG.NO. 1-19

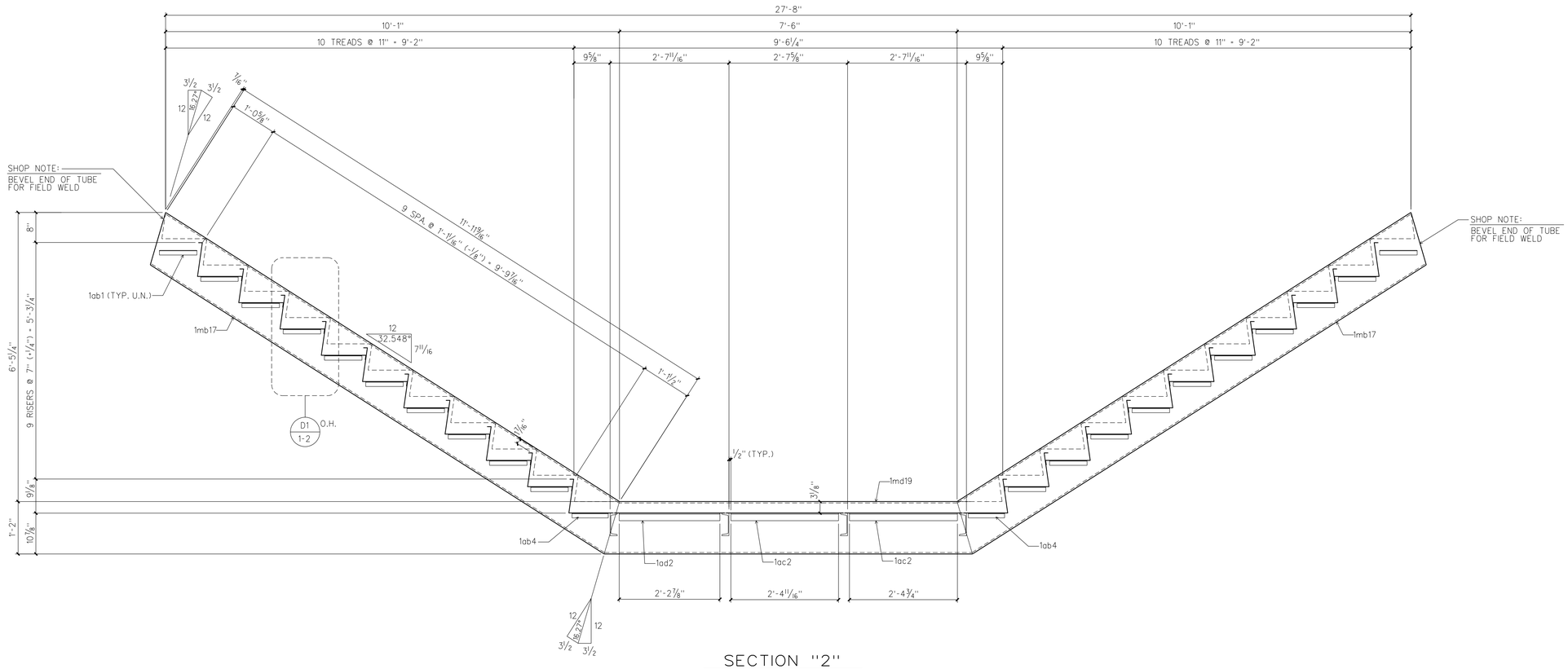

SECTION "2"

BILL OF MATERIAL

SHIP QTY	NO PCS	MARK	DESCRIPTION	LENGTH FT	LENGTH INS	REMARKS

MATERIAL GENERAL NOTES:

1) ALL MATERIAL TO BE A36 UNLESS NOTED.
2) ALL W-SHAPES TO BE GRADE A992 Gr 50 (Fy=50) UNLESS NOTED.
3) ALL ROUND HSS TUBES TO BE A500 Gr B (Fy=42) UNLESS NOTED
4) ALL RECTANGULAR OR SQUARE TUBES TO BE A500 Gr B (Fy=46) UNLESS NOTED
5) ALL STD. PIPES TO BE A53, TYPE E, Gr B (Fy=35) UNLESS NOTED

REVISION LOG		
REV	DATE	DESCRIPTION

PRINT DISTRIBUTION				
DATE	APP.	DIST.	SHOP	ERECTION

FINISH: CLEAN SSPC-SP6
1 S/C UNIVERSAL PRIMER
SHOP CONNECTIONS:
HOLES: UNLESS NOTED

STRUCTURE: BROCK SCHOOL OF BUSINESS - SAMFORD UNIV.
LOCATION: HOMEWOOD, AL
CUSTOMER: HOAR CONSTRUCTION
ARCHITECT: DAVIS ARCHITECTS
DETAIL: STAIR A

DRAWN: RB DATE: 7/14
CHECKED: JG DATE: 7/14
REF.DWGS. E1-1 THRU E1-4

ITEM NO. 1
JOB NO. 5172
DWG.NO. 1-20

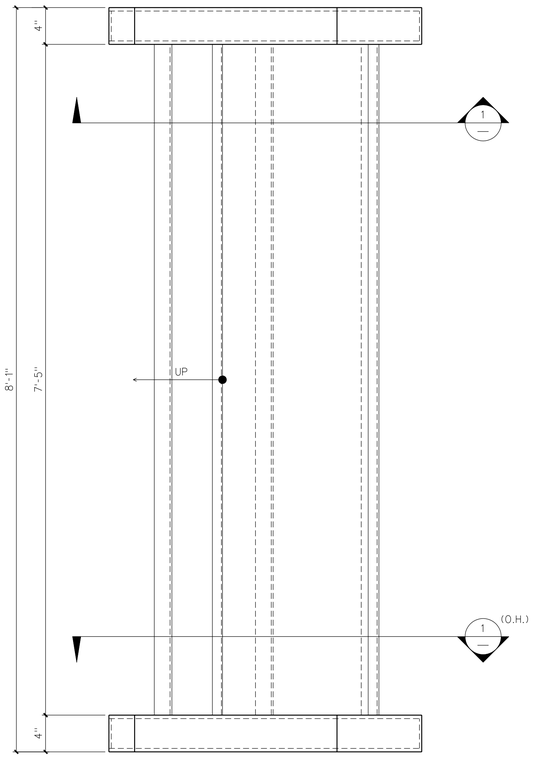

ONE ~ STAIR MK. 1-21S1

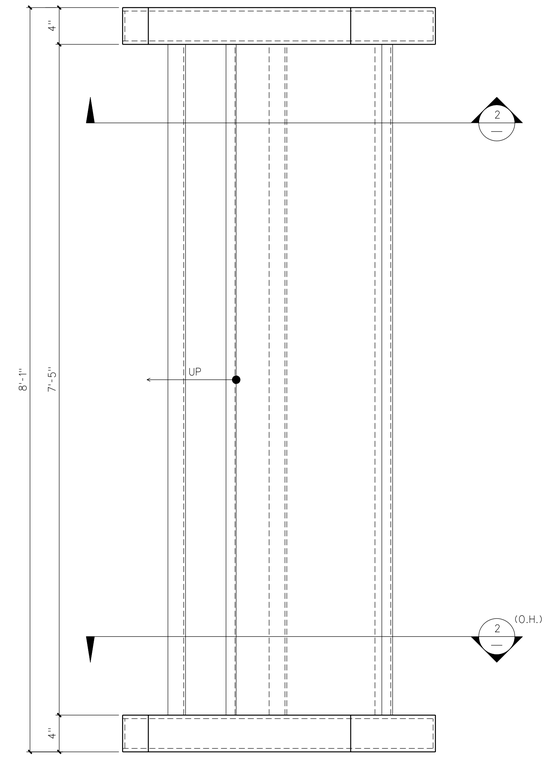

ONE ~ STAIR MK. 1-21S2

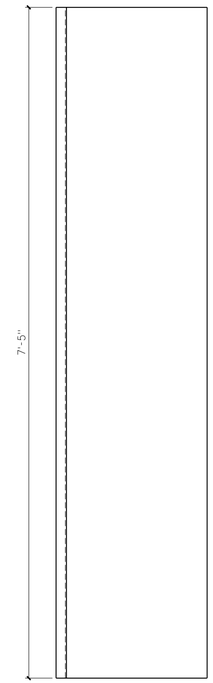

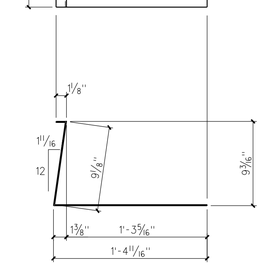

ONE ~ PLATE MK. 1pb21

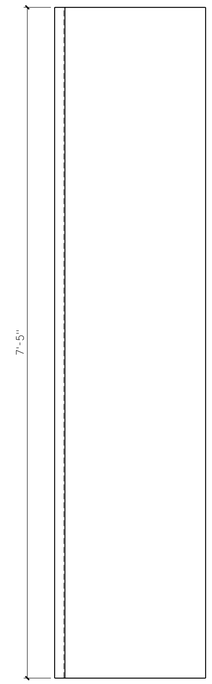

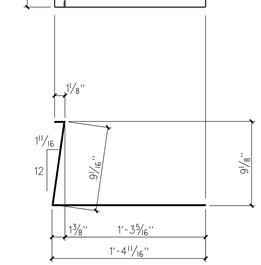

ONE ~ PLATE MK. 1pc21

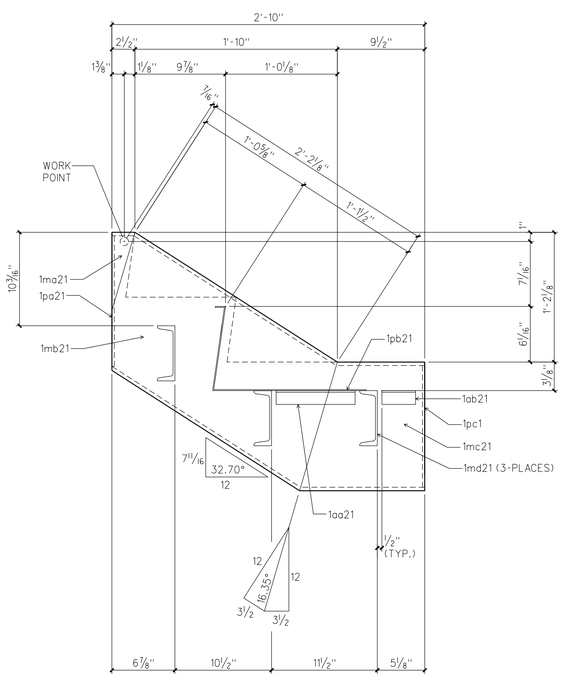

SECTION "1"

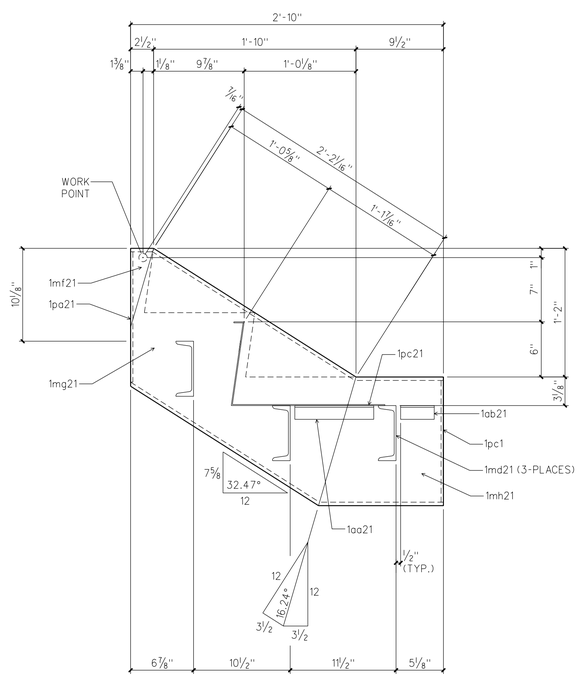

SECTION "2"

BILL OF MATERIAL

SHIP QTY	NO PCS	MARK	DESCRIPTION	LENGTH FT	LENGTH INS	REMARKS
ONE		1-21S1	STAIR			
	2	1ma21	HSS 14"x4"x3/8"	0	2 1/2	
	2	1mb21	HSS 14"x4"x3/8"	2	6 1/4	
	2	1mc21	HSS 14"x4"x3/8"	1	5 5/8	
	3	1md21	C6 x 8.2	7	5	
	ONE	1pb21	PLATE •12 GA. x 26 5/8"	7	5	
	2	1pa21	PLATE 1/4" x 3 1/4"	1	2 1/8	
	2	1pc1	PLATE 1/4" x 3 1/4"	1	1 1/4	
	2	1aa21	L 1 1/2"x1 1/2"x3/16"	0	8 9/16	
	2	1ab21	L 1 1/2"x1 1/2"x3/16"	0	3 5/8	
ONE		1-21S2	STAIR			
	2	1mf21	HSS 14"x4"x3/8"	0	2 1/2	
	2	1mg21	HSS 14"x4"x3/8"	2	6 1/8	
	2	1mh21	HSS 14"x4"x3/8"	1	1 9/16	
	3	1md21	C6 x 8.2	7	5	
	ONE	1pc21	PLATE •12 GA. x 26 9/16"	7	5	
	2	1pa21	PLATE 1/4" x 3 1/4"	1	2 1/8	
	2	1pc1	PLATE 1/4" x 3 1/4"	1	1 1/4	
	2	1aa21	L 1 1/2"x1 1/2"x3/16"	0	8 9/16	
	2	1ab21	L 1 1/2"x1 1/2"x3/16"	0	3 5/8	
2		1-21M1	PLATE			
	2		PLATE •12 GA. x 6 7/8"	7	4 7/8	

MATERIAL GENERAL NOTES:

1) ALL MATERIAL TO BE A36 UNLESS NOTED.
2) ALL W-SHAPES TO BE GRADE A992 Or 50 (Fy=50) UNLESS NOTED.
3) ALL ROUND HSS TUBES TO BE A500 Gr B (Fy=42) UNLESS NOTED
4) ALL RECTANGULAR OR SQUARE TUBES TO BE A500 Gr B (Fy=46) UNLESS NOTED
5) ALL STD.PIPES TO BE A53, TYPE E, Or B (Fy=35) UNLESS NOTED

REVISION LOG		
REV	DATE	DESCRIPTION

PRINT DISTRIBUTION				
DATE	APP.	DIST.	SHOP	ERECTION

FINISH: CLEAN SSPC-SP2
1 S/C UNIVERSAL PRIMER
SHOP CONNECTIONS:
HOLES: UNLESS NOTED

STRUCTURE: BROCK SCHOOL OF BUSINESS - SAMFORD UNIV.
LOCATION: HOMEWOOD, AL
CUSTOMER: HOAR CONSTRUCTION
ARCHITECT: DAVIS ARCHITECTS
DETAIL: STAIR A

DRAWN: RB DATE: 7/14
CHECKED: JG DATE: 7/14
REF.DWGS. E1-1 THRU E1-4

ITEM NO. 1
JOB NO. 5172
DWG.NO. 1-21