GORILLA PUMP STATIONS™
Further and Faster

Eco Water Solutions LTD

Gorilla Pump Stations

2026 Version 3

Product Catalogue

Sewer **Storm Water** **Grey Water**

- **Submersible Pumps**
- **Pump Stations**
- **Transparent Non-Return Valves**
- **High/Low-Level Alarms**
- **Certified Tank Solutions**
- **Bespoke Designs and Manufacturing**

PO Box 18 Foxton Beach

021 745 335 www.gorillapumpstations.co.nz

All details are correct at the time of printing, but are subject to change For the latest specifications please visit our website www.gorillapumpstations.co.nz

Ecoline Range

140L Greywater and Sewer Pump Station

A cost-effective solution for sewerage and greywater. Our 'Ecoline' station comes pre-plumbed with a transparent non-return valve, a 50mm electrical outlet for 50mm ducting, a vent kit and a mac-union for easy disassembly and inspection.

The pit-box can be buried in-ground, and comes with a pedestrian-rated lid.

Name	Flow Rate	Specifications
EL140-3 **Sewer** **Vortex**	50 L/m @ 9.4m 100 L/m @ 8.4m 150 L/m @7.2m 200 L/m @ 6m 250 L/m @ 4.5m	650mm x 450mx 800mm high **HIGH VOLUME** Sewer pump station. Comes with 40mm non return valve and mac union. Up to 32mm soft solids. Vortex high-volume pump. 100mm inlet connector included.

40mm outlet Pre-plumbed with transparent non-return valve 50mm electrical outlet for 50mm ducting
40mm fitted mac union Pedestrian rated solid lid 50mm vent kit

For Human Waste and Toilet Tissue Only– No Sanitary Products

GORILLA PUMP STATIONS

Further and Faster

Discounts for Ecoline range available for five units and over.

280L/340L Twin Sewer/ Greywater Pump Stations

TW280 **TW340**	Tank & pump. 900x650x800 Solid Removeable Lids 900x650x1000	Non-return valve fitted 1x 110mm rubber seal inlet 50mm electrical outlet with ducting including cable seal. PVC outlet pipe -40mm Mac Union for easy disconnection Ball valve with 40mm mac union 50mm electrical connection with seal kit to connect to 50mm electrical ducting supplied. 50mm vent pipe connection outlet supplied **Solid Lid**
TW280-3 **TW340-3**	750w Vortex Pump	With VH100 vortex pump.
TW280-7	1.5 HP heavy duty cast iron chopper pump. Cuts to 10mm diameter	With TPG-100 chopper pump Chopper pump cuts down to 10mm
Optional Extras		
GPS Alarm	High Level/ Low Level Alarm System	Complete with float and power lead. Kit set. 230V. Sounds alarm at plumber's pre-set level. Must be installed by a registered electrician.

- Pre plumbed with 40mm Mac Union and ball valve
- 50mm vent pipe connection included
- 50mm electrical outlet sealed to ducting
- Pedestrian rated lid
- Human Waste and Toilet Tissue Only (No Sanitary Products)

Silverback Range

Gorilla Pump Station 'Silverbacks' are easy to install units suitable for your retail customers.

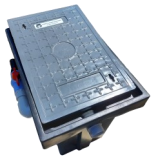

The Little Silverback: 115L		
Code	**Pump**	**Description**
LSB1	Vortex 750W	Size: 650mmx450mmx600 mm

The Big Silverback: 270L	
Code	**Description**
	PS1 Certified Tanks with AS/NZS 1546.1.2008 approval Size 710mm diameter, 850mm high Pre plumbed with 40mm pipework Single non-return valve
BSB1	With VH100 750w Vortex Pump
BSB7	With TPG-100 1.5HP Chopper Pump
GPS Alarm	High-Level/ Low-Level Alarm

GORILLA PUMP STATIONS
Further and Faster

GORILLA PUMP STATIONS
Further and Faster

Ecoline 115L Grey/Waste Water Pump Station

With Automatic Submersible Pump

EL115Grey

Designed for tiny homes and grey water disposal.

TPV-30 Pump

Up to 20mm Soft Solids

250W Vortex Pump

Performance *(with 32mm outlet. 25mm has slightly lower performance)*

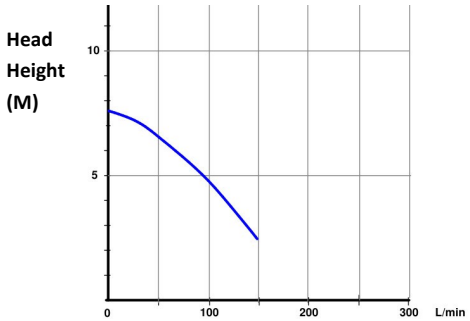

Complete With….

25mm Pipework

Mac Union for quick pump removal

Non—Return Valve

Removable basket to catch debris, hair and large lint.

Drill inlet to suit your specifications

Please refer to www.level.org.nz's greywater recycling guidelines for the safe use of this system

https://www.level.org.nz/water/wastewater/on-site-wastewater-treatment/greywater-recycling/

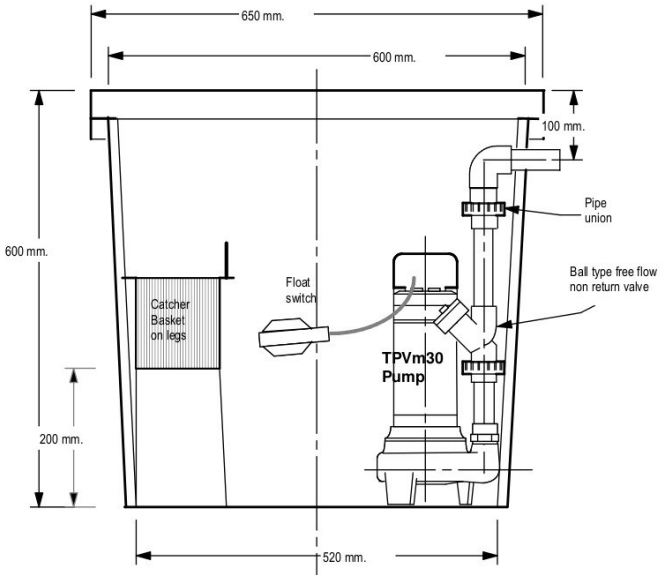

section

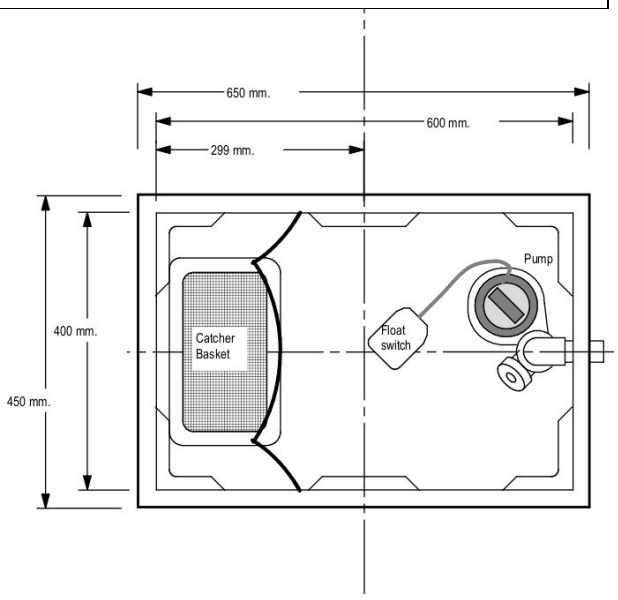

Plan view with Lid removed

320 Litre Sewerage Pump Stations

320SP	Tank & pump. Conical tank, 840 max dia. X 980h Fixed lid (not pedestrian-rated)	Non-return valve fitted 1x 110mm rubber seal inlet 50mm electrical outlet with ducting including cable seal. PVC outlet pipe -40mm Mac Union for easy disconnection Ball valve with 40mm mac union 50mm electrical connection with seal kit to connect to 50mm electrical ducting supplied. 50mm vent pipe connection outlet supplied
320SP-3 Vortex Pump	750w Vortex Pump	With VH100 750w vortex pump.
320 SP-7 Chopper Pump	1.5 HP Chopper Pump. Cuts to 10mm diameter	With 1.1KW TPG100 chopper pump
Optional Extras		
GPS Alarm	High Level / Low Level Alarm System	Complete with float and power lead. Kit set. 230v. Sounds alarm at plumber's pre-set level. Must be installed by a registered electrician.
320MH	Man Hole Riser 230H	Man hole riser 230mm high. With lid. Lid not pedestrian-rated.

- Pre plumbed with 40mm Mac Union and ball valve
- 50mm vent pipe connection included
- 50mm electrical outlet sealed to ducting
- Pedestrian rated lid
- Light weight– one person lift
- For Human Waste and Toilet Tissue Only– No Sanitary Products

GORILLA PUMP STATIONS
Further and Faster

PS1 Designed In - Ground Tanks

Our series of virgin plastic PS1 certified, in - ground tanks are perfect for heavy duty use and come in a range of sizes.

For Human Waste and Toilet Tissue Only– No Sanitary Products

These tanks have AS/NZS 1546.1.2008 approval

2100 Litre Size *1330 diameter x 1700 high*	Complete with 40mm pipework, mac union, non-return valves, inlet and outlet seals. Non-drilled entry and exit
SP2100-3 Vortex	With vortex 750w pump (VH100)
SP2100-7 Chopper	With 1.1KW chopper pump (TPG100)
1100 Litre Size *1330 diameter x 1190 high*	Complete with 40mm pipework, mac union, non-return valves, inlet and outlet seals. Non-drilled entry and exit. Maximum capacity 1410L
SP1100-3 Vortex	With vortex 750w pump (VH100)
SP1100-7 Chopper	With 1.1KW chopper pump (TPG100)
550 Litre Size *890 Diameter x 1080 High*	Complete with 40mm pipework, mac union, non-return valves, inlet and outlet seals. Non-drilled entry and exit Maximum capacity 605L
SP550-3 Vortex	With vortex 750w pump (VH100)
SP550-7 Chopper	With chopper 1.1KW pump (TPG100)
270 Litre Size *710 Diameter x 850 High*	Complete with 40mm pipework, mac union, non-return valves, inlet and outlet seals. Non-drilled entry and exit. Maximum capacity 270L
SP270-3 Vortex	With vortex 750w pump (VH100)
SP270-7 Chopper	With chopper 1.1KW pump (TPG100)
Optional Extras	
GPS Alarm	**High Level / Low Level Alarm. Highly recommended**

SP2100

SP1100

SP550

SP270

SP270 (Top View)

GORILLA PUMP STATIONS

Further and Faster

www.gorillapumpstations.co.nz

'King Koba' Pump Stations

With AS/NZ 4766, 3500 and 1546.1 Approved Chamber

- **2070mmx1020mm . 1300L capacity, 75kg**
- **Ribbed Tank** for strength and anchoring in-ground
- **Rounded Base** collects sediment for effective removal
- **Smooth Internal Finish** for easy cleaning
- **Tough construction**
- **Plastic lid** (steel lid available upon request)
- **Total pipework package included**
- **Hydraulic uplift anchoring drawings available**
- **Undrilled for plumber convenience**

Free New Zealand Wide Delivery For 'The King Koba' Range!

Code	Description
KK3	With 750W VH100 Vortex Pump
KK7	With 1.1KW TPG-100 Chopper Pump
KK12	With FGP 0.8HP 'Fighter' DC Grinder Pump
GPS–Alarm	High/Low Level Alarm. *Highly Recommended*

GORILLA PUMP STATIONS

Further and Faster

High-Pressure King Koba

Code: KK1300-10

A powerful high-pressure pump matched with a tough certified tank makes the ideal solution for high-pressure sewer mains. Available with a float switch or a sensor.

1300L 'King Koba' Certified Tank

- **AS/NZ 4766, 3500 and 1546.1 Approved**
- **2070mmx1020mm . 75kg**
- **Ribbed Tank** for strength and anchoring in-ground
- **Rounded Base** collects sediment for effective removal
- **Smooth Internal Finish** for easy cleaning
- **Tough construction**
- **Plastic lid** (steel lid available upon request)
- **Hydraulic uplift anchoring drawings available**
- **Undrilled for plumber convenience**

Inlet, outlet and pump chain supplied. Plumber to supply ball-type non-return valve and pipework to suit application.

1.5HP 'Growler' High-Pressure Pump

Code: 240-GRP150M

Switch Genie Pump Controller

Code: 228-SG-30 SF

Single pump controller panel. Provides power surge and run-dry protection.

High-Level Alarm

Code: 228LSKIT

Light and buzzer sounds when pre-set height reached.

Two-year warranty on pump, alarm and controller. Ten-year tank warranty

www.gorillapumpstations.co.nz

GORILLA PUMP STATIONS

Further and Faster

High-Pressure King Koba

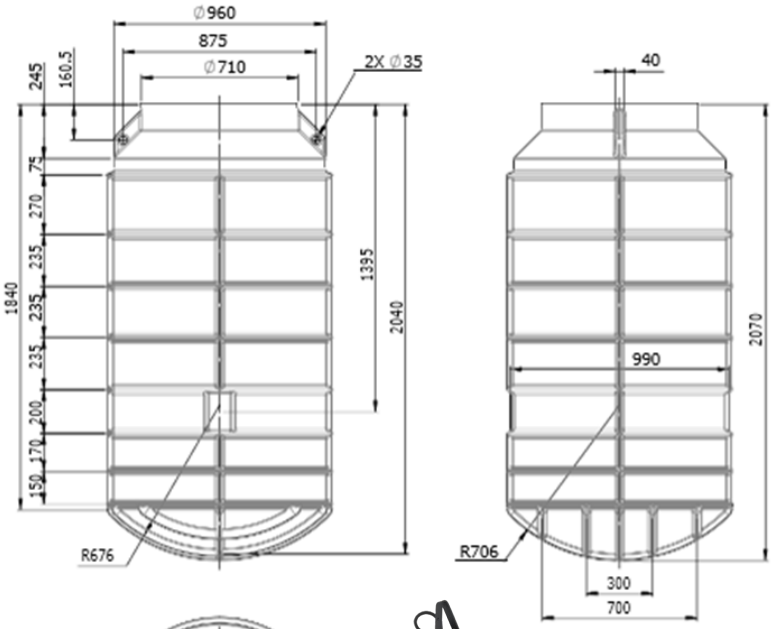

KK1300-10 H/P FLOAT

With Automatic Float-Switch (Code: 228-TRDF-710)

KK1300-10 H/P SENSOR

With Hydrostatic Sensor (Code: 228-PRW-05)

KK1300-10 TIMER CONTROLLER

Extra: Battery Pack Timer System (228-SG20-2)

Two-year warranty on pump, alarm and controller

Ten-year tank warranty

. Visit website for full warranty information.

www.gorillapumpstations.co.nz

Tank Risers

To Fit:

SP1 270-550-1100

320-SP Range

High Range

RL1	470mmx640mm C/W Lid. Four Outlets
RL2	470mmx590mm C/W Lid. Four Outlets
RL3	470mmx 535mm C/W Lid. Four Outlets
RL4	470mmx435mm C/W Lid. Three Outlets

Low Range

RS1	470mmx230mm C/W Lid.
RS2	470mmx180mm C/W Lid.
RS3	470mmx130mm

Note: These risers are not pedestrian-rated

GORILLA PUMP STATIONS

Further and Faster

GORILLA PUMP STATIONS
Further and Faster

GPS High-Low Level Alarms

Complete with a control box and float switch, the GPS-ALARM alarm emits an audible warning with flashing light at a pre-set water level. A mute button will silence an activated alarm, resetting when the alarm 'clears'.

This proudly New Zealand– made alarm suits all brands of pump station, and can be converted from a 'high-level' to a 'low-level' alarm simply by changing the configuration of the float switch wiring.

Specifications

Float Switch Finder 72.A1.1.000.1001 :

suitable for grey water

: polypropylene body, 10 metre H05 RN F neoprene cable

: CO SPDT contacts, 250VAC 10A resistive 8A inductive

: IP68, max. temperature +45°C

: max. pressure 10 BAR

Control Box : ABS

: Dimensions 125x125x100mm

: Cable entry glands for supply and float switch

: Buzzer IP40 80dB

Control box must be situated indoors or in an IP68-rated housing

NEW ZEALAND MADE

GORILLA PUMP STATIONS
Further and Faster

GPS Alarm Enclosure

This weatherproof enclosure allows easy installation of the GPS high/low level alarm for outside applications. It features a transparent lid for easy inspection, and can be opened and sealed without using tools.

Product Code: GPS ALARM ENCLOSURE

Weatherproof Rating: IP67

Opening System: Twin latches on the top of the enclosure

Dimensions

Internal: 300mm long, 200mm wide and 160mm deep

Total: 300mm long, 225mm wide and 165mm deep

Mounting to Surface: Via Screws

Comes pre-drilled for alarm cables. GPS alarm and float pictured sold separately

Storm Water Pump Stations

Code	Flow Rate	
Vortex 65 DP-2	20 L/m @ 4.6m 50L/m @ 4m 75 L/m @ 3m 100 L/m @ 2m 125 L/m @ 0m	450mm x 450mmx 600mm high Stormwater pump station. Comes with 40mm non - return valve and mac union. Up to 100 litres per minute TPO1118P impeller pump for clean and dirty storm water. 25mm soft solids
Vortex 140DP-2	20 L/m @ 4.6m 50L/m @ 4m 75 L/m @ 3m 100 L/m @ 2m 125 L/m @ 0m	650mm x 450mx 800mm high Stormwater pump station. Comes with 40mm non return valve and mac union. Up to 100 litres per minute. TPO1118P pump for clean and dirty storm water. 25mm soft solids
Vortex 140DP-3	50 L/m @ 9.4m 100 L/m @ 8.4m 150 L/m @7.2m 200 L/m @ 6m 250 L/m @ 4.5m	650mm x 450mx 800mm high **HIGH VOLUME** Stormwater pump station. Comes with 40mm non return valve and mac union. 750w Vortex Pump 35mm soft solids

Both of the above come with the following...

- Vortex System.
- 40mm outlet
- Pre-Plumbed with transparent non–return valve
- 50mm electrical outlet for 50mm ducting
- 40mm mac union fitted
- Pedestrian - rated slotted FRP lid

GORILLA PUMP STATIONS

Further and Faster

280L/340L Twin Stormwater Pump Stations

TW280 SW	Tank & pump. 900x650x800 Solid Removeable Lids	Non-return valve fitted 1x 110mm rubber seal inlet 50mm electrical outlet with ducting including cable seal. PVC outlet pipe -40mm Mac Union for easy disconnection Ball valve with 40mm mac union 50mm electrical connection with seal kit to connect to 50mm electrical ducting supplied. **Slotted lid**
Vortex **TW280-3 SW**	750w high volume heavy duty cast iron vortex pump	With VH100 pump. Stormwater Vortex Up to 32mm Soft Solids
Optional Extras		
GPS Alarm	High Level/ Low Level Alarm System	Alarm box complete with float and power lead. Kit set. 12/24/230v. Sounds alarm at plumber's pre-set level. Must be installed by a registered electrician.

- Pre plumbed with 40mm Mac Union and ball valve
- 50mm vent pipe connection included
- Pedestrian rated lid
- 50mm electrical outlet sealed to ducting

GORILLA PUMP STATIONS
Further and Faster

GORILLA PUMP STATIONS
Further and Faster

Storm Water Sumps

65PB	Pedestrian rated pit box lid	Overall Size: 450mm Wide, 450mm Long, 600mm High. 300x300 Base Comes with slotted FRP lid.
65PB1T	One tonne rated lid.	Overall Size: 450mm Wide, 450mm Long, 600mm High. 300x300 Base Comes with slotted FRP lid.
65PBSolid	Solid Pedestrian rated pit box lid	Overall Size: 450mm Wide, 450mm Long, 600mm High. 300x300 Base
115PBSolid	115L Pit Box. Solid Pedestrian-rated pit box lid	Overall Size:650mm long x450mm wide x600mm high Comes with solid FRP lid.
115PB	115L Pit Box. Slotted Pedestrian -rated pit box lid	Overall Size:650mm long x450mm wide x600mm high Comes with slotted FRP Lid
140PB	Pedestrian rated pit box lid.	Overall Size: 650mm Wide, 450mm Long, 800mm High. 500x300 Base Comes with slotted FRP lid.
140PBSolid	Pedestrian rated solid lid	Overall Size: 650mm Wide, 450mm Long, 800mm High. 500x300 Base Comes with solid FRP lid.
170PB	Pedestrian rated grate	Comes with slotted FRP lid. 650x450x1000
170PBSolid	Pedestrian rated solid lid	Comes with solid lid 650x450x1000

All Storm Water Sumps Are Sold Subject To Availability.

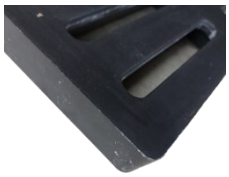

Standard Pedestrian Slotted Lid

Solid Pedestrian Lid

One Tonne Slotted Lid

Submersible Pump Range

	TPO1376 (N)	Clean Stormwater Only Up to 5mm Particles 400W 40mm down to 25mm outlet adaptor	*Below specs are at 40mm outlet* 20 L/m @ 6.6m 50 L/m @ 6m 75 L/m @ 5m
	VXP	For clean and dirty stormwater up to 25mm soft solids 450w motor 32mm pipework	118L/m @ 1m 75L/m @ 3m 20L/m at 5m Maximum head 5.5m
	TPO1118P **2**	Heavy-duty plastic body Designed for immersion in stormwater Internal float switch for easy installation and operation. 550W	*Below specs are at 40mm outlet* 50L/m @ 6.5m 100L/m @ 4m 150L/m @ 2m
	VH100 **3**	Stormwater/ Greywater/ Sewage Vortex For 'Poo, Paper and Pee' 1 HP Motor 32mm Soft Solids	*Below specs are at 50mm outlet* 50 L/m @ 9.4m 100 L/m @ 8.4m 150 L/m @ 7.2m 200 L/m @ 6m 250 L/m @ 4.5m
	VORT250	230 volt, 250w vortex-type pump for stormwater, greywater and sewage For 'Poo, Paper and Pee' Passes up to 27mm soft-solids 40mm outlet	200L/m @ 1m 150L/m @ 4m 100L/m @ 5.8m 50L/m @ 6.5m
	VORT400	230 volt, 400w vortex-type pump for stormwater, greywater and sewage For 'Poo, Paper and Pee' Passes up to 35mm soft-solids 50mm outlet	275L/m @ 1m 240L/m @ 3m 200L/m @ 5m 100L/m @ 8m
	VH150	1.5HP, 1.1kw vortex 'sucker-type' pump for higher-volume applications Up to 35mm soft solids	50L/m @ 10.5m head 100L/m @ 9.5m head 200L/m @ 8m head 300L/m @ 4m head

	TPG100 Chopper (7)	*Upgraded Model* Sewage Grinder Pump 1.5HP 1.1KW Cuts to 10mm	100L/m @ 11.5m 200L/m @ 9m 300L/m @ 7m 350L/m @ 5m *With 50mm outlet*
	C-50Z21.5SF (6) Chops to 15mm diameter	2 HP, 1.5KW Chopper Pump 20kg	50L/m @ 15.2m 100L/m @ 13.8m 200L/m @ 11.2m 300L/m @ 8.5m *With 50mm outlet*
	TPV30 Vortex (9)	250w'Sucker-type' Pump for Clean/Dirty Stormwater and Greywater. 32mm outet Up to 20mm soft solids	150L/m @ 2.5m 100L/m @ 4.5m 50L/M @ 6.5m *With 32mm outlet*
	'FGP' **'Fighter' Grinder Pump (12)** AS/NZS 60335.1:2020 AS/NZS 60335.2.41:2013+A1	For Heavy-Duty Wastewater Systems 32mm outlet size 600w brushless DC motor.	120L/m @ 5m 110L/m @ 7m 100L/m @ 9m 10m Shutoff *With 32mm outlet*
	'FGP1HP' Heavyweight 'Fighter' Grinder Pump AS/NZS 60335.1:2020 AS/NZS 60335.2.41:2013+A1	For Heavy-Duty Wastewater Systems 32mm outlet size 750w, 1HP brushless DC motor	188L/m at 3m 106L/m @ 15m *With 32mm outlet* Maximum Flow Rate: 195L/m Maximum Head: 17m
	PC160 'Sipper' Pump	For Shallow Clean Water Applications (e.g. surface water in basements) Electric sensor-switch activates at 40mm, reduces level to around 5mm 230v, 100w motor	60L/m @ 1.25m 40L/m @ 3.5m 20L/m @ 5m 10L/m at 5.5m *With 25mm outlet*
	DCX-1500A High-Pressure Pump **For lateral-lines and drip feeds <u>only</u>**	1.5HP, 1.1kw high-pressure pump. 25mm outlet Up to 5mm soft-solids	150L/m @15m 120L/m @20m 20L/m @33m *With 25mm outlet*

Whole-of-House Pump Range

	APE-X100	750w self-priming multi-stage jet pump Maximum flow rate 80L/m Maximum 48m head. Up to 6L suction lift 2.2 bar cut-in pressure controller
	AJS J 80	**Self-Priming Jet Pump for Small/Medium Houses and Irrigation** 230-240 volt, 600w motor 52L/m at approximately 1.5 bar. 25L/m at approximately 2.5 bar. 14L/m at approximately 3.0 bar 8L/m at approximately 3.5 bar.
	HYDROPAK 051	**Pump for Single-Bathroom Dwellings. Also Suits Garden Irrigation, Wash-Down Applications and Water Transferring and Circulation.** 200-240V 50Hz 400w 'turbine type' single-phase motor Maximum suction lift 6m, start pressure 26, Approx 30L/m @ 6m head
	AQV-1100	**1100W In-Tank House Pump. Complete with stand, float and pressure vessel.** Up to 47m head. Maximum flow rate 6000L/hr Switch-on pressure 1.5 bar.
	Pressure Vessels **2LPV (2.8L)** **8LPV (8L)**	Maximum pressure 10bar/145PSI 1"/25mm thread Maximum temperature 90 degrees Celsius

Please visit www.gorillapumpstations.co.nz for full specifications

GORILLA PUMP STATIONS
Further and Faster

GORILLA PUMP STATIONS
Further and Faster

Transparent Non-Return Valves

25mm Non-Return Ball Valve Code: UB25

- Mac Union Fitting
- Cleaning eye for convenient maintenance
- Glued Connections
- Vertical Installation Only

40mm Non-Return Ball Valve Code: UB40

- Mac Union Fitting
- Cleaning eye for convenient maintenance
- Glued Connections
- Vertical Installation Only

50mm Non-Return Ball Valve Code: UB50

- Mac Union Fitting
- Cleaning eye for convenient maintenance
- Glued Connections
- Vertical Installation Only

These non-return valves are only transparent when installed internally

The Kong Range

Powerful Pumps. Strong Stations.

Stormwater. Greywater. Sewage. Sorted.

GORILLA PUMP STATIONS
Further and Faster

www.gorillapumpstations.co.nz

GORILLA PUMP STATIONS
Further and Faster

Kong Chopper Sewerage Stations

The 'Fighter' is a powerful chopper pump designed for heavy-duty wastewater applications. Its brushless DC motor works like an electric car, providing instant torque. It also features lock rotor protection and constant speed under load.

The 'Fighter' features a two-year warranty.

Code	Description
280-FG	280L Pump Station. 900mmx650mmx800mm. Pedestrian-rated lid.
320-FG	320L Pump Station. Conical tank, 840mm max diameter X 980mm high. Fixed, non-pedestrian -rated lid. Risers in assorted sizes available.
	All of the above come complete with 40mm pipework, mac union, non-return valves, inlet/ outlet seals and non-drilled entry and exits. Other tank sizes available on request.
228-LSKIT	High-level alarm with alert buzzer and light. With float and power lead. Highly recommended

'Fighter' Chopper Pump

- 600w, 230v chopper motor
- AS/NZS 60335.1:2020 & AS/NZS 60335.2.41:2013+A1 approved
- Lock-rotor protection
- Brushless DC motor for greater torque.
- For 'pee, poo and toilet paper'

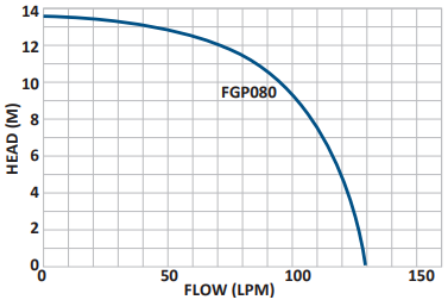

280L

280L (Top View)

320L

228-LSKIT Alarm

The Kong Range

Pump Supplied By

ARGON DISTRIBUTORS LTD

Kong Certified Sewerage Stations

The Kong certified sewerage station matches the 'Fighter' heavy-duty grinder pump with a certified 1300L pump station, making this the ideal solution for consented jobs.

Code	Description
1300-FG	**2070mmx1020mm , 75kg, 1300L pump station with 'Fighter' chopper pump.**
228-LSKIT	High-level alarm with alert buzzer and light. With float and power lead. Highly recommended

'Fighter' Chopper Pump	WARRANTY 2 YEAR
Power	230V, 4.0 Amps
Motor	0.8HP, 600w brushless DC 'grinder-type' motor
Performance	120L/m @ 5m head
Certification Standards	AS/NZS 60335.1:2020 AS/NZS 60335.2.41:2013+A1
Warranty Period	*Two Years*

'King Koba' Features

- **Tough Construction, AS/NZ 4766, 3500 and 1546.1 Approved**
- **Ribbed Tank** for strength and anchoring, undrilled for plumber's convenience.
- **Smooth Internal Finish** for easy cleaning, with rounded base for sediment removal.
- **Plastic lid** (steel lid available upon request)
- **Total pipework package included *(pictured)***
- **Hydraulic uplift anchoring drawings available**
- **10-year Warranty on Tank**

<u>Freight Free New Zealand Wide!</u>

The Kong Range

Pump Supplied By

ARGON DISTRIBUTORS LTD

Kong Vortex Sewerage Stations

Combines a pre-assembled pump station with a powerful 'Ultra' vortex pump featuring a two-year warranty

Code	Description
115-UL	115L Pump Station 650mmx450mmx600mm. Pedestrian-rated lid.
140-UL	140L Pump Station. 650mm x 450mx 800mm Pedestrian-rated lid.
280-ULTW	280L 'Twin' Pump Station. 900mmx650mmx800mm. Pedestrian-rated lid.
	All of the above come complete with 40mm pipework, mac union, non-return valves, inlet/ outlet seals and non-drilled entry and exits. Other tank sizes available on request.
228-LSKIT	High-level alarm with alert buzzer and light. With float and power lead. Highly recommended. (Not compatible with 115L volume chamber)

'Ultra' Vortex Pump

- 250w, 230v motor
- Up to 27mm soft-solids
- 5 meter electrical lead
- Double mechanical seals and jam-resistant vortex system for dependability
- 40mm discharge piping

Discharge	Head Height
200L/m	1m
150L/m	4m
100L/m	5.8m
50L/m	6.5m

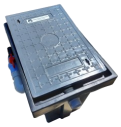

140L

320L

228-LSKIT

280L (Top

The Kong Range

Pump Supplied By

ARGON DISTRIBUTORS LTD

Kong Stormwater Stations

A sturdy stormwater station and the Ultra vortex pump makes the 'Kong' series an ideal clean and dirty stormwater solution

115L Pit Box

140L Pit Box

Code	Description
115-SWV	115L Pump Station 650mmx450mmx600mm. Pedestrian-rated slotted lid.
140-SWV	140L Pump Station. 650mm x 450mx 800mm Pedestrian-rated lid.
	All of the above come complete with 40mm pipework, mac union and non-return valves.

'Ultra' Vortex Pump

- 250w, 230v motor
- Up to 27mm soft-solids
- 5-meter electrical lead
- Double mechanical seals and jam-resistant vortex system for dependability
- 40mm discharge piping

Discharge	Head Height
200L/m	1m
150L/m	4m
100L/m	5.8m
50L/m	6.5m

The Kong Range

Pump Supplied By

ARGON DISTRIBUTORS LTD