BILL OF MATERIALS

ITEM	QTY	PART NUMBER	DESCRIPTION
1	1	200020472	Vault Neck and Plug Cover Assembly 4848x12 LADWP 1-802 G-1B
2	4	100009239	ROD THREADED COIL YELLOW DIP 3/4 X 10-1/2
3	8	100007010	HEX COIL NUT 3/4-4.5 POST YELLOW DIP
4	8	100007136	WASHER FLAT 3/4 REGULAR TYPE A ZINC

EXTENSIONS ARE AVAILABLE IN THE FOLLOWING SIZES:

A. 100012395 (VN44-R6-12), 6" EXTENSION SECTION WT. 802 lbs.
B. 100012393 (VN44-R12-12), 12" EXTENSION SECTION WT. 1604 lbs.

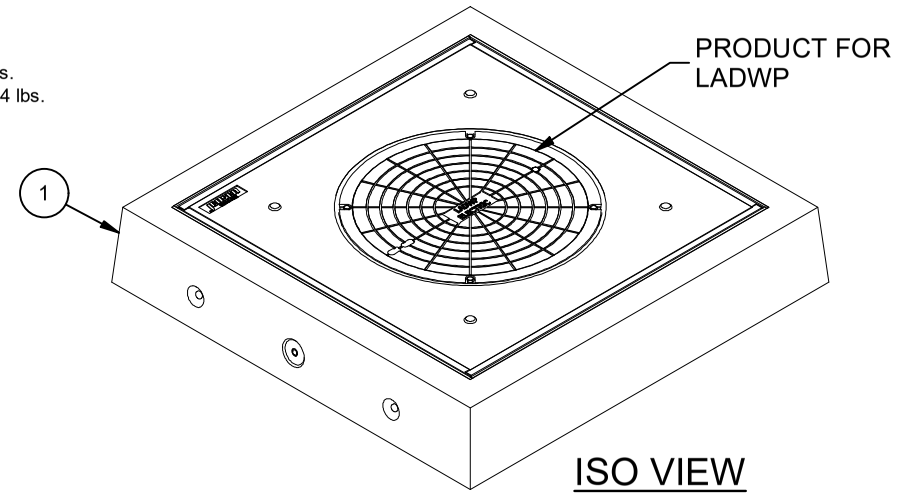

ISO VIEW

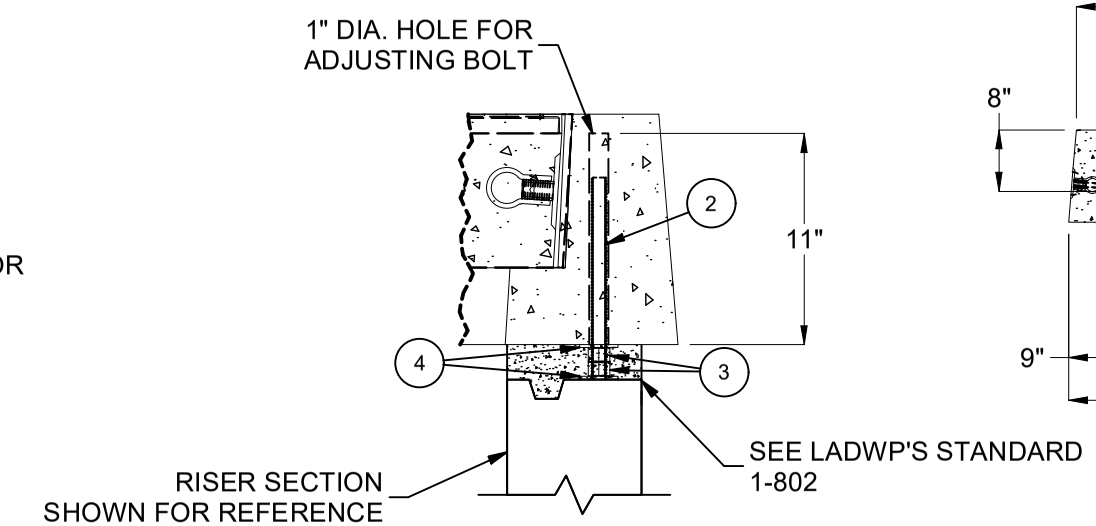

DETAIL D

IF NEEDED TO ADJUST
TO FINISH GRADE

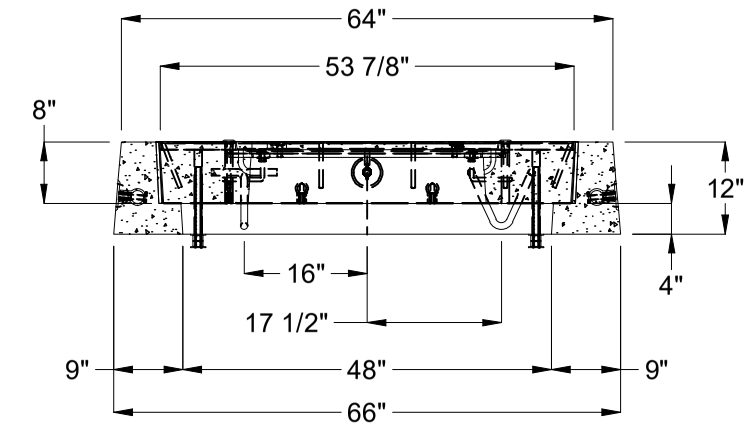

SECTION A-A

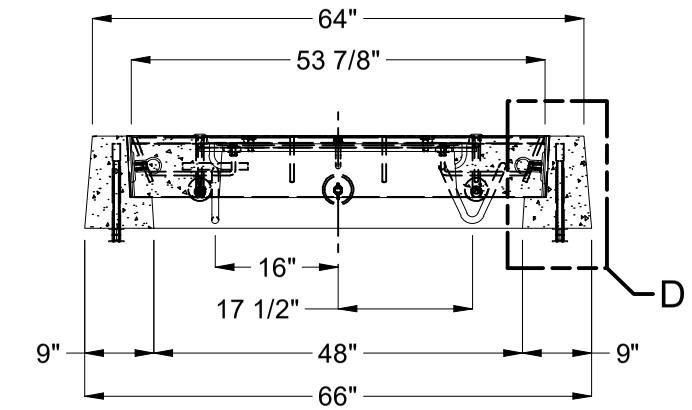

SECTION B-B

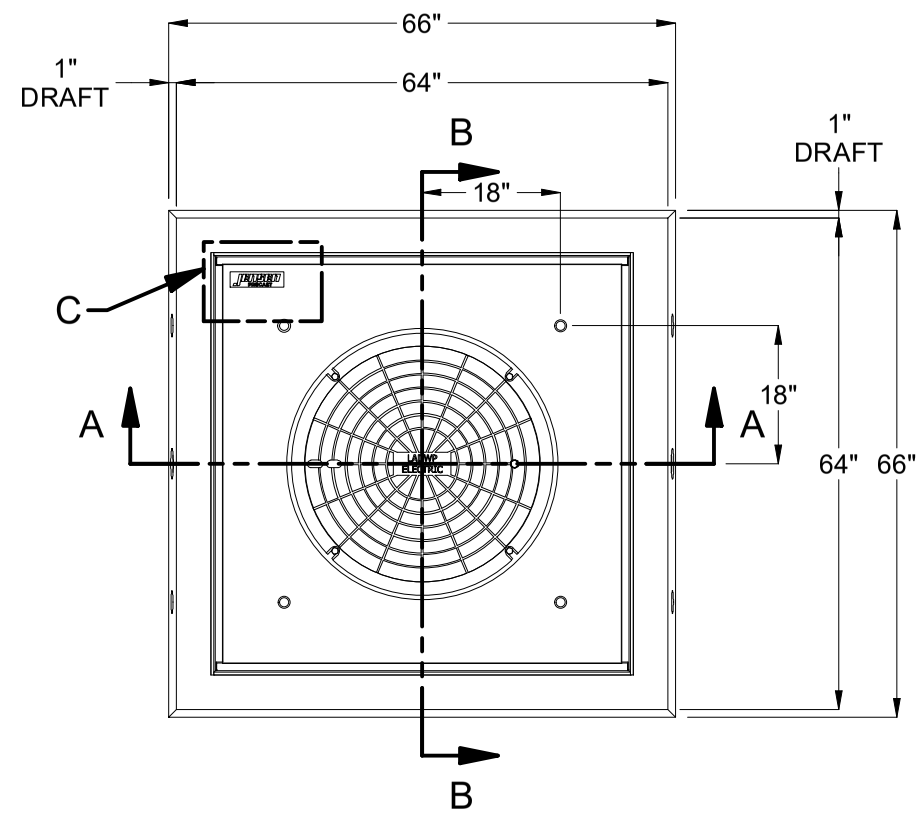

PLAN VIEW

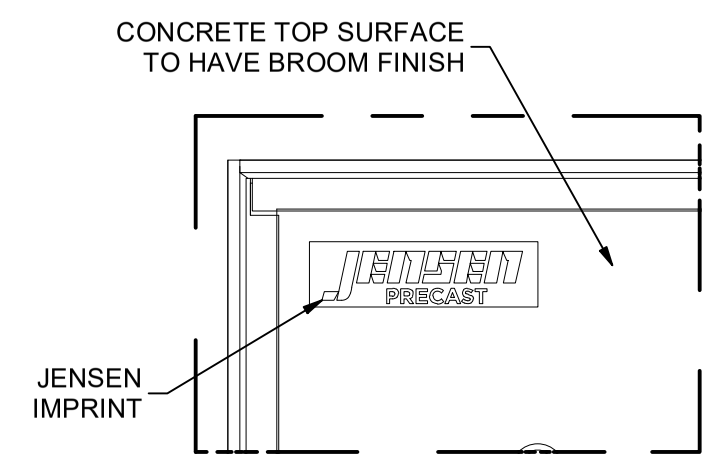

DETAIL C

NOTES:

- STANDARDS. AASHTO LRFD BRIDGE DESIGN SPECIFICATIONS, 8TH EDITION, WITH 2022 CALTRANS AMENDMENTS, CITY OF LOS ANGELES BUREAU OF ENGINEERING STANDARD PLAN S-601-3, P178-R8 WHERE APPLICABLE, MANUAL PART H, ASTM C-857. STRUCTURAL CALCS. #33389, 33389B. RESTRAINT SYSTEM PER LADWP SPEC 1-802.2.
- MATERIAL. CONCRETE, F'c=5,500 PSI. MIX TO INCLUDE FLY ASH AND DCI. REINFORCEMENT PER ASTM A-706, Fy=60,000.
- LOADS. VERTICAL LIVE LOAD: AASHTO HL-93, INCLUDING GREATER OF HS-20 TRUCK, TANDEM, OR PERMIT. LIVE LOAD SURCHARGE PER LA BOE PART H, FIGURE H 374.2A. SOIL LATERAL LOADS: 40 PCF (DRY), 81 PCF (SATURATED). SEE VAULT OR MANHOLE DRAWING FOR SOIL BEARING CAPACITY INFORMATION. DESIGN SOIL DENSITY IS 120 PCF.
- LOADS NOT INCLUDED. DESIGN DOES NOT INCLUDE COOPER E-80 RAILROAD LOADS OR LATERAL OR SURCHARGE LOADS THAT ARE PRODUCED BY FOOTING OR FOUNDATIONS ADJACENT TO THE STRUCTURE. THIS SUBSTRUCTURE SHALL BE KEPT AT LEAST IN A 1:1 RATIO AWAY FROM ALL FOOTINGS AND FOUNDATIONS, UNLESS THE ENGINEER OF RECORD APPROVES IN WRITING.
- INSTALLATION LIMITS OF CONCRETE EXTENSIONS IS 5'-0" DEEP.
- EACH CONCRETE SECTION SHALL BE MARKED ON THE INSIDE & OUTSIDE WITH "JENSEN PRECAST", THE DESIGNATION "DWP/FA-CN" AND THE DATE OF THE POUR.
- "JENSEN", THE YEAR, AND THE DESIGNATION "FA-CN" SHALL BE CAST IN THE TOP OF THE NECK, THE SIDE OF THE COVER, AND ON THE INSIDE OF THE EXTENSIONS.
- EACH PIECE TO BE STENCILIED WITH ITS PART NO.
- BROOM FINISH ON COVER MUST HAVE AND MAINTAIN A MINIMUM OF 0.6 SLIP RESISTANCE AND/OR 0.35 SKID RESISTANCE PER S-601-3.
- EXTENSIONS MAY BE REUSED IF UNDAMAGED.
- ALL INSTALLATIONS SHALL COMPLY WITH ALL OTHER LOCAL GOVERING CODES AND REGULATIONS INCLUDING CALIFORNIA PUBLIC UTILITIES COMMISSION REGULATIONS.
- INSTALLATION OF NECK AND EXTENSIONS PER LADWP 1-802.

REVISION HISTORY

REV	DESCRIPTION	DATE	APPROVED
B	INITIAL RELEASE INVENTOR	11/20/2023	

BURY DEPTH:	0.0' - 0.0' to Top		
WATER LEVEL:	3.0'	APPROX. WEIGHT:	3332.51 Lbs
DESIGN SPEC:	AASHTO LRFD	LOADING SPEC:	AASHTO HL-93
AGENCY:	LADWP	AGENCY SPEC:	1-802 G-1B

JENSEN PRECAST EST. 1968

WWW.JENSENPRECAST.COM

©2023 Jensen Precast- All rights reserved.
All materials appearing as Jensen Precast documents and the like are proprietary work product and are protected under U.S. copyright and other laws.
Unless in conjunction with business conducted with Jensen Precast, any use of Jensen Precast work product without express, written consent is prohibited, and recipient is prohibited from distributing any and all work product to non-approved third parties under penalty of civil action.

DESCRIPTION:	Vault Neck and Plug Cover Layout 4848x12 30"C LADWP 1-802 G-1B LAYOUT REVIEW		REV: B
PART NUMBER:	100008617	DRAWN BY:	J. Prado
CREATED:	4/5/2022	MODIFIED:	11/20/2023
			SHEET: 1 OF 1

100008617.idw