2'–6" x 4'–0" HEAVY TRAFFIC INTERCEPT DUCTED BOX x 44" DEEP

NOTES:

INTERCEPT BOX DESIGNED IN ACCORDANCE WITH AASHTO H–20–44 TRAFFIC BRIDGE LOADING USING 5,500 PSI COMPRESSIVE STRENGTH CONCRETE AND 60,000 PSI YIELD STRENGTH ASTM A–706 STEEL REINFORCEMENT. PER CALC. #31603.

CAST IRON COVER DESIGNED FOR H–20–44 HEAVY TRAFFIC LOADING.

INTERCEPT BOX TO BE PLACED ON A MIN. 6" BASE OF CRUSHER RUN FOR EASE OF INSTALLATION AND EVEN LOAD DISTRIBUTION.

ORDERING INFORMATION:

K3048DP44–TCI–11 FOR ASSEMBLY AS SHOWN
TOTAL WEIGHT OF ASSEMBLY SHOWN IS 4,860 lbs.

1. PB3048–B–05, BASE SLAB, WT. 1,700 lbs.
2. PB3048D–I27–05, 27" INTERMEDIATE SECTION, WT. 1,170 lbs.
3. PB3048–R6, 6" RISER SECTION, WT. 210 lbs.
4. PB3048–T8–11, 8" TOP SLAB (CG–3048–T8–11 (XXX). W/CAST IRON FRAME CAST IN. WT. 1180 lbs.
5. ALHAMBRA FOUNDRY A–1473 TRAFFIC CAST IRON FRAME (10–20–20) CAST IN TOP SECTION W/ TWO PIECE C.I. COVER 'EDISON' (08–10–20). AND (08–10–21). WT. 740 Lbs.
6. 6" x 7" DIA. SUMP x 4" DEEP. BOTTOM SECTION.
7. 25" x 26" DUCTED K.O. x 12" DEEP, BOTTOM SECTION.
8. 8" x 16" K.O. x 3" DEEP, BOTTOM SECTION.
9. ⊕ 1" DIA. BLIND GROUND ROD HOLE. BOTTOM SECTION.
10. 2 TON RISS ANCHOR x 3 3/8", TOP SLAB (4) SHELL MTD. BOTTOM SECTION (4) CORE MTD. RISER RING (4) SHELL MTD.
11. 7/8" DIA. x 9" GALV. VERTICAL PULL IRON, BOTTOM SECTION.

ORDERING INFORMATION:

PER EDISON SPEC. HP220, PB–5–INT
TOTAL WEIGHT OF ASSEMBLY SHOWN IS 3,627 lbs.

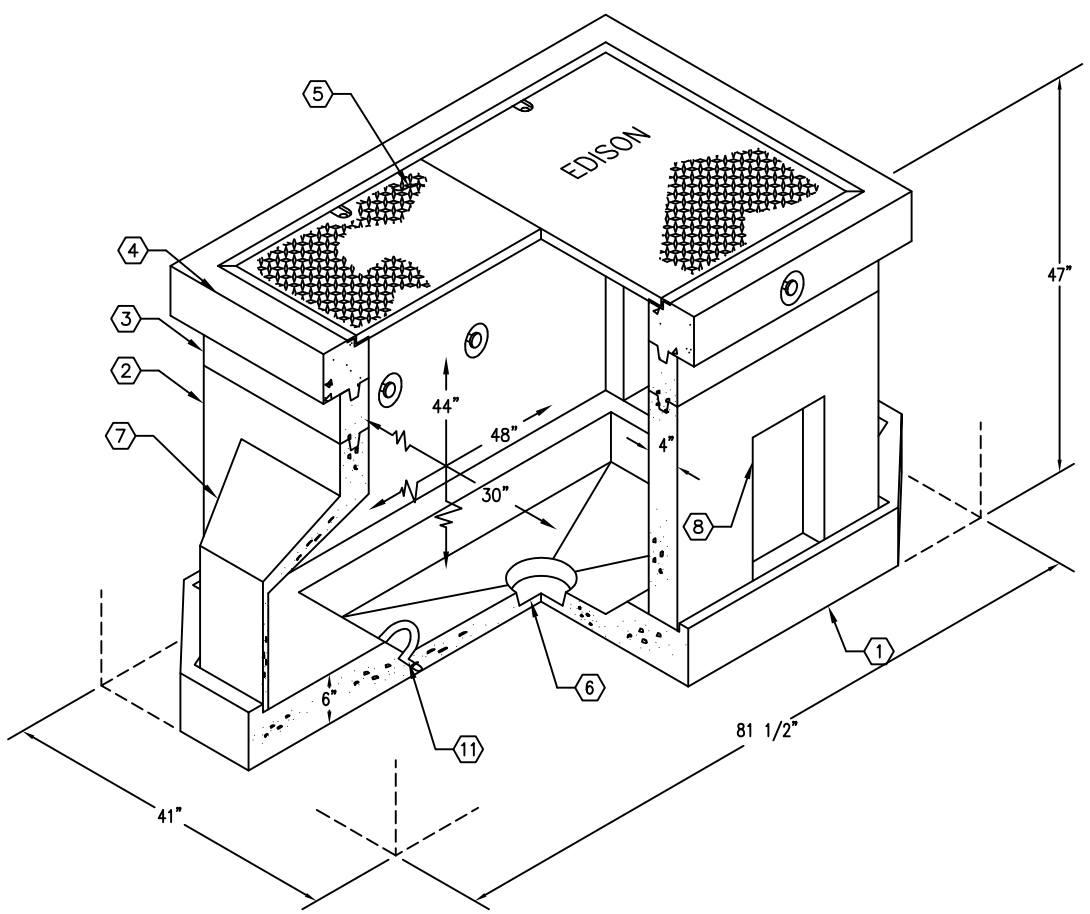

MINIMUM EXCAVATION SIZE:
4'–5" x 7'–10" x DEPTH REQ'D.

JENSEN PRECAST

AUTOCAD REL. 14

K3048–DI44–TCI–11
PER EDISON SPEC. HP220, PB–5–INT 10–02–03

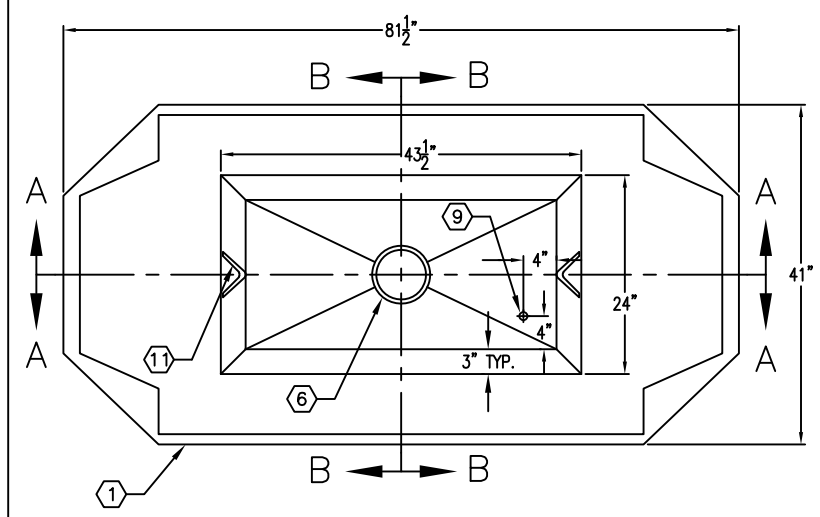

PLAN VIEW OF BOTTOM SLAB

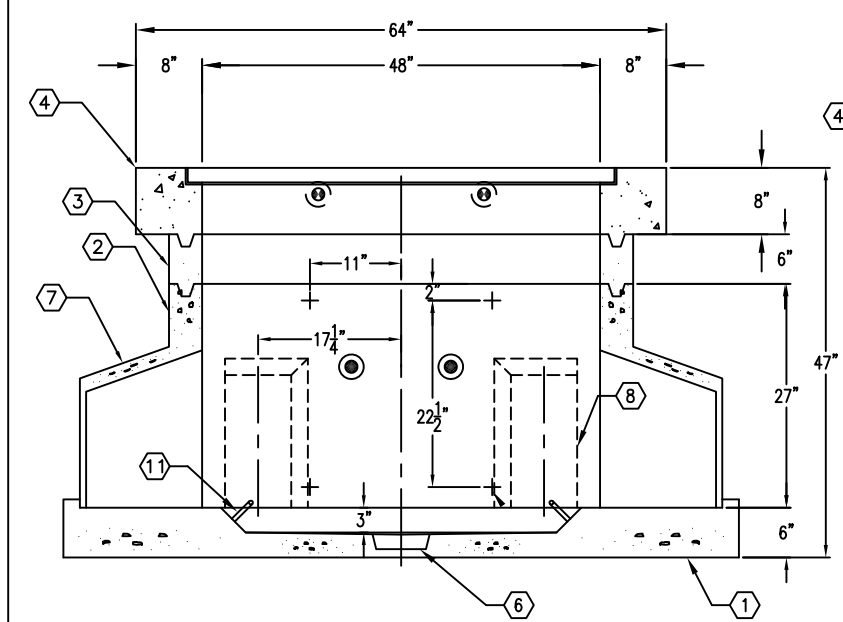

SECTION A–A

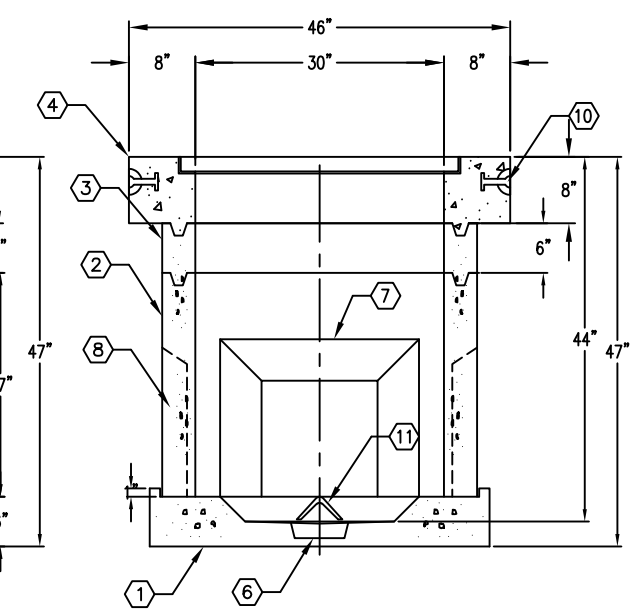

SECTION B–B

JENSEN PRECAST

#	DATE	DESCRIPTION	BY

K3048–DI44–TCI–11
PER EDISON SPEC. HP220, PB–5–INT 10–02–03