5'–0" x 8'–0" PARKWAY WITCH ENCLOSURE x 6'–6" DEEP

NOTES:

- MANHOLE DESIGNED IN ACCORDANCE WITH AASHTO H–20–44 TRAFFIC BRIDGE LOADING USING 5,500 PSI [37.92MPa] COMPRESSIVE STRENGTH CONCRETE AND 60,000 PSI [413.2MPa] YIELD STRENGTH ASTM A–706 STEEL REINFORCEMENT PER CALC. #30381.
- COVER DESIGNED FOR PARKWAY LOADING PER CALC. #30661.
- MANHOLE TO BE PLACED ON A MIN. 6" BASE OF CRUSHER RUN FOR EASE OF INSTALLATION AND EVEN LOAD DISTRIBUTION.
- EXTERIOR SURFACES OF STRUCTURE(S) SHALL BE BE COATED WITH AN APPROVED, TRANSPARENT, WATERPROOFING SEALER
- ALL INTERIOR SURFACES SHALL BE PAINTED WITH ONE COAT OF FLAT LATEX WHITE PAINT.
- STRUCTURES TO BE STENCILED, "JENSEN PRECAST", WITH "TIME" AND "DATE OF POUR", AND S.D.G. &E. STOCK NUMBER ON EXTERIOR AND INTERIOR WALLS.
- 7/8" X 1 3/4" CONSEAL GASKET (90 FT. REQ'D) WILL BE SHIPPED WITH EACH VAULT.

MATERIAL LIST:

1. PB586–B66–10, 66" BOTTOM SECTION (CG–586–B66–10), WT. 16,100 Lbs.
2. PB586–R24–10, 24" EXTENSION SECTION (CG–586–R24–10), WT. 4,350 Lbs. (NOT SHOWN – AVAILABLE ON SPECIAL ORDER.)
3. PB586–R12–10, 12" SPECIAL EXTENSION SECTION (CG–586–R12), WT. 2,175 lbs., (NOT SHOWN – AVAILABLE ON SPECIAL ORDER.)
4. PB586–T12H–10PSRAL, 12" TOP SECTION (CG–586–T12–10) W/HATCH CAST–IN. WT. 2,175 Lbs.
5. CAB3–60102–CH2–TRX–SK12 60" X 102" PARKWAY COVER, WT. 796.5 lbs.
6. 12" x 13" DIA. SUMP x 4" DEEP, BOTTOM SECTION (1) CORE MTD.
7. 5" DIA. CONTERM (5563G) WITH LOCATOR FOR 6" WALLS, BOTTOM SECTION (40) SHELL MTD.
8. 1/2" BRONZE GROUND INSERT WELD TO REINF., BOTTOM SECTION (4) CORE MTD.
9. 1" COIL INSERT, BOTTOM SECTION (4) CORE MTD.
10. 7/8" x 4 1/2" W/LEGS SS PULL IRONS, BOTTOM SECTION (2) CORE MTD.
11. 2 TON X 3 3/8" GALV. RISS FOR HANDLING, 24" EXT. SECTION (4) CORE/SHELL MTD.; 12" EXT. SECTION (4) CORE/SHELL MTD.; TOP SECTION (4) CORE/SHELL MTD.
12. 4 TON x 9 1/2" GALV. RISS FOR STRIPPING, BOTTOM SECTION (4) SURFACE MTD.
13. 7/8" DIA. x 6" STAINLESS STEEL PULL IRON. LOCATE AS FOLLOWS: BOTTOM SECTION (4) CORE MTD.
14. 4 TON x 4 3/4" GALV. RISS FOR HANDLING, BOTTOM SECTION (4) SURFACE MTD.

JENSEN PART NO.		S. D. G. & E. STOCK NO.
PB586–B66–10	66" BOTTOM SECTION	S248174.
PB586–R24–10	24" EXTENSION SECTION	S248162.
PB586–R12–10	12" EXTENSION SECTION	S336208.
PB586–T12–10P	TOP SECTION	S248170.
CAB3–60102–CH2–TRX–SK12 (10–30–586PHSRAL–10)	TRAXPLATE ALUMINUM TOP	S248164.

ORDERING INFORMATION:

K586–SE78–10P FOR ASSEMBLY AS SHOWN.
WEIGHT FOR ASSEMBLY AS SHOWN IS 19,000 Lbs.
K586–SE90–10P FOR ASSEMBLY W/12" SPECIAL EXTENSION SECTION.
WEIGHT FOR ASSEMBLY W/12" SPECIAL EXTENSION SECTION IS 21,172 Lbs.
APPROVED FOR S.D.G. & E. SPEC. 3316.

MINIMUM EXCAVATION SIZE:
7'–0" x 10'–6" x DEPTH REQ'D.

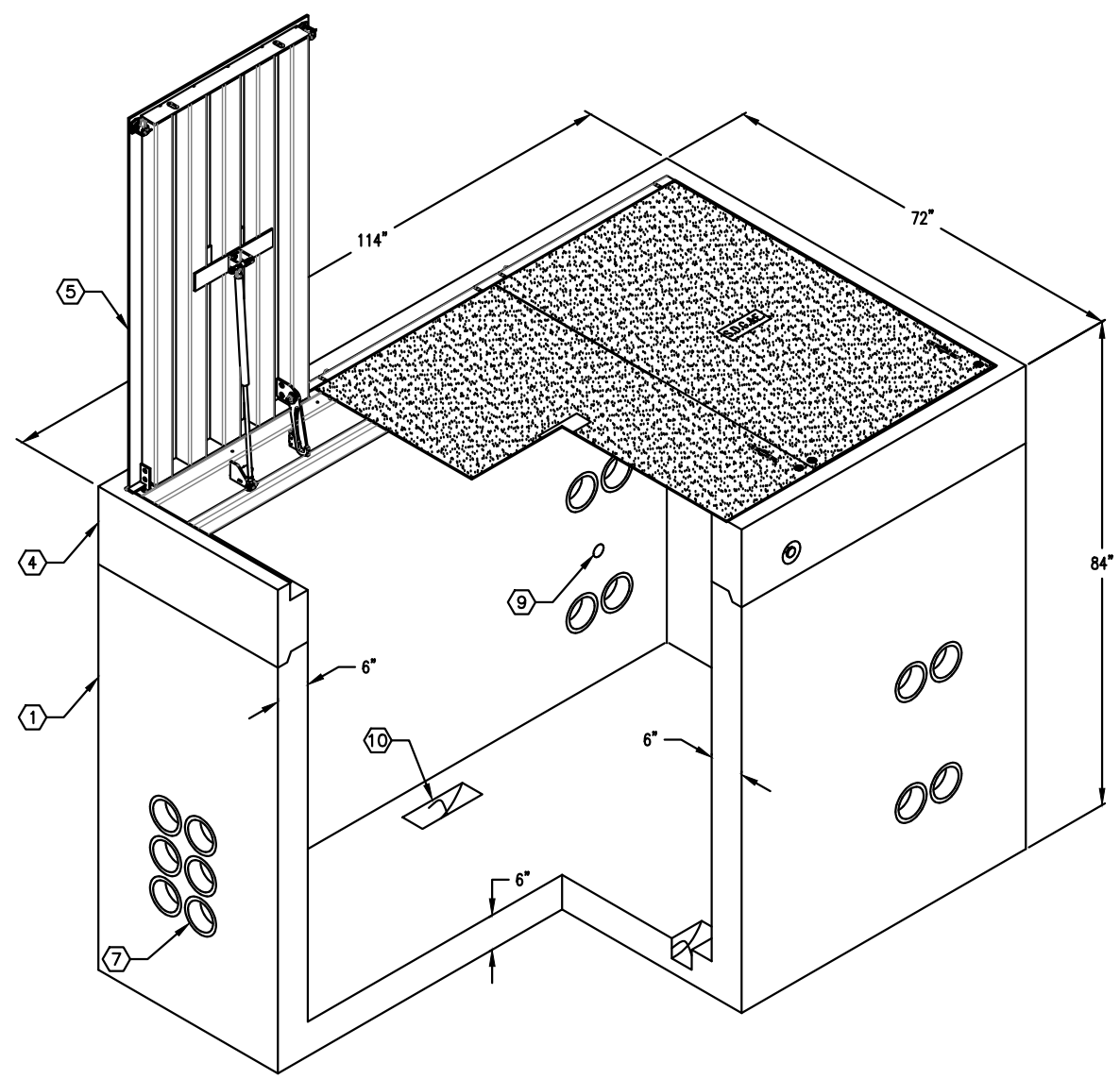

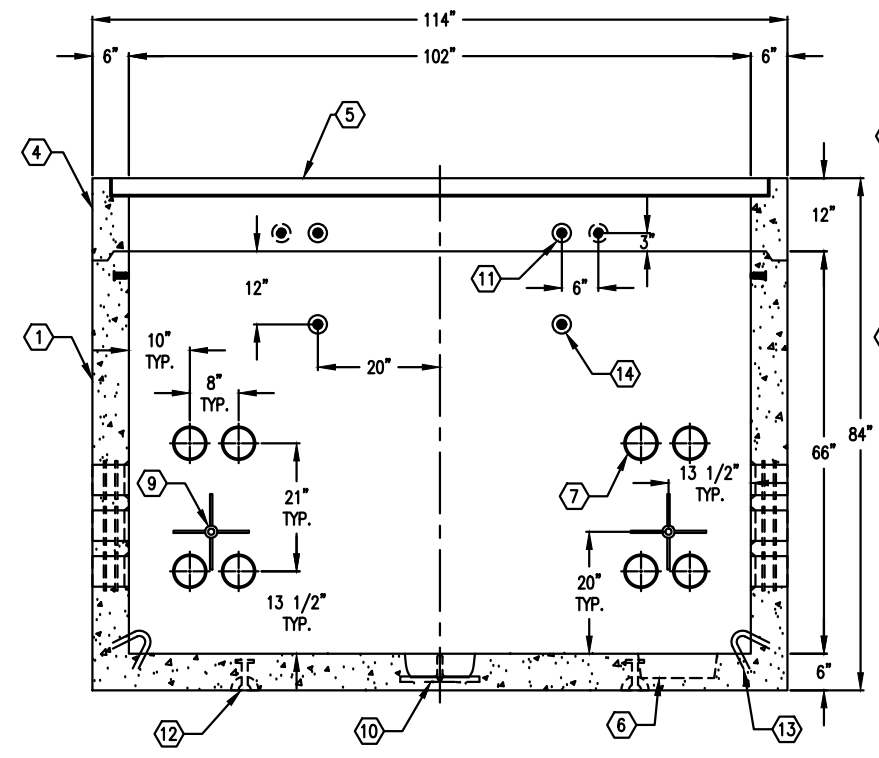

SECTION A–A

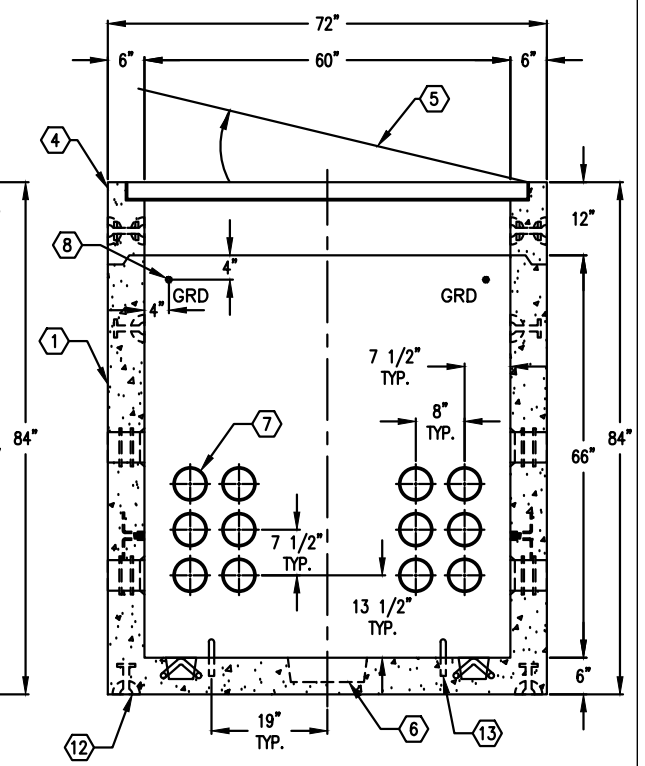

SECTION B–B

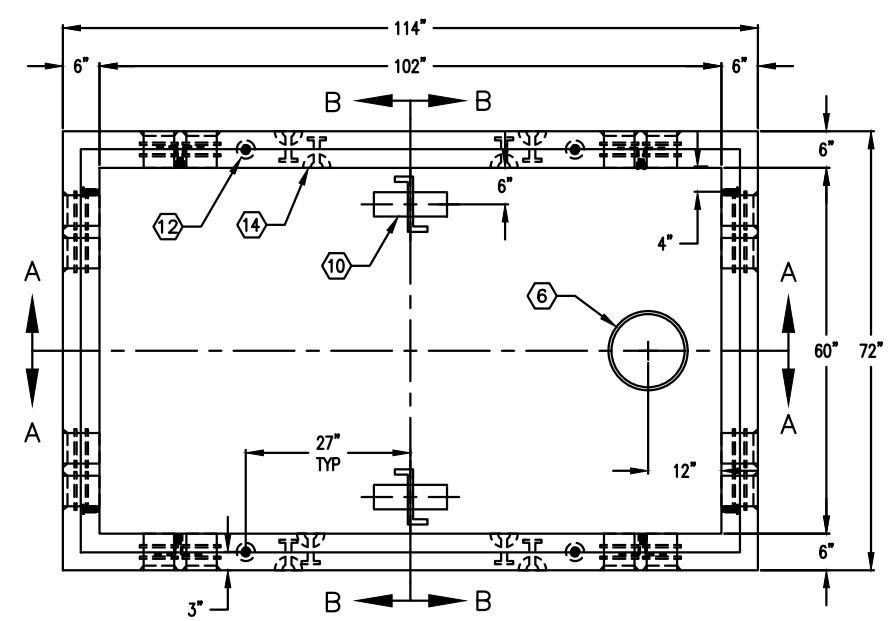

PLAN VIEW

DATE	DRAWN BY	ORIGIN:	SALES REP.	CHECKED BY
08–22–17	DM	K586–SE78–10P	JL	–

REVISION HISTORY

#	DATE	DESCRIPTION	BY	CHK	SHEET
P	08–22–17	UPDATE COVER	DM	–	OF
N	12–09–14	REV DWG REFERENCE	EO	–	

K586–SE78–10P

PER S.D.G. & E. SPEC. 3316 REV.A

JENSEN PRECAST
14221 SAN BERNARDINO AVE.
FONTANA, CA 92335