8' x 14' x 9'- 4"
DISTRIBUTION VAULT

MODEL K814-FV112-10

PER S.D.G. & E. SPEC
3325

NOTES:

STRUCTURE DESIGNED IN ACCORDANCE WITH:

AASHTO H–20 TRAFFIC BRIDGE LOADING

ASTM C–857 STANDARD PRACTICE FOR MINIMUM STRUCTURAL DESIGN LOADING FOR UNDERGROUND PRECAST CONCRETE UTILITY STRUCTURES

AMERICAN CONCRETE INSTITUTE ACI 318–05

CONCRETE COMPRESSIVE STRENGTH F'c = 5500 PSI

REINFORCEMENT IN ACCORDANCE WITH ASTM A–706 WITH A YIELD STRENGTH OF Fy = 60,000 PSI.

6" MINIMUM COMPACTED GRANULAR MATERIAL RECOMMENDED FOR SUB–BASE FOR EASE OF INSTALLATION AND EVEN LOAD DISTRIBUTION.

1. UV814–B56–10, 56" BOTTOM SECTION, WT. 34,575 lbs.
2. UV814–T56–10, 56" TOP SECTION, WT. 32,050 lbs.
3. 13" x 14" DIA. SUMP x 5" DEEP, W/GRATE RECESS
4. 6" DIA. K.O. x 5" DEEP, (16).
5. 5" DIA. TERMINATOR, (96)
6. 7/8" DIA. PULL IRON GALV.
7. 1/2" BRONZE GROUND INSERT WELDED TO REINF.

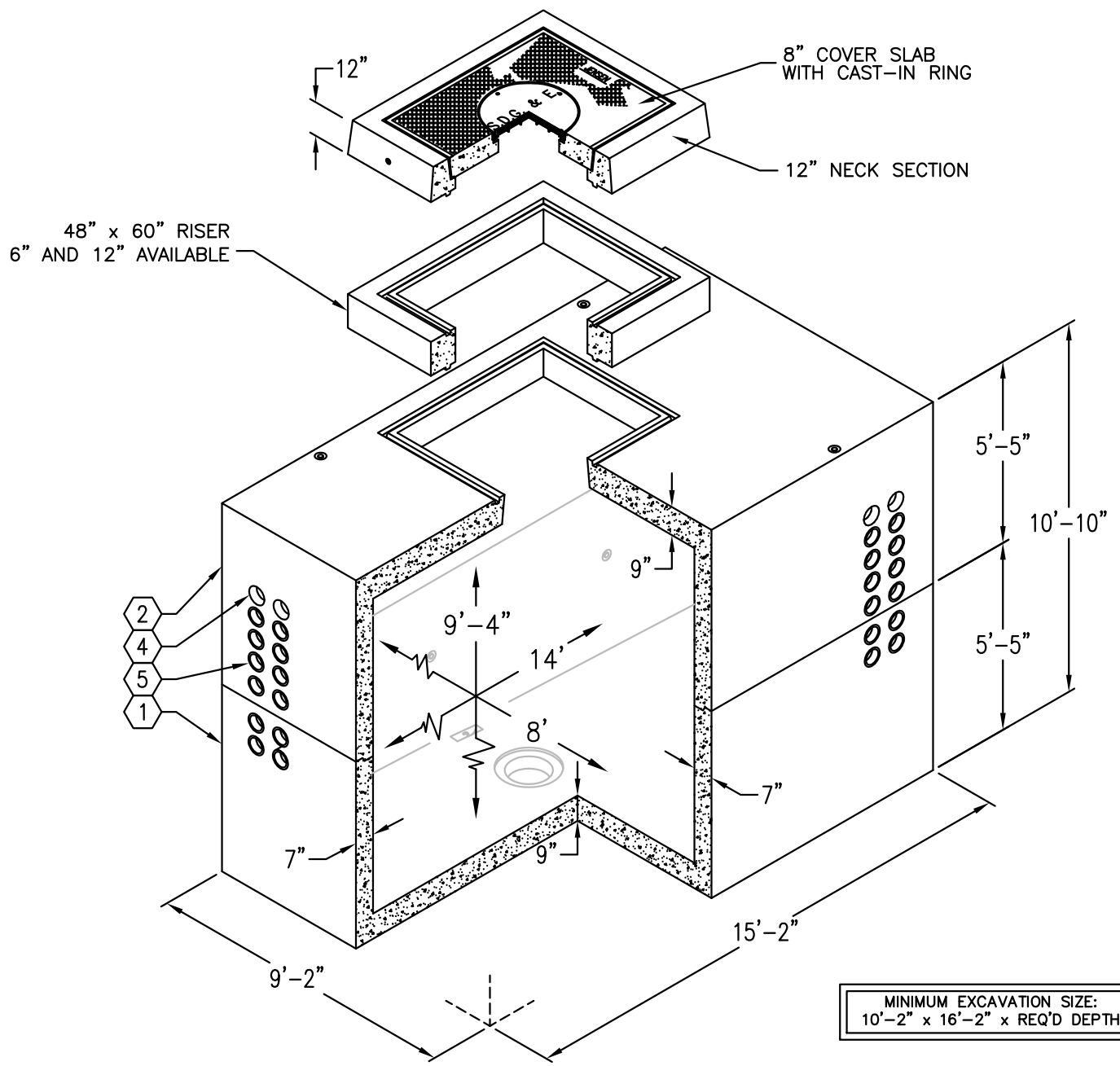

MINIMUM EXCAVATION SIZE:
10'–2" x 16'–2" x REQ'D DEPTH

01/14/08
K814–FV112–10–A.dwg
© 2012 Jensen Precast

Jensen Precast reserves the right to make changes to product design and/or dimensions without notice. Please contact Jensen Precast whenever necessary for confirmation or advice on product design.

JENSEN PRECAST

8' x 14' x 9'- 4"
DISTRIBUTION VAULT

MODEL K814-FV112-10

PER S.D.G. & E. SPEC
3325

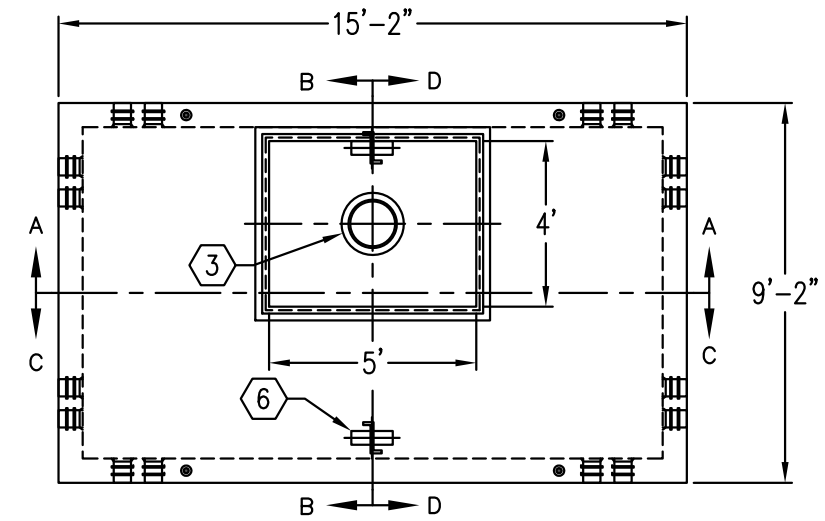

PLAN VIEW

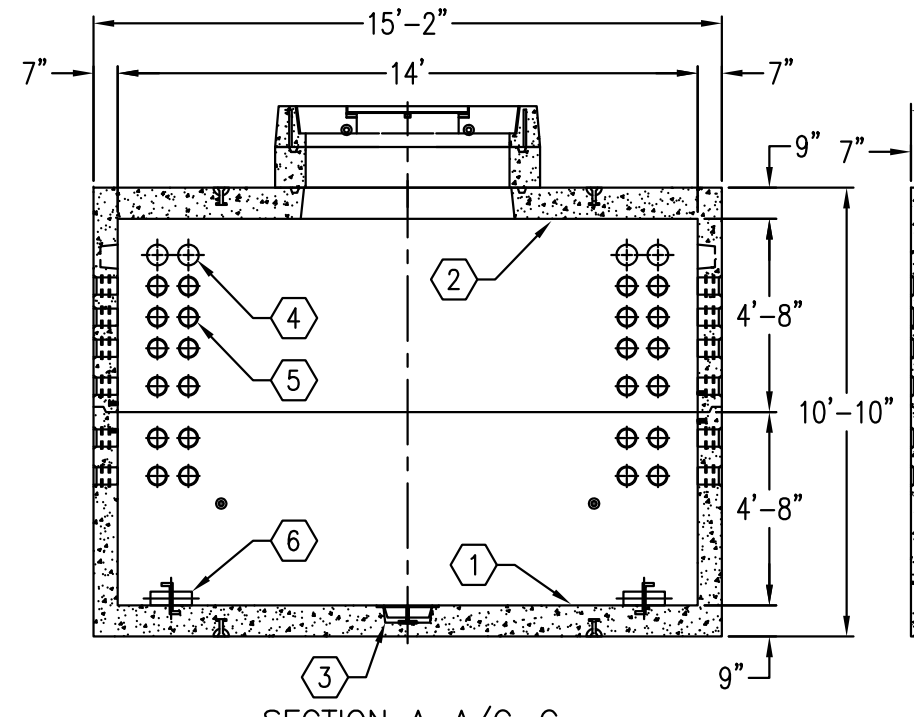

SECTION A–A/C–C

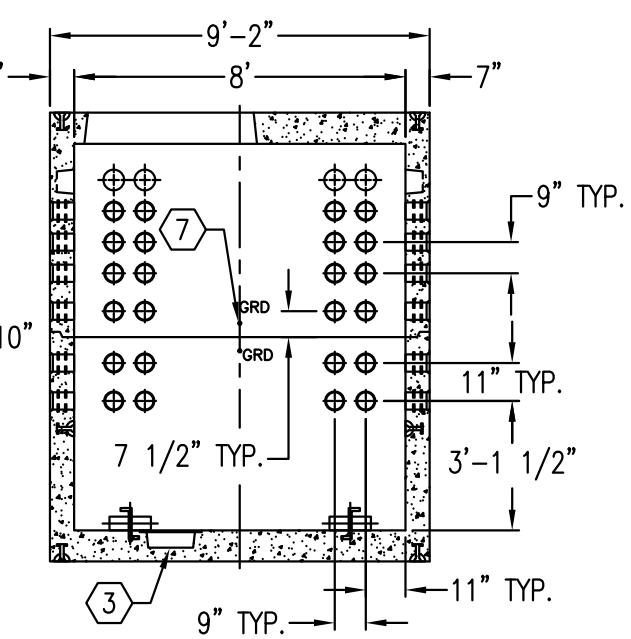

SECTION D–D
(B–B SIMILAR)

01/14/08
K814–FV112–10–B.dwg
© 2012 Jensen Precast

Jensen Precast reserves the right to make changes to product design and/or dimensions without notice. Please contact Jensen Precast whenever necessary for confirmation or advice on product design.

JENSEN PRECAST