8'–0" x 16'–0" FLAT WALL VAULT x 7'–0" DEEP

MATERIAL LIST

ITEM	PART NO.	DESCRIPTION	CAGE NO./ LOCATE	WEIGHT/ MOUNT
1	UV816X-B27-12LACOLA	27" BOTTOM SECTION	CG-816X-B27-12LACOLA	34,100 lbs
2	UV816X-T57-12LA-202COLA	57" TOP SECTION	CG-816X-T57-12LA-202COLA	45,600 lbs
3	KNOCK OUT	8" x 9" DIA. SUMP x 6" DEEP	BASE SLAB	(1) CORE
4	55-30-53	5" DIA. TERM	TOP SECTION	(32) SHELL
5	55-30-61	6" DIA. TERM	BOTTOM SECTION	(4) SHELL
			TOP SECTION	(12) SHELL
6	KNOCK OUT	14" x 15" VENT K.O. x 6 1/2" DEEP	TOP SECTION	(4) SHELL
7	SPI-45LA	7/8" DIA x 4 1/2" GALVANIZED PULL IRON WITH LEGS	TOP SECTION	(8) CORE
8	KNOCK OUT	12" DIA. K.O. x 9 1/2" DEEP	BOTTOM SECTION	(2) CORE
9	55-10-424	1/2" PLASTIC INSERT	BOTTOM SECTION	(22) CORE
			TOP SECTION	(88) CORE
10	55-20-813	8 TON 13 3/8" RISS LIFTER	BOTTOM & TOP SECTION	(4) SURFACE
11	55-20-806	8 TON 6 3/4" RISS LIFTER	BOTTOM SECTION	(4) CORE
12	55-30-20	2" DIA. TERM GROUND ROD	BOTTOM SECTION	(12) CORE
13	55-35-06SS-316	7/8" DIA 316 STAINLESS STEEL RECESSED PULL IRON	BOTTOM SECTION	(1) CORE
			TOP SECTION	(4) CORE

NOTES:

- STANDARDS. AASHTO LRFD BRIDGE DESIGN SPECIFICATIONS, 4TH EDITION, WITH 2010 CALTRANS AMENDMENTS, CITY OF LOS ANGELES BUREAU OF ENGINEERING STANDARD PLAN S–601, LATEST, MANUAL PART H, ASTM C–857. STRUCTURAL CALCS. #33467.
- MATERIAL. CONCRETE, F'c=5,500 PSI. MIX TO INCLUDE FLY ASH AND DCI. REINFORCEMENT PER ASTM A–706, Fy=60,000.
- LOADS. VERTICAL LIVE LOAD: AASHTO HL–93, INCLUDING GREATER OF HS–20 TRUCK OR TANDEM. LIVE LOAD SURCHARGE: PER LA BOE PART H, FIGURE H 374.2A, MINIMUM 80 PSF (TO BOTTOM OF VAULT). SOIL LATERAL LOADS: 40 PCF (DRY), 81 PCF (SATURATED), SATURATED SOIL CONDI TIONS 3'–0" BELOW GRADE. SOIL BEARING CAPACITY = 1500 PSF. DESIGN SOIL DENSITY IS 120 PCF.
- LOADS NOT INCLUDED. DESIGN DOES NOT INCLUDE COOPER E–80 RAIL–ROAD LOADS OR LATERAL OR SURCHARGE LOADS THAT ARE PRODUCED BY FOOTING OR FOUNDATIONS ADJACENT TO THE STRUCTURE. THIS SUBSTRUCTURE SHALL BE KEPT AT LEAST IN A 1:1 RATIO AWAY FROM ALL FOOTINGS AND FOUNDATIONS, UNLESS THE ENGINEER OF RECORD APPROVES IN WRITING.
- INSTALLATION. VAULT TO BE PLACED ON A MIN. 6" BASE OF CRUSHER RUN FOR EASE OF INSTALLATION AND EVEN LOAD DISTRIBUTION. BASE MATERIAL IN ACCORDANCE WITH SECTION 200–2 OF THE SSPWC (GREEN BOOK).
- INSTALLATION LIMITS. VAULT SHALL HAVE A MINIMUM COVER OF 1'–6" AND A MAXIMUM COVER OF 4'–0".
- EACH CONCRETE SECTION SHALL BE MARKED ON THE INSIDE & OUTSIDE WITH "JENSEN PRECAST", THE DESIGNATION "DWP/FA–CN", AND THE DATE OF THE POUR.
- EACH CONCRETE SECTION SHALL HAVE CAST–IN ON THE INSIDE "JENSEN", THE YEAR, AND THE DESIGNATION "FA–CN".
- NO SHARP OR ROUGH EDGES ON THE TERMINATORS ENTERING THE VAULT.
- K44–VN12–12TCOLA VAULT NECK AND COVER, WITH APPROVED CAST IRON COVER TO BE USED WITH THIS VAULT.
- EACH PIECE TO BE STENCILED WITH ITS PART NO.
- ADDITIONAL SUBMITTAL, PERMIT AND CONSTRUCTION PLAN REVIEW WILL BE REQUIRED FOR EACH PROJECT LOCATION. SUBMIT TO CITY ENGINEER FOR APPROVAL PRIOR TO START OF ANY CONSTRUCTION.
- ALL INSTALLATIONS SHALL COMPLY WITH ALL OTHER LOCAL GOVERNING CODES AND REGULATIONS INCLUDING CALIFORNIA PUBLIC UTILITIES COMMISSION REGULATIONS.

THE FOLLOWING MATERIAL TO BE SHIPPED WITH EACH VAULT:
(a) 7/8" x 1 3/4" CONSEAL GASKET (90 FT. REQ'D)

ORDERING INFORMATION

K816X–FV84–12COLA FOR ASSEMBLY AS SHOWN.
APPROVED FOR L.A.D.W.P. SPEC. H–202 G–1
TOTAL WEIGHT OF ASSEMBLY AS SHOWN IS 79,700 lbs.

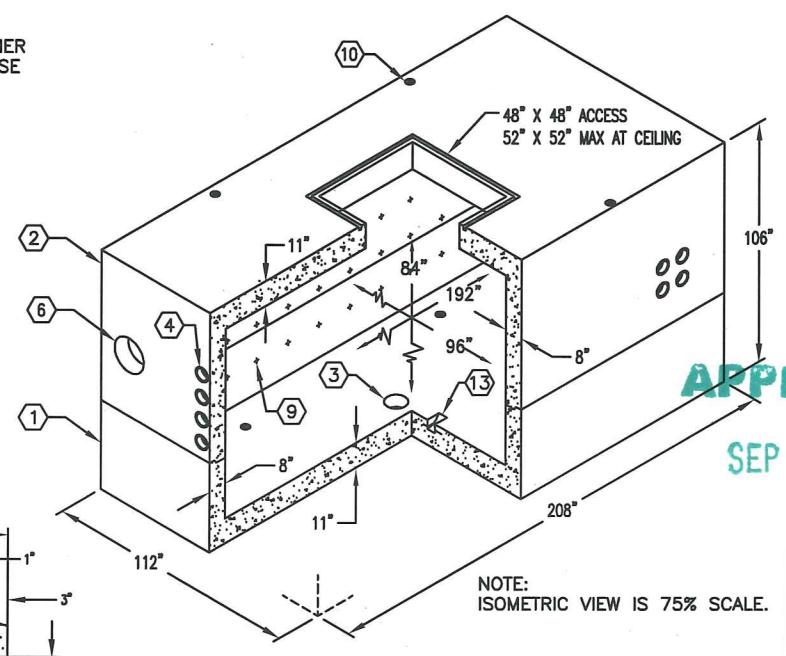

NOTE:
ISOMETRIC VIEW IS 75% SCALE.

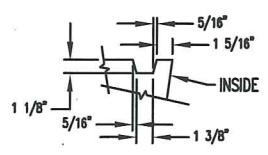

JOINT DETAIL – GROVE IN SLAB

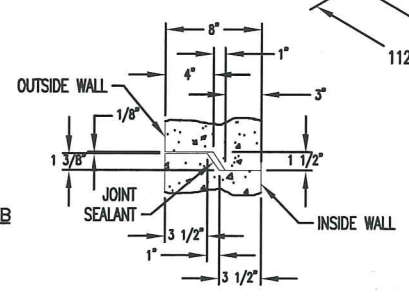

JOINT DETAIL – WALL

MINIMUM EXCAVATION SIZE:
10'–4" x 18'–4" x DEPTH REQ'D.

JENSEN PRECAST

AUTOCAD 2005

K816X–FV84–12LACOLA
PER LADWP SPEC. H–202 G–1 11–15–12

APPROVED
SEP 17 2015
MPM

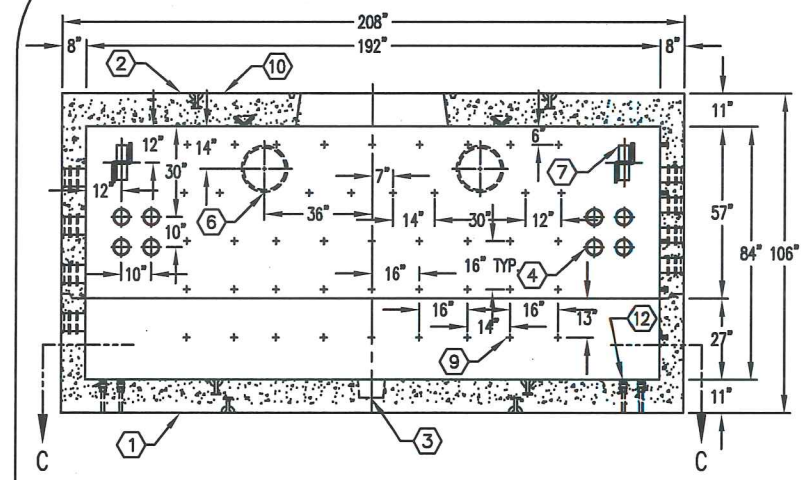

SECTION A–A

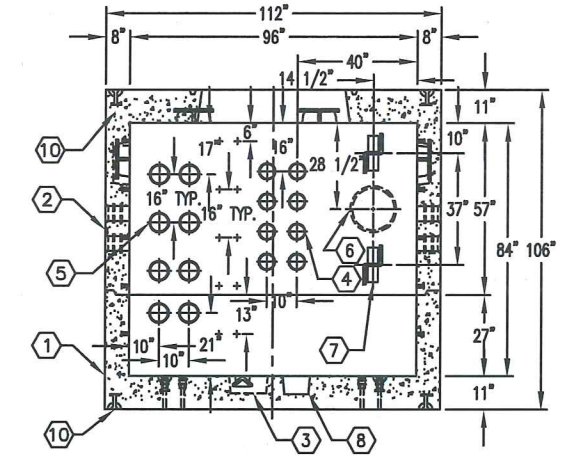

SECTION B–B

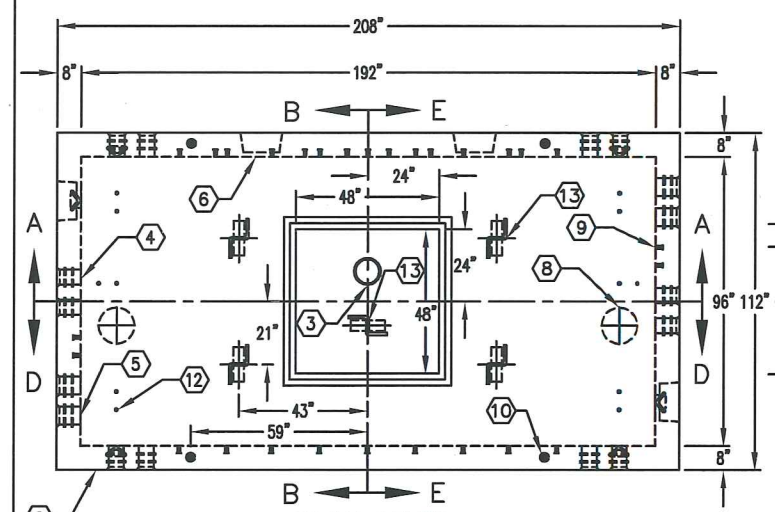

PLAN VIEW

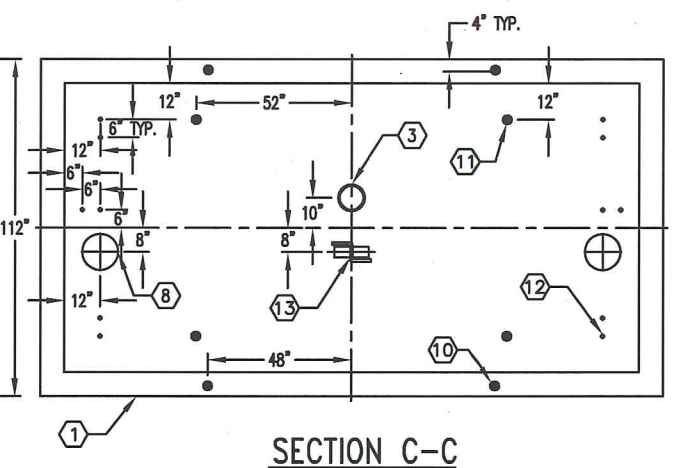

SECTION C–C

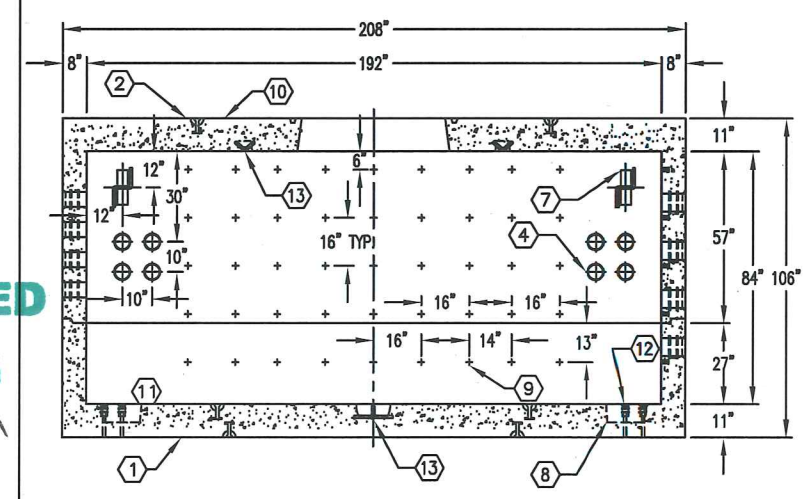

SECTION D–D

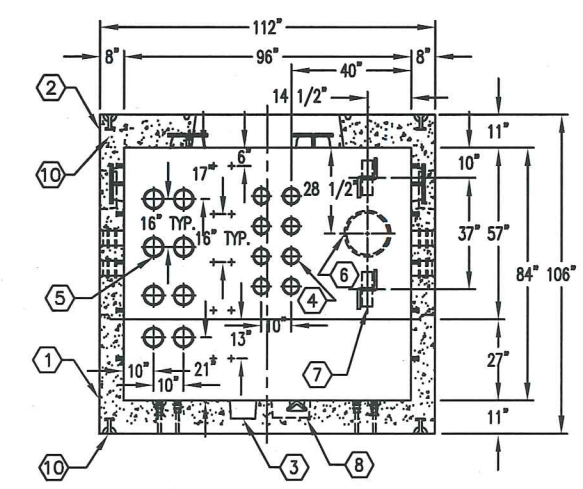

SECTION E–E

STOCKPILE – JENSEN PRECAST
CITY OF LOS ANGELES INSPECTION
REQUIRED WO# C0034604

JENSEN PRECAST

#	DATE	DESCRIPTION	BY
C	12–08–14	REV FLOOR PULL IRON TO SS; REV CEILING PULL IRON	JBH
D	09–16–15	ADD JENSEN W.O. #	EO

K816X–FV84–12LACOLA
PER LADWP SPEC. H–202 G–1 11–15–12