9'-6" x 12'-0" TRANSFORMER 'G1' PAD W/8'-0" x 10'-0" 'G3' VAULT x 54" DEEP

MATERIAL LIST

ITEM	PART NO.	DESCRIPTION	CAGE NO./ LOCATE	WEIGHT/ MOUNT
1	SB810-L55-G3-12	8'-0" x 10'-0" x 55" LOWER SECTION 'G3'	CG-SB810-L55-G3-12	16,850 lbs
2	PD114144-T10-G1-12	9'-0" x 12'-0" TRANSFORMER PAD 10" THICK	CG-PD114144-T10-G1-12	10,650 lbs
3	SC3048-PAGV-12-VENT	(1) PIECE GALV. VENTED COVER NAME PLATE "LADWP" w/ 4-1/2" x 1-1/2" S.S.P.H. BOLTS (2)GALV. DROP HANDLES		139 lbs.
4	55-10-416	1/2" DIA. x 1 1/2" NC P35T OPEN BTM INSERT W/ CLEAN OUT HOLE	TRANSFORMER PAD	(4) TABLE
5	55-20-078	ERICO 500KCM BRASS GROUND PLATE (B1643Q) W/ 7/8" x 36" LONG INSULATED STRANDED COPPER WIRE, FOR DETAIL SEE DWG "GRND-PLATE-500KCMIL-12"	BOTTOM SECTION	(4) CORE
6	55-10-424	1/2" DIA. PLASTIC W/ SNAP INSERTS	TRANSFORMER PAD	(12) SURFACE
7	55-10-525	5/8" DIA. x 3 1/2" (NC THREAD LENGTH 1 5/8") ELECT. FX-5 FERRULE LOOP INSERT - (TIED TO REBAR)	TRANSFORMER PAD	(2) TABLE
8	55-30-52	5" DIA. TERMS	BOTTOM SECTION	(32) CORE
9	55-20-409	4 TON x 9 1/2" GALV. DOGBONE ANCHORS FOR HANDLING	BOTTOM SECTION	(4) SURFACE
10	55-20-404	4 TON x 4-3/4" GALV. DOGBONE ANCHORS FOR HANDLING	TRANSFORMER PAD BOTTOM SECTION	(4) TABLE, (4) SURFACE (4) CORE
11	55-35-03	7/8" DIA. x 3-3/8" GALV. RECESSED PULL IRON	BOTTOM SECTION	(6) CORE
12	HOLE	1 1/4" DIA. HOLE FOR 3/4" DIA. THREADED BOLT	TRANSFORMER PAD	(6) TABLE
13	55-10-630	3/4" DIA. x 2 7/8" NC THREADED P-56T INSERT	BOTTOM SECTION TRANSFORMER PAD	(12) CORE (3) SHELL
14	55-21-110	1 5/8" x 1 5/8" x 110" LONG GALV. UNISTRUT CAST-IN	TRANSFORMER PAD	(3) TABLE

NOTES:

- VAULT DESIGNED IN ACCORDANCE WITH L.A.D.W.P. SPEC C721, ACI 318 & ASTM C857, USING 5,500 PSI CONCRETE AND ASTM A-706 GR.60 STEEL REINFORCEMENT PER CALCS. #33790.
- COVER DESIGNED FOR PARKWAY (300 PSF) LOADING PER CALC. #32215.
- CONCRETE MIX USED IN POURING THIS PRODUCT SHALL USE FLY ASH AND DCI AS AN ADMIXTURE.
- EACH CONCRETE SECTION SHALL BE MARKED ON THE INSIDE & OUTSIDE WITH "JENSEN PRECAST", THE DESIGNATION "DWP/FA-CN" or "DWP/F-CN-SC" IF SCC MIX USED, AND THE DATE OF POUR.
- EACH CONCRETE SECTION SHALL HAVE CAST-IN ON THE INSIDE "JENSEN", INSIDE "JENSEN", THE YEAR, AND THE DESIGNATION "FA-CN" or "F-CN-SC" IF SCC MIX USED.
- VAULT TO BE PLACED ON A MIN. 6" COMPACTED CRUSHED ROCK 1", GRADE A or CONCRETE AGGREGATE NO. 3 GRADE B (SSPWC, SUBSECTIONS 200-1.2 & 200-1.4), FOR EASE OF INSTALLATION AND EVEN LOAD DISTRIBUTION.

SPECIAL HANDLING NOTE: THIS CONCRETE PRODUCT IS DESIGNED TO BE LIFTED WITH 4 (FOUR) EQUALLY LOADED RIGGINGS LEGS MIN. 60° SLING ANGLE, MEASURED FROM HORIZONTAL.

NOTE: GROUNDING HARDWARE NOT INCLUDED

MINIMUM EXCAVATION SIZE:
10'-0" x 12'-0" x DEPTH REQ'D.

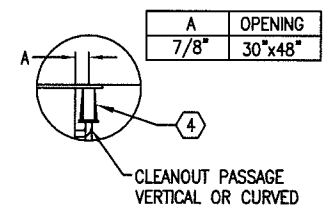

A	OPENING
7/8"	30"x48"

DETAIL A
INSERTS AROUND OPENING

THE FOLLOWING MATERIALS ARE TO BE SHIPPED LOOSE:

* UNISTRUT, BOLT-ON 72" N-200-SS GALV. (21-72-00), 2 REQ'D.
* SCREW, ¼" X 2" BUTT HD CAP 316SS (20-10-427), 10 REQ'D.
* WASHER, ½" FLAT 316SS (20-25-42), 10 REQ'D.
* ROD, ¾" X 15" 9NC THREAD 316SS W/ NUTS, LOCK & FLAT WASHERS (20-10-715SS), 6 REQ'D.
* ANGLE, 8 X 8 X ½" X 30"L W/ SLOTTED HOLES GALV. (15-40-04), 2 REQ'D.
* PLATE, 1" X 10" X 30" W/ ½" WELDED FLAT BARS GALV., SLOTTED HOLES (15-40-02), 2 REQ'D.
* BOLT, ¾" X 3" 10NC HEX HD 316SS (20-10-661), 6 REQ'D.
* WASHER, ¾" FLAT 316SS (20-25-64), 6 REQ'D.
* WASHER, ¾" SINGLE COIL LOCK 316SS (20-25-65), 6 REQ'D.
* PLATE, 7'-8" X 8"W X ¼"THK W/ SLOTS, GALV (15-40-03), 1 REQ'D.
* BOLT, 5/8" X 1 1/2" SS W/ CAP WASHER (20-10-511), 2 REQ'D.

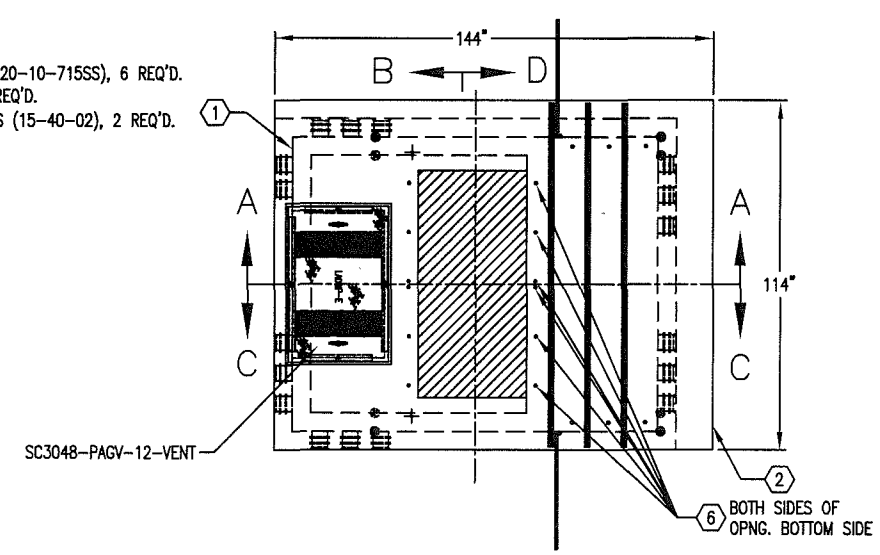

JENSEN PRECAST

AUTOCAD 2005

K9612-SB54-G3-12

PER L.A.D.W.P. SPEC UB721-35 05-21-13

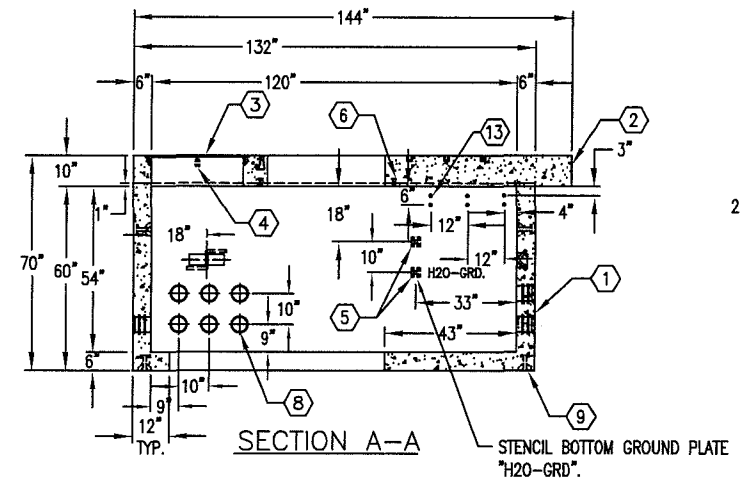

SECTION A-A

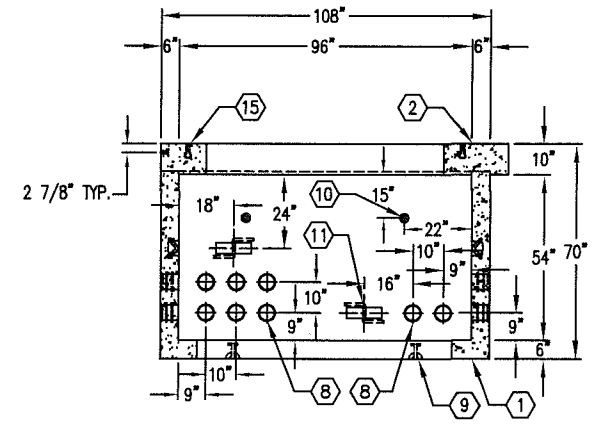

SECTION B-B

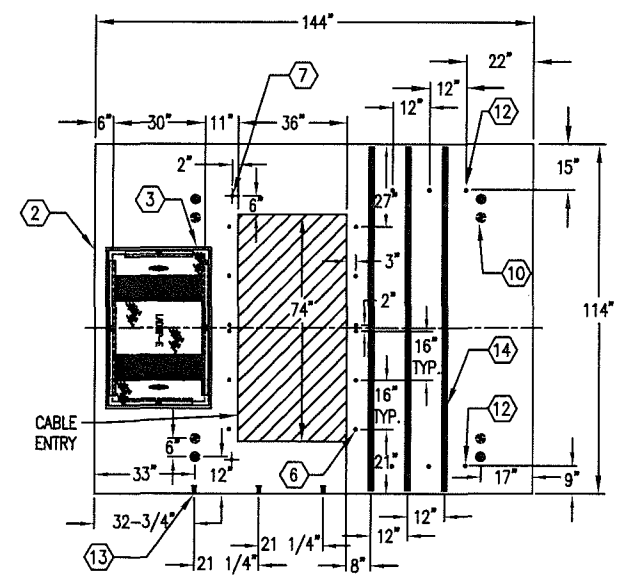

PLAN VIEW OF TRANSFORMER PAD

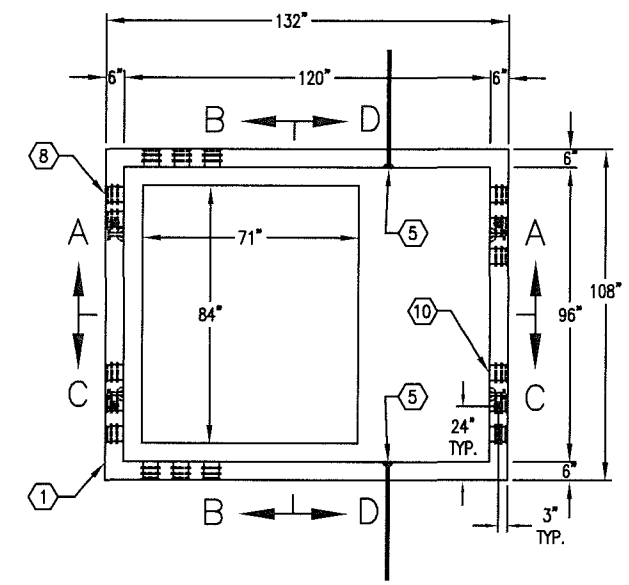

PLAN VIEW (VAULT ONLY)

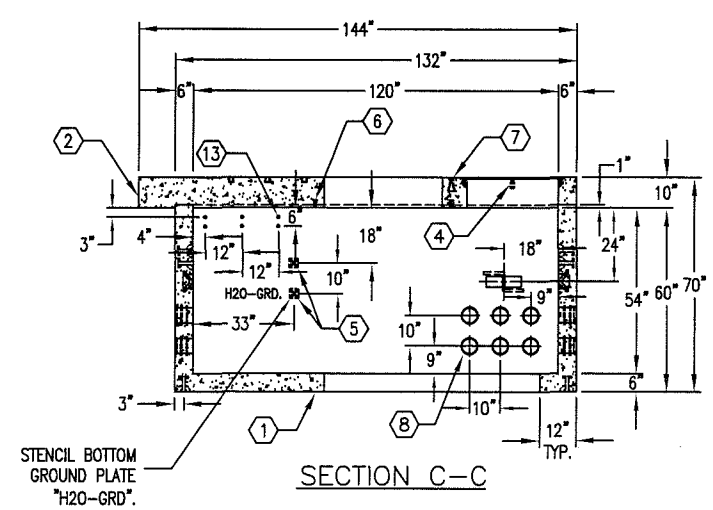

SECTION C-C

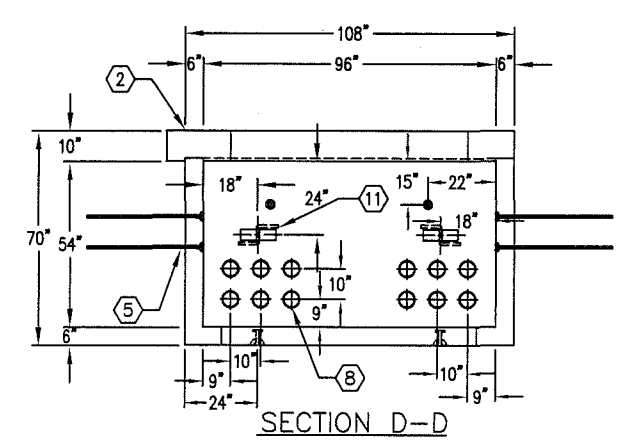

SECTION D-D

JENSEN PRECAST

#	DATE	DESCRIPTION	BY
E	10-20-15	REV ITEM 5 TO 4" THRU HOLE PER LADWP	EO
F	06-01-16	REV PER: DEL. GRND HOLE, ADD GRND PL W/WIRE; ADD DETAIL A	EO

K9612-SB54-G3-12

PER L.A.D.W.P. SPEC UB721-35 05-21-13

C:\Vault\Fontana\Standard Dwgs\Sneet\ladwp (12)\K9612-SB54-G3-12.dwg 6/23/2016 9:33:43 AM enorc4