BILL OF MATERIALS

ITEM	PART NUMBER	DESCRIPTION	QTY	MOUNT	WEIGHT (lbs)
1	TV78-E60-N-11	7'-0" X 8'-0" X 5'-0" END SECTION	2		18894
2	TV78-C96-N-11	7'-0" X 8'-0" X 8'-0" CENTER SECTION	1		21920
3	VN45-T8-11S	COVER SLAB, 4'-0" X 5'-0" X 0'-8" W/30" DIA. RING	1		1730
4	VN45-R6	4'-0" X 5'-0" X 0'-6" RISER	2		1167
5	VN45-N12-11	NECK, 4'-0" X 5'-0" X 1'-0" EDISON	1		1710
6	SC13-SUMP	SUMP COVER FOR 13"SUMP(15"OD)GALV DIA PLATE	1	CENTER SECTION	
7	55-30-52	TERMINATOR, 5" DIA. BLK W/SEAL T5001 MA	48	END SECTION	
8	22-30-01	1" PVC PIPE WITH CAP SCH 40 6"L	4	END SECTION	
9	55-30-80	10" DIA. PLASTIC VENT COUPLER W/CAP	6	END SECTION	
10	55-35-06	PULL IRON, 7/8" x 6" GALV.	18	END/SLAB SECTION	
11	55-10-425	1/2" THREADED BRONZE GROUND INSERT WELD TO REBAR "GRD" SHOULD BE STENCILED IN RED LETTERS	10	END/CTR SECTION	
12	55-10-422	INS THRD FRL LOOP .5X2.75 ZN FX-5	4	END SECTION	
13	55-10-424	INSERT,1/2"PLASTIC W/SNAP IMPERIAL I5000	41	END/CTR SECTION	
14	55-10-855	INSERT, 1" X 5" DBL COIL GALV.	1	CENTER SECTION	
15	55-10-850	INSERT, 1"x5 1/2" COIL GALV.	10	END/CTR SECTION	
16	BRK-TV	BRACKET TUNNEL VAULT (HBRKT3003) GALV	16	END/CTR SECTION	
17	55-11-336AS	EMBEDDED S.S. ANGLE 3"x3"x1/4"-6" LONG W/3 ANCHORS	4	CENTER SECTION	
18	20-10-461	BOLT, 1/2"x6" 'J' GALV.	4	SHIPS LOOSE	
19	18-10-18	CABLE RACK, 18 HOLE GALV. W/TABS	10		
20	20-20-60	NUT, 3/4" HEX COIL POST YELLOW DIP	24	SHIPS LOOSE	
21	20-10-618	BOLT, 3/4" X 18" COIL POST YELLOW DIP	8	SHIPS LOOSE	
22	20-25-61	WASHER, 3/4" CUT PLATED	8	SHIPS LOOSE	
23	15-10-25	LADDER, 11' ED/LA GALV.	1	CENTER SECTION	
24	04-30-114	COVER 30" SWIVELOC "EDISON"	1		
25	20-10-610	BOLT, 3/4" X 10 1/2" COIL POST YELLOW DIP	4	SHIPS LOOSE	
26	20-30-06	PLUG, RUBBER PICKHOLE ED/LA C.I. COVER	1	SHIPS LOOSE	
27	20-10-422	BOLT, 1/2"x2 1/2" HEX HD SS A304	20		
28	20-25-44	WASHER, 3"x3"x1/2" W/7/8" HOLE GALV.	16	SHIPS LOOSE	
29	20-25-41	WASHER, 1/2" FLAT PLATED	20		
30	20-10-813	TURNBUCKLE CLEVIS-TO-CLEVIS 3/4 THREADED W/ 2 HEX NUTS (GALVANIZED)	4	SHIPS LOOSE	
31	20-10-811	5/8" GALV. SHACKLE WITH 3/4" PIN W/ COTTER PINS	4	SHIPS LOOSE	
32	20-10-810C	1/2" GALV. CHAIN, 7-1/2 FT LONG, GRADE 30 (FIELD CUT)	4	SHIPS LOOSE	

A

A

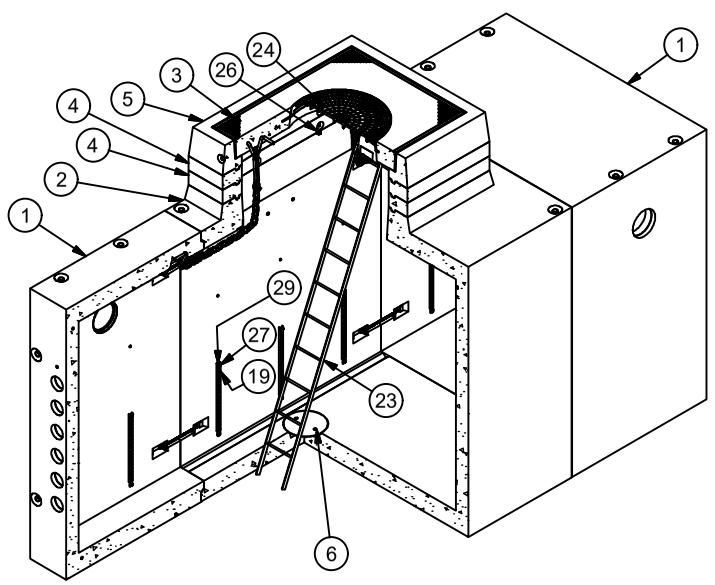

ISO VIEW

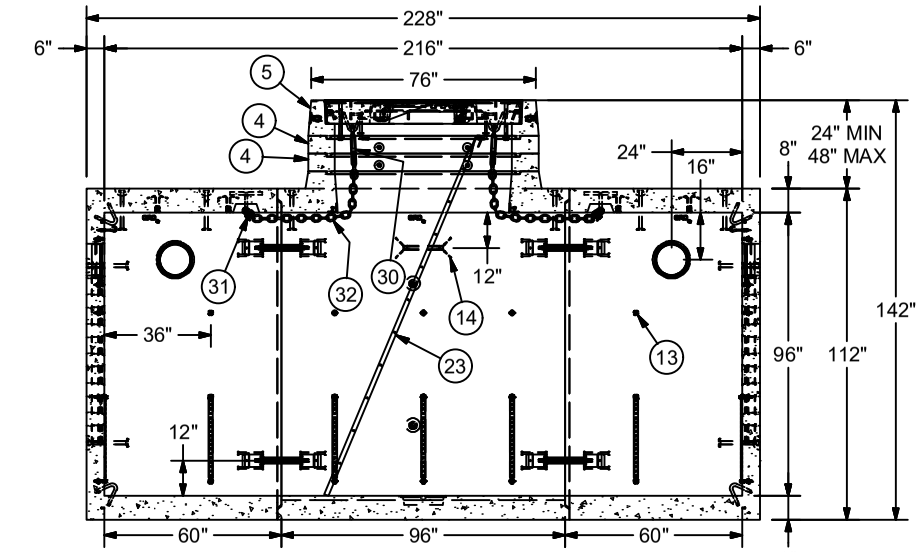

SECTION A-A

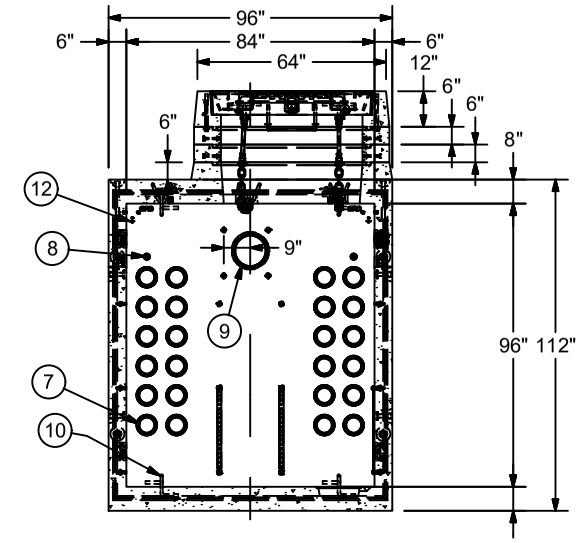

SECTION B-B

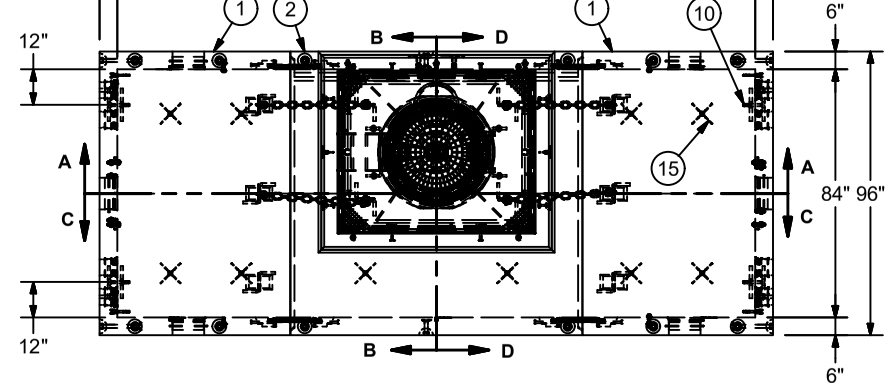

PLAN VIEW

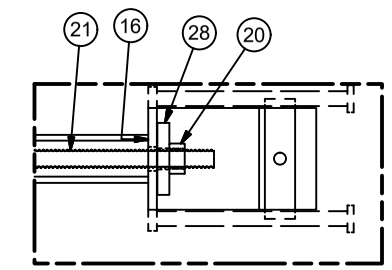

DETAIL E
BOLT-UP DETAIL

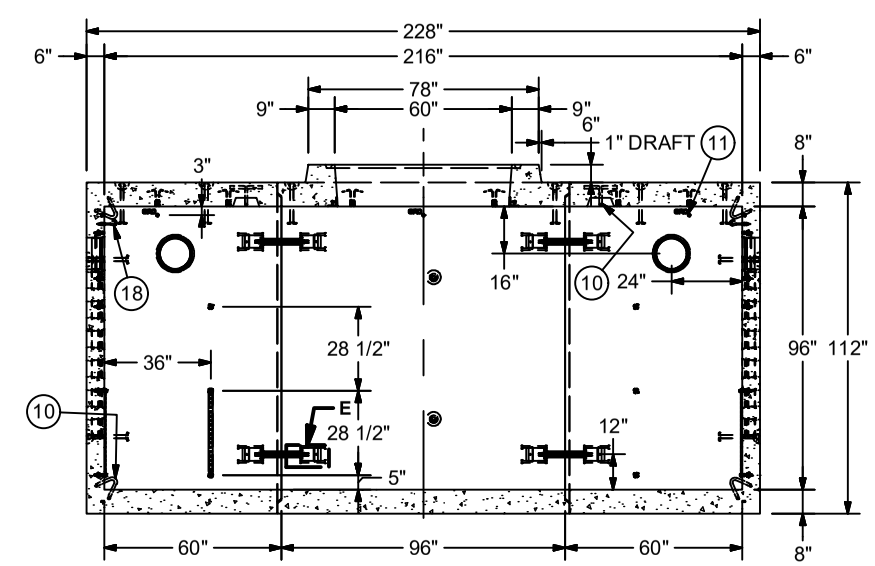

SECTION C-C

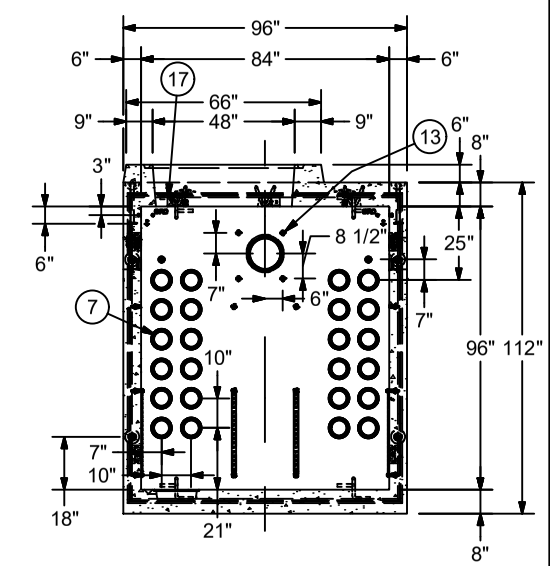

SECTION D-D

NOTES:

- DESIGNED IN ACCORDANCE WITH AASHTO H-20-44 TRAFFIC BRIDGE LOADING USING 5,500 PSI COMPRESSIVE STRENGTH CONCRETE AND 60,000 PSI YIELD STRENGTH ASTM A-706 STEEL REINFORCEMENT PER CALCS. #31658.
- COVER DESIGN FOR TRAFFIC LOADING.
- LIMIT OF COVER OVER ROOF SECTION IS 1'-6" TO 4'-0".
- VAULT TO BE PLACED ON A MIN. 6" BASE OF CRUSHER RUN FOR EASE OF INSTALLATION AND EVEN LOAD DISTRIBUTION.
- CONCRETE MIX USED IN POURING THIS PRODUCT SHALL USE FLY ASH AS AN ADMIXTURE.
- FINISH COATING: ALL INTERIOR WALLS AND CEILING SHALL BE PAINTED WHITE.
- ALL PARTS TO BE STENCILED: MFG DATE / JOB NUMBER / PRODUCT ID / WEIGHT.
- MINIMUM EXCAVATION SIZE: 9'-0" X 20'-0" DEPTH REQ'D.

SPECIAL HANDLING NOTE: THIS CONCRETE PRODUCT IS DESIGNED TO BE LIFTED WITH 4 (FOUR) EQUALLY LOADED RIGGINGS LEGS MIN. 60° SLING ANGLE, MEASURED FROM HORIZONTAL.

REVISION HISTORY

REV	DATE	DESCRIPTION	BY
A	3/15/2018	REVISED CHAIN FROM 20-10-810 TO 20-10-810C, 55-11-336 TO 55-11-336AS	RR

JENSEN PRECAST EST. 1968
825 STENERI WAY
SPARKS, NV 89431
WWW.JENSENPRECAST.COM

©2016 Jensen Precast- All rights reserved. All materials appearing as Jensen Precast documents and the like are proprietary work product and are protected under U.S. copyright and other laws. Unless in conjunction with business conducted with Jensen Precast, any use of Jensen Precast work product without express, written consent is prohibited, and recipient is prohibited from distributing any and all work product to non-approved third parties under penalty of civil action.

VAULT DESC: 7'-0" X 8'-0" FLAT WALL TUNNEL VAULT X 18'-0" LONG

PART ID: K78-TV18-N-11TCOMP	JOB NO:
DATE CREATED: 1/9/2018	DATE MODIFIED: 7/20/2018
DRAWN BY: RRAMOS	SHEET: 1 OF 1
REV: A	

102

AGENCY: EDISON	AGENCY SPEC: UGS VA 411	MANUFACTURING SPEC: ASTM C858

FILENAME: K78-TV18-N-11TCOMP.idw

K78-TV18-N-11TCOMP.idw