8'-0" x 9'-4" DUCTED TUNNEL VAULT x 22'-0" LONG

NOTES:

- VAULT DESIGNED IN ACCORDANCE WITH AASHTO H-20-44 TRAFFIC BRIDGE LOADING USING 5,500 PSI [37.92MPa] COMPRESSIVE STRENGTH CONCRETE AND 60,000 PSI [413.2MPa] YIELD STRENGTH ASTM A-706 STEEL REINFORCEMENT. 96" EXTENSION SECTION PER CALCS. #31893. 96" INTERMEDIATE SECTION AND 36" END SECTIONS PER CALCS. #32152.
- VAULT TO BE PLACED ON 6" BASE OF CRUSHER RUN FOR EASE OF INSTALLATION AND EVEN LOAD DISTRIBUTION.
- LIMIT OF COVER OVER ROOF SECTION IS 1'-0" TO 4'-0".
- CONCRETE MIX USED IN POURING THIS PRODUCT SHALL USE FLY ASH AND DCI AS AN ADMIXTURE.
- EACH CONCRETE SECTION SHALL BE MARKED ON THE INSIDE & OUTSIDE WITH "JENSEN PRECAST", THE DESIGNATION "DWP/FA-CN.", AND THE DATE OF POUR.
- EACH CONCRETE SECTION SHALL HAVE CAST-IN ON THE INSIDE "JENSEN", THE YEAR, AND THE DESIGNATION "FA-CN".
- NO SHARP OR ROUGH EDGES ON THE TERMINATORS ENTERING THE VAULT.

THE FOLLOWING MATERIAL TO BE SHIPPED WITH VAULT:

(a) 7/8" x 1 3/4" CONSEAL GASKET (135 FEET REQUIRED).
(b) 1 5/8" GALVANIZED UNISTRUT x 92" LONG (06-2090) W/(6) 1/2"-13NC x 1 1/2" ROUND HEAD SLOTTED PLATED MACHINE SCREWS & (6) 1/2" PLATED WASHERS (6 REQUIRED).
(c) 1 5/8" x 1 5/8" GALVANIZED UNISTRUT x 38" LONG (06-2086) W/ (3) 1/2"-13NC x 1 1/2" ROUND HEAD SLOTTED PLATED MACHINE SCREWS & (3) 1/2" PLATED WASHERS (2 REQUIRED).
(d) 1 5/8" x 1 5/8" GALVANIZED UNISTRUT x 32" LONG (06-2085) W/(2) 1/2"-13NC x 1 1/2" ROUND HEAD SLOTTED PLATED MACHINE SCREWS & (2) 1/2" PLATED WASHERS (6 REQUIRED).
(e) 1 5/8" x 1 5/8" GALVANIZED UNISTRUT x 22" LONG (06-2084) W/(2) 1/2"-13NC x 1 1/2" ROUND HEAD SLOTTED PLATED MACHINE SCREWS & (2) 1/2" PLATED WASHERS (6 REQUIRED).
(f) 1/2" x 1 1/4" HEX HEAD S.S. BOLT (4 REQUIRED).
(g) 3/4" x 20' COIL PYD (12 REQUIRED).
(h) 7/8" x 1/2" x 3" WASHER GALVANIZED (24 REQUIRED).
(i) 3/4" HEX COIL NUT PYD (24 REQUIRED).
(j) LADDER HANGER ASSEMBLY (1 REQUIRED).
(k) I-3382 LADDER 12' (1 REQUIRED).

1. TV894X-C96-171-12, 96" INTERMEDIATE SECTION (CG-894X-C96-171-12). WT. 44,750 lbs.
2. TV894X-R96-171-12, 96" EXTENSION SECTION (CG-894X-R96-171-12). WT. 48,450 lbs.
3. TV894X-E36A-171-12, 36" END SECTION (CG-894X-E36A-171-12). WT. 35,000 lbs.
4. TV894X-E36B-171-12, 36" END SECTION (CG-894X-E36B-171-12). WT. 35,000 lbs.
5. 8" DIA. x 9" DIA. SUMP x 5" DEEP (5000-346). LOCATE AS FOLLOWS: INTERMEDIATE SECTION (1) CORE MTD.
6. 24" x 82" DUCTED KNOCKOUT x 12" DEEP (5000-528). DRAFT AS FOLLOWS: T=1", S1=7", S2=7", B=7". LOCATE AS FOLLOWS: END SECTION (1) EACH CORE MTD.
7. 18" x 18" KNOCKOUT x 6" DEEP (5000-351). DRAFT 1" TYPICAL ALL SIDES. LOCATE AS FOLLOWS: END SECTION (2) EACH CORE MTD.
8. 14" DIA. x 15" DIA. VENT KNOCKOUT x 5" DEEP (5000-361). LOCATE AS FOLLOWS: INTERMEDIATE SECTION (2) CORE MTD., END SECTION (2) EACH CORE MTD.
9. 5" DIA. CONTERM (5563 G). LOCATE AS FOLLOWS: END SECTION (30) EACH SURFACE MTD. (55-30-52).
10. 7/8" DIA. x 4 1/2" GALVANIZED PULL IRON WITH LEGS (05-2140). LOCATE AS FOLLOWS: INTERMEDIATE SECTION (1) CORE MTD.; END SECTION (2) EACH CORE MTD. (SPI-45LA)
11. 1 1/2" GALVANIZED COIL THREADED INSERT. LOCATE AS FOLLOWS: END SECTION (2) EACH CORE MTD. (55-10-900)
12. 1/2" PLASTIC INSERT. LOCATE AS FOLLOWS: INTERMEDIATE SECTION (38) CORE MTD.; EXTENSION SECTION (38) CORE MTD.; END SECTION (17) EACH CORE MTD. (55-10-424)
13. 12" DIA. KNOCKOUT. LOCATE AS FOLLOWS: END SECTION (2) EACH CORE MTD.
14. 950 BOLT-UP CASTING (950-118) W/ RECESS (950-214). LOCATE AS FOLLOWS: INTERMEDIATE SECTION (8) CORE MTD.; EXTENSION SECTION (8) CORE MTD.; END SECTION (4) EACH CORE MTD. (BRK-TV)
15. 8 TON x 13 3/8" GALVANIZED RISS FOR HANDLING. LOCATE AS FOLLOWS: CENTER SECTION (6) SHELL MTD.; EXTENSION SECTION (12) SHELL MTD.; END SECTION (2) EACH SHELL MTD.; (4) EACH SURFACE MTD. (55-20-813)
16. 2" DIA. TERMS W/1" DIA. GROUND ROD KNOCKOUT. LOCATE AS FOLLOWS: END SECTION (6) EACH CORE MTD. (55-30-20), (55-30-21)
17. 7/8" SS PULL IRON (SPI-45LA-SS-316). LOCATE AS FOLLOWS: INTERMEDIATE SECTION (1) CORE MTD.

MINIMUM EXCAVATION SIZE:
11'-0" x 26'-10" x DEPTH REQ'D.

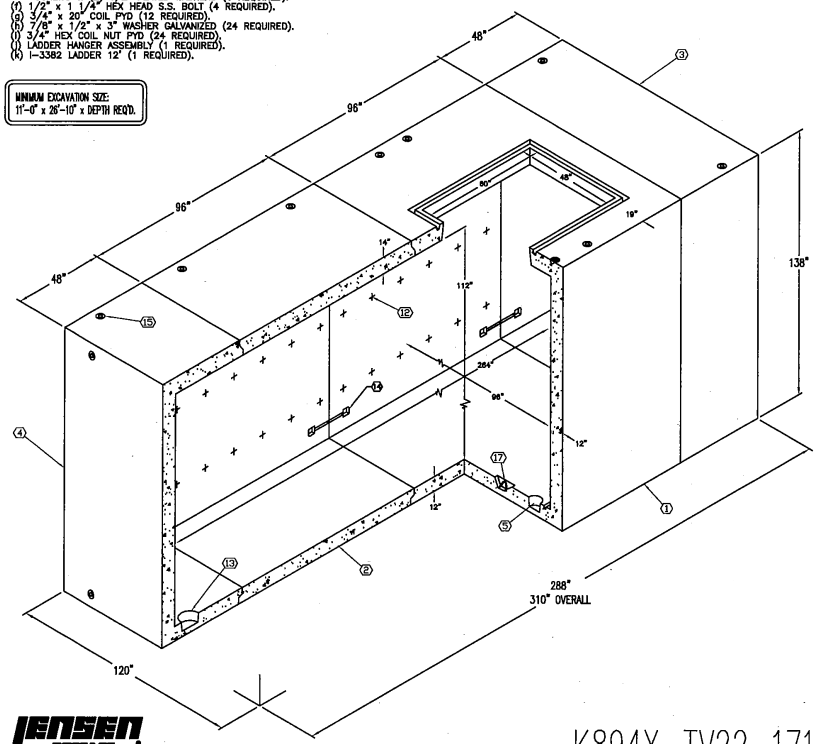

JENSEN PRECAST

AUTOCAD 2005

K894X-TV22-171-12

PER L.A.D.W.P. SPEC. H-171, G-4, R33

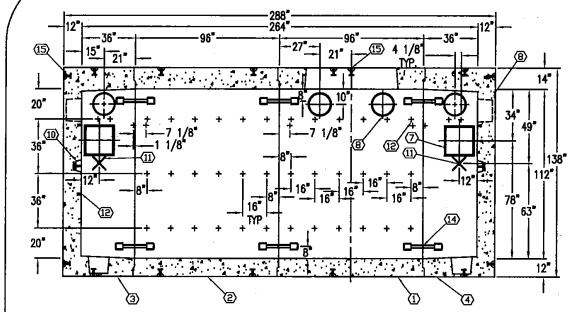

SECTION A-A

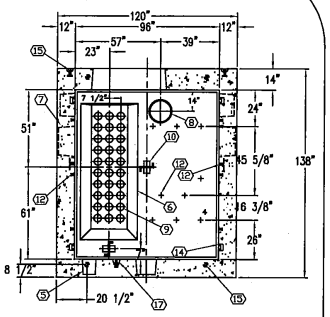

SECTION B-B

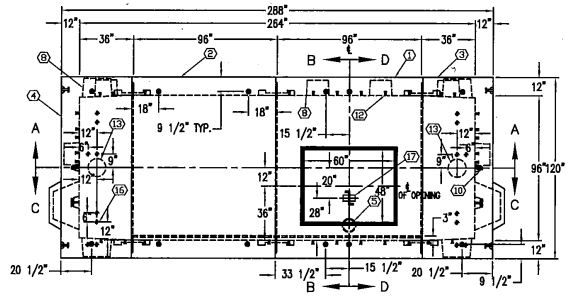

PLAN VIEW

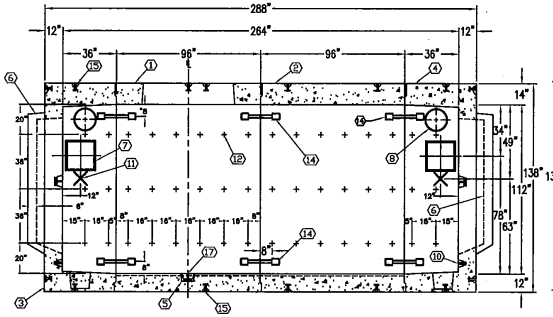

SECTION C-C

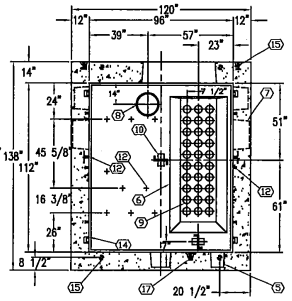

SECTION D-D

JENSEN PRECAST

DATE	DRAWN BY	CHECKED BY
01-06-15	J.SOENDERBY	

REVISION

#	DATE	DESCRIPTION	BY	CHK
C	02/27/15	REMOVE (2) ITEM 8 FROM SECT C-C	ED	
D	09-08-15	REV TOP SLAB FROM 12" TO 14" PER FORM DIM (PER PLANT)	ED	

K894X-TV22-171-12

PER L.A.D.W.P. SPEC. H-171, G-4, R33