7'–0" x 18'–0" FLAT WALL VAULT x 9'–0" DEEP – LRFD

MATERIAL LIST

ITEM	PART NO.	DESCRIPTION	CAGE NO./ LOCATE	WEIGHT/ MOUNT
1	UV718-B54-12	54" BOTTOM SECTION	CG-718-B54-12	45,350 lbs
2	UV718-T54-12	57" TOP SECTION	CG-718-T54-12	47,300 lbs
3	KNOCK OUT	8" x 9" DIA. SUMP x 5" DEEP	BASE SLAB	(1) CORE
4	55-30-53	5" DIA. DOUBLE MEMBRANE TERM	BOTTOM SECTION TOP SECTION	(4) SHELL (32) SHELL
5	55-30-61	6" DIA. DOUBLE MEMBRANE TERM	BOTTOM SECTION TOP SECTION	(4) SHELL (12) SHELL
6	KNOCK OUT	14"x 15" VENT K.O. x 7" DEEP	TOP SECTION BOTTOM SECTION	(4) CORE (2) CORE
7	SPI-45LA	7/8" DIA x 4 1/2" GALVANIZED PULL IRON WITH LEGS	BOTTOM SECTION TOP SECTION	(2) CORE (6) CORE
8	KNOCK OUT	12" DIA. K.O. x 10" DEEP FOR ANODE EQUIPMENT	BOTTOM SECTION	(2) CORE
9	55-10-424	1/2" PLASTIC INSERT	BOTTOM SECTION TOP SECTION	(52) TABLE (74) TABLE
10	55-20-813	8 TON 13 3/8" RISS LIFTER	BOTTOM & TOP SECTION	(4) SURFACE
11	55-20-804	8 TON 4 3/4" RISS LIFTER	BOTTOM SECTION	(8) CORE
12	55-30-20	2" DIA. TERM GROUND ROD	BOTTOM SECTION	(12) CORE
13	55-35-06SS-316	7/8" DIA x 6" STAINLESS STEEL PULL IRON	TOP SECTION BOTTOM SECTION	(4) CORE (1) CORE

NOTES:

- VAULT DESIGNED IN ACCORDANCE WITH LRFD HL–93 TRAFFIC WHEEL LOADS PER AASHTO LRFD DRIDGE DESIGN SPECIFICATIONS 4TH EDITION WITH CALTRANS 2010 AMMENDMENTS AND THE LOS ANGELES CITY BUREAU OF ENGINEERING STANDARD PLAN S–601–3, OR LASTEST EDITION, AND MANUAL PART H USING 5,500 PSI [37.92MPa] COMPRESSIVE STRENGTH CONCRETE AT 28 DAYS AND 60,000 PSI [413.2MPa] YEILD STRENGTH ASTM A–706 STEEL REINFORCEMENT PER CALCS. #33305.
- SATURATED SOIL CONDITIONS AT 3'–0" BELOW GRADE
- DESIGN ASSUMES 120 lb/ft^3 SOIL DENSITY.
- MINIMUM 1500 LB/FT^2 SOIL BEARING PRESSURE.
- DESIGN ASSUMES THAT LATERAL SOIL PRESSURE INCLUDES A 80 lb/ft^2 LIVE LOAD SURCHARGE
- THE DESIGN CALCULATIONS DO NOT INCLUDE ANY LATERAL OR SURCHARGE LOADS THAT ARE PRODUCED BY FOOTINGS OR FOUNDATIONS ADJACENT TO THE STRUCTURE. THIS SUBSTRUCTURE SHALL BE KEPT AT LEAST IN A 1 TO 1 RATIO AWAY FROM ALL FOOTINGS AND FOUNDATIONS, UNLESS THE ENGINEER OF RECORD EXPRESSES THE ACCEPTANCE OF SUCH DESIGN IN WRITING.
- VAULT TO BE PLACED ON A MIN. 6" BASE OF CRUSHER RUN FOR EASE OF INSTALLATION AND EVEN LOAD DISTRIBUTION. BASE MATERIAL IN ACCORDANCE WITH SECTION 200–2 OF THE STANDARD SPECIFICATIONS FOR PUBLIC WORKS CONSTRUCTION (GREENBOOK).
- INSTALLATION LIMITS OF THE ROOF SECTION ARE 1'–6" MIN. TO 4'–0" MAX. FROM FINISHED GRADE.
- CONCRETE MIX USED IN POURING THIS PRODUCT SHALL USE FLY ASH AND DCI AS AN ADMIXTURE. (86–10–12)
- NO SHARP OR ROUGH EDGES ON THE TERMINATORS ENTERING THE VAULT.
- K44–VN12–12T VAULT NECK AND COVER, AND NEENAH FOUNDRY R–1581 CAST IRON COVER TO BE USED WITH THIS VAULT.
- EACH CONCRETE SECTION SHALL BE MARKED ON THE INSIDE & OUTSIDE WITH " JENSEN PRECAST", THE DESIGNATION "DWP/FA–CN." OR "DWP\F–CN–SC" IF SCC MIX USED, AND THE DATE OF POUR.
- EACH CONCRETE SECTION SHALL HAVE CAST–IN ON THE INSIDE " JENSEN", THE YEAR, AND THE DESIGNATION "FA–CN" OR "F–CN–SC" IF SCC MIX USED.
- EACH CONCRETE PIECE TO BE STENCILED WITH ITS PART NO.
- DESIGN CRITERIA DOES NOT INCLUDE COOPER E–80 RAILROAD LOADS.
- APPROVAL FOR PRODUCT IS FOR THE USE IN PUBLIC RIGHT OF WAYS.

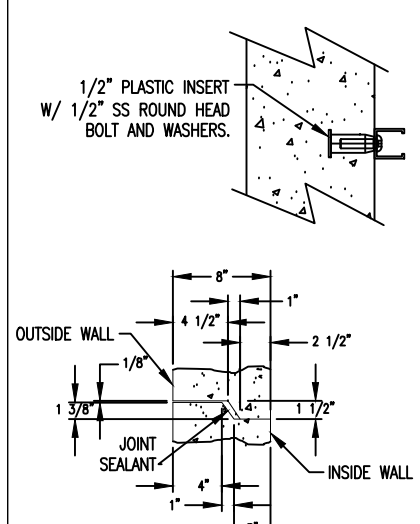

JOINT DETAIL

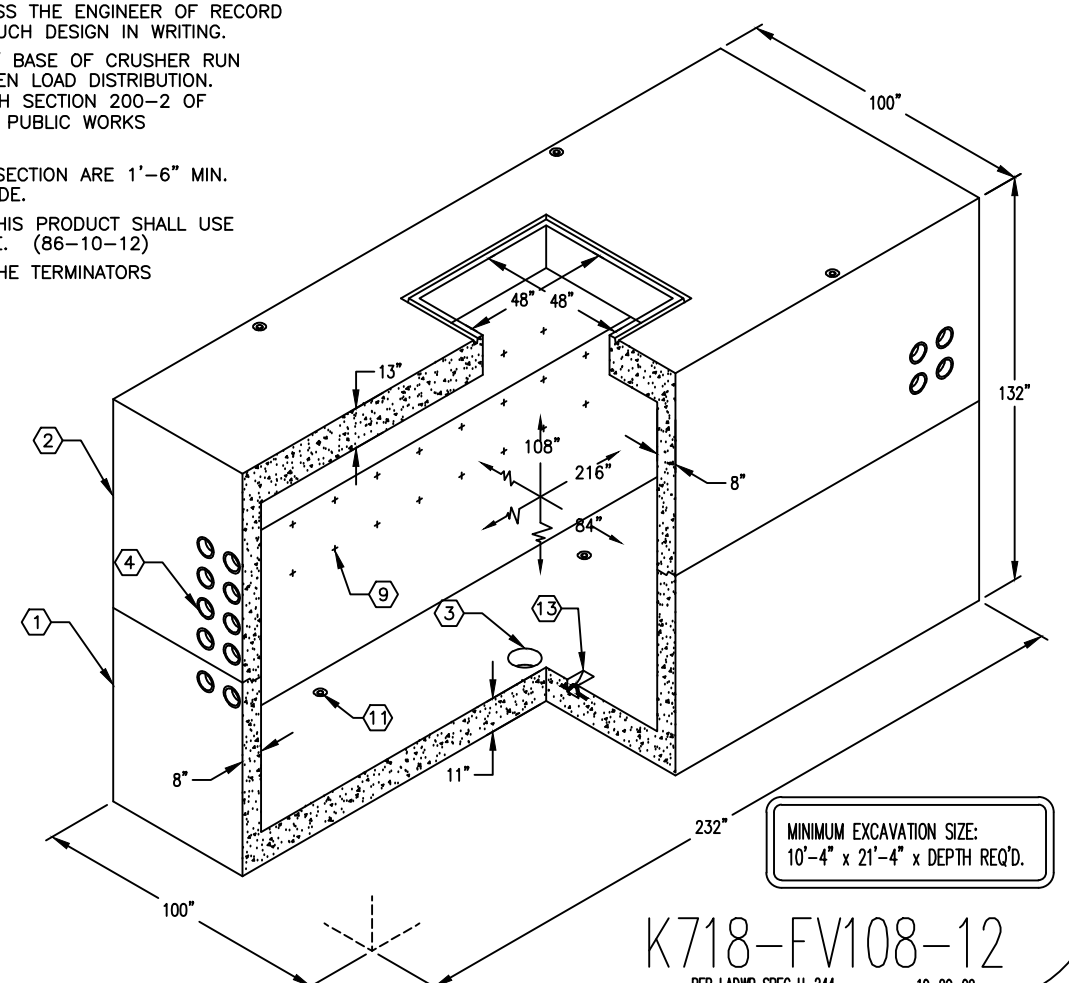

MINIMUM EXCAVATION SIZE:
10'–4" x 21'–4" x DEPTH REQ'D.

JENSEN PRECAST

AUTOCAD 2005

K718–FV108–12

PER LADWP SPEC H–244 10–20–09

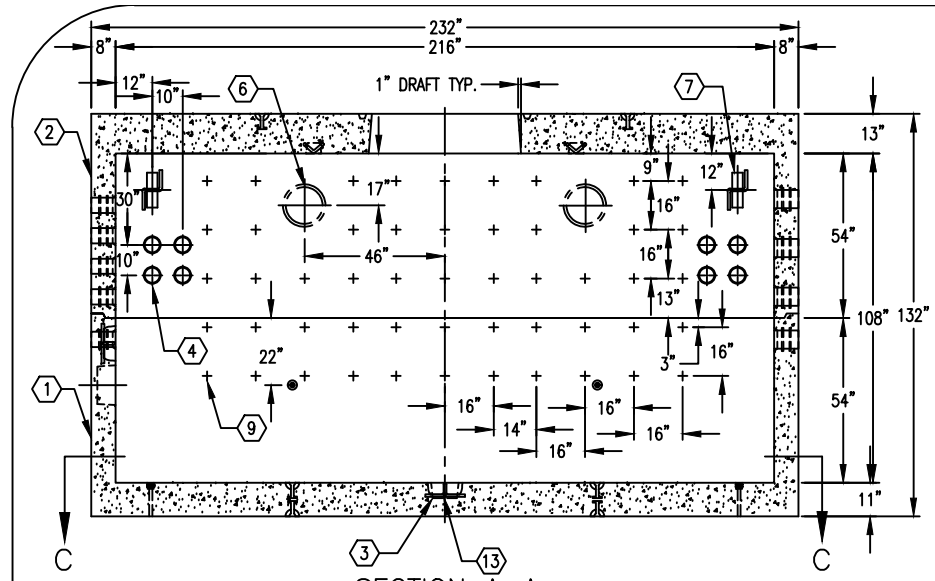

SECTION A–A

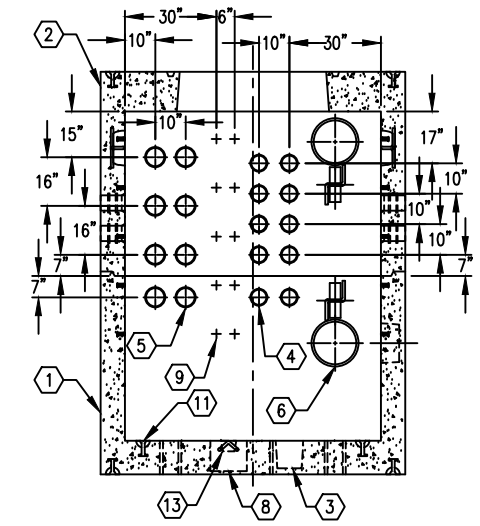

SECTION B–B

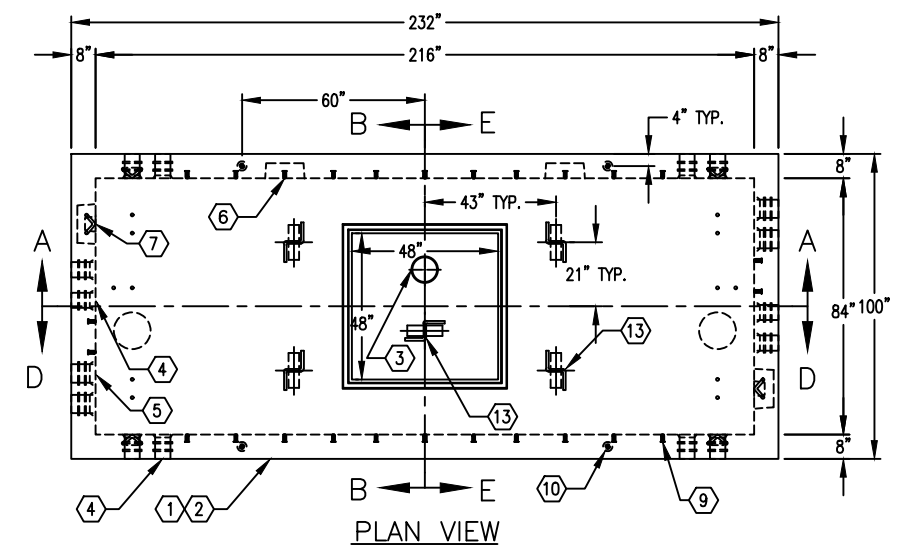

PLAN VIEW

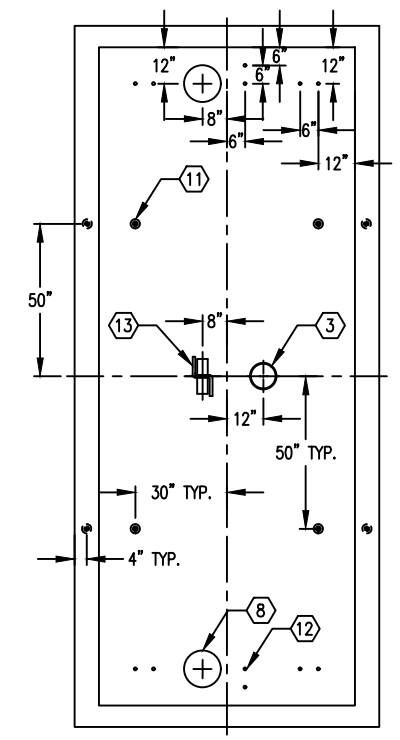

SECTION C–C

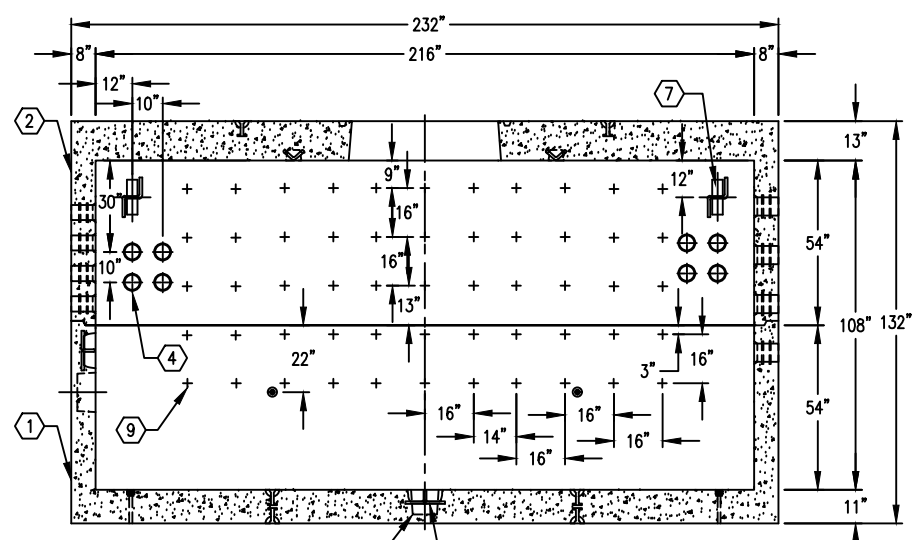

SECTION D–D

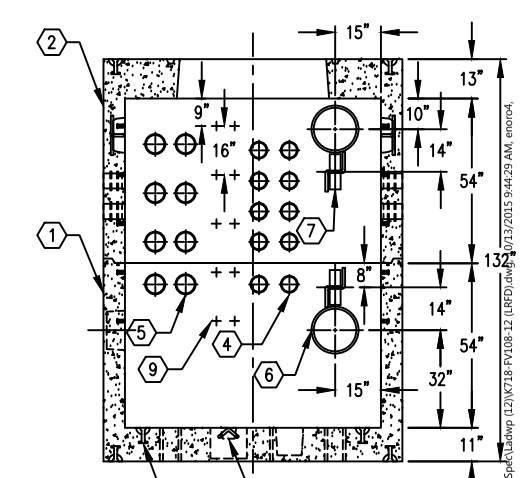

SECTION E–E

JENSEN PRECAST

#	DATE	DESCRIPTION	BY
C	05–15–15	REV NOTES, PT NO OF ITEM 13 & QTY OF ITEM 7, 13 PER LADWP SPEC	EO
D	10–07–15	INCREASE WALL THK TO 8" PER LABOE COMMENTS	EO

K718–FV108–12

PER LADWP SPEC H–244 10–20–09

C:\Users\Public\Documents\Standard Dwg\Spec\Ladwp 12ft\K718-FV108-12 (LRFD).dwg, 10/13/2015 9:44:29 AM, emorick, DWG TO PDF.pc3