BILL OF MATERIALS

ITEM	PART NUMBER	DESCRIPTION	QTY	MOUNT	WEIGHT (lbs)
1	TV78-INT-E60-A-N-11	7'-0" X 8'-0" X 5'-0" END SECTION INT.	1		14753
2	TV78-INT-E60-B-N-11	7'-0" X 8'-0" X 5'-0" END SECTION INT.	1		14753
3	TV78-INT-C96-N-11	7'-0" X 8'-0" X 8'-0" CENTER SECTION INT.	1		16783
4	VN45-T8-11S	COVER SLAB, 4'-0" X 5'-0" X 0'-8" W/30" DIA. RING	1		1730
5	VN45-R6	4'-0" X 5'-0" X 0'-6" RISER	2		1167
6	VN45-N12-11	NECK, 4'-0" X 5'-0" X 1'-0" EDISON	1		1710
7	SC13-SUMP	SUMP COVER FOR 13"SUMP(15"OD)GALV DIA PLATE	1	SHIPS LOOSE	
8	55-30-52	TERMINATOR, 5" DIA. BLK W/SEAL T5001 MA	24	END SECTION	
9	22-30-01	1" PVC PIPE WITH CAP SCH 40 6"L	2	END SECTION	
10	55-30-80	10" DIA. PLASTIC VENT COUPLER W/CAP	6	END SECTION	
11	55-35-06	PULL IRON, 7/8" x 6" GALV.	14	END/SLAB SECTION	
12	55-10-425	1/2" THREADED BRONZE GROUND INSERT WELD TO REBAR "GRD" SHOULD BE STENCILED IN RED LETTERS	10	END/CTR SECTION	
13	55-10-422	INS THRD FRL LOOP .5X2.75 ZN FX-5	32	END SECTION	
14	55-10-424	INSERT,1/2"PLASTIC W/SNAP IMPERIAL I5000	41	END/CTR/EXT. SECTION	
15	55-10-855	INSERT, 1" X 5" DBL COIL GALV.	1	CENTER SECTION	
16	55-10-850	INSERT, 1"x5 1/2" COIL GALV.	10	END/CTR SECTION	
17	BRK-TV	BRACKET TUNNEL VAULT (HBRKT3003) GALV	16	END/CTR SECTION	
18	55-10-525	INSERT, 5/8" FERRULE LOOP PLATED	76	BASE INT.	
19	55-11-336AS	EMBEDDED S.S. ANGLE 3"x3"x1/4"-6" LONG W/3 ANCHORS	4	CENTER SECTION	
20	20-10-461	BOLT, 1/2"x6" 'J' GALV.	4	SHIPS LOOSE	
21	18-10-18	CABLE RACK, 18 HOLE GALV. W/TABS	9		
22	20-20-60	NUT, 3/4" HEX COIL POST YELLOW DIP	24	SHIPS LOOSE	
23	20-10-618	BOLT, 3/4" X 18" COIL POST YELLOW DIP	8	SHIPS LOOSE	
24	20-25-61	WASHER, 3/4" CUT PLATED	8	SHIPS LOOSE	
25	15-10-25	LADDER, 11' ED/LA GALV.	1	CENTER SECTION	
26	04-30-114	COVER 30" SWIVELOC "EDISON"	1		
27	20-10-610	BOLT, 3/4" X 10 1/2" COIL POST YELLOW DIP	4	SHIPS LOOSE	
28	20-30-06	PLUG, RUBBER PICKHOLE ED/LA C.I. COVER	1	SHIPS LOOSE	
29	20-10-422	BOLT, 1/2"x2 1/2" HEX HD SS A304	18		
30	20-25-44	WASHER, 3"x3"x1/2" W/7/8" HOLE GALV.	16	SHIPS LOOSE	
31	20-25-45	WASHER, 1/2" FLAT SS A304	18		
32	20-10-813	TURNBUCKLE CLEVIS-TO-CLEVIS 3/4 THREADED W/ 2 HEX NUTS (GALVANIZED)	4	SHIPS LOOSE	
33	20-10-811	5/8" GALV. SHACKLE WITH 3/4" PIN W/ COTTER PINS	4	SHIPS LOOSE	
34	20-10-810C	1/2" GALV. CHAIN, 7-1/2 FT LONG, GRADE 30 (FIELD CUT)	4	SHIPS LOOSE	
35	55-35-09	PULL IRON, 7/8" x 9" FLAT GALV.	4	SHIPS LOOSE	

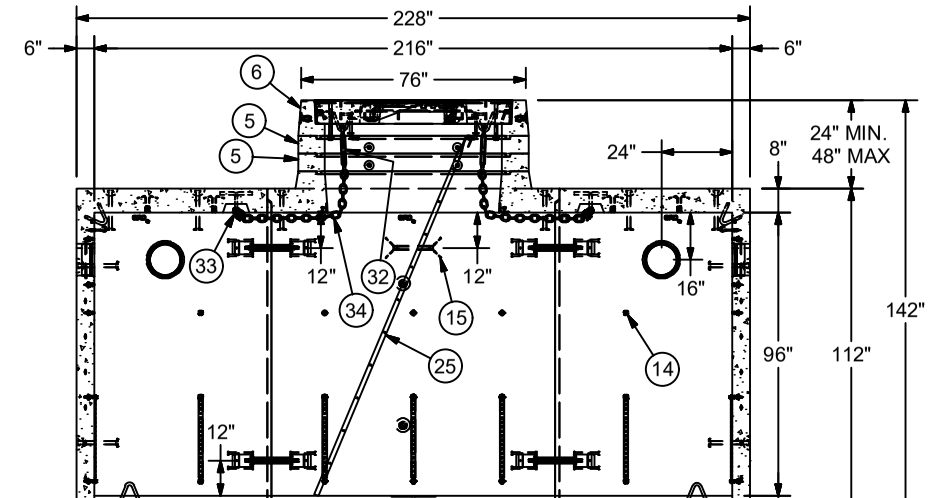

SECTION A-A

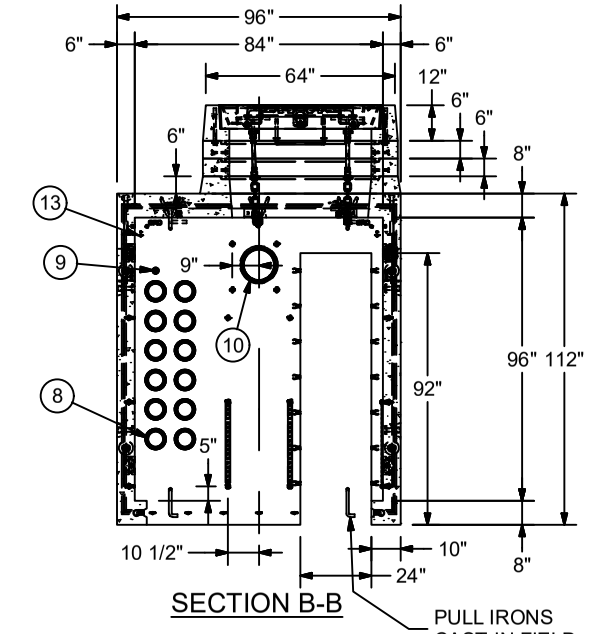

SECTION B-B

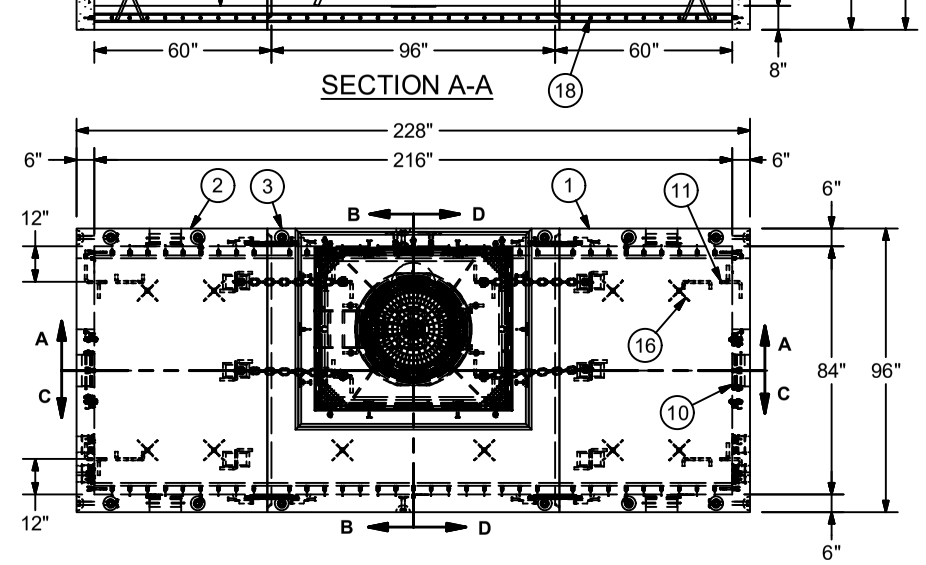

PLAN VIEW

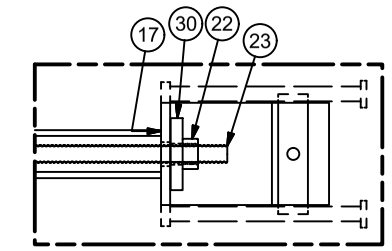

DETAIL E
BOLT-UP DETAIL

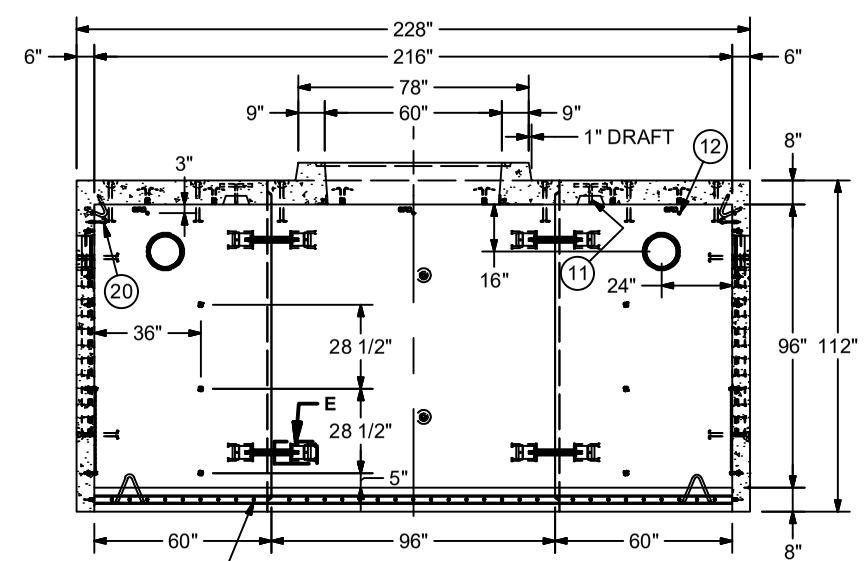

SECTION C-C

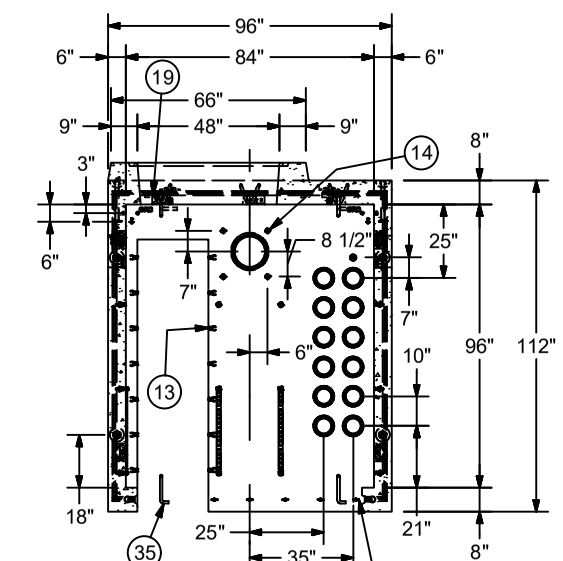

SECTION D-D

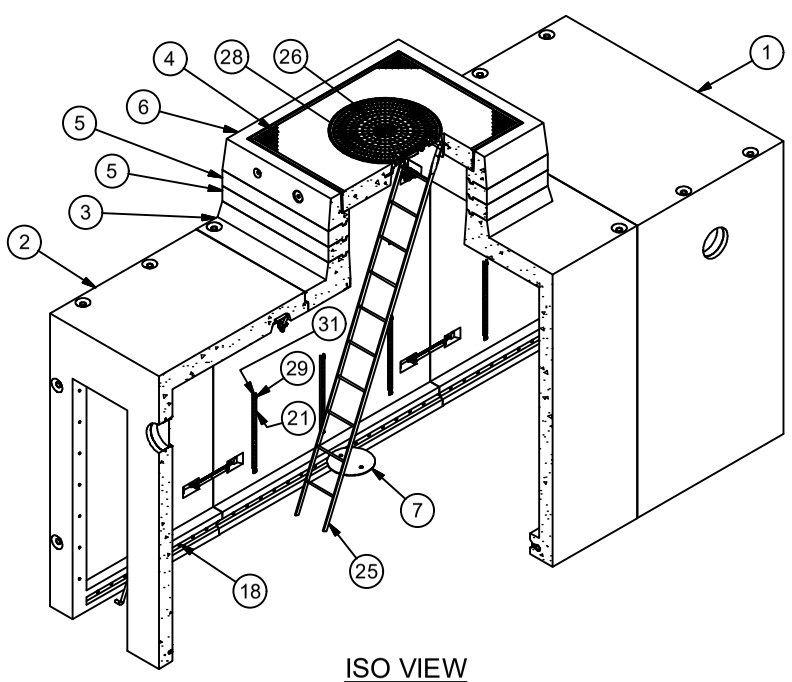

ISO VIEW

NOTES:

- DESIGNED IN ACCORDANCE WITH AASHTO H-20-44 TRAFFIC BRIDGE LOADING USING 5,500 PSI COMPRESSIVE STRENGTH CONCRETE AND 60,000 PSI YIELD STRENGTH ASTM A-706 STEEL REINFORCEMENT PER CALCS. #32018.
- COVER DESIGN FOR TRAFFIC LOADING.
- LIMIT OF COVER OVER ROOF SECTION IS 1'-6" TO 4'-0". WATER LEVEL 3'-0" BELOW GRADE.
- VAULT TO BE PLACED ON A MIN. 6" BASE OF CRUSHER RUN FOR EASE OF INSTALLATION AND EVEN LOAD DISTRIBUTION.
- CONCRETE MIX USED IN POURING THIS PRODUCT SHALL USE FLY ASH AS AN ADMIXTURE.
- FINISH COATING: ALL INTERIOR WALLS AND CEILING SHALL BE PAINTED WHITE.
- ALL PARTS TO BE STENCILED: MFG DATE / JOB NUMBER / PRODUCT ID / WEIGHT.
- MINIMUM EXCAVATION SIZE: 9'-0" X 20'-0" DEPTH REQ'D.

SPECIAL HANDLING NOTE: THIS CONCRETE PRODUCT IS DESIGNED TO BE LIFTED WITH 4 (FOUR) EQUALLY LOADED RIGGINGS LEGS MIN. 60° SLING ANGLE, MEASURED FROM HORIZONTAL.

REVISION HISTORY

REV	DATE	DESCRIPTION	BY
	7/3/2018	REVISED PULL IRON EMBEDMENT FOR RESTRAINT SYSTEM	JP

JENSEN PRECAST EST. 1968
825 STENERI WAY
SPARKS, NV 89431
WWW.JENSENPRECAST.COM

©2016 Jensen Precast- All rights reserved. All materials appearing as Jensen Precast documents and the like are proprietary work product and are protected under U.S. copyright and other laws.
Unless in conjunction with business conducted with Jensen Precast, any use of Jensen Precast work product without express, written consent is prohibited, and recipient is prohibited from distributing any and all work product to non-approved third parties under penalty of civil action.

VAULT DESC: 7'-0" X 8'-0" INTERCEPT TUNNEL VAULT X 18'-0" LONG

PART ID: K78-TV18-INT-N-11TCOMP

JOB NO:

DATE CREATED: 1/8/2018

DATE MODIFIED: 7/17/2018

DRAWN BY: RRAMOS

SHEET: 1 OF 1

REV:

103

AGENCY: EDISON

AGENCY SPEC: UGS VA 411

MANUFACTURING SPEC: None

FILENAME: K78-TV18-INT-N-11TCOMP.idw

K78-TV18-INT-N-11TCOMP.idw