4' x 6'- 6" x 5'- 6"
DUCTED MANHOLE

MODEL K466-DM66-12

L.A.D.W.P. SPEC.
G–322 G1

NOTES:

STRUCTURE DESIGNED IN ACCORDANCE WITH:

AASHTO H–20 TRAFFIC BRIDGE LOADING

ASTM C–857 STANDARD PRACTICE FOR MINIMUM STRUCTURAL DESIGN LOADING FOR UNDERGROUND PRECAST CONCRETE UTILITY STRUCTURES

AMERICAN CONCRETE INSTITUTE ACI 318–05

CONCRETE COMPRESSIVE STRENGTH F'c = 5500 PSI

REINFORCEMENT IN ACCORDANCE WITH ASTM A–706 WITH A YIELD STRENGTH OF Fy = 60,000 PSI.

6" MINIMUM COMPACTED GRANULAR MATERIAL RECOMMENDED FOR SUB–BASE FOR EASE OF INSTALLATION AND EVEN LOAD DISTRIBUTION.

1. UV466–B–12, 7" BASE SLAB. WT. 3,130#.
2. UV466–T66–12, 66" ROOF SECTION. WT. 11,268#.
3. 12" x 13" DIA. SUMP x 5" DEEP WITH RECESS.
4. 18" x 44" DUCTED KNOCKOUT x 12" DEEP.
5. 9" x 18" KNOCKOUT x 4" DEEP.
6. 12" x 14" VENT KNOCKOUT x 5" DEEP.
7. 7/8" DIA. PULL IRON.
8. 1/2" PLASTIC INSERT.
9. 2" DIA. TERMS FOR 1" DIA. GROUND ROD KNOCKOUT.
10. 12" DIA. RECESS.

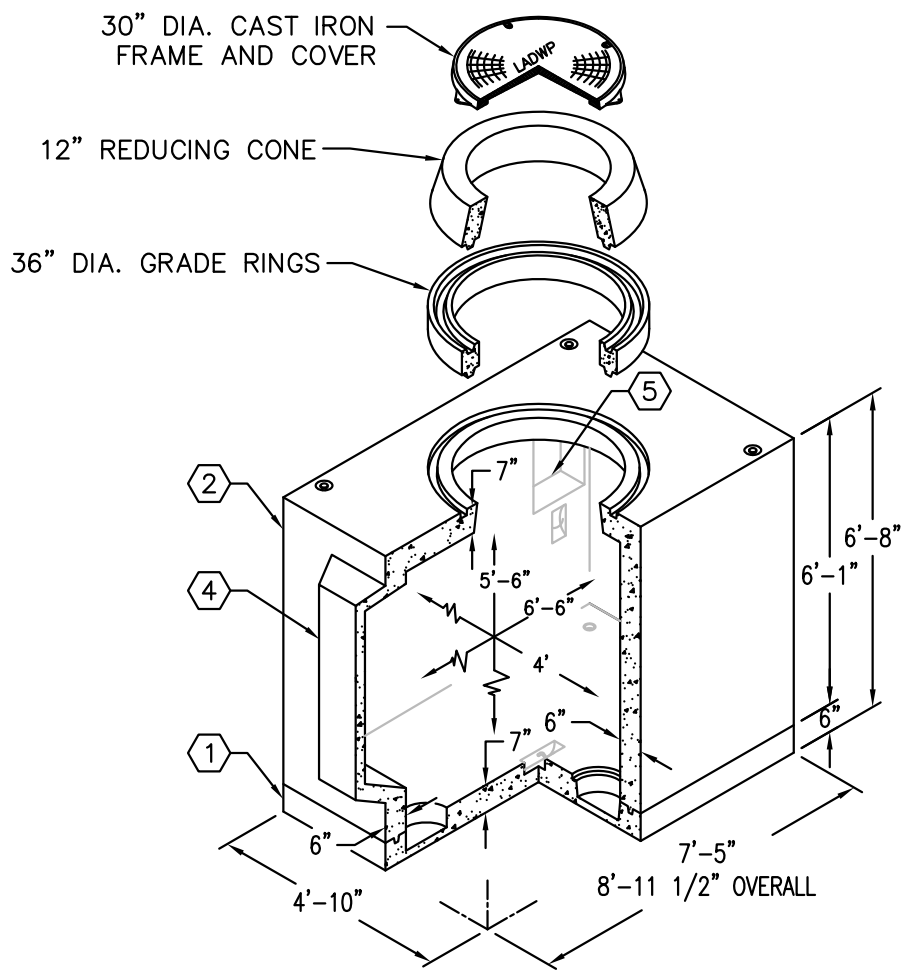

MINIMUM EXCAVATION SIZE:
5'–10" x 10'–0" x REQ'D DEPTH

© 2012 Jensen Precast

Jensen Precast reserves the right to make changes to product design and/or dimensions without notice. Please contact Jensen Precast whenever necessary for confirmation or advice on product design.

JENSEN PRECAST

4' x 6'- 6" x 5'- 6"
DUCTED MANHOLE

MODEL K466-DM66-12

L.A.D.W.P. SPEC.
G–322 G1

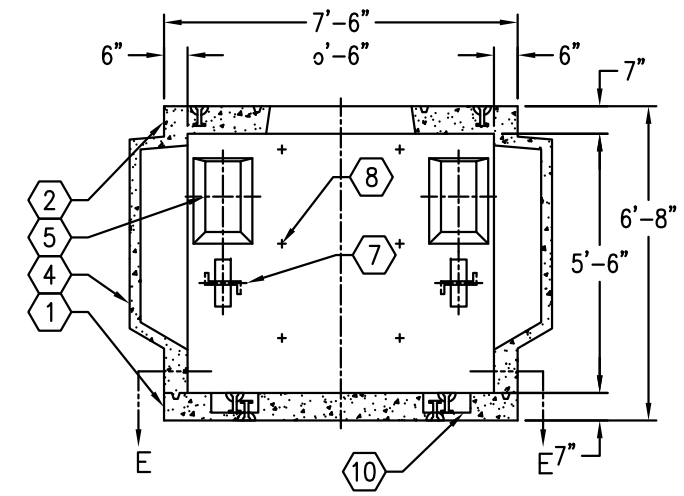

SECTION A–A

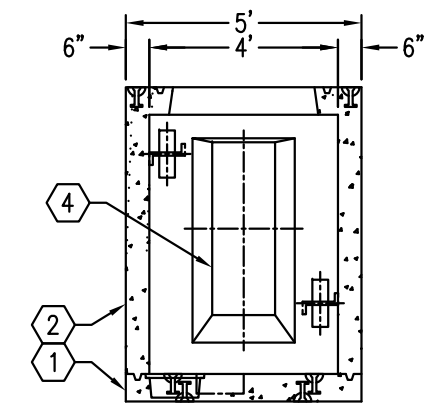

SECTION B–B

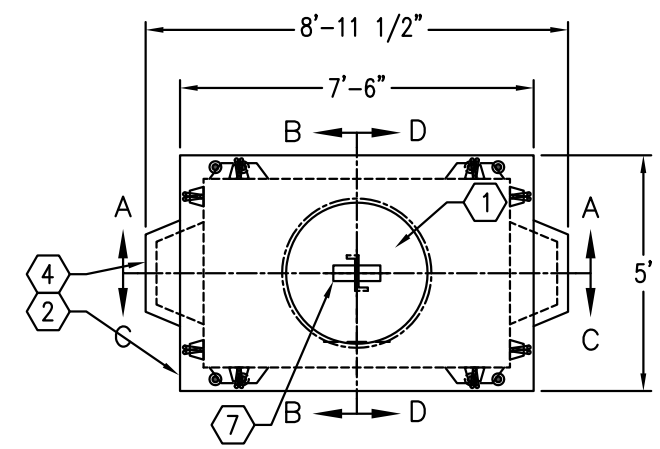

PLAN VIEW

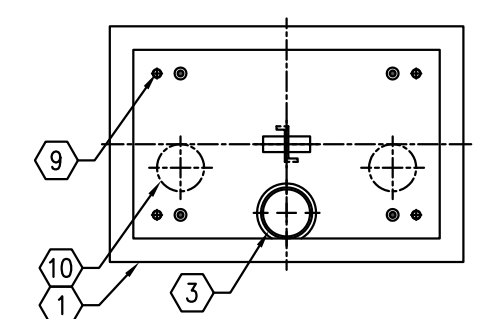

SECTION E–E

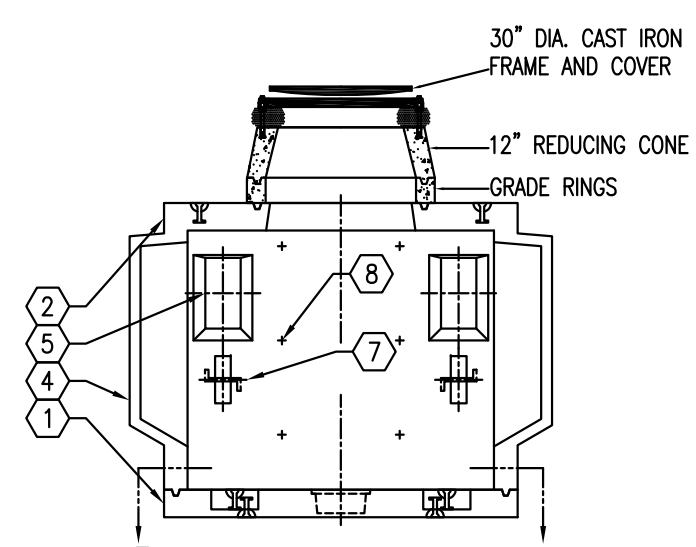

SECTION C–C

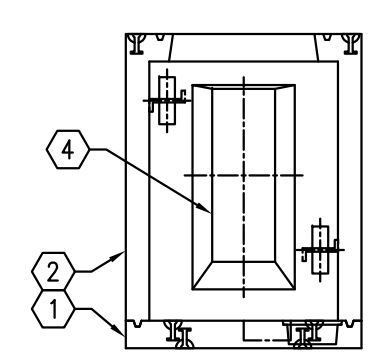

SECTION D–D

© 2012 Jensen Precast

Jensen Precast reserves the right to make changes to product design and/or dimensions without notice. Please contact Jensen Precast whenever necessary for confirmation or advice on product design.

JENSEN PRECAST