NOTE: *A balanced, whole-house ventilation system will be provided in accordance with M1505.4*

TABLE N1101.1(2)ADDITIONAL MEASURES

MEASURE NO.

MEASURE DESCRIPTION

① HIGH-EFFICIENCY HVAC SYSTEMa

a. Gas-fired furnace or boiler AFUE 94 percent, or
b. Air source heat pump HSPF 10.0/16.0 SEER cooling or 8.5 HSPF2 / 15.0 SEER2,
c. Ground-source heat pump COP 3.5 or ENERGY STAR rated.

② HIGH-EFFICIENCY WATER HEATING SYSTEM

a. Natural gas/propane water heater with minimum 0.90 UEF, or
b. Electric heat pump water heater with minimum 3.45 UEF, or
c. Natural gas/propane tankless/instantaneous heater with minimum 0.80 UEF and drain water heat recovery unit installed on a minimum of one shower/tub-shower.

3 WALL INSULATION UPGRADE

Exterior walls—U-0.045/R-21 conventional framing with R-5.0 continuous insulation

4 ADVANCED ENVELOPE

Windows—U-0.21 (Area-weighted average), and
Flat ceilingb—U-0.017/R-60, and
Framed floors—U-0.026/R-38 or slab edge insulation to F-0.48 or less (R-10 for 48"; R-15 for 36" or R-5 fully insulated slab)

5 DUCTLESS HEAT PUMP (Dwelling units with all-electric heat)

a. Provide ductless heat pump of minimum HSPF 10.0 or HSPF2 9.0 in primary zone replaces zonal electric heat sources, and
b. Provide programmable thermostat for all heaters in bedrooms

6 HIGH-EFFICIENCY THERMAL ENVELOPE UAc

Proposed UA is 8 percent lower than the code UA

7 2.75 ACH AIR LEAKAGE CONTROL AND EFFICIENT VENTILATION

Achieve a maximum of 2.75 ACH50 whole-house air leakage when third-party tested and provide a whole-house ventilation system, including heat recovery with a minimum sensible heat recovery efficiency of not less than 66 percent and total fan efficacy of 1.6 CFM/Watt (combined input for supply and exhaust).

a. Appliances located within the building thermal envelope shall have sealed combustion air installed. Combustion air shall be ducted directly from the outdoors.
b. The maximum vaulted ceiling surface area shall not be greater than 50 percent of the total heated space floor area unless vaulted area has a U-factor not greater than U-0.026.
c. In accordance with Table N1104.1(1), the Proposed UA total of the Proposed Alternative Design shall be a minimum 8 percent less than the Code UA total of the Standard Base Case.

N1105.2 Insulation of Ducts

All new duct systems or new portions of duct systems exposed to unconditioned spaces, and buried ductwork within insulation that meets the exception to Section N1105.3, shall be insulated to minimum R-8.
Exceptions:
1. The replacement or addition of a furnace, air conditioner or heat pump shall not require existing ducts to be insulated to current code.
2. Exhaust and intake ductwork.

N1105.3 Installation of Ducts and Air Handling Equipment

For new construction and additions, all new duct systems and air handling equipment and appliances shall be located fully within the building thermal envelope.
Exceptions:
Ventilation intake ductwork and exhaust ductwork.
Up to 10 feet (3048 mm) of HVAC ductwork.
Where two measures are selected for compliance from Table N1101.1(2) and HVAC supply and return ductwork is installed in accordance with either Section N1105.3.1, N1105.3.2 or N1105.3.3.

N1105.3.1 Deeply Buried Duct in Attic

Ducts deeply buried in attic insulation shall be in accordance with all of the following when using Section N1105.3, Exception 3:
Insulation shall be installed to fill gaps and voids between the duct and the ceiling, and a minimum of R-19 insulation shall be installed above the duct between the duct and unconditioned attic.
All ductwork in the attic shall be insulated to R-8.
Insulation depth marker flags shall be installed on the ducts every 10 feet (3048 mm) or as approved by the building official.
Exception: HVAC ductwork shall be permitted to be located outside of the building thermal envelope where the duct is insulated to a minimum of R-27 with a Class II or III vapor retarder.

N1105.3.2 Ducts in an Unvented Crawlspace Outside the Building Thermal Envelope

Ducts located in an unvented crawlspace outside of the building thermal envelope shall be in accordance with all of the following when using Section N1105.3, Exception 3:
In addition to meeting Section R408.3, all seams of the vapor barrier shall overlap a minimum of 12 inches (305 mm) and be sealed with tape or other approved method.
All ductwork in the crawlspace shall be insulated to R-8.
The floor between the crawlspace and the dwelling shall be insulated with minimum R-30.

N1105.3.3 Deeply Buried Duct in Vented Crawlspace

Ducts deeply buried in crawlspace insulation shall be in accordance all of the following when using Section N1105.3, Exception 3:
Insulation shall be installed to fill gaps and voids between the duct and the floor above, and a minimum of R-19 insulation shall be installed below the duct and between the duct and unconditioned crawlspace.
All ductwork in the crawlspace shall be insulated to R-8.
The floor between the crawlspace and the dwelling shall be insulated with minimum R30.
Exception: HVAC ductwork shall be permitted to be located outside of the building thermal envelope where the duct is insulated to a minimum of R-27 with a Class II or III vapor retarder.

TABLE N1101.1(1) PRESCRIPTIVE ENVELOPE REQUIREMENTS	
ABOVE GRADE WALL	R-21 INT.[c]
BELOW GRADE WALL	R-15c.i/R-21
FLAT CEILINGS	R-49
VAULTED CEILINGS	R-30 RAFTER R-30A[g,h] SCISSOR TRUSS
UNDERFLOORS	R-30
SLAB-EDGE PERIMETER	R-15
HEATED SLAB INTERIOR	R-10
WINDOWS	U-0.27
SKYLIGHTS	U-0.50
EXTERIOR DOORS	U-0.20
EXTERIOR DOORS W/ GLAZING [k/j]	U0.27

TABLE M1507.4 **EXHAUST RATES FOR RESIDENTIAL DWELLINGS**	
DOMESTIC KITCHENS RANGE HOODS / DOWNDRAFT EXHAUST	MIN. 150 CFM INTERMITTENT
BATHROOMS-TOILET ROOMS	
ROOMS CONTAINING BATHING AND SPA FACILITIES (STATIC PRESSURE SHALL BE RATED @ 0.10-INCH WATER GAUGE FOR INTERMITTENT FANS	MIN. 80 CFM INTERMITTENT OR 20 CFM CONTINUOUS
TOILET ROOMS WITHOUT BATHING OR SPA FACILITIES, WHEN NOT PROVIDED WITH NATRUAL VENTILATION IN ACCORDANCE WITH SECTION R303.3.2	MIN. 50 CFM

NOTE

MECHANICAL EXHAUST VENTS SHALL NOT TERMINATE WITHIN 36" OF OPERABLE WINDOWS

a. As allowed in Section N1104.1, thermal performance of a component may be adjusted, provided that overall heat loss does not exceed the total resulting from conformance to the required U-factor standards. Calculations to document equivalent heat loss shall be performed using the procedure and approved U-factors contained in Table N1104.1(1).
b. R-values used in this table are nominal for the insulation only in standard wood-framed construction and not for the entire assembly.
c. Wall insulation requirements apply to all exterior wood-framed, concrete or masonry walls that are above grade. This includes cripple walls and rim joist areas. Nominal compliance with R-21 insulation and Intermediate Framing (Section N1104.5.2) with insulated headers.
d. The wall component shall be a minimum solid log or timber wall thickness of 31/2 inches.
e. Below-grade wood, concrete or masonry walls include all walls that are below grade and do not include those portions of such wall that extend more than 24 inches above grade. R-21 for insulation in framed cavity, R-15 continuous insulation.
f. Insulation levels for ceilings that have limited attic/rafter depth such as dormers, bay windows or similar architectural features totaling not more than 150 square feet in area may be reduced to not less than R-21. Where reduced, the cavity shall be filled (except for required ventilation spaces). R-49 insulation installed to minimum 6-inch depth at top plate at exterior of structure to achieve U-factor.
g. Vaulted ceiling heated space floor area exceeding 50 percent of the total heated space floor area shall have a U-factor not greater than U-0.026 (equivalent to R-38 rafter or scissor truss with R-38 advanced framing).
h. A = Advanced frame construction. See Section N1104.6.
i. Heated slab interior applies to concrete slab floors (both on and below grade) that incorporate a radiant heating system within the slab. Insulation shall be installed underneath the entire slab in addition to perimeter insulation.
j. Glass doors shall comply with window performance requirements. Windows exempt from testing in accordance with Section N1104.4 shall comply with window performance requirements if constructed with aluminum with thermal break, wood, vinyl, reinforced vinyl aluminum-clad wood, or insulated fiberglass frames, and double-pane glazing with low-emissivity coatings of 0.10 or less. Buildings designed to incorporate passive solar elements may include glazing with a U-factor greater than 0.35 by using Table N1104.1(1) to demonstrate equivalence to building envelope requirements.
k. A maximum of 28 square feet of exterior door area per dwelling unit may have a U-factor of 0.54 or less.
l. Minimum 24-inch horizontal or vertical below grade. The minimum total distance of 24 inches may be a combination of the horizontal and vertical planes. If a horizonal plane is used on the exterior of the slab, it must be a minimum of 12 inches below finished grade.

M1505.4 Whole-house mechanical ventilation system.

Whole-house mechanical ventilation systems shall be designed in accordance with Sections M1505.4.1 through M1505.4.3.

M1505.4.1 System design.
The whole-house mechanical ventilation system shall provide balanced ventilation. Local exhaust or supply fans are permitted to serve as part of such a system. Outdoor air ventilation provided by a supply fan ducted to the return side of an air handler shall be considered as providing supply ventilation for the balanced system.

M1505.4.2 System controls.
The whole-house mechanical ventilation system shall be provided with controls that enable manual override.

M1505.4.3 Mechanical ventilation rate.
The whole-house mechanical ventilation system shall provide outdoor air at a continuous rate as determined in accordance with Table M1505.4.3(1) or Equation 15-1.

TABLE M1505.4.3(1)CONTINUOUS WHOLE-HOUSE MECHANICAL VENTILATION SYSTEM AIRFLOW RATE

DWELLING UNIT FLOOR AREA (square feet)	**NUMBER OF BEDROOMS**				
	0 – 1	2 – 3	4 – 5	6 – 7	> 7
	Airflow in CFM				
< 1,500	30	45	60	75	90
1,501 – 3,000	45	60	75	90	105
3,001 – 4,500	60	75	90	105	120
4,501 – 6,000	75	90	105	120	135
6,001 – 7,500	90	105	120	135	150
> 7,500	105	120	135	150	165

6 2023 ORSC INSULATION REQUIREMENTS
1 1/4" = 1'-0"

TABLE N1104.8
AIR BARRIER INSTALLATION AND AIR SEALING REQUIREMENTS

COMPONENT	AIR BARRIER CRITERIA
General requirements	A continuous air barrier shall be installed in alignment with the building thermal envelope.
	Breaks or joints in the air barrier shall be sealed.
Ceiling/attic	The air barrier in any dropped ceiling or soffit shall be aligned with the insulation and any gaps in the air barrier shall be sealed.
	Access openings, drop-down stairs, or knee wall doors to unconditioned attic spaces shall be gasketed and sealed.
Walls	The junction of the foundation and sill plate shall be sealed.
	The junction of the top plate and the top of interior walls shall be sealed between wall cavities and windows or door frames.
	All penetrations or utility services through the top and bottom plates shall be sealed.
	Knee walls shall be sealed.
Windows, skylights and doors	The annular space between framing and skylights, and the jambs of windows and doors shall be air sealed. Framing cavities around windows, skylights and doors shall contain continuous insulation or be installed per the fenestration manufacturer's instructions.
Rim/band joists	Rim/band joists shall be a part of the thermal envelope and have a continuous air barrier.
Floors Including cantilevered floors and floors above garages	The air barrier shall be installed at any exposed edge of insulation.
Crawl space walls	Exposed earth in unvented crawl spaces shall be covered with a Class I vapor retarder with overlapping joints taped.
Shafts, penetrations	Duct shafts, utility penetrations and flue shafts opening to exterior or unconditioned space shall be sealed.
Garage separation	Air sealing shall be provided between the garage and conditioned spaces.
Recessed lighting	Recessed light fixtures installed in the building thermal envelope shall be sealed to the finished surface.
Shower/tub on exterior walls	The air barrier installed at exterior walls adjacent to showers and tubs shall separate the wall from the shower or tub.
Electrical/phone box on exterior walls	The air barrier shall be installed behind electrical and communication boxes. Alternatively, air-sealed boxes shall be installed.
HVAC register boots	HVAC supply and return register boots that penetrate the building thermal envelope shall be sealed to the subfloor, wall covering or ceiling penetrated by the boot.

N1104.8.1 Air Barriers

A continuous air barrier shall be installed and fully aligned with the building thermal envelope on every vertical portion of air-permeable insulation and on the warm side of horizontal, air-permeable insulation. Air-permeable insulation shall not be used as a sealing material.

Exception: Unvented attics, continuous insulation walls and similar conditions where an impermeable insulation layer forms an air barrier.

N1104.8.2 Sealing Required

Exterior joints around window and door frames; between wall cavities and window or door frames; between walls and foundation; between walls and roof; between wall panels; at penetrations or utility services through walls, floors and roofs; and all other openings in the exterior envelope shall be sealed in a

N1105.4 HVAC Controls

All heating, ventilating and air-conditioning systems shall be provided controls as specified herein.

N1105.4.1 Temperature Controls

Each heating, ventilating and air-conditioning system shall be provided with at least one thermostat for the regulation of temperature. Each thermostat shall be capable of being set from 55oF to 75oF (13oC to 24oC) where used to control heating only and from 70oF to 85oF (21oC to 29oC) where used to control cooling only. Where used to control both heating and cooling, it shall be capable of being set from 55oF to 85oF (13oC to 29oC) and shall be capable of operating the system heating and cooling in sequence. It shall be capable of providing a temperature range of at least 5oF 2.8oC) within which the supply of heating and cooling energy to the zone is shut off or reduced to a minimum.

N1105.4.1.1 Setback and Shutoff

The thermostat, shall provide a readily accessible automatic means for reducing the energy required for heating and cooling during periods of nonuse or reduced need.
Exceptions:
- Where it can be shown that setback or shutdown will not result in a decrease in overall building energy.
- Equipment with full-load demand of 2 kilowatts (6824 Btu/h) or less may be controlled by readily accessible off-hour controls.
- Lowering thermostat setpoints to reduce energy consumption of the heating system shall not cause energy to be expended to reach the reduced setting.

N1105.4.1.2 Smart Thermostat

For new construction, the thermostat shall meet ENERGY STAR Smart Thermostat criteria with minimum control feature of either integral occupancy sensing or geofencing or approved equivalent.
Exception: Individual heating or cooling units with heating capacity of 2 kilowatts (6824 Btu/h) or less or with cooling capacity of less than 5.3 kilowatts (18 000 Btu/h).

N1105.4.1.3 Heat Pump Controls

Heat pumps having supplementary electric- resistance heat shall have controls that, except during defrost, prevent supplemental heat operation when the heat pump compressor can meet the heating load.

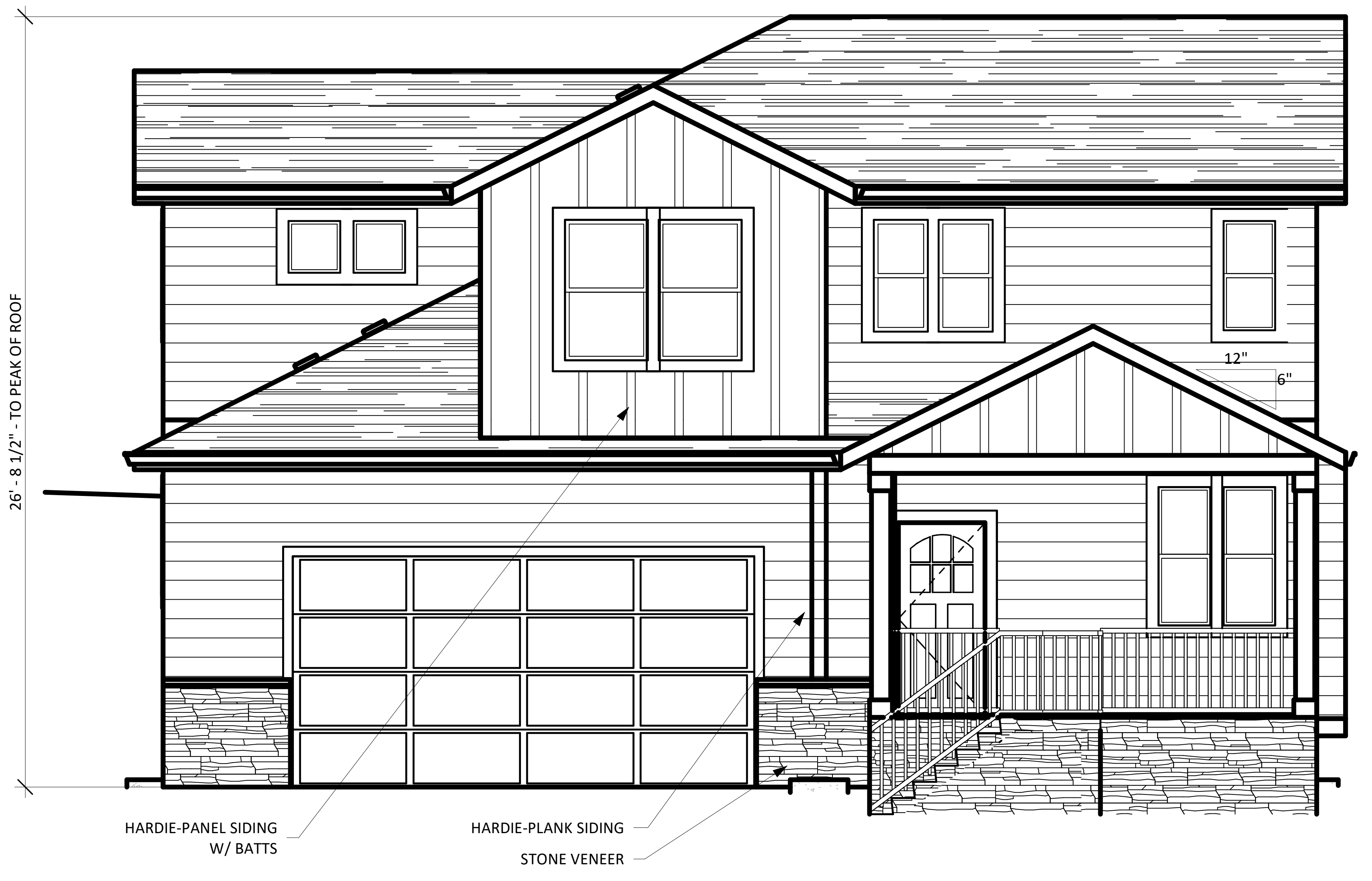

1 FRONT
1 1/4" = 1'-0"

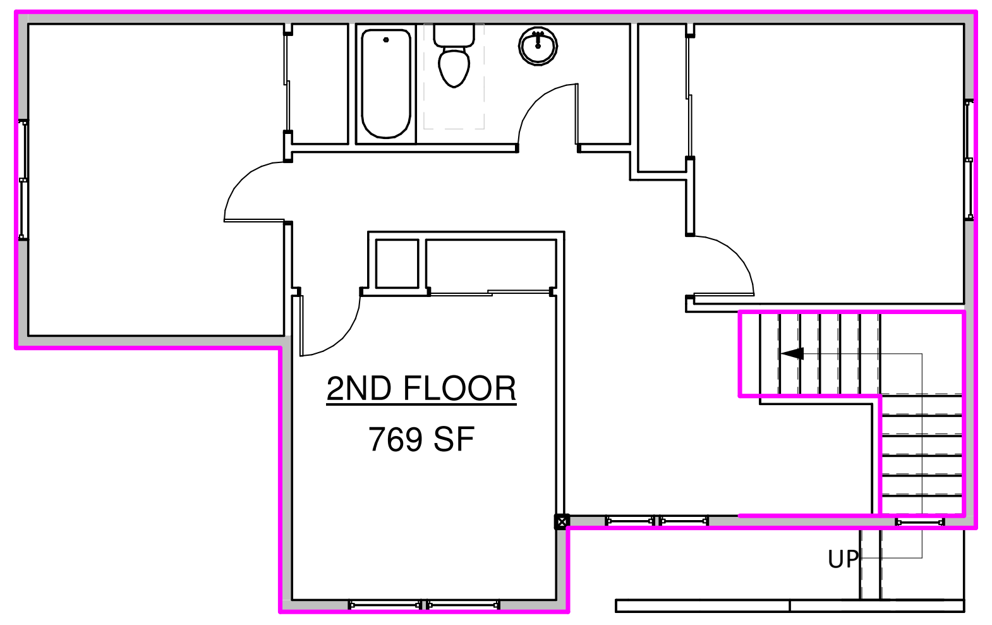

7 2nd FLOOR
1 1/8" = 1'-0"

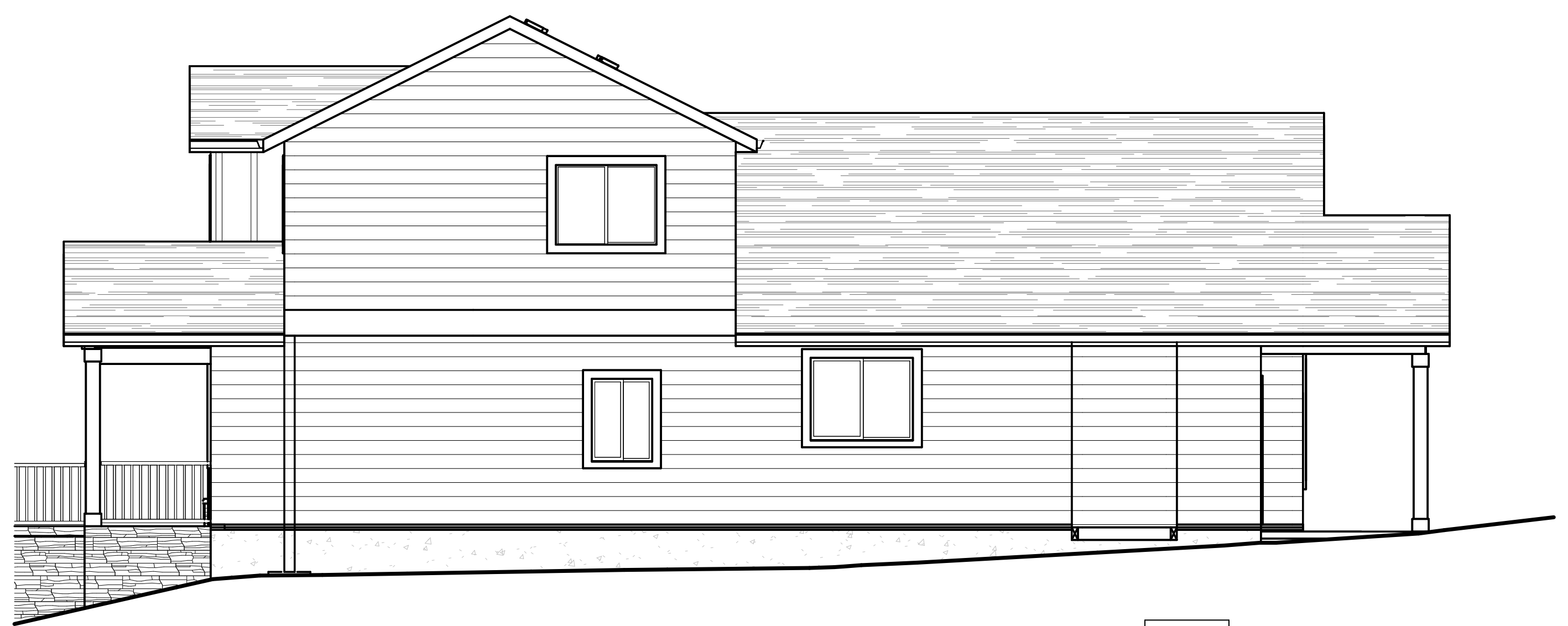

2 RIGHT
1 1/8" = 1'-0"

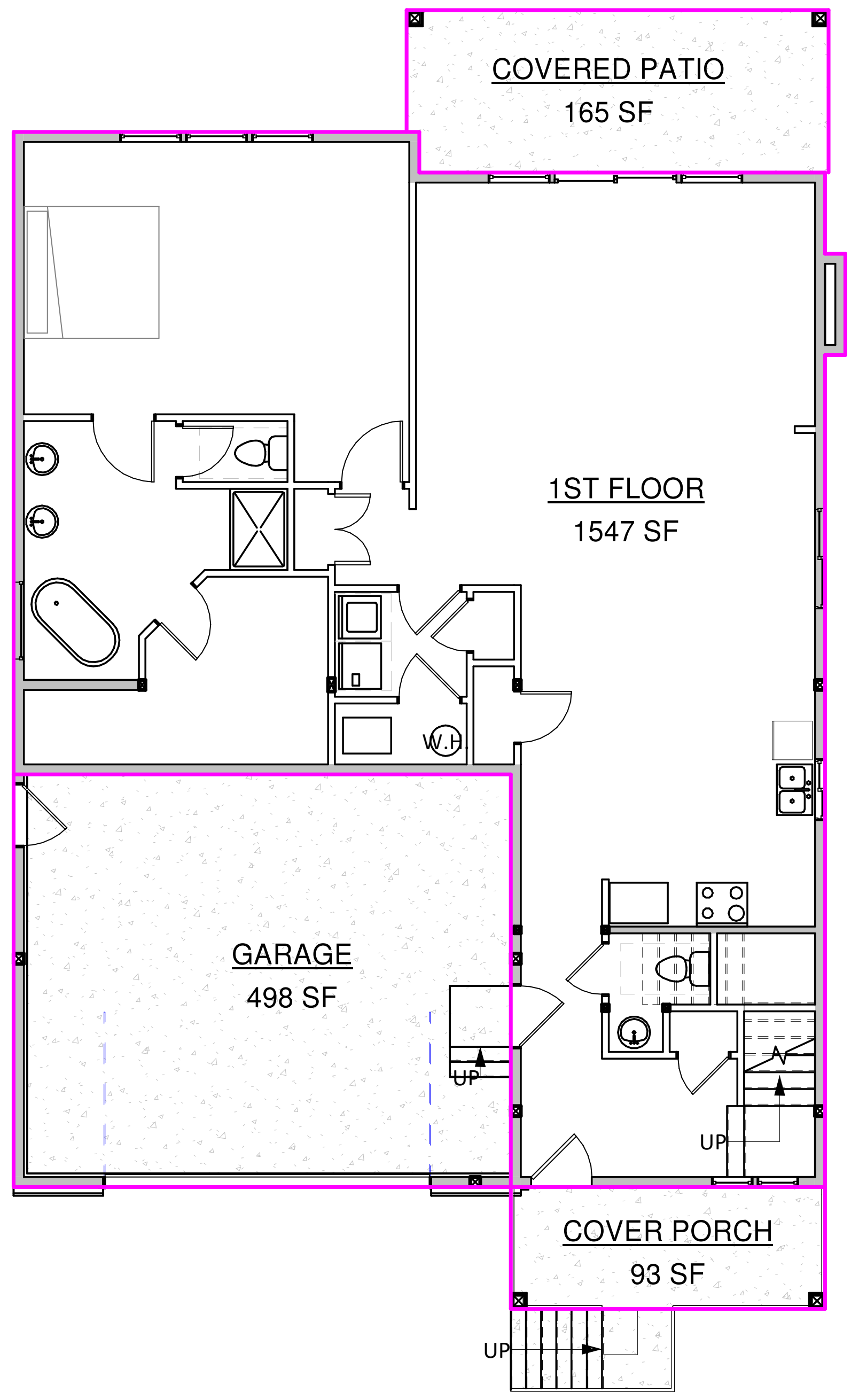

5 1st FLOOR
1 1/8" = 1'-0"

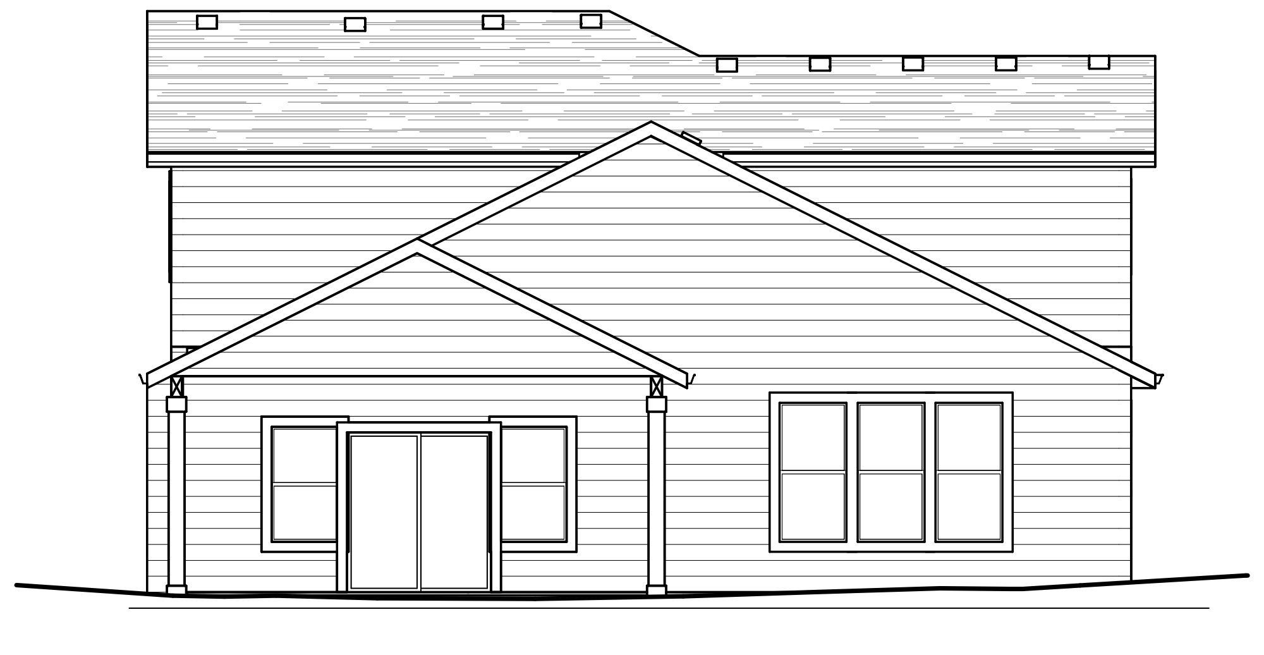

3 REAR
1 1/8" = 1'-0"

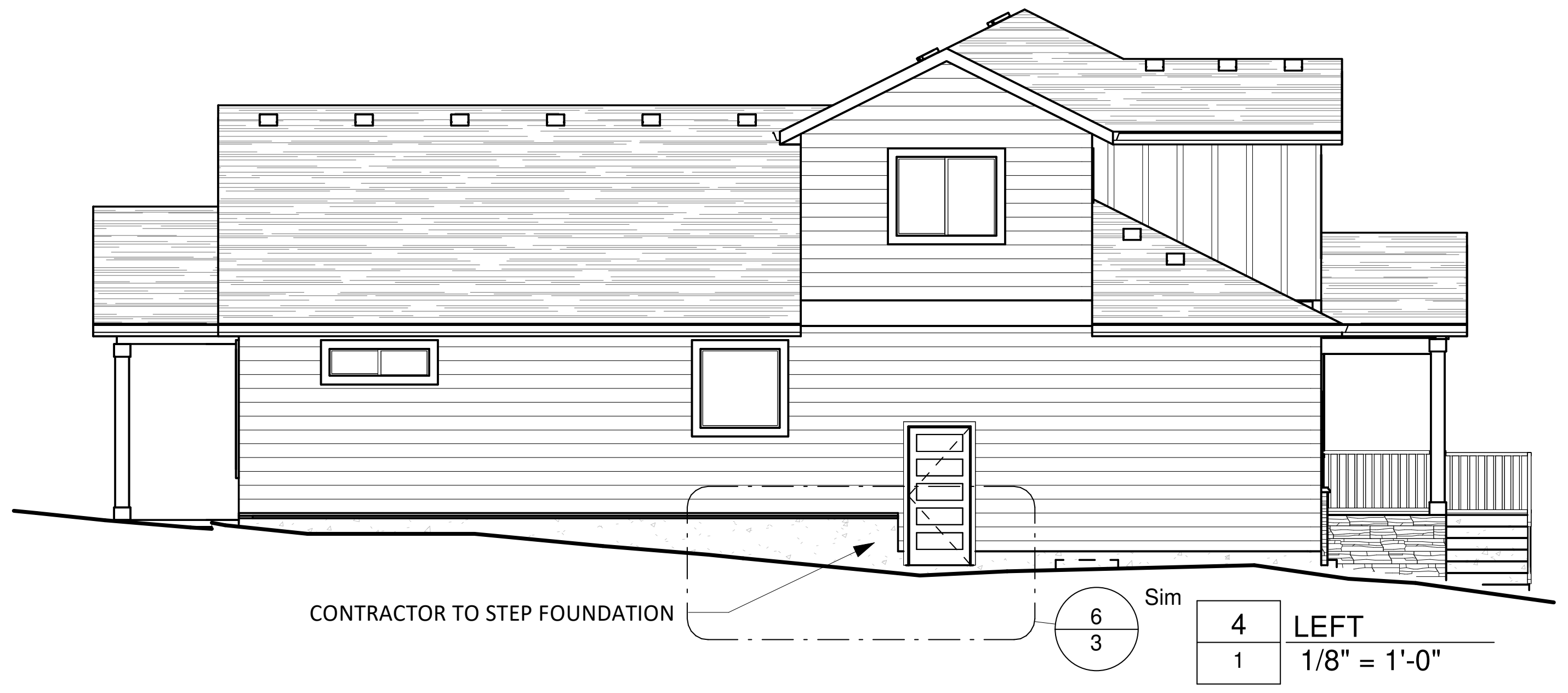

4 LEFT
1 1/8" = 1'-0"

BUILDERS DESIGN INC
COMMERCIAL · RESIDENTIAL · REMODELING
11125 NE WEIDLER ST. · PORTLAND, OR 97220
PHONE: (503) 252-3453 · FAX: (503) 252-3454
EMAIL: BUILDERSDESIGN@GMAIL.COM

All ideas, arrangements, drawings and plans set forth on this sheet are the original work product of, owned by and are the property of Builders Design Inc., an Oregon corporation, and use of this said work product is limited to a specified project for the persons named hereon, and for the construction of one building. Any use, reuse or disclosure of said plans, reproductions or project, ideas, designs and / or arrangements, other than by Builders Design Inc., is strictly prohibited without the written permission of Builders Design Inc. Written dimensions on these drawings shall have precedence over scaled dimensions; contractors shall verify, and be responsible for all dimensions and conditions on the job and this office must be notified of any variations from the dimensions and conditions shown by these drawings. Shop details must be submitted to this office for approval before proceeding with fabrication. Supervision is not included unless specified in work contract.

SENTAUR CONSTRUCTION
3316 SE Evergreen St, Milwaukie, OR 97222

ELEVATIONS

No.	Date	Issued by

Project number:	13844
Date:	2/2/2026 4:57:51 PM
Drawn by:	CHT
Area:	2,311 ft²
Scale	As indicated

1

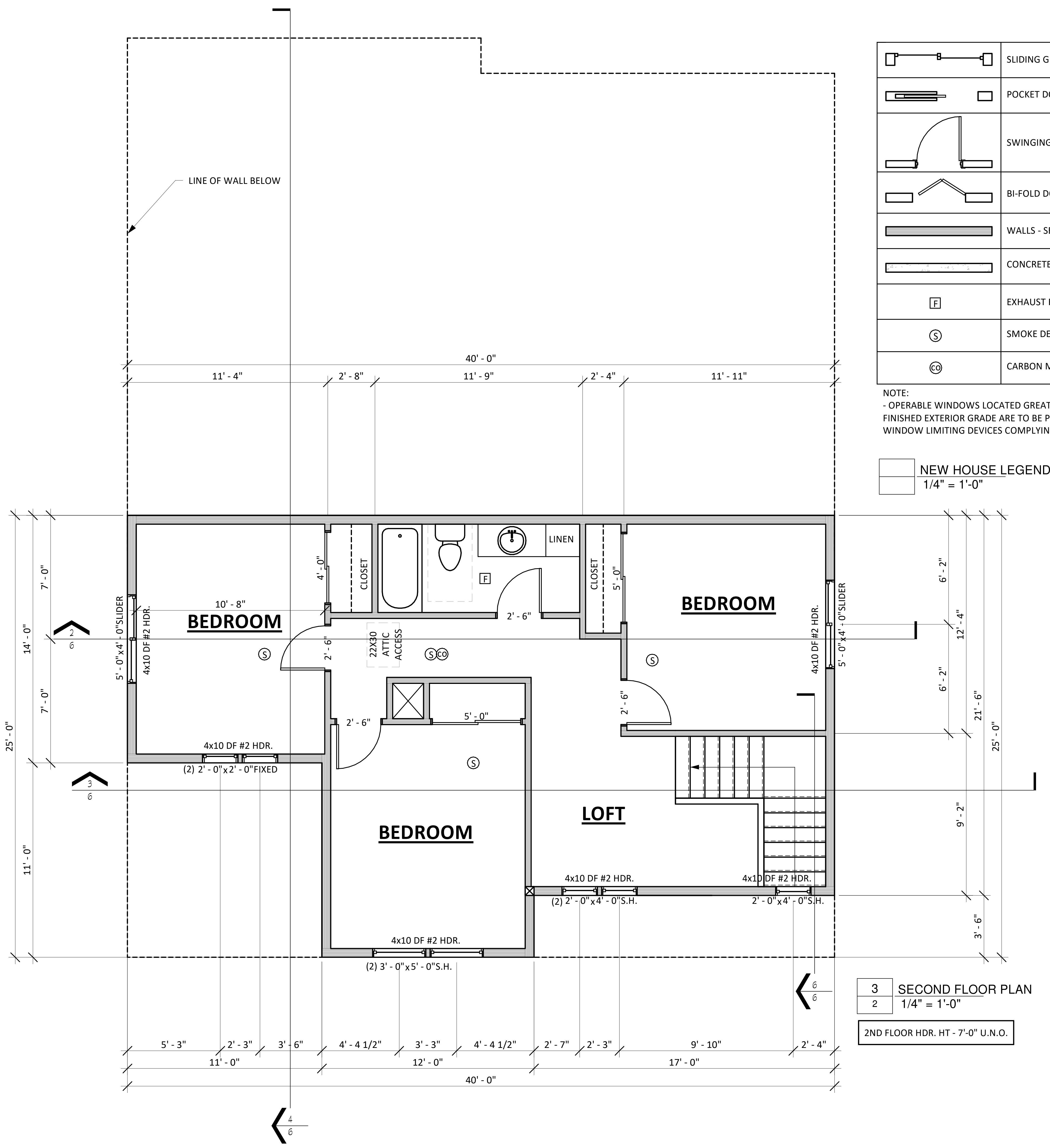
LINE OF WALL BELOW
40' - 0"
11' - 4"
2' - 8"
11' - 9"
2' - 4"
11' - 11"
BEDROOM
10' - 8"
5' - 0"x4' - 0"SLIDER
4x10 DF #2 HDR.
4x10 DF #2 HDR.
(2) 2' - 0"x2' - 0"FIXED
CLOSET
LINEN
CLOSET
BEDROOM
4x10 DF #2 HDR.
5' - 0"x4' - 0"SLIDER
2' - 6"
22X30 ATTIC ACCESS
2' - 6"
5' - 0"
2' - 6"
2' - 6"
BEDROOM
LOFT
4x10 DF #2 HDR.
4x10 DF #2 HDR.
(2) 2' - 0"x4' - 0"S.H.
2' - 0"x4' - 0"S.H.
4x10 DF #2 HDR.
(2) 3' - 0"x5' - 0"S.H.
7' - 0"
14' - 0"
7' - 0"
25' - 0"
11' - 0"
6' - 2"
12' - 4"
6' - 2"
21' - 6"
25' - 0"
9' - 2"
3' - 6"
5' - 3"
2' - 3"
3' - 6"
4' - 4 1/2"
3' - 3"
4' - 4 1/2"
2' - 7"
2' - 3"
9' - 10"
2' - 4"
11' - 0"
12' - 0"
17' - 0"
40' - 0"

	SLIDING GLASS
	POCKET DOOR
	SWINGING DOOR
	BI-FOLD DOOR
	WALLS - SEE DETAILS
	CONCRETE WALL
F	EXHAUST FAN
S	SMOKE DETECTOR
CO	CARBON MONOXIDE DETECTOR

NOTE:
- OPERABLE WINDOWS LOCATED GREATER THAN 6'-0" ABOVE FINISHED EXTERIOR GRADE ARE TO BE PROVIDED WITH WINDOW LIMITING DEVICES COMPLYING WITH ASTM 2090-10

	NEW HOUSE LEGEND 1/4" = 1'-0"

3 SECOND FLOOR PLAN
2 1/4" = 1'-0"

2ND FLOOR HDR. HT - 7'-0" U.N.O.

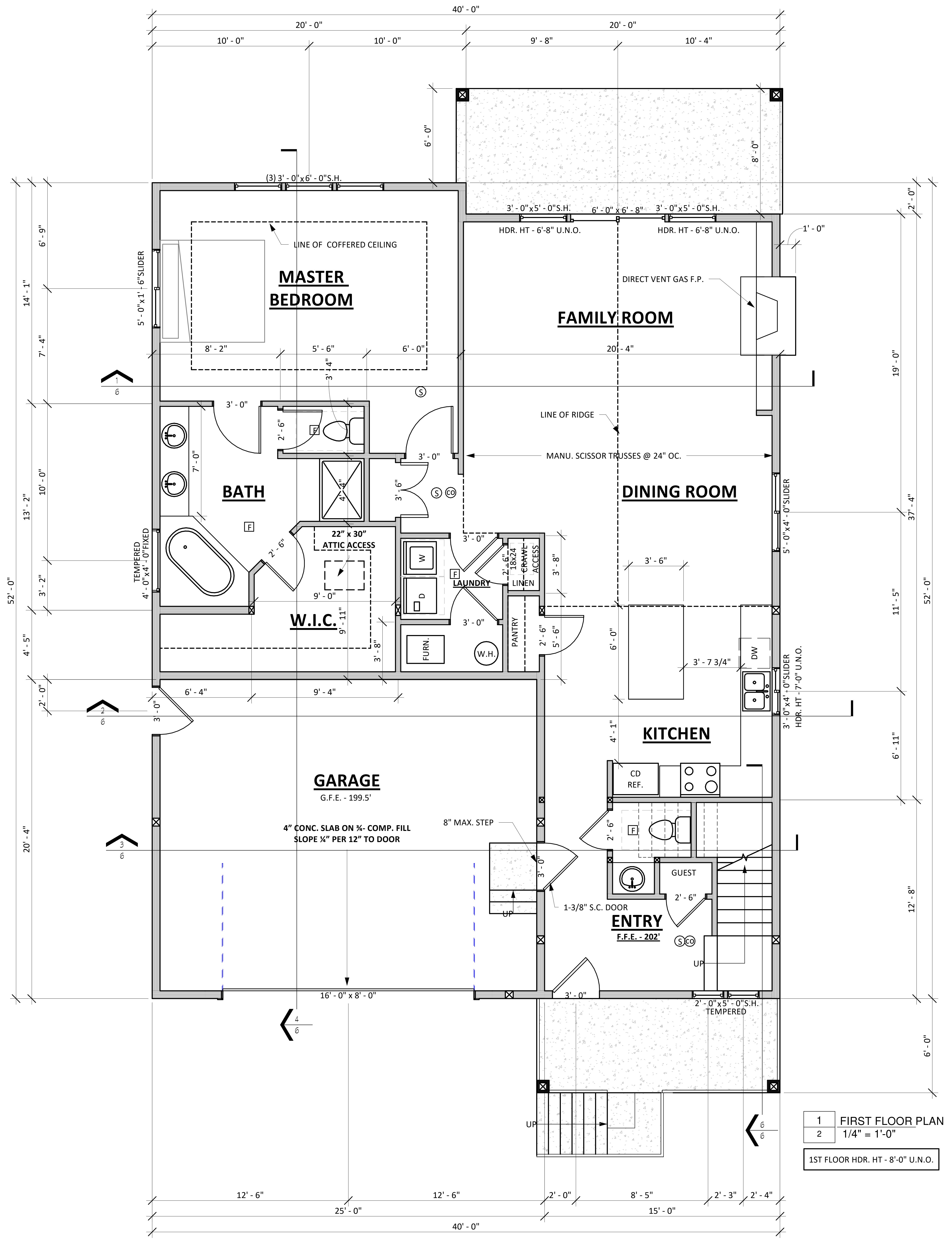
40' - 0"
20' - 0"
20' - 0"
10' - 0"
10' - 0"
9' - 8"
10' - 4"
6' - 0"
8' - 0"
(3) 3' - 0"x6' - 0"S.H.
3' - 0"x5' - 0"S.H.
6' - 0" x 6' - 8"
3' - 0"x5' - 0"S.H.
HDR. HT - 6'-8" U.N.O.
HDR. HT - 6'-8" U.N.O.
1' - 0"
LINE OF COFFERED CEILING
MASTER BEDROOM
5' - 0"x1' - 6"SLIDER
8' - 2"
5' - 6"
6' - 0"
DIRECT VENT GAS F.P.
FAMILY ROOM
20' - 4"
LINE OF RIDGE
MANU. SCISSOR TRUSSES @ 24" OC.
DINING ROOM
5' - 0"x4' - 0"SLIDER
BATH
3' - 0"
2' - 6"
3' - 0"
TEMPERED 4' - 0"x4' - 0"FIXED
22" x 30" ATTIC ACCESS
W.I.C.
9' - 0"
9' - 11"
LAUNDRY
18x24 CRAWL ACCESS
LINEN
PANTRY
FURN.
W.H.
3' - 6"
3' - 7 3/4"
DW
KITCHEN
CD REF.
3' - 0"x4' - 0"SLIDER HDR. HT - 7'-0" U.N.O.
GARAGE
G.F.E. - 199.5'
4" CONC. SLAB ON ¾- COMP. FILL SLOPE ¼" PER 12" TO DOOR
8" MAX. STEP
1-3/8" S.C. DOOR
GUEST
ENTRY
F.F.E. - 202'
16' - 0" x 8' - 0"
3' - 0"
2' - 0"x5' - 0"S.H. TEMPERED
UP
UP
UP
6' - 4"
9' - 4"
14' - 1"
6' - 9"
7' - 4"
13' - 2"
10' - 0"
3' - 2"
52' - 0"
4' - 5"
2' - 0"
20' - 4"
2' - 0"
19' - 0"
37' - 4"
11' - 5"
52' - 0"
6' - 11"
12' - 8"
6' - 0"
12' - 6"
12' - 6"
2' - 0"
8' - 5"
2' - 3"
2' - 4"
25' - 0"
15' - 0"
40' - 0"

1 FIRST FLOOR PLAN
2 1/4" = 1'-0"

1ST FLOOR HDR. HT - 8'-0" U.N.O.

BUILDERS DESIGN INC
COMMERCIAL · RESIDENTIAL · REMODELING
11125 NE WEIDLER ST. · PORTLAND, OR 97220
PHONE: (503) 252-3453 · FAX: (503) 252-3454
EMAIL: BUILDERSDESIGN@GMAIL.COM

All ideas, arrangements, drawings and plans set forth on this sheet are the original work product of, owned by and are the property of Builders Design Inc., an Oregon corporation, and use of this said work product is limited to a specified project for the persons named hereon, and for the construction of one building. Any use, reuse or disclosure of said plans, reproductions or project, ideas, designs and / or arrangements, other than by Builders Design Inc., is strictly prohibited without the written permission of Builders Design Inc. Written dimensions on these drawings shall have precedence over scaled dimensions; contractors shall verify, and be responsible for all dimensions and conditions on the job and this office must be notified of any variations from the dimensions and conditions shown by these drawings. Shop details must be submitted to this office for approval before proceeding with fabrication. Supervision is not included unless specified in work contract.

SENTAUR CONSTRUCTION
3316 SE Evergreen St, Milwaukie, OR 97222

FLOOR PLANS

No.	Date	Issued by

Project number:	13844
Date:	2/2/2026 4:57:51 PM
Drawn by:	CHT
Area:	---
Scale	1/4" = 1'-0"

MARK	SIZE (L" X W" X H")	REBAR (EACH WAY TYP.)	CAPACITY kips
F18	18 X 18 X 12	(2) #4	3
F24	24 X 24 X 12	(2) #4	6
F30	30 X 30 X 12	(3) #4	9
F33	33 X 33 X 12	(3) #4	11
F36	36 X 36 X 15	(3) #4	13

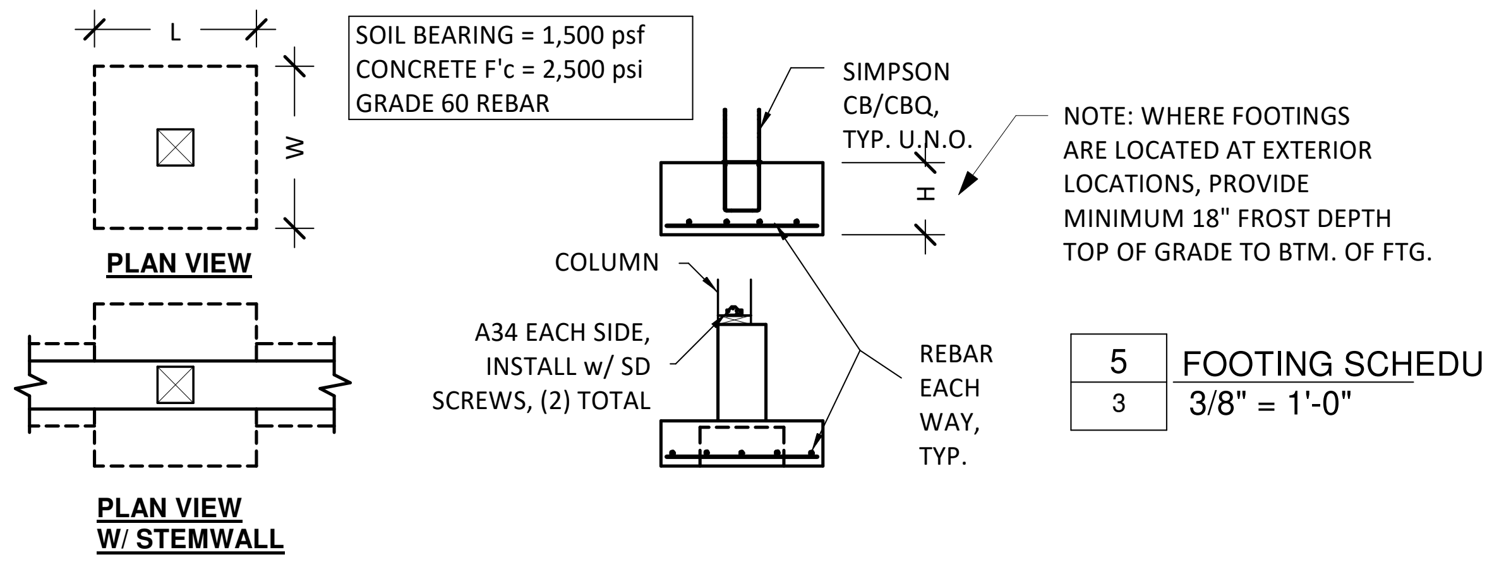
L
W
PLAN VIEW
PLAN VIEW
W/ STEMWALL
SIMPSON
CB/CBQ,
TYP. U.N.O.
H
COLUMN
A34 EACH SIDE,
INSTALL w/ SD
SCREWS, (2) TOTAL
REBAR
EACH
WAY,
TYP.

SOIL BEARING = 1,500 psf
CONCRETE F'c = 2,500 psi
GRADE 60 REBAR

NOTE: WHERE FOOTINGS ARE LOCATED AT EXTERIOR LOCATIONS, PROVIDE MINIMUM 18" FROST DEPTH TOP OF GRADE TO BTM. OF FTG.

5 FOOTING SCHEDULE
3 3/8" = 1'-0"

DECKING TO BE 1-1/8" EDGE-GOLD SUBFLOOR	**CONCRETE SLABS** 4" CONC. SLAB w/ 6"x6" W1.4xW1.4 W.W.F. OVER 6" MIN. WASHED GRAVEL OVER 98% COMPACTED FILL ON UNDISTURBED SOIL, SLOPE TOWARD DOOR MIN 1/4":1'-0"
6 MIL. BLACK POLY GROUNDCOVER - SEAL ALL TEARS IN MATERIAL - SEAL ALL PENETRATIONS AND CONNECTIONS TO FOUNDATION WALLS - JOINTS LAPPED 12 AT SEAMS AND EXTENDED UP FOUNDATION WALLS 12” MIN.	
4x8 BEAMS - MIN. 18" CLEARANCE BELOW BEAMS	═
4x4 POSTS (4x6 AT JOINTS) ON 55# FELT ON 18" Ø x 9" CONC. FTG.'S	⊠
FOUNDATION VENTS - AVOID ANCHOR BOLT AND DOOR LOCATIONS VERIFY WITH PLANS AND STRUCTURAL DRAWINGS	▭
CONCRETE FOUNDATION WALL - SEE DETAILS	▭
CONCRETE PAD FOOTING - SIZE & REBAR PER PLAN - MIN. 18" FROST DEPTH	⬚

- HOLDDOWNS LOCATIONS SHOWN ARE APPROXIMATE. THE CONTRACTOR IS RESPONSIBLE FOR THE PRECISE LOCATION. SEE SHEAR NOTES PAGE AND EMBEDMENT & HOLDOWN SPECIFICATIONS.

- FOUNDATION VENTILATION REQUIRED: THE FOUNDATION AREA MUST BE 1/150 OF THE AREA OF THE SPACE VENTILATED
- CRAWL SPACE IS 1,420 S.F.
- CRAWL SPACE VENTS MUST PROVIDE MIN. 65 SQ. IN. (0.45 S.F.)
- 1,420 / 150 = 9.46 - 9.46/.45 = 22 VENTS REQUIRED

CRAWL SPACE FOUNDATION LEGEND
1/4" = 1'-0"

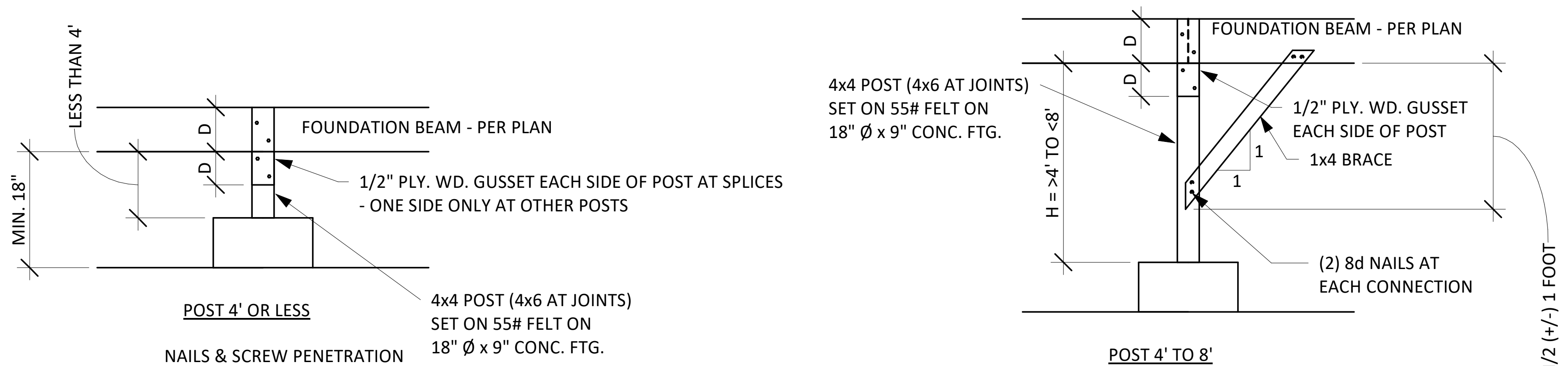
LESS THAN 4'
MIN. 18"
D
D
FOUNDATION BEAM - PER PLAN
1/2" PLY. WD. GUSSET EACH SIDE OF POST AT SPLICES
- ONE SIDE ONLY AT OTHER POSTS
4x4 POST (4x6 AT JOINTS)
SET ON 55# FELT ON
18" Ø x 9" CONC. FTG.
POST 4' OR LESS
4x4 POST (4x6 AT JOINTS)
SET ON 55# FELT ON
18" Ø x 9" CONC. FTG.
FOUNDATION BEAM - PER PLAN
D
D
H = >4' TO <8'
1/2" PLY. WD. GUSSET
EACH SIDE OF POST
1x4 BRACE
1
1
(2) 8d NAILS AT
EACH CONNECTION
H/2 (+/-) 1 FOOT
POST 4' TO 8'

NAILS & SCREW PENETRATION
8d = 1-1/2"
10d = 1-5/8"

END OR EDGE DISTANCE
3/4"
13/16"

CONNECTORS:
1. QUANTITY AS SHOWN ON DETAILS
2. GUSSET PLATE: 1/2" STRUCTURAL SHEATHING
3. 8d NAILS

3 FOUNDATION POSTS
3 1/2" = 1'-0"

GENERAL NOTES
FLOOR SLAB:
- OPTIONAL 6/6x10/10 W.W.M.
- PROVIDE CONTROL JOINTS AT 20’ OC MAX.

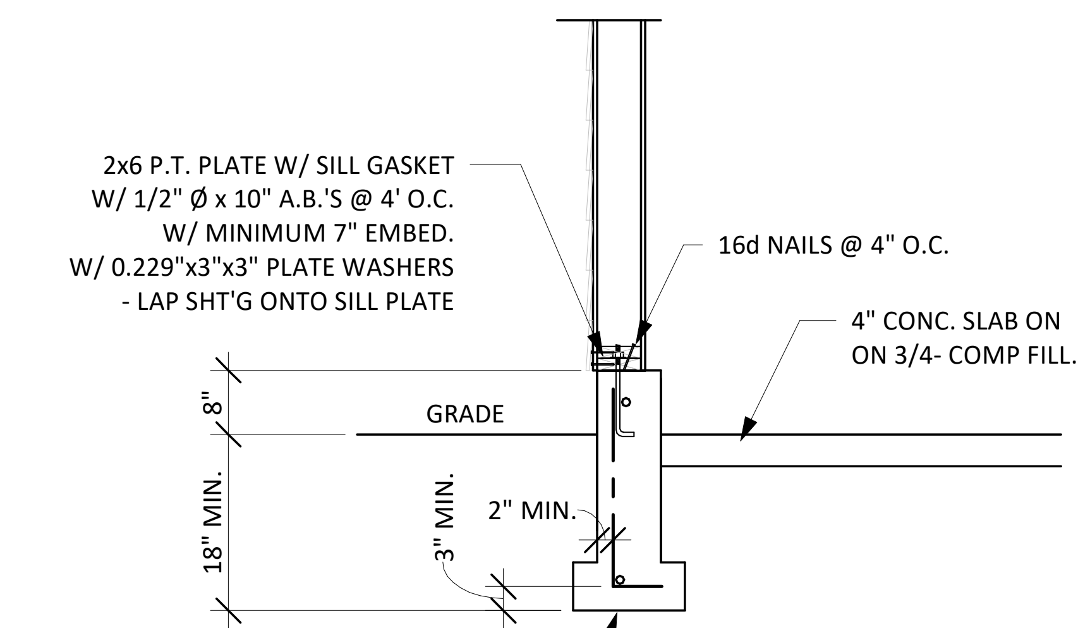
2x6 P.T. PLATE W/ SILL GASKET
W/ 1/2" Ø x 10" A.B.'S @ 4' O.C.
W/ MINIMUM 7" EMBED.
W/ 0.229"x3"x3" PLATE WASHERS
- LAP SHT'G ONTO SILL PLATE
16d NAILS @ 4" O.C.
4" CONC. SLAB ON
ON 3/4- COMP FILL.
GRADE
8"
18" MIN.
3" MIN.
2" MIN.
TYP. 8" CONCRETE WALLS
W/ #4 REBAR AT TOP OF WALL
W/ #4 BARS @ 48" O.C. VERT. (WITH HOOKS)
W/ 15"x7" CONCRETE FOOTINGS
W/ (1) #4 REBAR CONTINUOUS (3" CLR. TO BTM.)

4 TYP. FOUNDATION WALL - AT GARAGE - 2 STORY
3 1/2" = 1'-0"

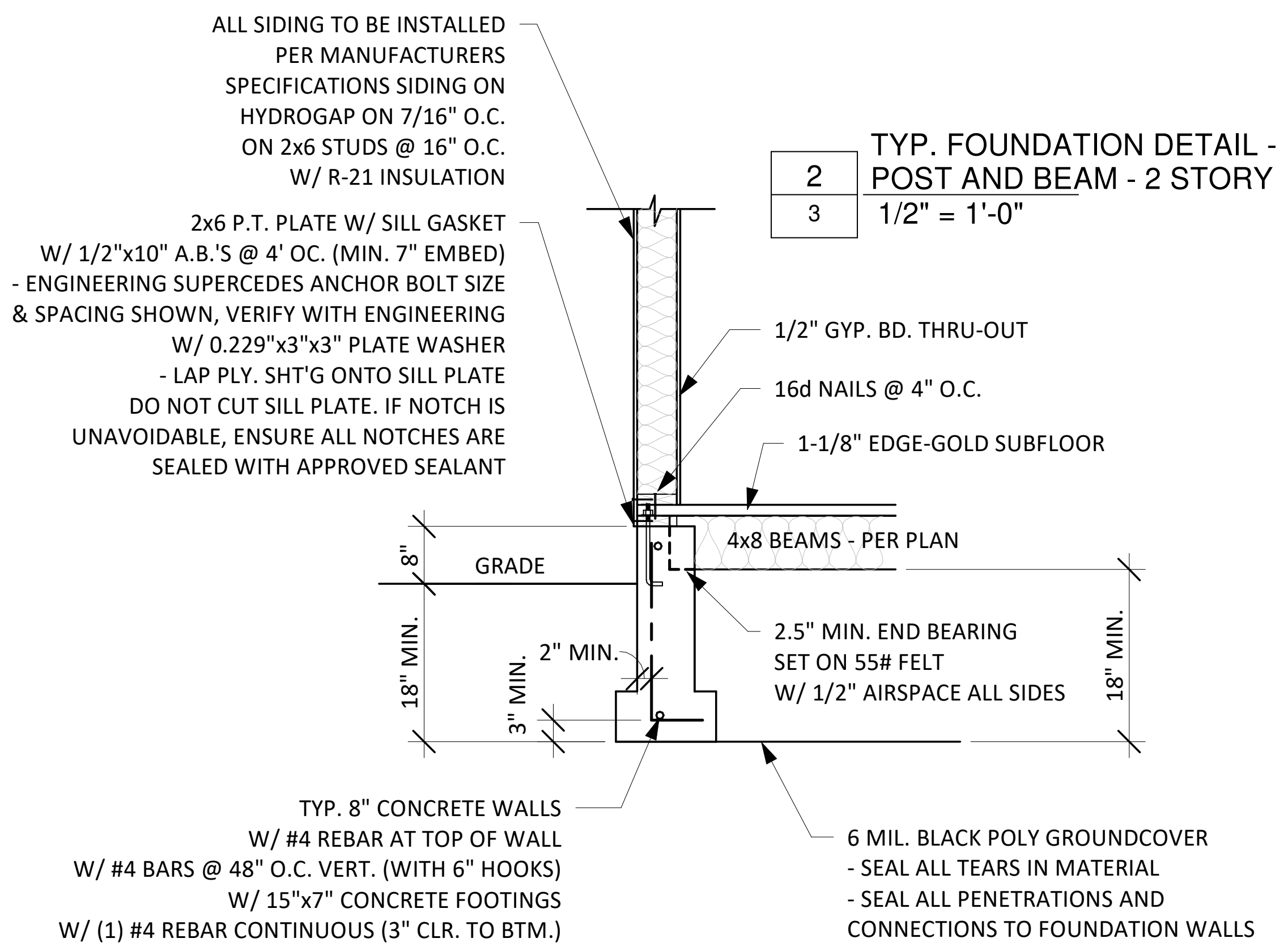
ALL SIDING TO BE INSTALLED
PER MANUFACTURERS
SPECIFICATIONS SIDING ON
HYDROGAP ON 7/16" O.C.
ON 2x6 STUDS @ 16" O.C.
W/ R-21 INSULATION
2x6 P.T. PLATE W/ SILL GASKET
W/ 1/2"x10" A.B.'S @ 4' OC. (MIN. 7" EMBED)
- ENGINEERING SUPERCEDES ANCHOR BOLT SIZE
& SPACING SHOWN, VERIFY WITH ENGINEERING
W/ 0.229"x3"x3" PLATE WASHER
- LAP PLY. SHT'G ONTO SILL PLATE
DO NOT CUT SILL PLATE. IF NOTCH IS
UNAVOIDABLE, ENSURE ALL NOTCHES ARE
SEALED WITH APPROVED SEALANT
1/2" GYP. BD. THRU-OUT
16d NAILS @ 4" O.C.
1-1/8" EDGE-GOLD SUBFLOOR
4x8 BEAMS - PER PLAN
GRADE
8"
18" MIN.
3" MIN.
2" MIN.
2.5" MIN. END BEARING
SET ON 55# FELT
W/ 1/2" AIRSPACE ALL SIDES
18" MIN.
TYP. 8" CONCRETE WALLS
W/ #4 REBAR AT TOP OF WALL
W/ #4 BARS @ 48" O.C. VERT. (WITH 6" HOOKS)
W/ 15"x7" CONCRETE FOOTINGS
W/ (1) #4 REBAR CONTINUOUS (3" CLR. TO BTM.)
6 MIL. BLACK POLY GROUNDCOVER
- SEAL ALL TEARS IN MATERIAL
- SEAL ALL PENETRATIONS AND
CONNECTIONS TO FOUNDATION WALLS

2 TYP. FOUNDATION DETAIL - POST AND BEAM - 2 STORY
3 1/2" = 1'-0"

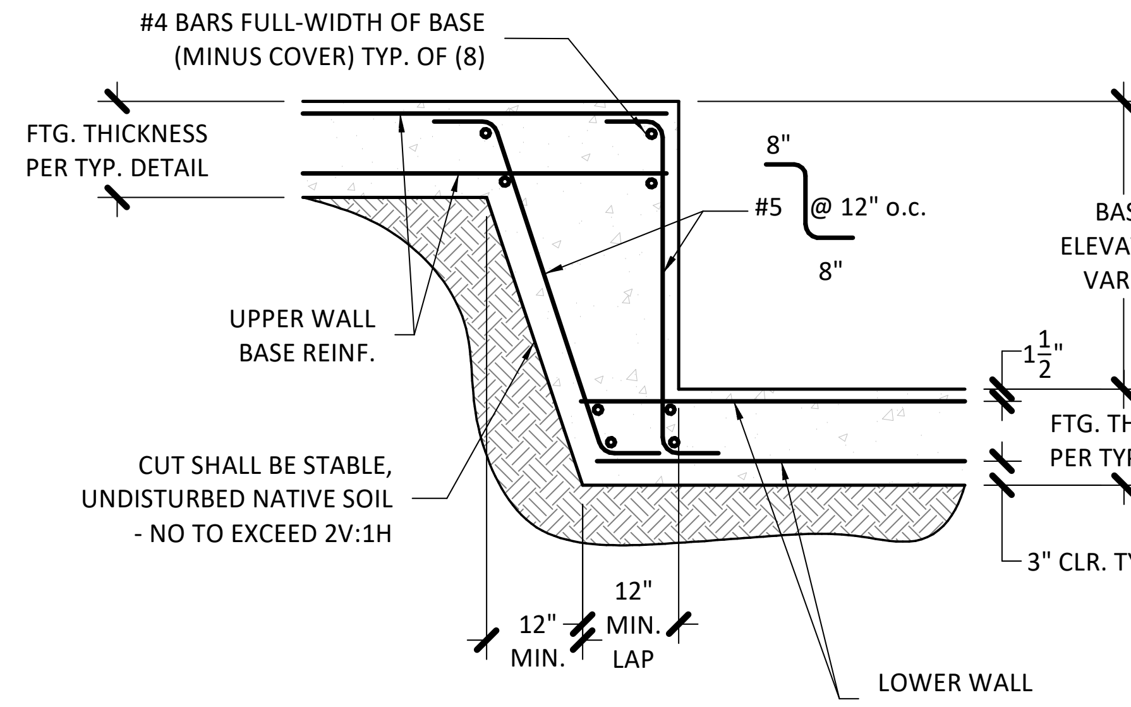
#4 BARS FULL-WIDTH OF BASE
(MINUS COVER) TYP. OF (8)
FTG. THICKNESS
PER TYP. DETAIL
8"
#5
@ 12" o.c.
8"
BASE
ELEVATION
VARIES
UPPER WALL
BASE REINF.
1 1/2"
FTG. THICKNESS
PER TYP. DETAIL
CUT SHALL BE STABLE,
UNDISTURBED NATIVE SOIL
- NO TO EXCEED 2V:1H
3" CLR. TYP.
12"
MIN.
12"
MIN.
LAP
LOWER WALL
BASE REINF.

FOOTING STEP REINFORCEMENT

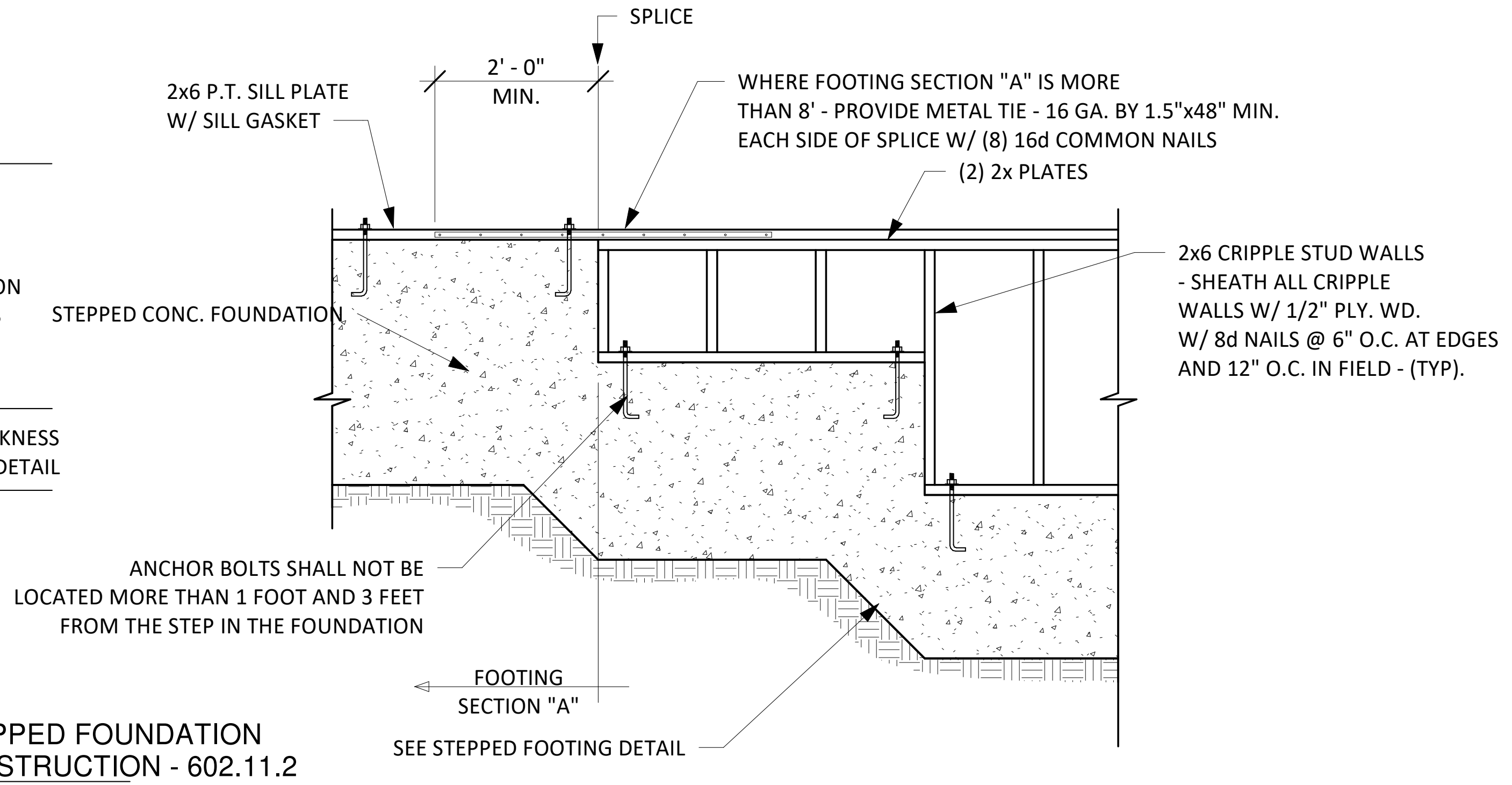
SPLICE
2' - 0"
MIN.
2x6 P.T. SILL PLATE
W/ SILL GASKET
WHERE FOOTING SECTION "A" IS MORE
THAN 8' - PROVIDE METAL TIE - 16 GA. BY 1.5"x48" MIN.
EACH SIDE OF SPLICE W/ (8) 16d COMMON NAILS
(2) 2x PLATES
STEPPED CONC. FOUNDATION
2x6 CRIPPLE STUD WALLS
- SHEATH ALL CRIPPLE
WALLS W/ 1/2" PLY. WD.
W/ 8d NAILS @ 6" O.C. AT EDGES
AND 12" O.C. IN FIELD - (TYP).
ANCHOR BOLTS SHALL NOT BE
LOCATED MORE THAN 1 FOOT AND 3 FEET
FROM THE STEP IN THE FOUNDATION
FOOTING
SECTION "A"
SEE STEPPED FOOTING DETAIL

6 STEPPED FOUNDATION CONSTRUCTION - 602.11.2
3 1/2" = 1'-0"

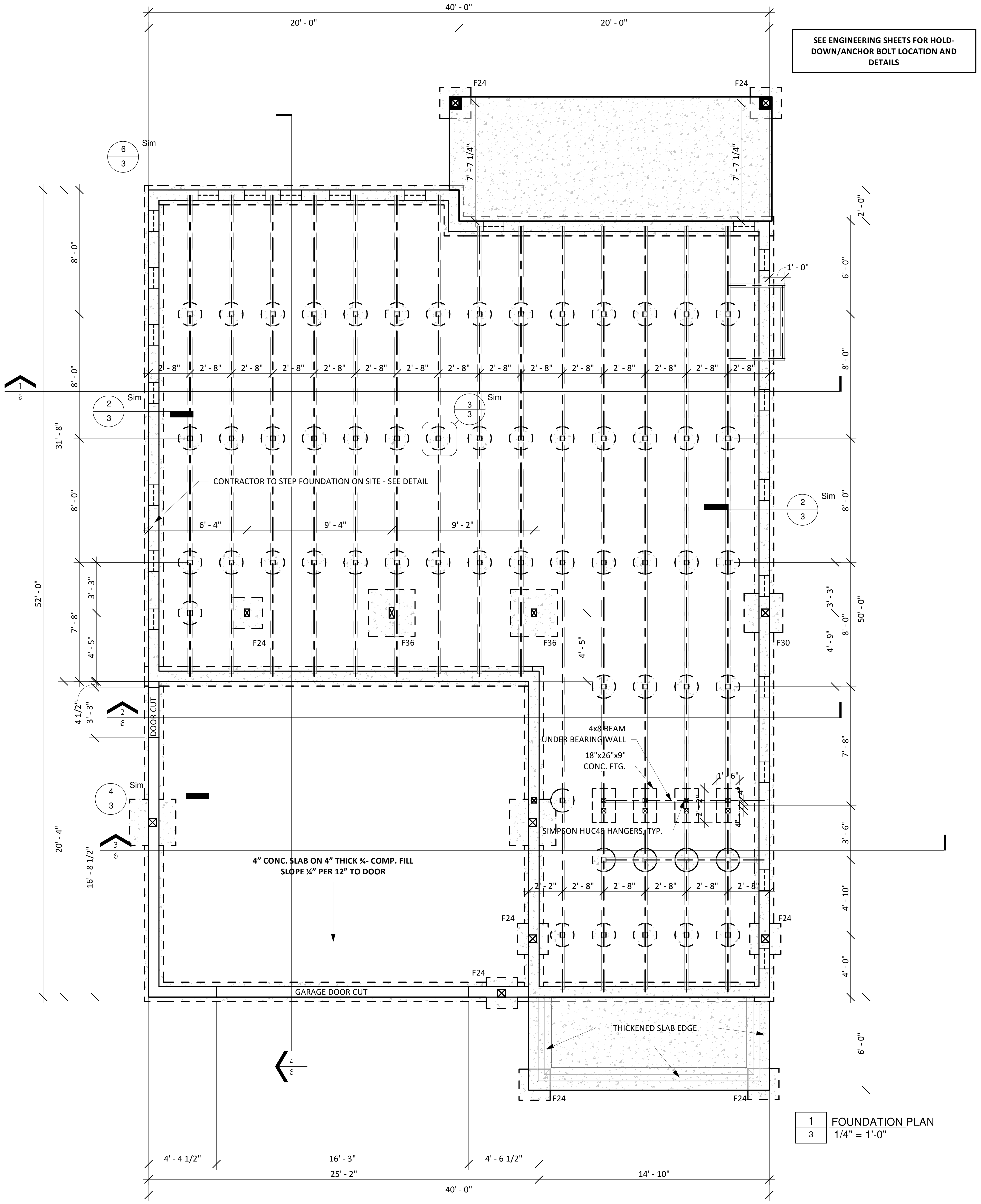
40' - 0"
20' - 0"
20' - 0"
F24
F24
7' - 7 1/4"
7' - 7 1/4"
2' - 0"
6' - 0"
1' - 0"
8' - 0"
6
3
Sim
8' - 0"
8' - 0"
31' - 8"
8' - 0"
52' - 0"
1
6
2' - 8"
2
3
Sim
3
3
Sim
CONTRACTOR TO STEP FOUNDATION ON SITE - SEE DETAIL
2
3
Sim
6' - 4"
9' - 4"
9' - 2"
3' - 3"
7' - 8"
4' - 5"
F24
F36
F36
4' - 5"
F30
3' - 3"
4' - 9"
8' - 0"
50' - 0"
4 1/2"
3' - 3"
2
6
DOOR CUT
4x8 BEAM
UNDER BEARING WALL
18"x26"x9"
CONC. FTG.
1' - 6"
7' - 8"
4
3
Sim
SIMPSON HUC48 HANGERS, TYP.
3' - 6"
3
6
20' - 4"
16' - 8 1/2"
4” CONC. SLAB ON 4” THICK ¾- COMP. FILL
SLOPE ¼” PER 12” TO DOOR
2' - 2"
4' - 10"
F24
F24
4' - 0"
F24
GARAGE DOOR CUT
THICKENED SLAB EDGE
6' - 0"
4
6
F24
F24
4' - 4 1/2"
16' - 3"
4' - 6 1/2"
25' - 2"
14' - 10"
40' - 0"

SEE ENGINEERING SHEETS FOR HOLD-DOWN/ANCHOR BOLT LOCATION AND DETAILS

1 FOUNDATION PLAN
3 1/4" = 1'-0"

BUILDERS DESIGN INC
COMMERCIAL · RESIDENTIAL · REMODELING
11125 NE WEIDLER ST. · PORTLAND, OR 97220
PHONE: (503) 252-3453 · FAX: (503) 252-3454
EMAIL: BUILDERSDESIGN@GMAIL.COM

All ideas, arrangements, drawings and plans set forth on this sheet are the original work product of, owned by and are the property of Builders Design Inc., an Oregon corporation, and use of this said work product is limited to a specified project for the persons named hereon, and for the construction of one building. Any use, reuse or disclosure of said plans, reproductions or project, ideas, designs and / or arrangements, other than by Builders Design Inc., is strictly prohibited without the written permission of Builders Design Inc. Written dimensions on these drawings shall have precedence over scaled dimensions; contractors shall verify, and be responsible for all dimensions and conditions on the job and this office must be notified of any variations from the dimensions and conditions shown by these drawings. Shop details must be submitted to this office for approval before proceeding with fabrication. Supervision is not included unless specified in work contract.

SENTAUR CONSTRUCTION
3316 SE Evergreen St, Milwaukie, OR 97222

FOUNDATION PLAN

No.	Date	Issued by

Project number:	13844
Date:	2/2/2026 4:57:52 PM
Drawn by:	CHT
Area:	2,311 ft²
Scale	As indicated

SUPPORT 6X BEAMS AND 5 1/2" GLB'S WITH 4X6 POST, MINIMUM.
- SUPPORT 4X BEAMS AND 3 1/8" GLB'S WITH 4X4 POST, MINIMUM.
- ALL 2X AND 4X FRAMING SHALL BE DF-L NO. 2 MINIMUM.
- ALL 6X FRAMING SHALL BE DF-L NO.1 MINIMUM.
- EXTERIOR DOORS AND WINDOWS ARE TO BE PROVIDED WITH 4x10 HEADERS, U.N.O.
- ALL EXTERIOR HEADERS SHALL BE SUPPORTED WITH 2X6 STUD AND KING STUDS AS LISTED IN TABLE 602.7.5, TYPICAL.
- INTERIOR NON-LOAD-BEARING HEADERS SHALL BE (2)2X6 U.N.O. SUPPORT WITH (2)2X4 STUDS, MAX SPAN=3'-0".
- EVERY ROOF TRUSS SHALL BE CONNECTED TO WALL TOP PLATES WITH SIMPSON H2.5A UPLIFT CLIPS.
- SIMPSON TOP FLANGE HANGERS SHALL BE TYPE LB, BA(MIN), OR HU.
- FACE MOUNT HANGERS SHALL BE LUC OR HUC TYPE HANGERS.
- ALL METAL HARDWARE IN CONTACT WITH PRESSURE TREATED WOOD SHALL BE HOT-DIPPED-GALVANIZED OR ZINC-COATED.
- 6X BEAM TO 6X6 POST CONNECTOR SHALL BE SIMPSON ACE6(MIN).
- 4X BEAM TO 4X POST CONNECTOR SHALL BE SIMPSON LCE4.
- EXTERIOR WALLS AT STAIRWELLS ARE TO BE BALLOON FRAMED FROM BOTTOM SOLE PLATE TO DOUBLE TOP PLATE.

R602.7.5 SUPPORTS FOR HEADERS

- HEADERS SHALL BE SUPPORTED ON EACH END WITH ONE OR MORE JACK STUDS OR WITH APPROVED FRAMING ANCHORS. THE FULL-HEIGHT STUD ADJACENT TO EACH END OF THE HEADER SHALL BE END NAILED TO EACH END OF THE HEADER WITH (4) 16d NAILS. THE MINIMUM NUMBER OF

TABLE R602.7.5.
MINIMUM NUMBER OF FULL HEIGHT STUDS AT EACH END OF HEADERS IN EXTERIOR WALLS

HEADER SPAN (FEET)	
< 3'	1
4'	2
8'	3
12'	5
16'	6

FRAMING LEGEND
1/4" = 1'-0"

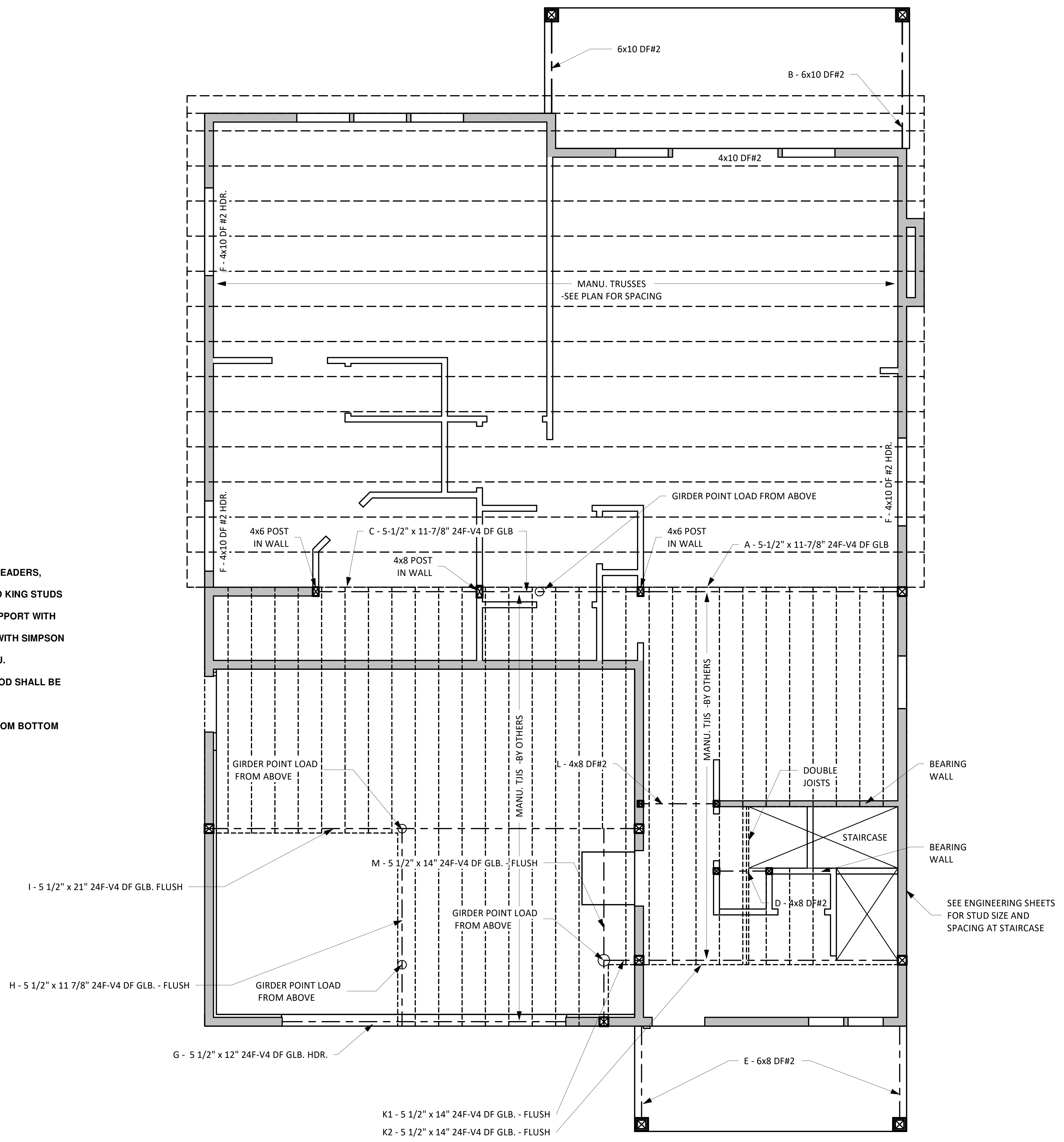

6x10 DF#2
B - 6x10 DF#2
4x10 DF#2
F - 4x10 DF #2 HDR.
MANU. TRUSSES
SEE PLAN FOR SPACING
F - 4x10 DF #2 HDR.
F - 4x10 DF #2 HDR.
GIRDER POINT LOAD FROM ABOVE
4x6 POST
IN WALL
C - 5-1/2" x 11-7/8" 24F-V4 DF GLB
4x8 POST
IN WALL
4x6 POST
IN WALL
A - 5-1/2" x 11-7/8" 24F-V4 DF GLB
MANU. TJIS -BY OTHERS
MANU. TJIS -BY OTHERS
GIRDER POINT LOAD
FROM ABOVE
L - 4x8 DF#2
DOUBLE
JOISTS
BEARING
WALL
STAIRCASE
BEARING
WALL
I - 5 1/2" x 21" 24F-V4 DF GLB. FLUSH
M - 5 1/2" x 14" 24F-V4 DF GLB. - FLUSH
D - 4x8 DF#2
SEE ENGINEERING SHEETS
FOR STUD SIZE AND
SPACING AT STAIRCASE
GIRDER POINT LOAD
FROM ABOVE
H - 5 1/2" x 11 7/8" 24F-V4 DF GLB. - FLUSH
GIRDER POINT LOAD
FROM ABOVE
G - 5 1/2" x 12" 24F-V4 DF GLB. HDR.
E - 6x8 DF#2
K1 - 5 1/2" x 14" 24F-V4 DF GLB. - FLUSH
K2 - 5 1/2" x 14" 24F-V4 DF GLB. - FLUSH

1 FRAMING PLAN
4 1/4" = 1'-0"

BUILDERS DESIGN INC
COMMERCIAL · RESIDENTIAL · REMODELING
11125 NE WEIDLER ST. · PORTLAND, OR 97220
PHONE: (503) 252-3453 · FAX: (503) 252-3454
EMAIL: BUILDERSDESIGN@GMAIL.COM

All ideas, arrangements, drawings and plans set forth on this sheet are the original work product of, owned by and are the property of Builders Design Inc., an Oregon corporation, and use of this said work product is limited to a specified project for the persons named hereon, and for the construction of one building. Any use, reuse or disclosure of said plans, reproductions or project, ideas, designs and / or arrangements, other than by Builders Design Inc., is strictly prohibited without the written permission of Builders Design Inc. Written dimensions on these drawings shall have precedence over scaled dimensions; contractors shall verify, and be responsible for all dimensions and conditions on the job and this office must be notified of any variations from the dimensions and conditions shown by these drawings. Shop details must be submitted to this office for approval before proceeding with fabrication. Supervision is not included unless specified in work contract.

SENTAUR CONSTRUCTION
3316 SE Evergreen St. Milwaukie, OR 97222

FRAMING PLANS

No.	Date	Issued by

Project number:	13844
Date:	2/2/2026 4:57:52 PM
Drawn by:	CHT
Area:	2,311 ft²
Scale	1/4" = 1'-0"

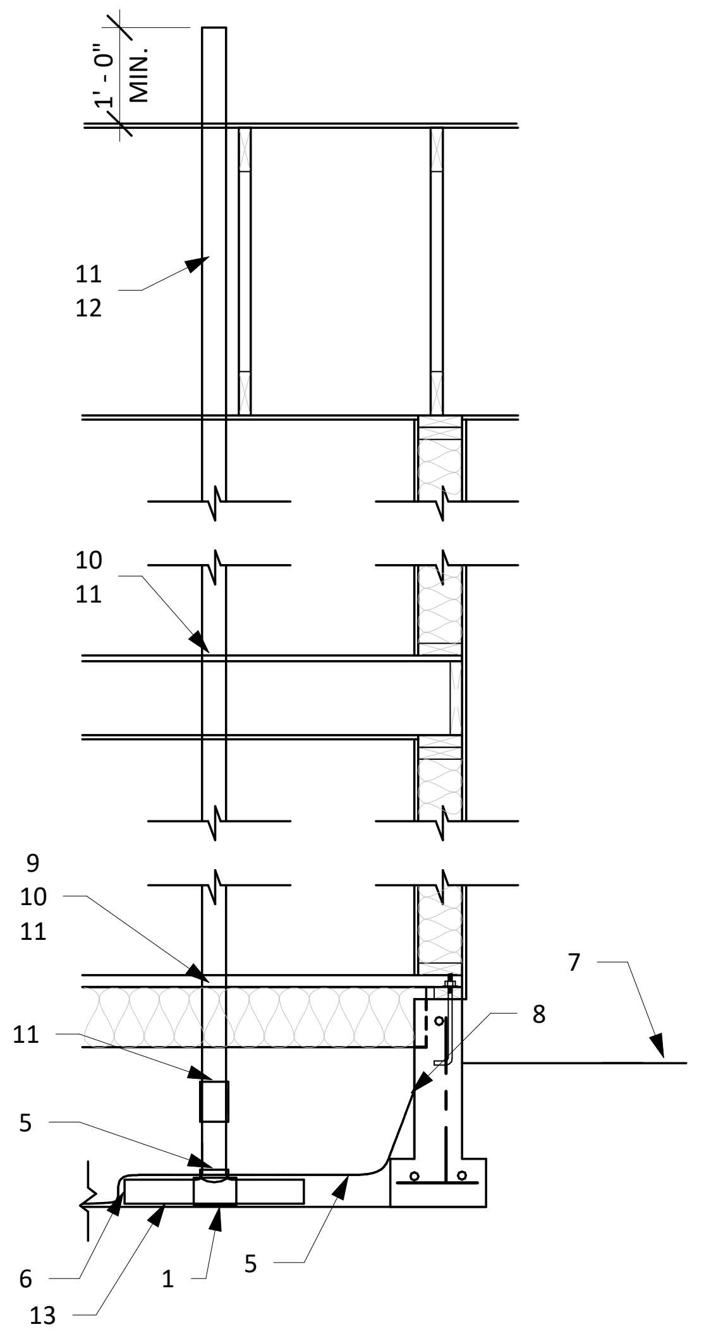
1' - 0" MIN.
11
12
10
11
9
10
11
7
8
11
5
6
13
1
5

RADON CONTROL NOTES
1 . 3" OR 4" PLUMBING TEE UNDER 6-MIL VAPOR BARRIER
2. 3" OR 4" PLUMBING TEE IN 4" CLEAN AGGREGATE UNDER SLAB. SIZE OF AGGREGATE 2" MAX, 1/4" MIN.
3. 3" OR 4" PERFORATED PIPE.
4. 3" OR 4" VENT PIPE UNDER CONCRETE SLAB. THIS VENT SHALL BE EXTENDED AND TERMINATED 12" ABOVE THE ROOF OR CONNECTED TO THE VENT PIPE FROM THE CRAWL SPACE
5. SEAL VENT TO VAPOR BARRIER BY TAPING OR OTHER MEANS SUCH AS A HOSE CLAMP.
6. 6 MIL. POLYETHYLENE OR EQUIVALENT FLEXIBLE SHEETING MATERIAL. THE JOINTS SHALL BE LAPPED 12" AND SEALED OR TAPED.
7. CONCRETE SLAB ON GRADE.
8. MEMBRANE SHALL BE SEALED AGAINST WALL WITH BEAD OF CAULK OR ADHESIVE.
9. SEAL THE PENETRATION.
10. 3" OR 4" PIPE VENT SHALL BE EXTENDED AND TERMINATED 12" ABOVE THE ROOF
11. ALL EXPOSED AND VISIBLE INTERIOR RADON VENT PIPES SHALL BE IDENTIFIED WITH AT LEAST ONE LABEL AT EACH FLOOR AND IN AN ACCESSIBLE ATTIC. THE LABEL SHALL READ "RADON DEDUCTION SYSTEM
12. PROVIDE AN ELECTRICAL CIRCUIT TERMINATED IN AN APPROVED BOX FOR FUTURE INSTALLATION OF AN ACTIVE RADON MITIGATION SYSTEM AND A SYSTEM FAILURE ALARM.
13. THE SOIL-GAS COLLECTOR SHALL CONSIST OF NOT LESS THAN A 3-INCH DIAMETER (76 MM) PERFORATED PIPE. THE PIPE SHALL BE NOT LESS THAN 10 FEET (3048 MM) IN TOTAL LENGTH, WITH NOT LESS THAN 5 FEET (1524 MM) OF PERFORATED PIPE EXTENDING FROM THE POINT OF CONNECTION TO THE VERTICAL VENT PIPE. SUCH PIPE SHALL BE PLACED IN A TRENCH BACKFILLED WITH CLEAN AGGREGATE MEETING THE CRITERIA OF SECTION AF103.2, ITEM 1 SUCH THAT THE PIPE IS COMPLETELY SURROUNDED BY NOT LESS THAN 4 INCHES (102 MM) OF AGGREGATE.

7 | 5 RADON CONTROL VENT IN CRAWL SPACE
1/2" = 1'-0"

COMP. ROOFING ON 30# FELT ON 1/2" CDX PLY. WD. ON MANU. ROOF TRUSSES @ 24" O.C.	
ROOF VENTS	☐
S.M. GUTTERS	▭
LINE OF WALLS BELOW	‐ ‐ ‐ ‐

NOTES
- ALL GIRDER TRUSSES ARE TO BE SUPPORTED BY MINIMUM (3) 2x6 STUDS W/ 16d NAILS @ 6" O.C. STAGGERED U.N.O.

ATTIC VENTILATION REQUIRED: THE ATTIC AREA MUST BE 1/150 OF THE AREA OF THE SPACE VENTILATED
- ATTIC SPACE IS 2,020 S.F. ATTIC AREA - 2,020 S.F. / 150 = 13.46

ATTIC MUST PROVIDE **13.46** NFA TOTAL
- ROOFTOP ATTIC VENTS MUST PROVIDE MIN. 60 SQ. IN. (0.416 S.F.)

ATTIC VENTS - 20 ATTIC VENTS * 0.416 = **8.32** S.F.
EAVE VENTS - .10 S.F. PER EAVE BLOCK PROVIDED - 54 EAVE BLOCKS REQUIRED = 5.4 S.F.
TOTAL VENTILATION PROVIDED = **13.72** NFA PROVIDED

EAVE BLOCKING

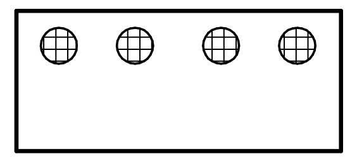

4-VENT BLOCK
(4) 2.5" DIA. HOLES
(14.6 SQ. IN. EACH)

ROOF PLAN LEGEND
1/4" = 1'-0"

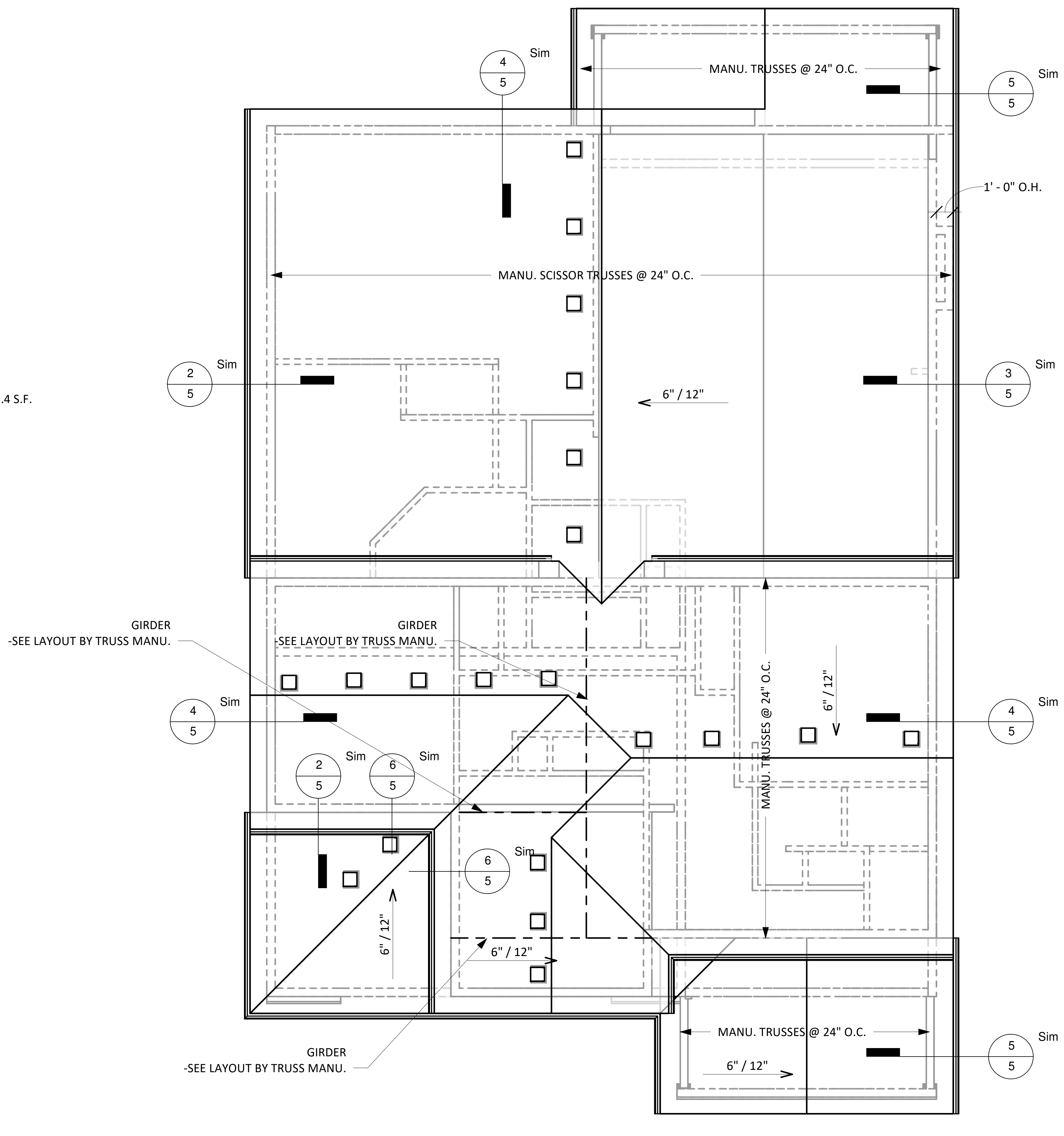
4
5
Sim
MANU. TRUSSES @ 24" O.C.
5
5
Sim
1' - 0" O.H.
MANU. SCISSOR TRUSSES @ 24" O.C.
2
5
Sim
6" / 12"
3
5
Sim
GIRDER
-SEE LAYOUT BY TRUSS MANU.
GIRDER
-SEE LAYOUT BY TRUSS MANU.
4
5
Sim
6" / 12"
MANU. TRUSSES @ 24" O.C.
4
5
Sim
2
5
Sim
6
5
Sim
6
5
Sim
6" / 12"
6" / 12"
GIRDER
-SEE LAYOUT BY TRUSS MANU.
MANU. TRUSSES @ 24" O.C.
6" / 12"
5
5
Sim

1 | 5 ROOF PLAN
3/16" = 1'-0"

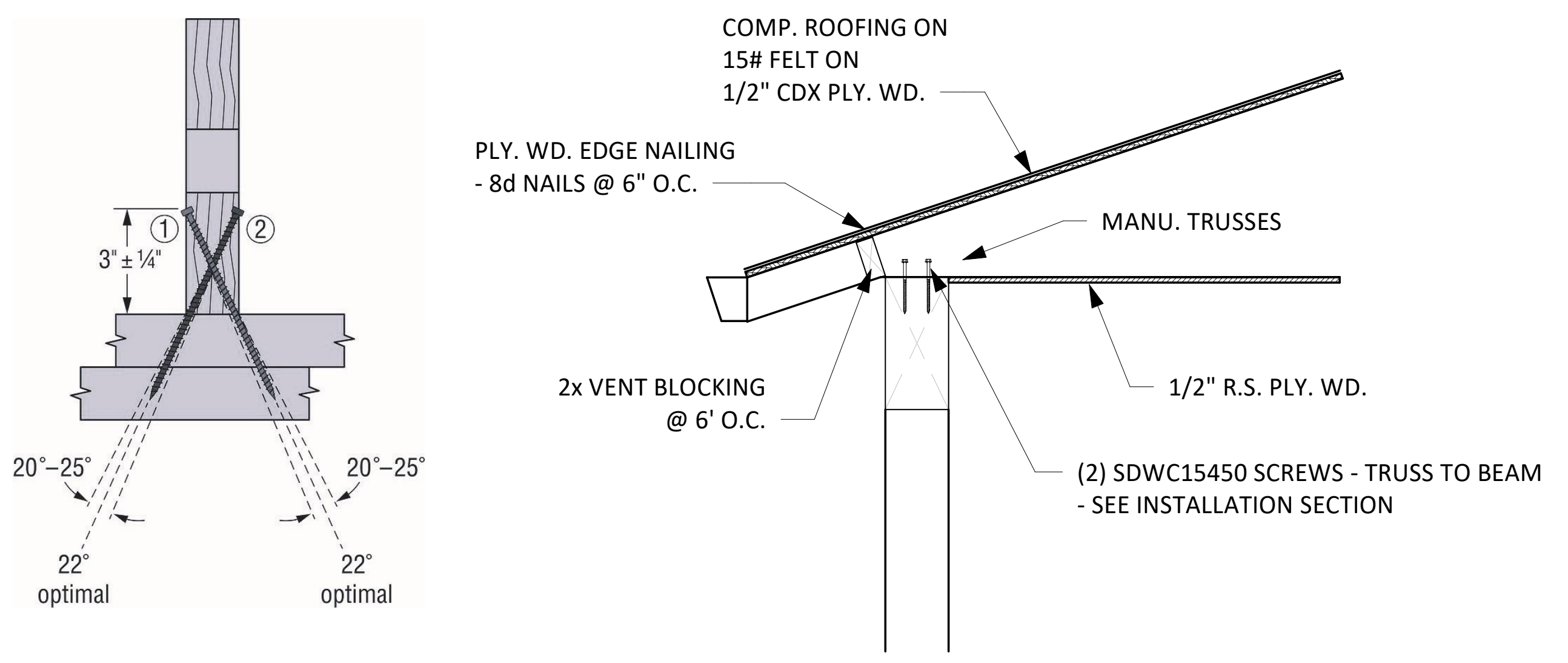
①
②
3" ± ¼"
20°–25°
20°–25°
22° optimal
22° optimal
COMP. ROOFING ON 15# FELT ON 1/2" CDX PLY. WD.
PLY. WD. EDGE NAILING - 8d NAILS @ 6" O.C.
MANU. TRUSSES
2x VENT BLOCKING @ 6' O.C.
1/2" R.S. PLY. WD.
(2) SDWC15450 SCREWS - TRUSS TO BEAM - SEE INSTALLATION SECTION

5 | 5 PATIO TRUSS TO BEAM
3/4" = 1'-0"

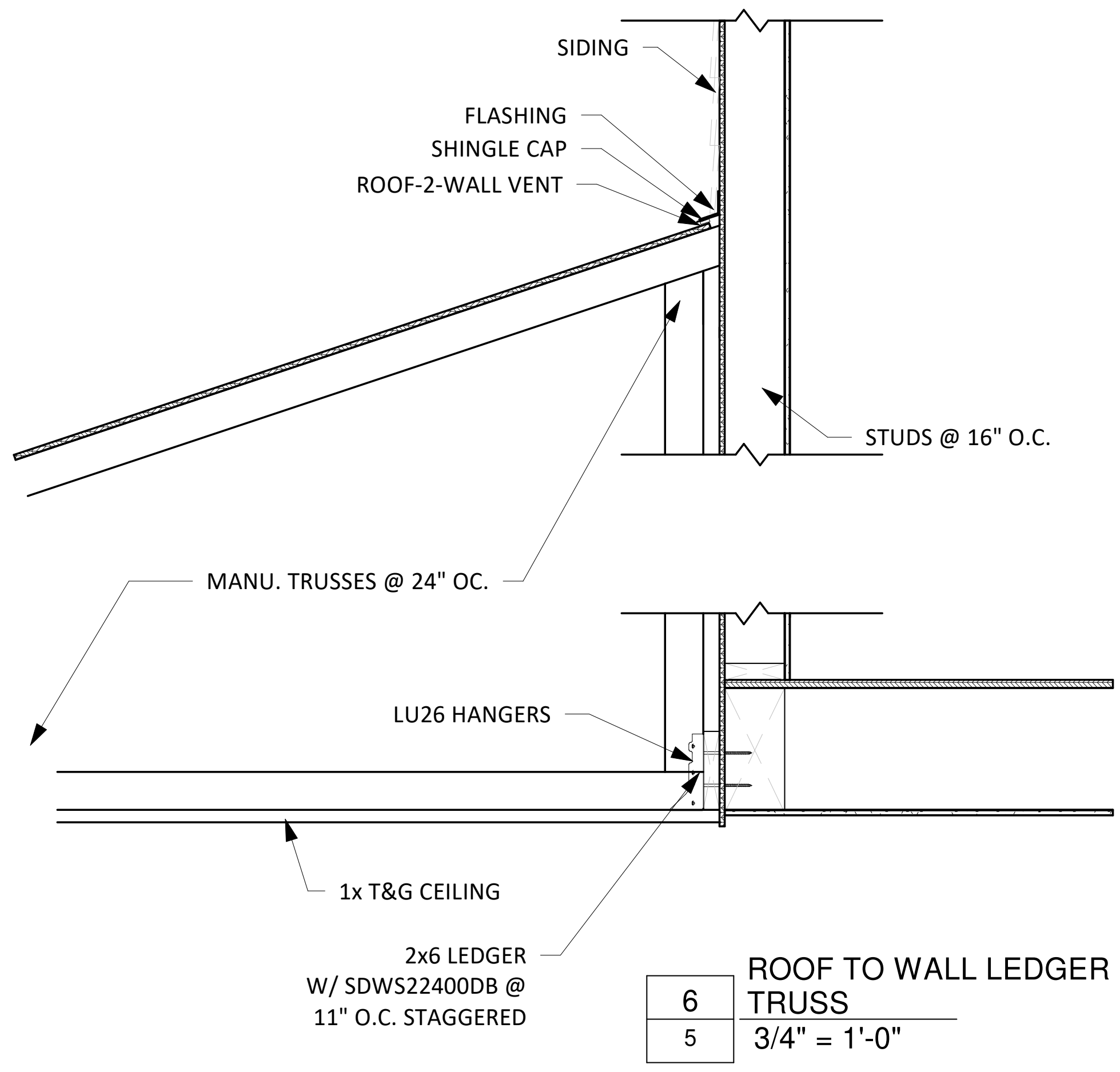
SIDING
FLASHING
SHINGLE CAP
ROOF-2-WALL VENT
STUDS @ 16" O.C.
MANU. TRUSSES @ 24" OC.
LU26 HANGERS
1x T&G CEILING
2x6 LEDGER W/ SDWS22400DB @ 11" O.C. STAGGERED

6 | 5 ROOF TO WALL LEDGER - TRUSS
3/4" = 1'-0"

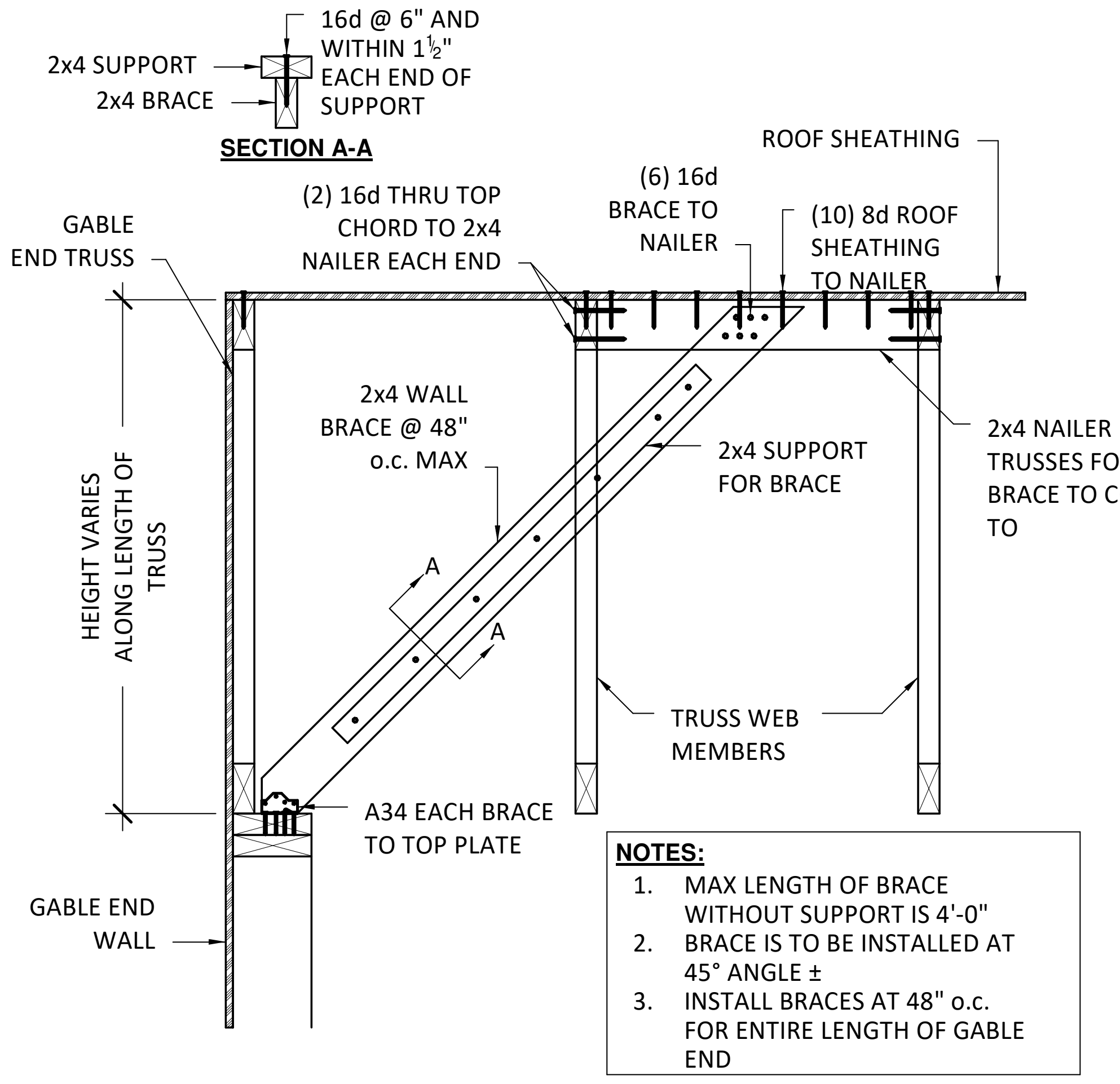
16d @ 6" AND WITHIN 1½" EACH END OF SUPPORT
2x4 SUPPORT
2x4 BRACE
SECTION A-A
ROOF SHEATHING
GABLE END TRUSS
(2) 16d THRU TOP CHORD TO 2x4 NAILER EACH END
(6) 16d BRACE TO NAILER
(10) 8d ROOF SHEATHING TO NAILER
HEIGHT VARIES ALONG LENGTH OF TRUSS
2x4 WALL BRACE @ 48" o.c. MAX
2x4 SUPPORT FOR BRACE
2x4 NAILER BETWEEN TRUSSES FOR BRACE TO CONNECT TO
A
A
TRUSS WEB MEMBERS
A34 EACH BRACE TO TOP PLATE
GABLE END WALL

NOTES:
1. MAX LENGTH OF BRACE WITHOUT SUPPORT IS 4'-0"
2. BRACE IS TO BE INSTALLED AT 45° ANGLE ±
3. INSTALL BRACES AT 48" o.c. FOR ENTIRE LENGTH OF GABLE END

4 | 5 GABLE END BRACE CONNECTION
1" = 1'-0"

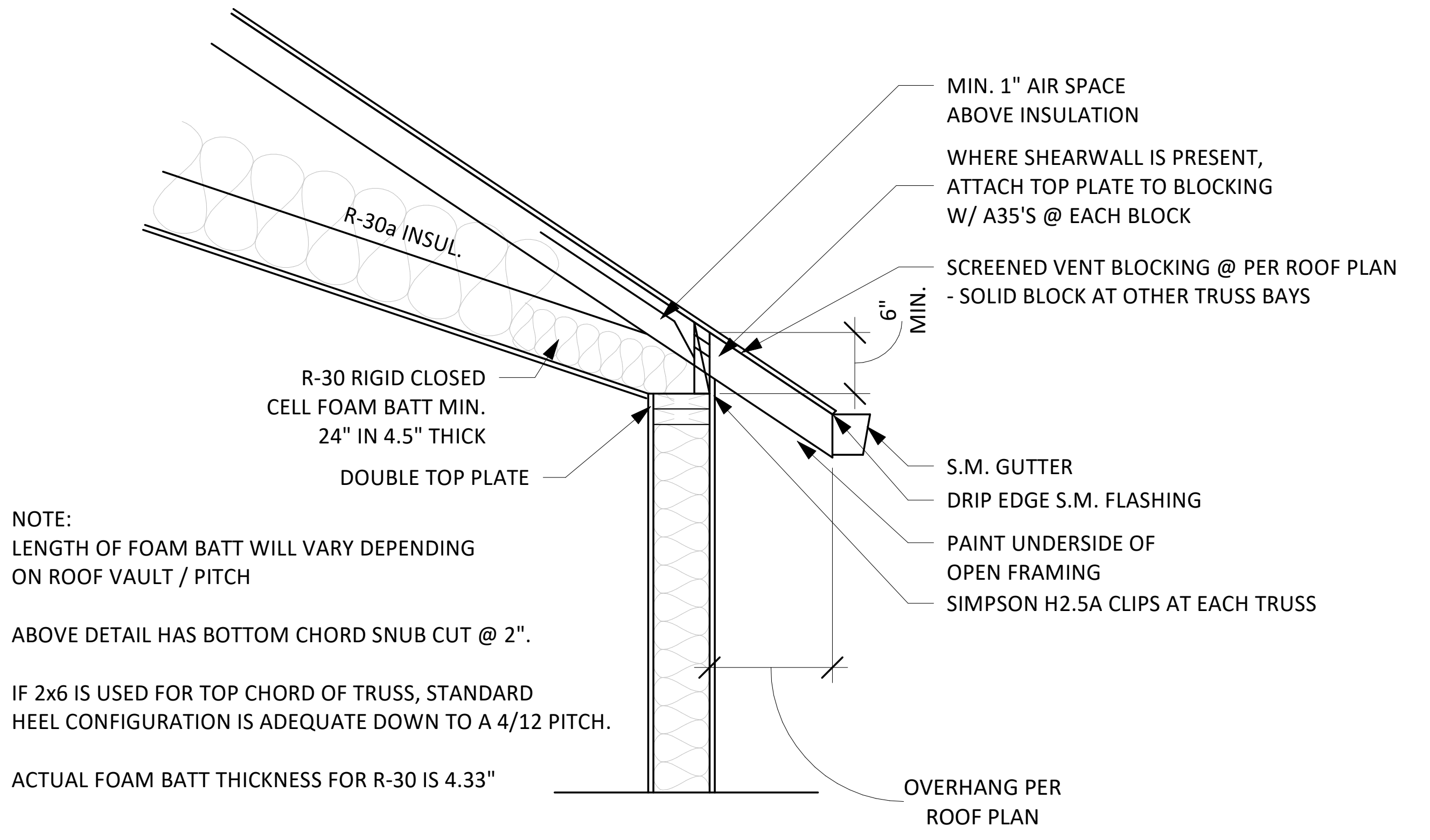
MIN. 1" AIR SPACE ABOVE INSULATION
WHERE SHEARWALL IS PRESENT, ATTACH TOP PLATE TO BLOCKING W/ A35'S @ EACH BLOCK
SCREENED VENT BLOCKING @ PER ROOF PLAN - SOLID BLOCK AT OTHER TRUSS BAYS
6" MIN.
R-30a INSUL.
R-30 RIGID CLOSED CELL FOAM BATT MIN. 24" IN 4.5" THICK
DOUBLE TOP PLATE
S.M. GUTTER
DRIP EDGE S.M. FLASHING
PAINT UNDERSIDE OF OPEN FRAMING
SIMPSON H2.5A CLIPS AT EACH TRUSS
OVERHANG PER ROOF PLAN

NOTE:
LENGTH OF FOAM BATT WILL VARY DEPENDING ON ROOF VAULT / PITCH

ABOVE DETAIL HAS BOTTOM CHORD SNUB CUT @ 2".

IF 2x6 IS USED FOR TOP CHORD OF TRUSS, STANDARD HEEL CONFIGURATION IS ADEQUATE DOWN TO A 4/12 PITCH.

ACTUAL FOAM BATT THICKNESS FOR R-30 IS 4.33"

3 | 5 SCISSOR TRUSS HEEL DETAIL
3/4" = 1'-0"

*NOTE: ENGINEERED CONNECTION DETAILS SUPERCEDE CONNECTORS SHOWN ON THIS DETAIL
- CONTRACTOR TO VERIFY WITH ENGINEERING DRAWINGS

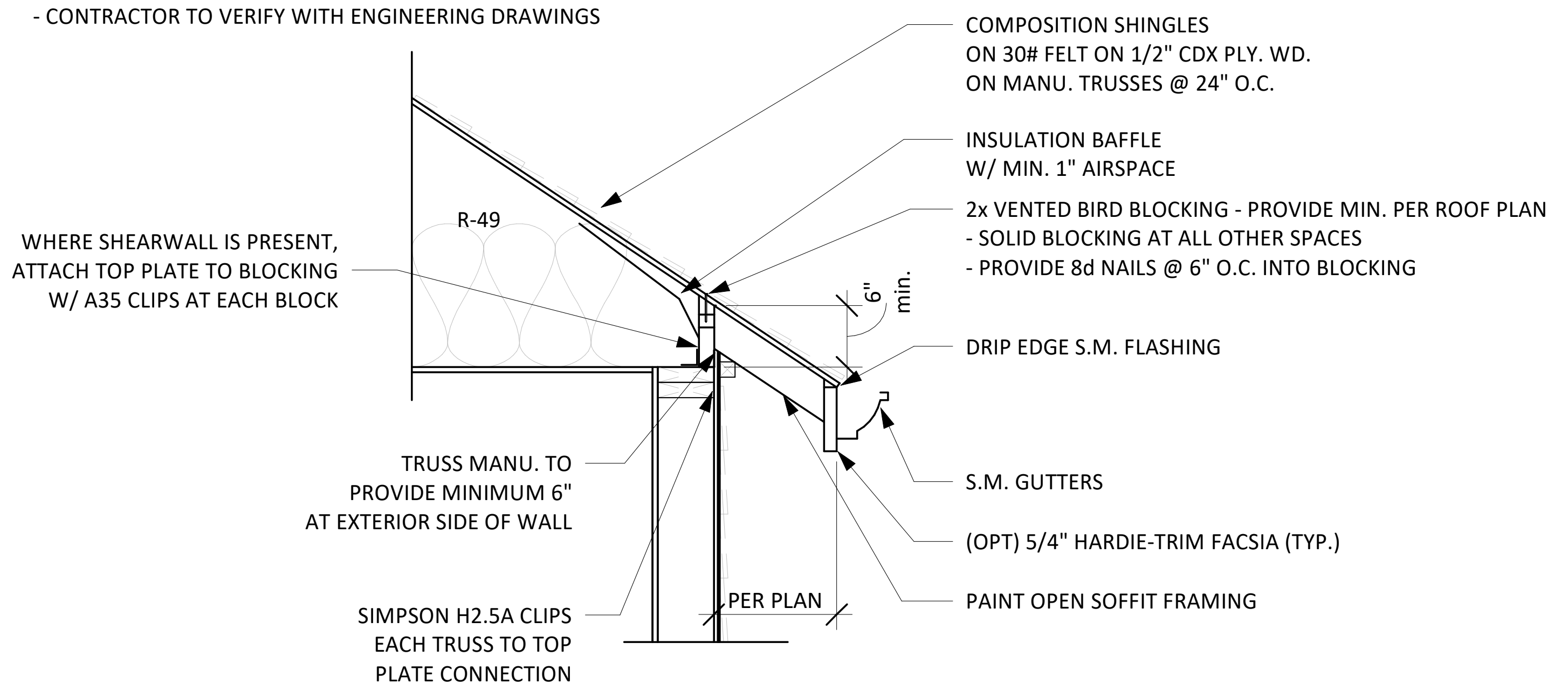
COMPOSITION SHINGLES ON 30# FELT ON 1/2" CDX PLY. WD. ON MANU. TRUSSES @ 24" O.C.
INSULATION BAFFLE W/ MIN. 1" AIRSPACE
2x VENTED BIRD BLOCKING - PROVIDE MIN. PER ROOF PLAN - SOLID BLOCKING AT ALL OTHER SPACES - PROVIDE 8d NAILS @ 6" O.C. INTO BLOCKING
R-49
WHERE SHEARWALL IS PRESENT, ATTACH TOP PLATE TO BLOCKING W/ A35 CLIPS AT EACH BLOCK
6" min.
DRIP EDGE S.M. FLASHING
TRUSS MANU. TO PROVIDE MINIMUM 6" AT EXTERIOR SIDE OF WALL
S.M. GUTTERS
(OPT) 5/4" HARDIE-TRIM FACSIA (TYP.)
SIMPSON H2.5A CLIPS EACH TRUSS TO TOP PLATE CONNECTION
PER PLAN
PAINT OPEN SOFFIT FRAMING

2 | 5 STANDARD TRUSS DETAIL
3/4" = 1'-0"

BUILDERS DESIGN INC
COMMERCIAL · RESIDENTIAL · REMODELING
11125 NE WEIDLER ST. · PORTLAND, OR 97220
PHONE: (503) 252-3453 · FAX: (503) 252-3454
EMAIL: BUILDERSDESIGN@GMAIL.COM

All ideas, arrangements, drawings and plans set forth on this sheet are the original work product of, owned by and are the property of Builders Design Inc., an Oregon corporation, and use of this said work product is limited to a specified project for the persons named hereon, and for the construction of one building. Any use, reuse or disclosure of said plans, reproductions or project, ideas, designs and / or arrangements, other than by Builders Design Inc., is strictly prohibited without the written permission of Builders Design Inc. Written dimensions on these drawings shall have precedence over scaled dimensions; contractors shall verify, and be responsible for all dimensions and conditions on the job and this office must be notified of any variations from the dimensions and conditions shown by these drawings. Shop details must be submitted to this office for approval before proceeding with fabrication. Supervision is not included unless specified in work contract.

SENTAUR CONSTRUCTION
3316 SE Evergreen St, Milwaukie, OR 97222

ROOF PLAN

No.	Date	Issued by

Project number:	13844
Date:	2/2/2026 4:57:53 PM
Drawn by:	CHT
Area:	2,311 ft²
Scale	As indicated

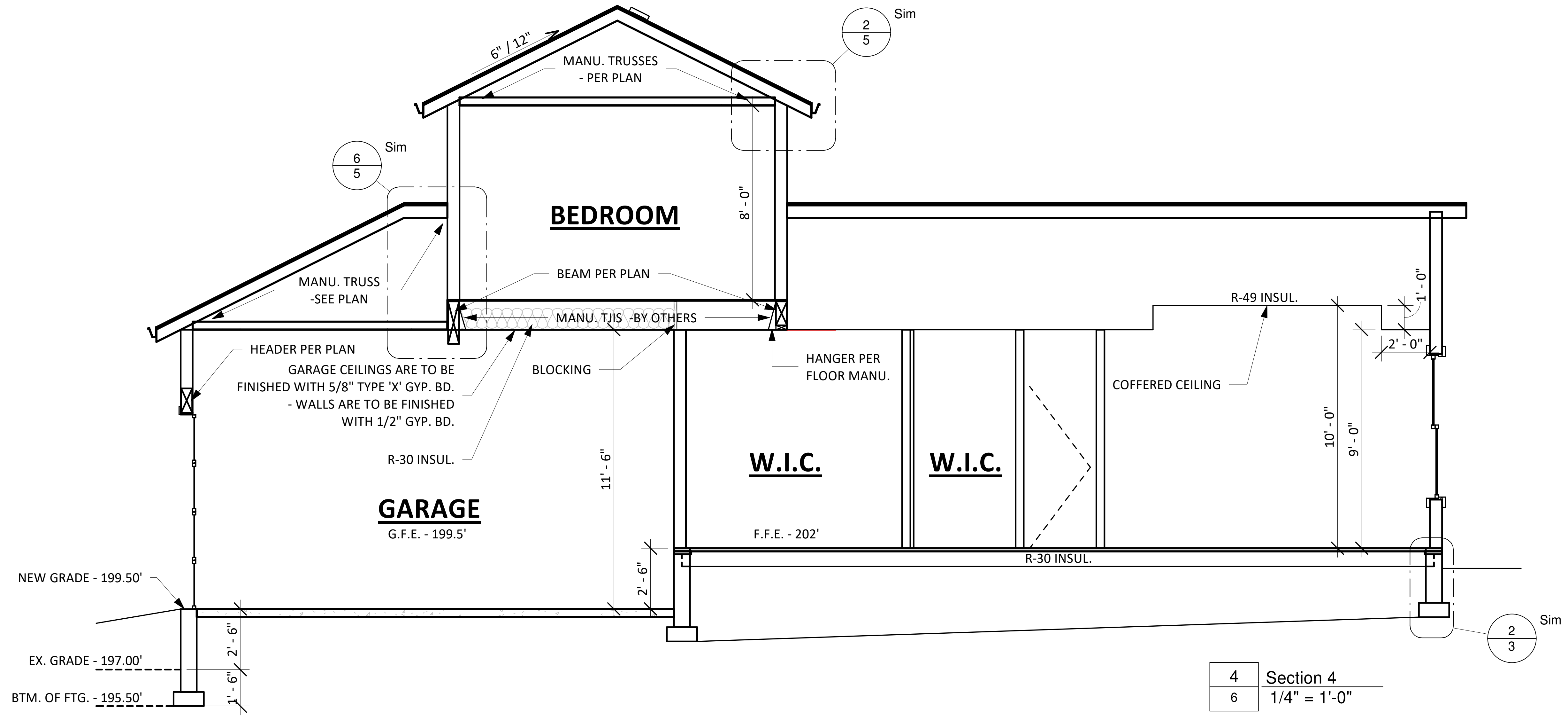
6" / 12"
MANU. TRUSSES
- PER PLAN
BEDROOM
8' - 0"
MANU. TRUSS
-SEE PLAN
BEAM PER PLAN
MANU. TJIS -BY OTHERS
HEADER PER PLAN
GARAGE CEILINGS ARE TO BE
FINISHED WITH 5/8" TYPE 'X' GYP. BD.
- WALLS ARE TO BE FINISHED
WITH 1/2" GYP. BD.
BLOCKING
HANGER PER
FLOOR MANU.
R-49 INSUL.
COFFERED CEILING
R-30 INSUL.
GARAGE
G.F.E. - 199.5'
W.I.C.
W.I.C.
11' - 6"
10' - 0"
9' - 0"
1' - 0"
2' - 0"
2' - 6"
F.F.E. - 202'
R-30 INSUL.
NEW GRADE - 199.50'
EX. GRADE - 197.00'
BTM. OF FTG. - 195.50'
2' - 6"
1' - 6"
2
5
Sim
6
5
Sim
2
3
Sim

4 Section 4
6 1/4" = 1'-0"

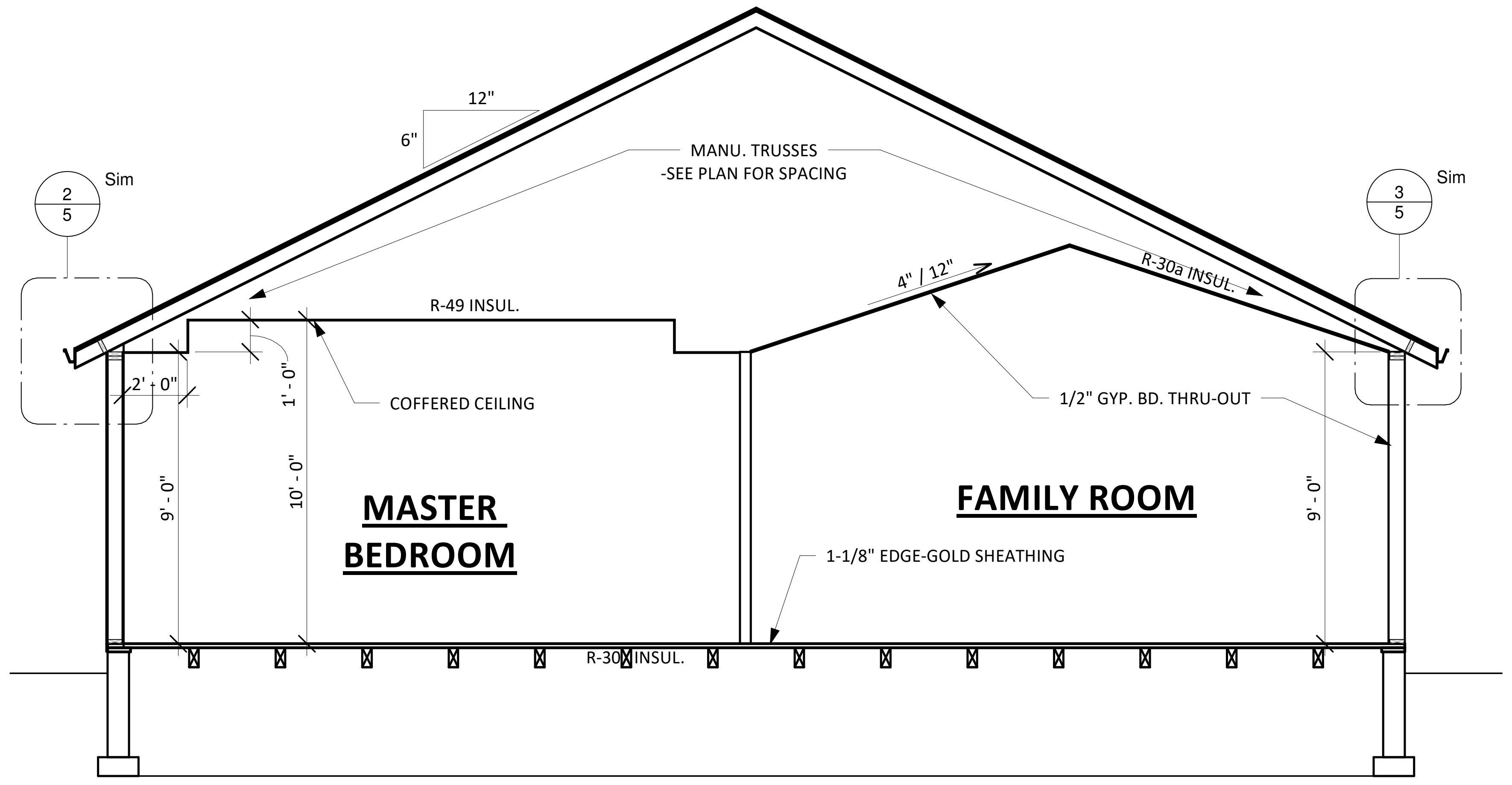
12"
6"
MANU. TRUSSES
-SEE PLAN FOR SPACING
R-49 INSUL.
4" / 12"
R-30# INSUL.
2' - 0"
1' - 0"
COFFERED CEILING
1/2" GYP. BD. THRU-OUT
MASTER
BEDROOM
FAMILY ROOM
10' - 0"
9' - 0"
9' - 0"
1-1/8" EDGE-GOLD SHEATHING
R-30 INSUL.
2
5
Sim
3
5
Sim

1 Section 1
6 1/4" = 1'-0"

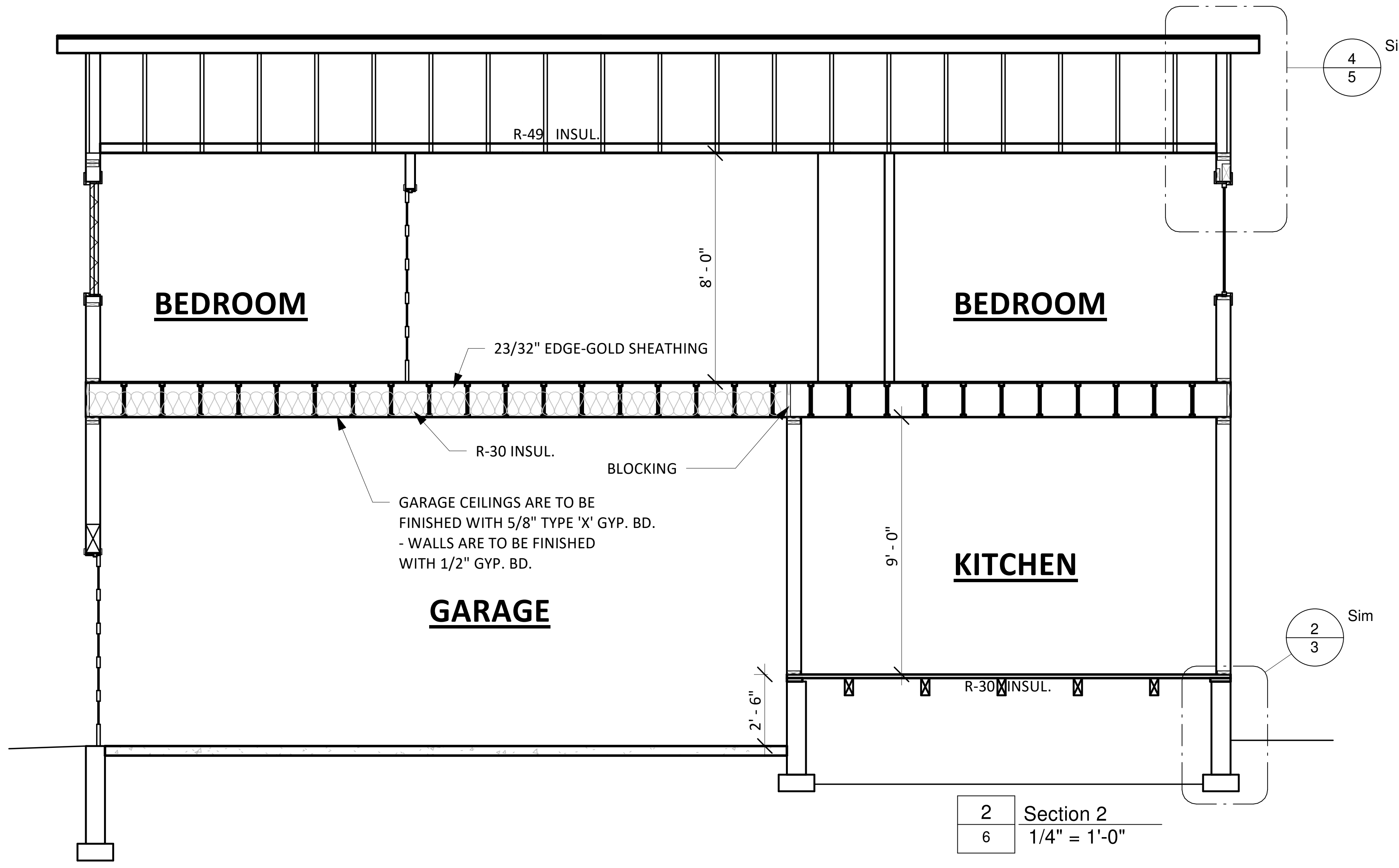
R-49 INSUL.
4
5
Sim
BEDROOM
BEDROOM
8' - 0"
23/32" EDGE-GOLD SHEATHING
R-30 INSUL.
BLOCKING
GARAGE CEILINGS ARE TO BE
FINISHED WITH 5/8" TYPE 'X' GYP. BD.
- WALLS ARE TO BE FINISHED
WITH 1/2" GYP. BD.
GARAGE
KITCHEN
9' - 0"
R-30 INSUL.
2' - 6"
2
3
Sim

2 Section 2
6 1/4" = 1'-0"

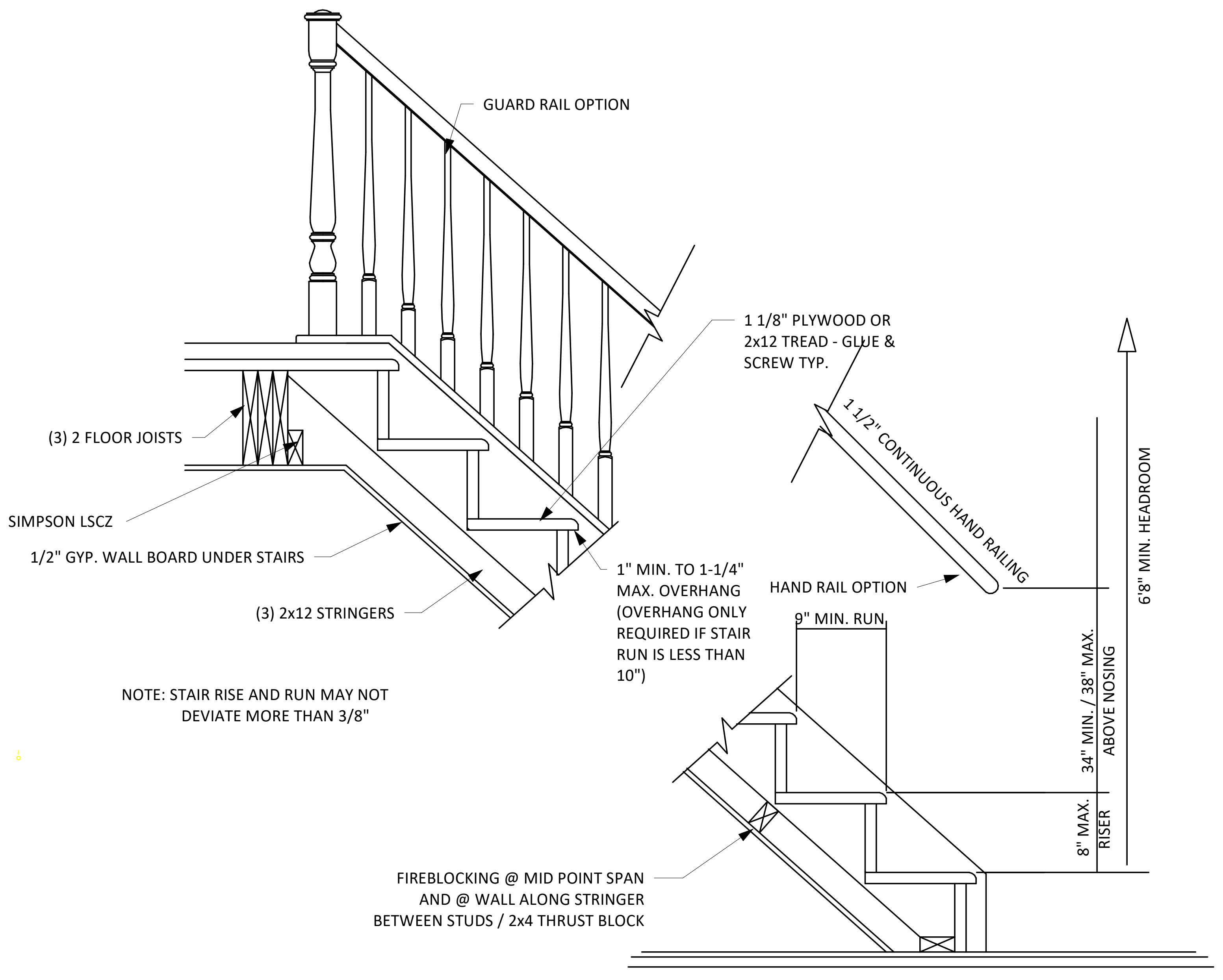
GUARD RAIL OPTION
1 1/8" PLYWOOD OR
2x12 TREAD - GLUE &
SCREW TYP.
(3) 2 FLOOR JOISTS
SIMPSON LSCZ
1/2" GYP. WALL BOARD UNDER STAIRS
(3) 2x12 STRINGERS
1" MIN. TO 1-1/4"
MAX. OVERHANG
(OVERHANG ONLY
REQUIRED IF STAIR
RUN IS LESS THAN
10")
1 1/2" CONTINUOUS HAND RAILING
HAND RAIL OPTION
9" MIN. RUN
6'8" MIN. HEADROOM
34" MIN. / 38" MAX.
ABOVE NOSING
8" MAX.
RISER
FIREBLOCKING @ MID POINT SPAN
AND @ WALL ALONG STRINGER
BETWEEN STUDS / 2x4 THRUST BLOCK

NOTE: STAIR RISE AND RUN MAY NOT DEVIATE MORE THAN 3/8"

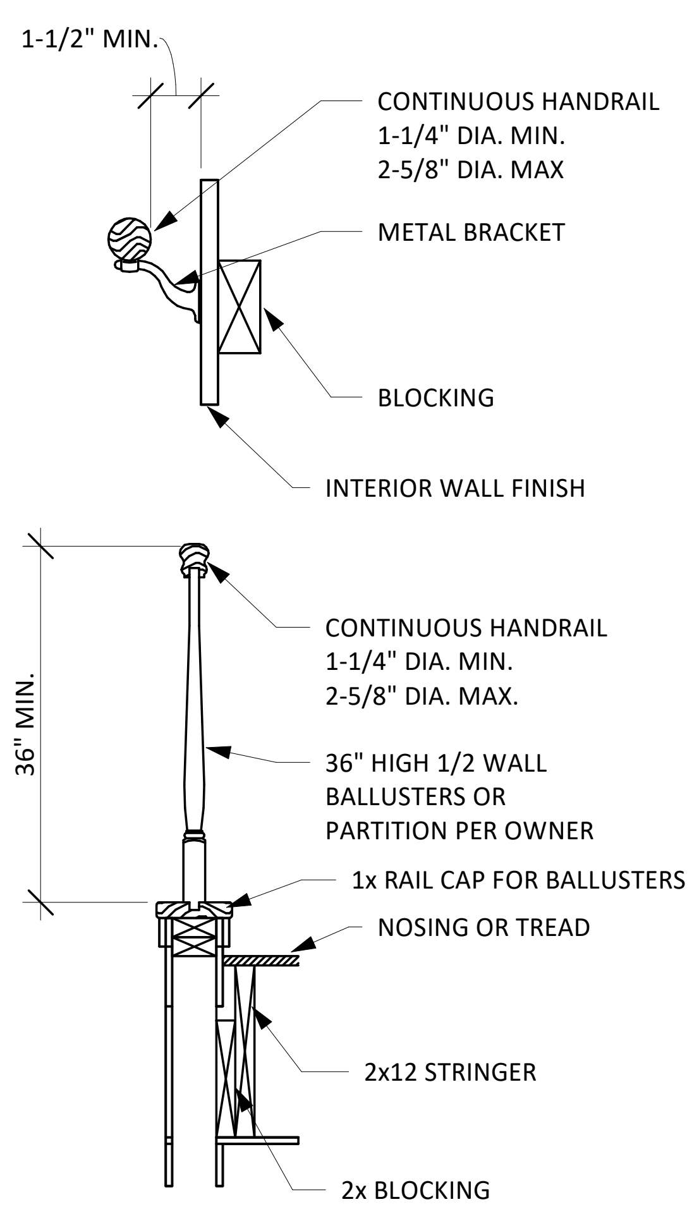
1-1/2" MIN.
CONTINUOUS HANDRAIL
1-1/4" DIA. MIN.
2-5/8" DIA. MAX
METAL BRACKET
BLOCKING
INTERIOR WALL FINISH
36" MIN.
CONTINUOUS HANDRAIL
1-1/4" DIA. MIN.
2-5/8" DIA. MAX.
36" HIGH 1/2 WALL
BALLUSTERS OR
PARTITION PER OWNER
1x RAIL CAP FOR BALLUSTERS
NOSING OR TREAD
2x12 STRINGER
2x BLOCKING

5 STAIR DETAIL
6 1/4" = 1'-0"

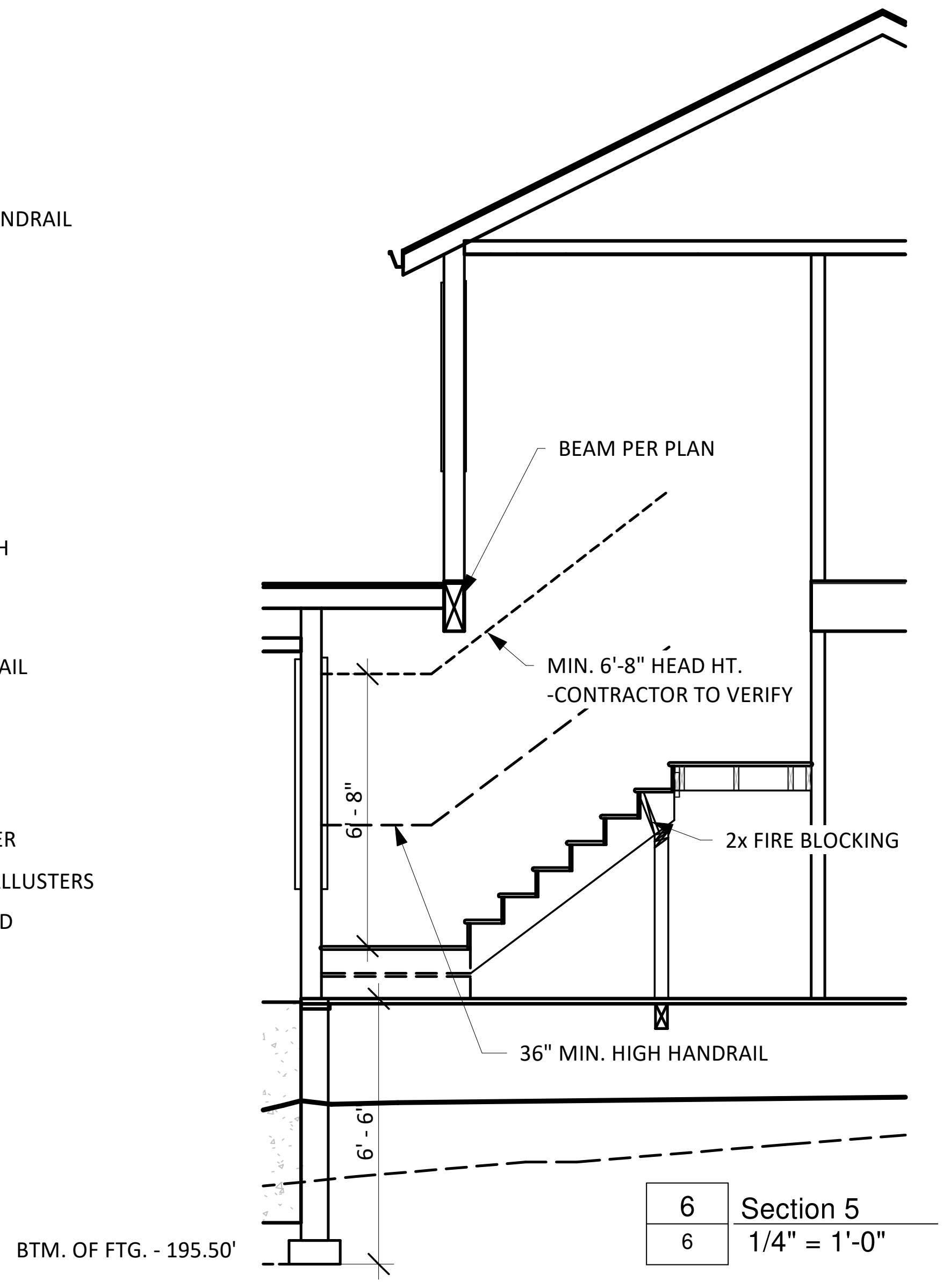
BEAM PER PLAN
MIN. 6'-8" HEAD HT.
-CONTRACTOR TO VERIFY
6' - 8"
2x FIRE BLOCKING
36" MIN. HIGH HANDRAIL
6' - 6"
BTM. OF FTG. - 195.50'

6 Section 5
6 1/4" = 1'-0"

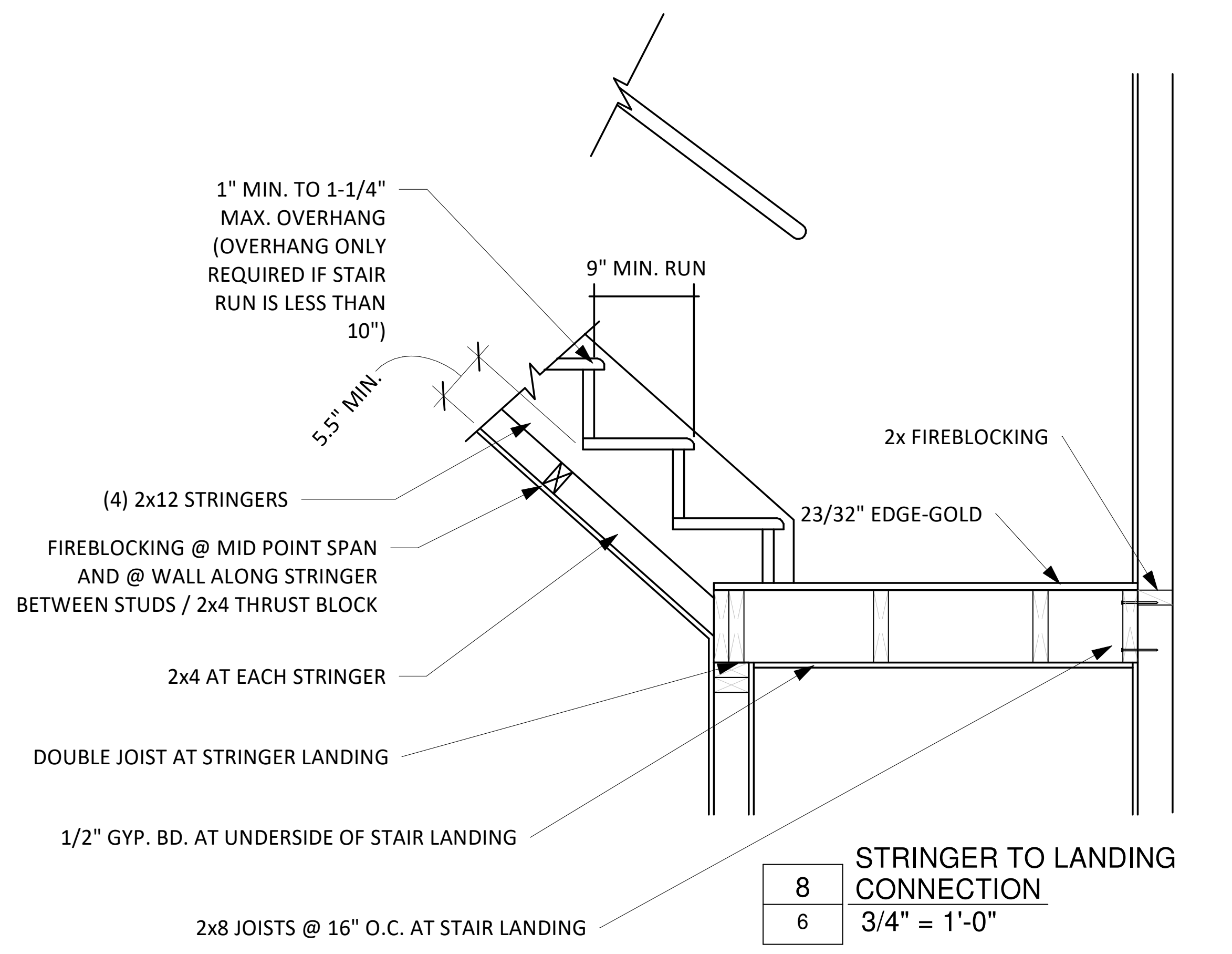
1" MIN. TO 1-1/4"
MAX. OVERHANG
(OVERHANG ONLY
REQUIRED IF STAIR
RUN IS LESS THAN
10")
9" MIN. RUN
5.5" MIN.
2x FIREBLOCKING
23/32" EDGE-GOLD
(4) 2x12 STRINGERS
FIREBLOCKING @ MID POINT SPAN
AND @ WALL ALONG STRINGER
BETWEEN STUDS / 2x4 THRUST BLOCK
2x4 AT EACH STRINGER
DOUBLE JOIST AT STRINGER LANDING
1/2" GYP. BD. AT UNDERSIDE OF STAIR LANDING
2x8 JOISTS @ 16" O.C. AT STAIR LANDING

8 STRINGER TO LANDING CONNECTION
6 3/4" = 1'-0"

NOTE: STAIR RISE AND RUN MAY NOT DEVIATE MORE THAN 3/8"

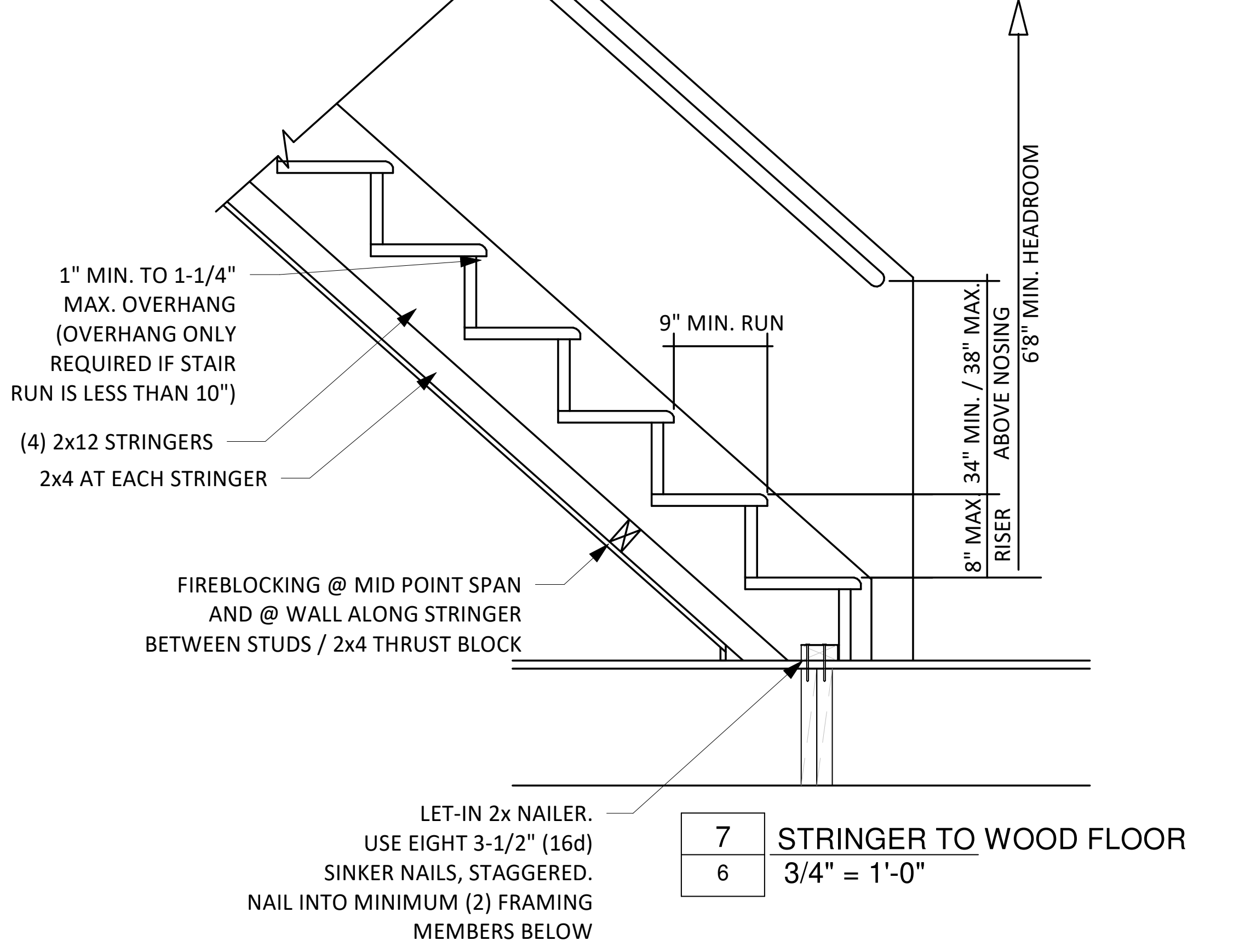
1" MIN. TO 1-1/4"
MAX. OVERHANG
(OVERHANG ONLY
REQUIRED IF STAIR
RUN IS LESS THAN 10")
(4) 2x12 STRINGERS
2x4 AT EACH STRINGER
9" MIN. RUN
6'8" MIN. HEADROOM
34" MIN. / 38" MAX.
ABOVE NOSING
8" MAX.
RISER
FIREBLOCKING @ MID POINT SPAN
AND @ WALL ALONG STRINGER
BETWEEN STUDS / 2x4 THRUST BLOCK
LET-IN 2x NAILER.
USE EIGHT 3-1/2" (16d)
SINKER NAILS, STAGGERED.
NAIL INTO MINIMUM (2) FRAMING
MEMBERS BELOW

7 STRINGER TO WOOD FLOOR
6 3/4" = 1'-0"

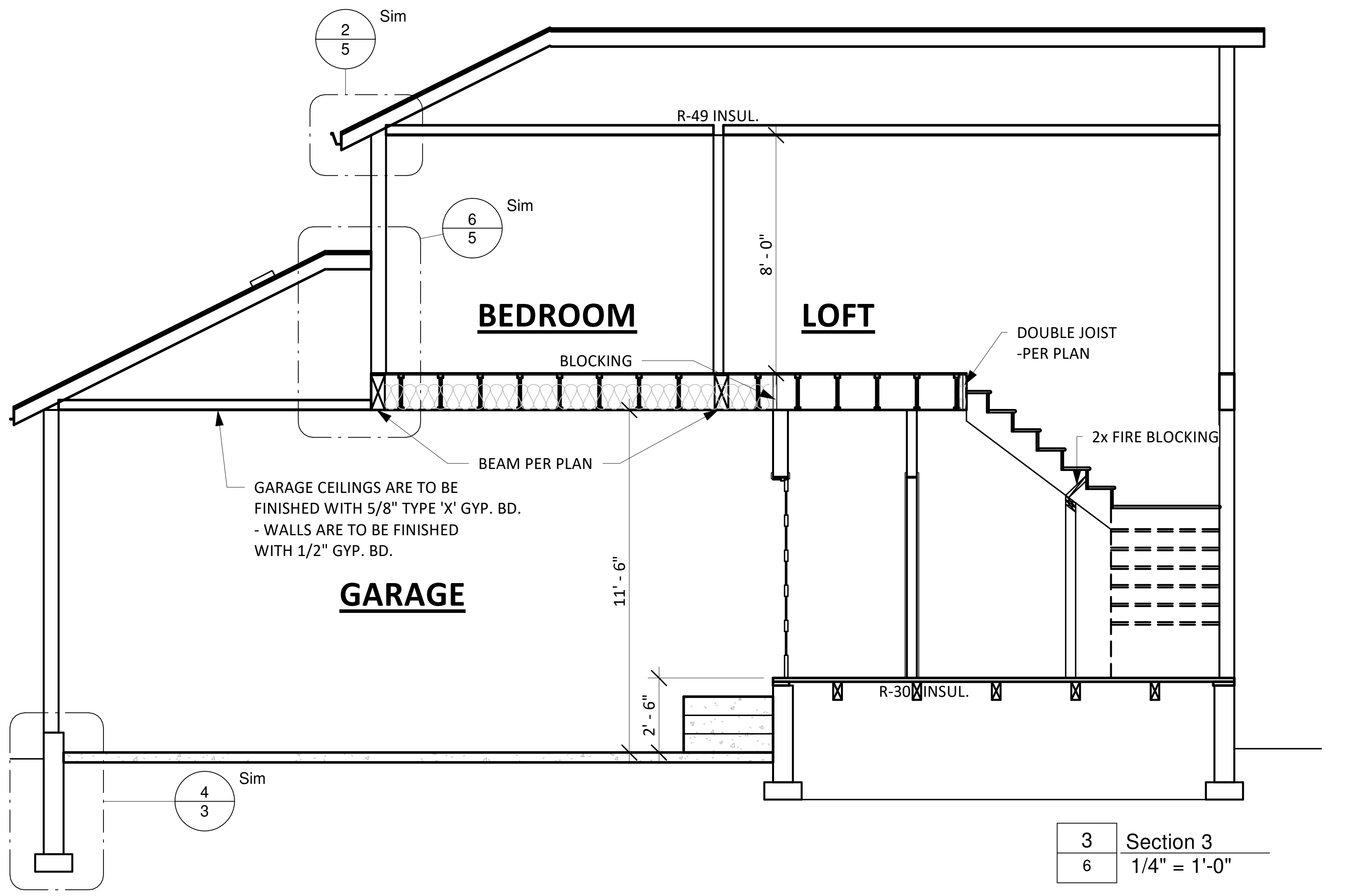
2
5
Sim
R-49 INSUL.
6
5
Sim
8' - 0"
BEDROOM
LOFT
BLOCKING
DOUBLE JOIST
-PER PLAN
BEAM PER PLAN
2x FIRE BLOCKING
GARAGE CEILINGS ARE TO BE
FINISHED WITH 5/8" TYPE 'X' GYP. BD.
- WALLS ARE TO BE FINISHED
WITH 1/2" GYP. BD.
GARAGE
11' - 6"
2' - 6"
R-30 INSUL.
4
3
Sim

3 Section 3
6 1/4" = 1'-0"

BUILDERS
DESIGN INC
COMMERCIAL · RESIDENTIAL · REMODELING
11125 NE WEIDLER ST. · PORTLAND, OR 97220
PHONE: (503) 252-3453 · FAX: (503) 252-3454
EMAIL: BUILDERSDESIGN@GMAIL.COM

All ideas, arrangements, drawings and plans set forth on this sheet are the original work product of, owned by and are the property of Builders Design Inc., an Oregon corporation, and use of this said work product is limited to a specified project for the persons named hereon, and for the construction of one building. Any use, reuse or disclosure of said plans, reproductions or project, ideas, designs and / or arrangements, other than by Builders Design Inc., is strictly prohibited without the written permission of Builders Design Inc. Written dimensions on these drawings shall have precedence over scaled dimensions; contractors shall verify, and be responsible for all dimensions and conditions on the job and this office must be notified of any variations from the dimensions and conditions shown by these drawings. Shop details must be submitted to this office for approval before proceeding with fabrication. Supervision is not included unless specified in work contract.

SENTAUR CONSTRUCTION
3316 SE Evergreen St, Milwaukie, OR 97222

SECTIONS & DETAILS

No.	Date	Issued by

Project number:	13844
Date:	2/2/2026 4:57:54 PM
Drawn by:	CHT
Area:	2,311 ft²
Scale	As indicated

Garage or underfloor with an insulated enclosure

In this scenario, the building thermal envelope is extended into the garage or crawlspace. When using garage or underfloor spaces for locating ductwork, air handling equipment and appliances, there are a few options to prescriptively meet the requirements.

Up to 10 feet of the ductwork is permitted outside of the thermal envelope, provided that all exposed ductwork is insulated to a minimum of R-8.

Ventilation exhaust and intake ductwork is not required to be deeply buried or located inside the building thermal envelope. See Figure 10 for the requirements related to ducts buried deeply in the crawlspace insulation.

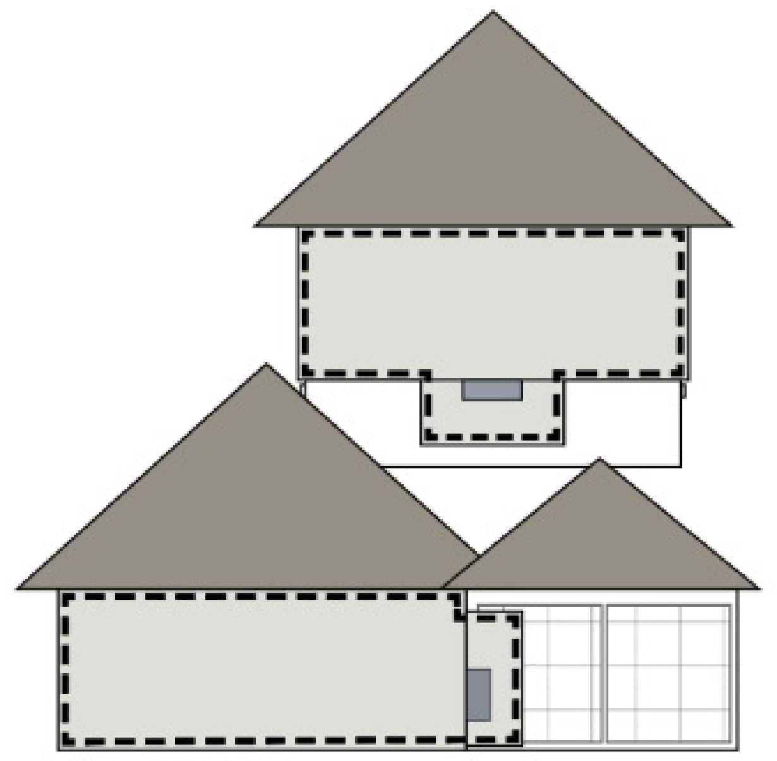
INSULATION AND AIR BARRIER

Figure 3: Small insulated room or enclosure in garage or crawlspace

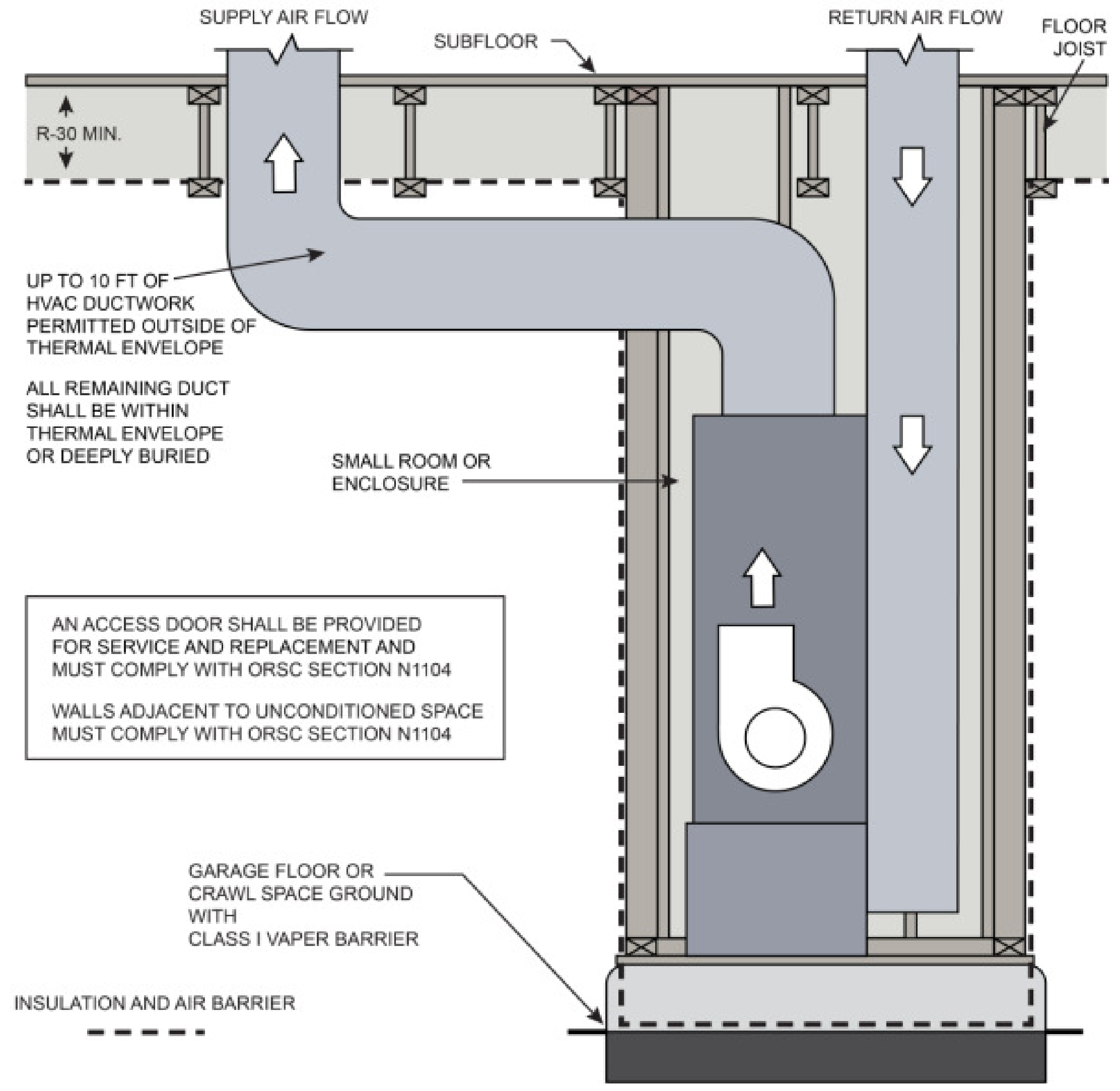
SUPPLY AIR FLOW
SUBFLOOR
RETURN AIR FLOW
FLOOR JOIST
R-30 MIN.
UP TO 10 FT OF HVAC DUCTWORK PERMITTED OUTSIDE OF THERMAL ENVELOPE
ALL REMAINING DUCT SHALL BE WITHIN THERMAL ENVELOPE OR DEEPLY BURIED
SMALL ROOM OR ENCLOSURE
AN ACCESS DOOR SHALL BE PROVIDED FOR SERVICE AND REPLACEMENT AND MUST COMPLY WITH ORSC SECTION N1104
WALLS ADJACENT TO UNCONDITIONED SPACE MUST COMPLY WITH ORSC SECTION N1104
GARAGE FLOOR OR CRAWL SPACE GROUND WITH CLASS I VAPER BARRIER
INSULATION AND AIR BARRIER

Common approaches for installation of ducts inside

The following are common approaches to installing ducts inside the building thermal envelope and the exceptions for deeply buried ducts in vented attics or vented crawlspaces.

▬ ▬ ▬ INSULATION AND AIR BARRIER

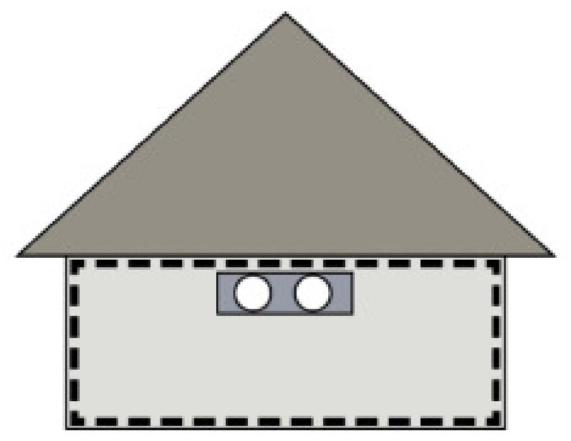

Figure 4: Ducts in a dropped ceiling

Application: This approach is appropriate for single-story homes with 9- or 10-foot plate heights. It is also useful in two-story designs and for branch ducts in a house that may use a different approach.

Description: The key element is to run ductwork in soffits or bulkheads built within the building thermal envelope. These building cavities, and the ducts, are now surrounded by the building air barrier and full insulation. One good location for a dropped ceiling is a central hall adjacent to several bedrooms. The space above the ceiling allows easy access to each of the bedrooms.

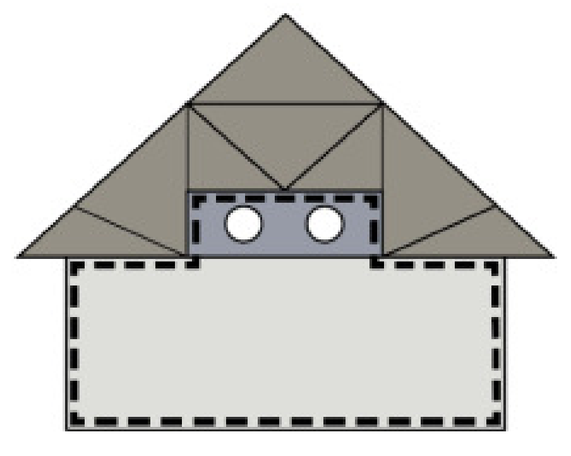

Figure 5: Ducts in an inverted soffit or modified truss

Application: This approach is appropriate for single-story homes with plate heights as low as $7^1/_2$ feet. It is also useful for branch ducts in a house.

Description: Duct chases are created by extending the building thermal envelope into the attic. These extensions are surrounded by the building air barrier and insulation. An inverted soffit would typically be located near the center line of the long axis of the floor plan because it would serve as the main supply trunk. An inverted soffit is invisible from the living space and adequate design flexibility, especially when parallel to the trusses.

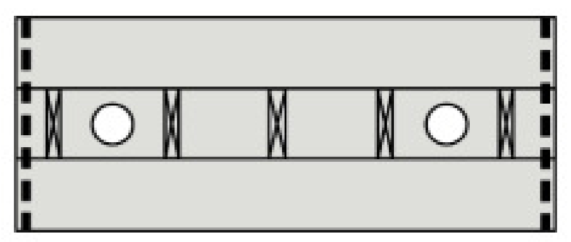

Figure 6: Ducts between floors

Application: This approach works only with two-story homes.

Description: To some extent the space between floors may already be used to run ducts, pipes, and wires. While ducts easily run between floor joists, it can be very difficult to run ducts across joists. Use of open web floor trusses can allow unrestricted access to rooms on the upper and lower floors.

Attic with an insulated enclosure

In this scenario, the thermal boundary is extended into the attic by creating a small room or enclosure with a complete and continuous thermal barrier. This space can be used to house the HVAC system and all (or most) of the ducts. The space can also be large enough to locate the furnace and other equipment. The required access for service and replacement shall be provided in accordance with the ORSC.

Up to 10 feet of the ductwork is permitted outside of the building thermal envelope, provided that the exposed ductwork is insulated to a minimum of R-8.

See Figures 7 through 9 for the requirements related to ducts buried deeply in the attic insulation.

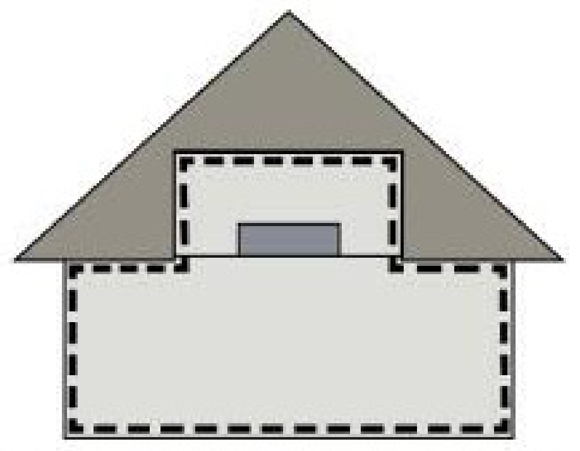
INSULATION AND AIR BARRIER

Figure 1: Small insulated room or enclosure in attic space

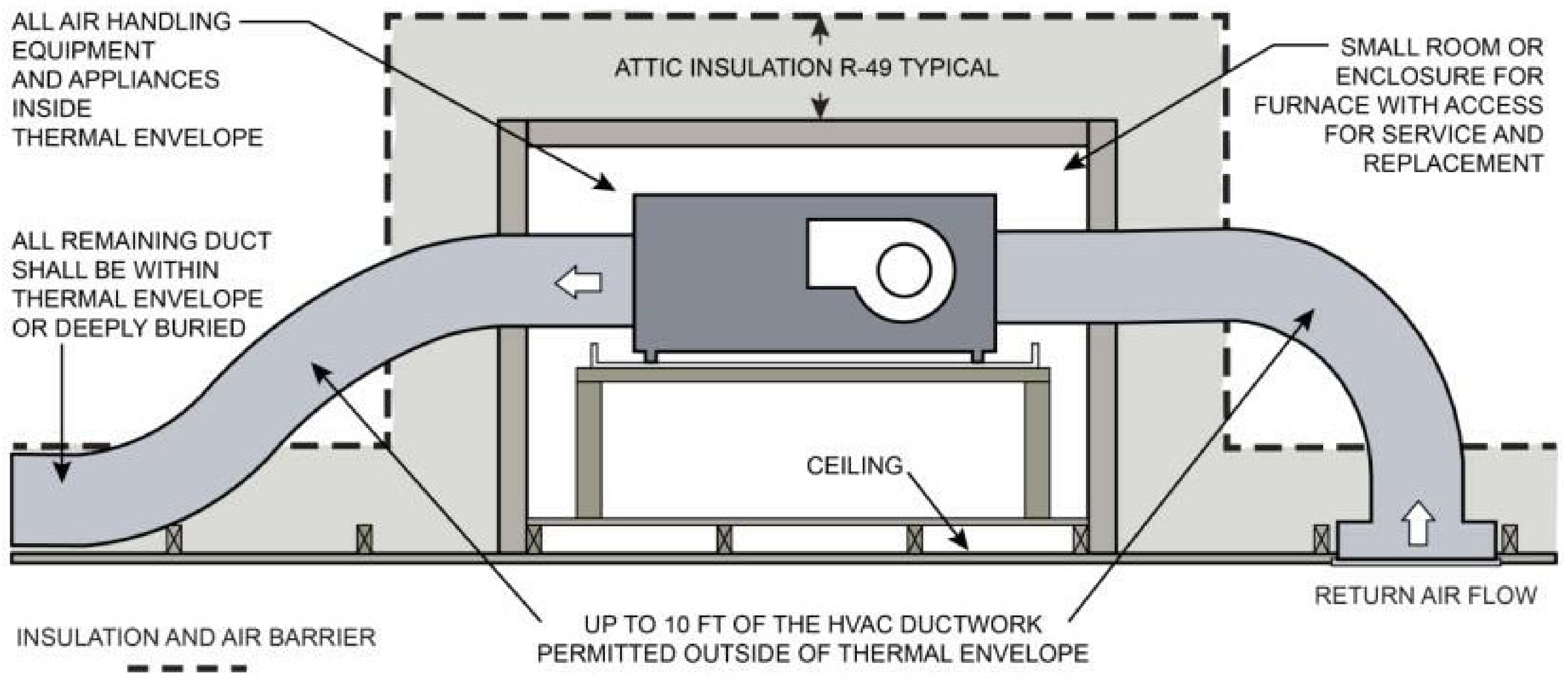
ALL AIR HANDLING EQUIPMENT AND APPLIANCES INSIDE THERMAL ENVELOPE
ATTIC INSULATION R-49 TYPICAL
SMALL ROOM OR ENCLOSURE FOR FURNACE WITH ACCESS FOR SERVICE AND REPLACEMENT
ALL REMAINING DUCT SHALL BE WITHIN THERMAL ENVELOPE OR DEEPLY BURIED
CEILING
RETURN AIR FLOW
INSULATION AND AIR BARRIER
UP TO 10 FT OF THE HVAC DUCTWORK PERMITTED OUTSIDE OF THERMAL ENVELOPE

Ducts deeply buried in crawlspace insulation

In accordance with ORSC Sections N1105.3, HVAC supply and return ductwork is permitted to be deeply buried in the crawlspace insulation where specific requirements listed in ORSC Section N1105.3.3 are met **and two measures** are selected for compliance in ORSC Table N1101.1(2).

> **N1105.3.3 Deeply buried duct in vented crawlspace.** Ducts deeply buried in crawlspace insulation shall be in accordance all of the following when using Section N1105.3, Exception 3:
>
> 1. Insulation shall be installed to fill gaps and voids between the duct and the floor above, and a minimum of R-19 insulation shall be installed below the duct and between the duct and unconditioned crawlspace.
> 2. All ductwork in the crawl space shall be insulated to R-8.
> 3. The floor between the crawlspace and the dwelling shall be insulated with minimum R-30.
>
> **Exception:** HVAC ductwork shall be permitted to be located outside of the building thermal envelope where the duct is insulated to a minimum of R-27 with a Class II or III vapor retarder.

In a vented underfloor space, batt insulation may be used to achieve the R-19 insulation level around the entire surface area of the duct not in contact with the required R-30 floor insulation. Floor insulation shall be installed to fill any gaps and voids between the duct and the floor.

Depth marker flags are not required as long as the additional batt insulation is clearly marked as R-19 and there is minimal compression of the batt by support straps or other material.

Figure 10: Buried duct in underfloor space

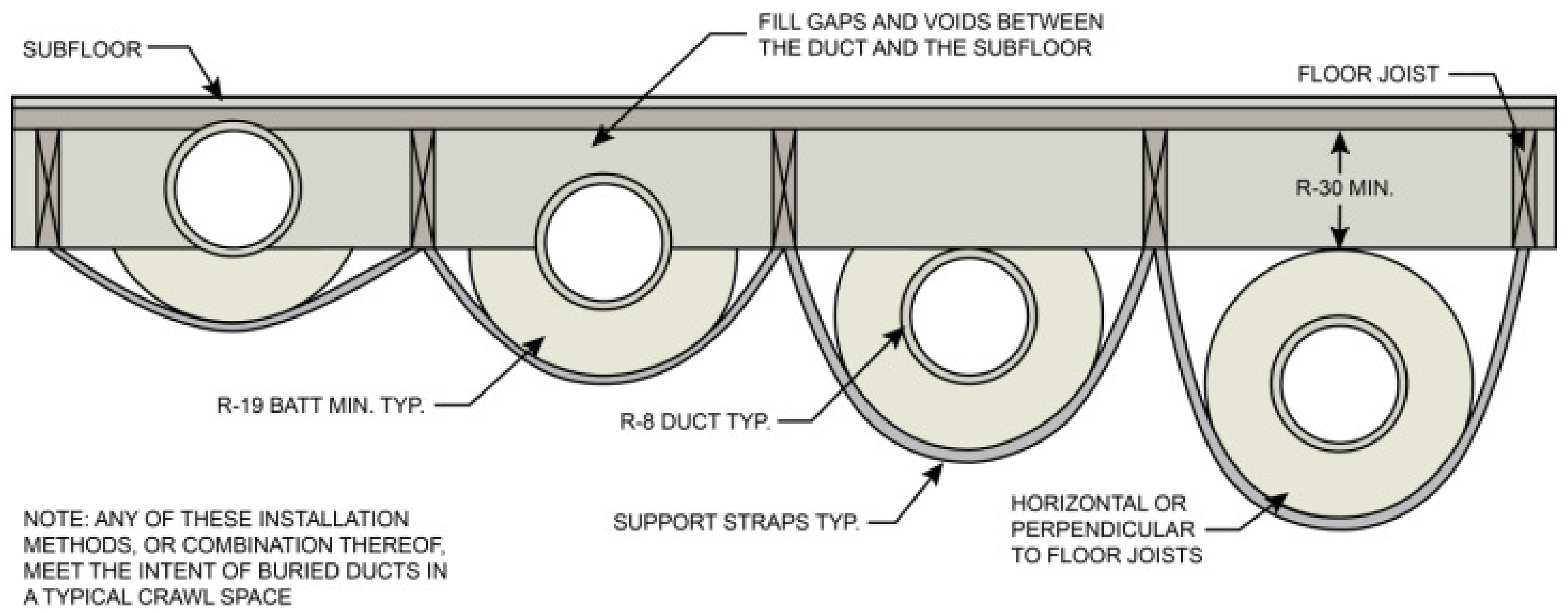
SUBFLOOR
FILL GAPS AND VOIDS BETWEEN THE DUCT AND THE SUBFLOOR
FLOOR JOIST
R-30 MIN.
R-19 BATT MIN. TYP.
R-8 DUCT TYP.
SUPPORT STRAPS TYP.
HORIZONTAL OR PERPENDICULAR TO FLOOR JOISTS
NOTE: ANY OF THESE INSTALLATION METHODS, OR COMBINATION THEREOF, MEET THE INTENT OF BURIED DUCTS IN A TYPICAL CRAWL SPACE

Ducts deeply buried in attic insulation

In accordance with ORSC Sections N1105.3, HVAC supply and return ductwork is permitted to be deeply buried in the attic insulation where specific requirements listed in ORSC Section N1105.3.1 are met **and two measures** are selected for compliance in ORSC Table N1101.1(2).

> **N1105.3.1 Deeply buried duct in attic.** Ducts deeply buried in *attic* insulation shall be in accordance with all of the following when using Section N1105.3, Exception 3:
>
> 1. Insulation shall be installed to fill gaps and voids between the duct and the ceiling, and a minimum of R-19 insulation shall be installed above the duct between the duct and unconditioned *attic*.
> 2. All ductwork in the attic shall be insulated to R-8.
> 3. Insulation depth marker flags shall be installed on the ducts every 10 feet (3048 mm) or as approved by the *building official*.
>
> **Exception:** HVAC ductwork shall be permitted to be located outside of the building thermal envelope where the duct is insulated to a minimum of R-27 with a Class II or III vapor retarder.

The following are examples of compliance with ORSC Section N1105.3.1.

Figure 7

Install insulation to fill gaps and voids between the duct and the ceiling.

Install a minimum of R-19 insulation above the R-8 duct adding additional separation between the ductwork and the unconditioned attic.

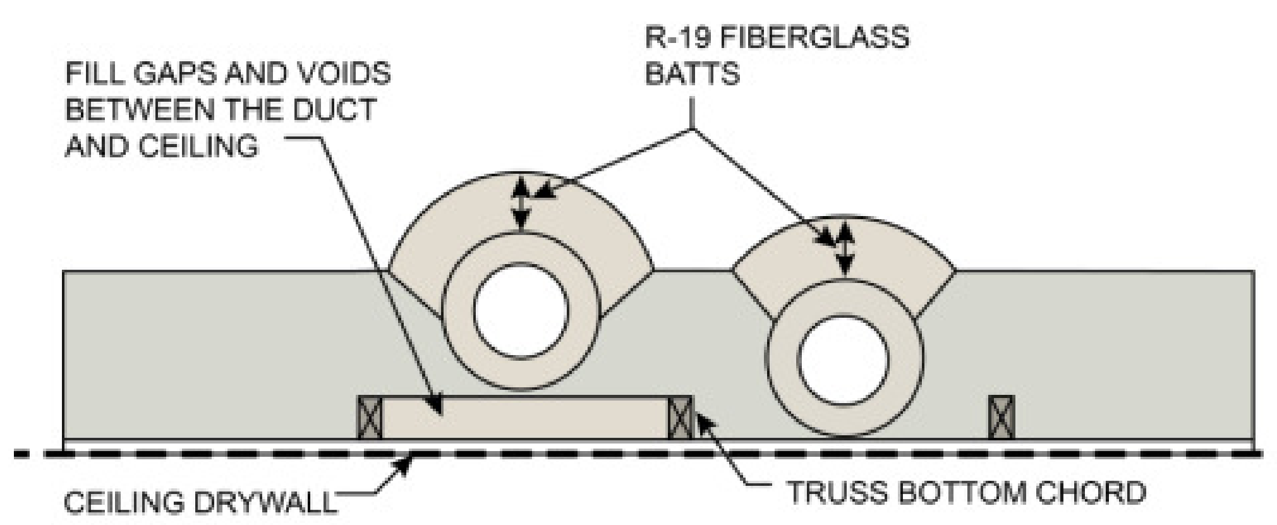
FILL GAPS AND VOIDS BETWEEN THE DUCT AND CEILING
R-19 FIBERGLASS BATTS
CEILING DRYWALL
TRUSS BOTTOM CHORD

Figure 8

Fiberglass batt material may be used to achieve the R-19 insulation level above the duct.

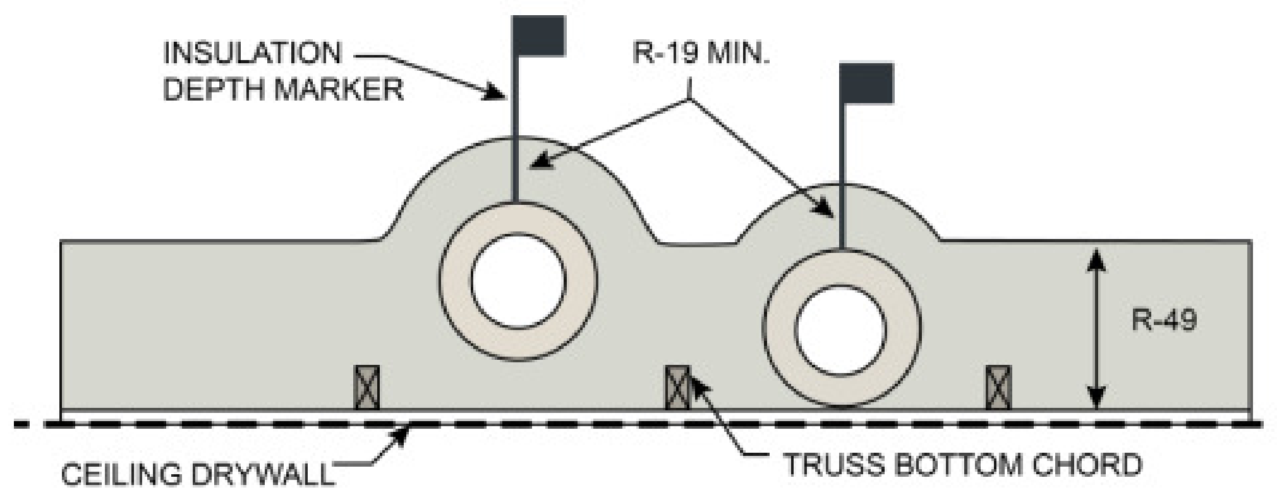
INSULATION DEPTH MARKER
R-19 MIN.
R-49
CEILING DRYWALL
TRUSS BOTTOM CHORD

Figure 9

Install insulation depth marker flags on the ducts every 10 feet or as approved by the building official.

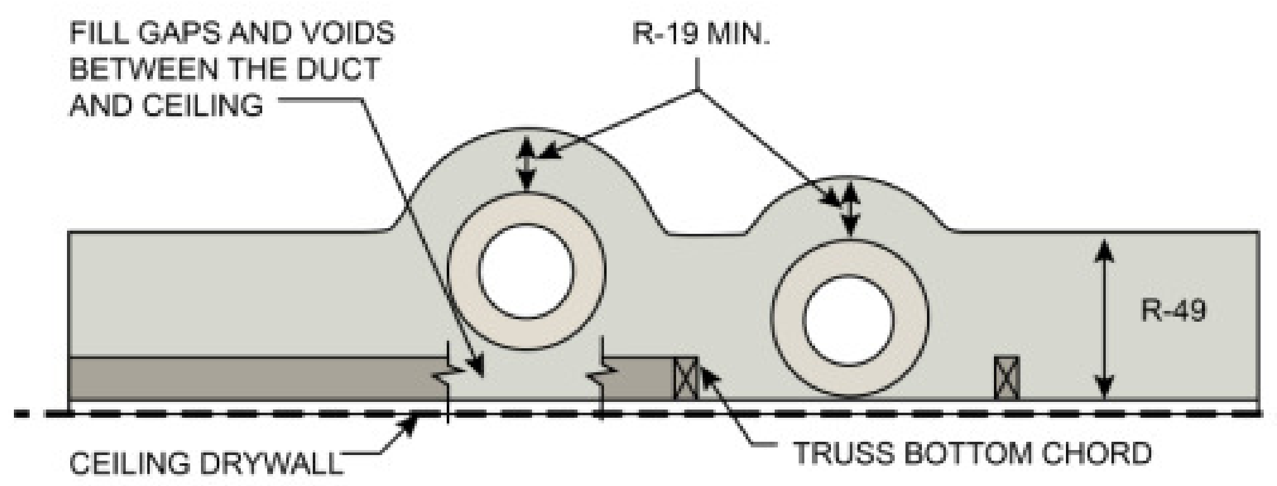
FILL GAPS AND VOIDS BETWEEN THE DUCT AND CEILING
R-19 MIN.
R-49
CEILING DRYWALL
TRUSS BOTTOM CHORD

Unvented attic

In an unvented attic the thermal boundary is at the roof plane instead of the ceiling because the insulation, air barrier and vapor retarder are all attached to roof framing.

One way to create a conditioned attic is with spray foam applied to the underside of the roof sheathing. It's possible to accomplish the same thing with blown-in insulation although additional framing would be required to hold full insulation depth.

An unvented and insulated attic can be used to house the HVAC system and all (or most) of the ducts. Ducts located within an unvented attic are not required to be insulated or deeply buried.

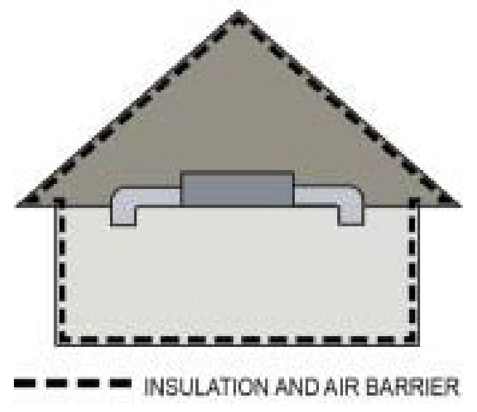
INSULATION AND AIR BARRIER

1 DUCTING REQUIREMENTS
7 12" = 1'-0"

BUILDERS DESIGN INC
COMMERCIAL · RESIDENTIAL · REMODELING
11125 NE WEIDLER ST. · PORTLAND, OR 97220
PHONE: (503) 252-3453 · FAX: (503) 252-3454
EMAIL: BUILDERSDESIGN@GMAIL.COM

All ideas, arrangements, drawings and plans set forth on this sheet are the original work product of, owned by and are the property of Builders Design Inc., an Oregon corporation, and use of this said work product is limited to a specified project for the persons named hereon, and for the construction of one building. Any use, reuse or disclosure of said plans, reproductions or project, ideas, designs and / or arrangements, other than by Builders Design Inc., is strictly prohibited without the written permission of Builders Design Inc. Written dimensions on these drawings shall have precedence over scaled dimensions; contractors shall verify, and be responsible for all dimensions and conditions on the job and this office must be notified of any variations from the dimensions and conditions shown by these drawings. Shop details must be submitted to this office for approval before proceeding with fabrication. Supervision is not included unless specified in work contract.

SENTAUR CONSTRUCTION
3316 SE Evergreen St, Milwaukie, OR 97222

DUCTING REQUIREMENTS

No.	Date	Issued by

Project number:	13844
Date:	2/2/2026 4:57:54 PM
Drawn by:	CHT
Area:	2,311 ft²
Scale	12" = 1'-0"

PERMIT REQUIRED PRIOR TO START OF CONSTRUCTION

R105.1 REQUIRED. ANY OWNER OR OWNER'S AUTHORIZED AGENT WHO INTENDS TO CONSTRUCT, ENLARGE, ALTER, REPAIR, MOVE OR CHANGE THE OCCUPANCY OF A BUILDING OR STRUCTURE, OR TO ERECT, INSTALL, ENLARGE, ALTER, REPAIR, REMOVE, CONVERT OR REPLACE ANY GAS OR MECHANICAL SYSTEM, THE INSTALLATION OF WHICH IS REGULATED BY THIS CODE, OR TO CAUSE ANY SUCH WORK TO BE PERFORMED, SHALL FIRST MAKE APPLICATION TO THE BUILDING OFFICIAL AND OBTAIN THE REQUIRED PERMIT

CODE SUMMARY:

· BUILDING CODE - 2023 ORSC -- MECHANICAL SPECIALTY CODE - 2022 OMSC -- ELECTRICAL CODE - 2023 OESC
· PLUMBING CODE - 2023 OPSC -- FIRE CODE - 2022 OFC -- 2022 EDITION OF ASHRAE 90.1

1. CODE COMPLIANCE INTENT

ALL WORK SHOWN IN THE PLANS IS INTENDED TO CONFORM TO THE LATEST OREGON RESIDENTIAL SPECIALTY CODE AT THE TIME OF DRAFTING. BUILDERS DESIGN, INC. DOES NOT GUARANTEE FINAL COMPLIANCE WITH THIS OR ANY OTHER APPLICABLE CODES.

2. PRE-CONSTRUCTION REVIEW

THE CONTRACTOR AND BUILDING OWNER MUST REVIEW THE PLANS AND SITE CONDITIONS THOROUGHLY BEFORE CONSTRUCTION BEGINS. ANY ERRORS OR OMISSIONS MUST BE REPORTED TO BUILDERS DESIGN, INC., IN WRITING, PRIOR TO STARTING WORK. BUILDERS DESIGN, INC. IS NOT LIABLE FOR ISSUES IDENTIFIED AFTER CONSTRUCTION COMMENCES.

3. DIMENSIONS

WRITTEN DIMENSIONS ON THE PLANS OVERRIDE SCALED DIMENSIONS. THE CONTRACTOR MUST VERIFY ALL DIMENSIONS ON-SITE AND NOTIFY BUILDERS DESIGN, INC. IN WRITING IF ADDITIONAL DIMENSIONS ARE REQUIRED. BUILDERS DESIGN, INC. IS NOT RESPONSIBLE FOR DIMENSION ERRORS UNREPORTED BEFORE CONSTRUCTION.

4. GRADING

GRADING INDICATED ON THE PLANS IS APPROXIMATE. THE CONTRACTOR IS SOLELY RESPONSIBLE FOR FINAL GRADING DETERMINATIONS AND MUST INFORM BUILDERS DESIGN, INC. IN WRITING OF ANY NECESSARY PLAN CHANGES. BUILDERS DESIGN, INC. IS NOT LIABLE FOR GRADING INACCURACIES OR RELATED COSTS.

5. CODE VERIFICATION

THE CONTRACTOR MUST INDEPENDENTLY CONFIRM THAT THE PLANS MEET ALL STATE AND LOCAL BUILDING CODES BEYOND WHAT IS DEPICTED. BUILDERS DESIGN, INC.'S LIABILITY FOR DAMAGES DUE TO PLAN INACCURACIES, ERRORS, OMISSIONS, OR NON-COMPLIANCE IS LIMITED TO THE FEE PAID TO BUILDERS DESIGN, INC. UNDER THIS AGREEMENT.

6. INSTALLATION RESPONSIBILITY

THE CONTRACTOR IS FULLY RESPONSIBLE FOR THE SELECTION, INSTALLATION, AND PERFORMANCE OF ALL MATERIALS AND ASSEMBLIES (E.G., INSULATION, FLASHING, ROOFING, VENTILATION). BUILDERS DESIGN, INC. RECOMMENDS CONSULTING LICENSED PROFESSIONALS FOR INSTALLATION AND IS NOT LIABLE FOR INSTALLATION FAILURES OR CODE VIOLATIONS DUE TO CONTRACTOR ACTIONS OR SITE CONDITIONS.

7. ZONING AND CODE LIABILITY

PLANS RELY ON CLIENT AND/OR CONTRACTOR PROVIDED INFORMATION. THE PROPERTY OWNER AND CONTRACTOR ARE SOLELY RESPONSIBLE FOR ENSURING COMPLIANCE WITH ALL LOCAL, STATE, AND FEDERAL ZONING AND BUILDING CODES BEFORE CONSTRUCTION. BUILDERS DESIGN, INC. DOES NOT GUARANTEE CODE COMPLIANCE, AS CODES MAY CHANGE, AND INITIAL RESEARCH DOES NOT IMPLY ONGOING CONFORMITY. THE CLIENT MUST VERIFY COMPLIANCE WITH THE GOVERNING JURISDICTION. REVISIONS DUE TO JURISDICTIONAL FEEDBACK (E.G., CHECK SHEETS) WILL BE BILLED AT AN AGREED UPON RATE. BUILDERS DESIGN, INC. IS NOT LIABLE FOR ERRORS, OMISSIONS, NON-COMPLIANCE, OR ANY RESULTING COSTS, DELAYS, OR DAMAGES. THE CLIENT SHALL FULLY INDEMNIFY, DEFEND, AND HOLD HARMLESS BUILDERS DESIGN, INC., ITS OFFICERS, EMPLOYEES, AND CONSULTANTS FROM ALL FIRST-PARTY OR THIRD-PARTY CLAIMS, DEMANDS, LOSSES, LIABILITIES, OR LEGAL ACTIONS (INCLUDING ATTORNEY FEES) ARISING FROM NON-COMPLIANCE WITH ZONING OR BUILDING CODES OR THE CLIENT'S USE OF THE PLANS.

8. JOBSITE SAFETY

BUILDERS DESIGN, INC. HAS NO CONTROL OVER THE MEANS, METHODS, OR EXECUTION OF CONSTRUCTION AND BEARS NO RESPONSIBILITY FOR JOBSITE SAFETY. BUILDERS DESIGN, INC. IS NOT LIABLE FOR INJURIES, DAMAGES, OR LOSSES INVOLVING CONTRACTORS, SUBCONTRACTORS, WORKERS, OR ANY INDIVIDUALS ON OR NEAR THE JOBSITE.

9. ACCEPTANCE OF CONDITIONS

USE OF THESE PLANS CONSTITUTES ACCEPTANCE OF ALL CONDITIONS OUTLINED HEREIN.

SITE WORK

1. REMOVE TOP SOIL AND ORGANIC MATERIAL FROM THE BUILDING SITE, STOCKPILING ON SITE FOR FINAL GRADING IF POSSIBLE.
2. FOOTINGS ARE TO BEAR ON UNDISTURBED LEVEL SOIL, STEPPED AS REQUIRED TO MAINTAIN THE REQUIRED DEPTH BELOW FINISH GRADE.
3. ANY FILL UNDER GRADE SUPPORTED CONCRETE SLABS TO BE 4" THICK (MIN.) 3/4 MINUS ROCK COMPACTED TO 95%.
4. CONCRETE SLABS TO BE 4" THICK, 3000 PSI AT 28 DAYS WITH CONTROL JOINTS AT 25' O/C (MAX.) EACH WAY
5. FINISH GRADES ARE TO REMAIN AT LEAST 6" BELOW FINISH SIDING.
6. CONTRACTOR TO SLOPE GRADE MINIMUM 6" IN 10 FEET AWAY FROM BUILDING, OR CONTRACTOR SHALL PROVIDE PROPER FOOTING DRAINAGE AND FOUNDATION WALL WATER PROOFING AS DETERMINED ON SITE. PROVIDE LOW POINT DRAIN IN CRAWL SPACE

FOUNDATIONS

1. CONCRETE - MIX AND 28 DAY STRENGTH OF CONCRETE

BASEMENT WALLS, FOUNDATIONS AND OTHER CONCRETE NOT EXPOSED TO THE WEATHER	2,500 PSI
BASEMENT SLABS AND INTERIOR SLABS ON GRADE, EXCEPT GARAGE FLOOR SLABS	2,500 PSI
BASEMENT WALLS, FOUNDATION WALLS, EXTERIOR WALLS AND OTHER VERTICAL CONCRETE WORK EXPOSED TO THE WEATHER	3,000 PSI
PORCHES, CARPORT SLABS AND STEPS EXPOSED TO THE WEATHER, AND GARAGE FLOOR SLABS	3,000 PSI

f2. ALL REINFORCING STEEL TO BE A-615 GRADE 60. WELDED WIRE MESH TO BE A-185.
3. LAP ALL CONTINUOUS BARS 30 x DIA. (MIN.) PLACE ALL REINFORCING AS PER ACI CODES & STANDARDS.
4. PROVIDE A MINIMUM CLEARANCE OF 18" UNDER GIRDERS, BEAMS, OR JOISTS, IN CRAWL SPACES.
5. COVER ENTIRE CRAWL SPACE WITH 6 MIL. BLACK "VISQUEEN" AND EXTEND UP FOUNDATION WALLS AND FASTEN TO MUD SILL
6. PROVIDE A MINIMUM OF 1 S.F. OF NET VENTILATION AREA FOR EACH 150 S.F. OF CRAWL SPACE AREA. VENTS ARE TO BE CLOSABLE AND HAVE 1/4" OPENINGS IN CORROSIVE RESISTANT SCREEN. POST NOTICE ABOUT OPENING VENTS NEAR ELECTRICAL PANEL.
7. ALL WOOD IN CONTACT WITH CONCRETE OR GROUND IS TO BE PRESSURE TREATED.
8. BEAM POCKETS IN CONCRETE WALLS TO HAVE 1/2" AIR SPACE AT SIDES AND ENDS AND 3" OF BEARING (MIN.)
9. MUD SILLS TO BE 2x6 PRESSURE TREATED WOOD WITH 1/2" DIA. x 10" ANCHOR BOLTS SPACED 6'-0" O/C, OR PER SHEAR WALL SCHEDULE AND WITHIN 12" OF CORNERS. LAYOUT FOR 14' LONG 2x6 P.T. SILL PLATE, PROVIDE AB. EACH SIDE OF SILL SPLICES.
10. ALL EXTERIOR WALL SILL PLATES AND SILL PLATES BETWEEN CONDITIONED AND UNCONDITIONED SPACE. MATERIAL MAY BE OF SEALANT, ACOUSTICAL TAPE, SILL SEALER OR OTHER PRODUCT DESIGNED TO LIMIT MOISTURE, THERMAL AND ACOUSTIC TRANSMISSION, AS WELL AS AIR INFILTRATION AND EXFILTRATION. SEE ORSC SECTION N1104.8.2.

TABLE R602.3(1) - FASTENING SCHEDULE

ITEM	DESCRIPTION OF BUILDING ELEMENTS	NUMBER & TYPE OF FASTENER[A,B,C]	SPACING AND LOCATION
	ROOF		
1	BLOCKING BETWEEN CEILING JOISTS, RAFTERS OR TRUSSES TO TOP PLATE OR OTHER FRAMING BELOW	4-8d box (2-1/2" × 0.113")	TOE NAIL
	BLOCKING BETWEEN RAFTERS OR TRUSSES NOT AT THE WALL TOP PLATES, TO RAFTER OR TRUSS	2-8d common (2-1/2" × 0.131")	EACH END TOE NAIL
		2-16d common (3-1/2" × 0.162")	END NAIL
	FLAT BLOCKING TO TRUSS AND WEB FILLER	16d common (3-1/2" × 0.162")	6" O.C. FACE NAIL
2	CEILING JOISTS TO TOP PLATE	4-8d box (2-1/2" × 0.113")	PER JOIST,TOE NAIL
3	CEILING JOIST NOT ATTACHED TO PARALLEL RAFTER, LAPS OVER PARTITIONS [SEE SECTION R802.5.2 AND TABLE R802.5.2(1)]	4-10d box (3" × 0.128")	FACE NAIL
4	CEILING JOIST ATTACHED TO PARALLEL RAFTER (HEEL JOINT) [SEE SECTION R802.5.2 AND TABLE R802.5.2(1)]	Table R802.5.2(1)	FACE NAIL
5	COLLAR TIE TO RAFTER, FACE NAIL	4-10d box (3" × 0.128")	FACE NAIL EACH RAFTER
6	RAFTER OR ROOF TRUSS TO PLATE	3-16d box nails (3-1/2" × 0.135")	**2 TOE NAILS ON ONE SIDE AND 1 TOE NAIL ON OPPOSITE SIDE OF EACH RAFTER OR TRUSS**
7	ROOF RAFTERS TO RIDGE, VALLEY OR HIP RAFTERS OR ROOF RAFTER TO MINIMUM 2" RIDGE BEAM	4-16d (3-1/2" × 0.135")	TOE NAIL
		3-16d box (3-1/2" × 0.135")	END NAIL
	WALL		
8	STUD TO STUD (NOT AT BRACED WALL PANELS)	16d common (3-1/2" × 0.162")	24" O.C. FACE NAIL
9	STUD TO STUD AND ABUTTING STUDS AT INTERSECTING WALL CORNERS (AT BRACED WALL PANELS)	16d common (3-1/2" × 0.162")	16" O.C. FACE NAIL
10	BUILT-UP HEADER (2" TO 2" HEADER WITH 1/2" SPACER)	16d common (3-1/2" × 0.162")	16" O.C. EACH EDGE FACE NAIL
11	CONTINUOUS HEADER TO STUD	5-8d box (2-1/2" × 0.113")	TOE NAIL
12	ADJACENT FULL-HEIGHT STUD TO END OF HEADER	4-16d box (3-1/2" × 0.135")	END NAIL
13	TOP PLATE TO TOP PLATE	16d common (3-1/2" × 0.162")	16" O.C. FACE NAIL
14	DOUBLE TOP PLATE SPLICE	8-16d common (3-1/2" × 0.162")	FACE NAIL ON EACH SIDE OF END JOINT (MINIMUM 24" LAP SPLICE LENGTH EACH SIDE OF END JOINT)
15	BOTTOM PLATE TO JOIST, RIM JOIST, BAND JOIST OR BLOCKING (NOT AT BRACED WALL PANELS)	2-16d common (3-1/2" × 0.162")	16" O.C. EACH FACE NAIL
16	BOTTOM PLATE TO JOIST, RIM JOIST, BAND JOIST OR BLOCKING (AT BRACED WALL PANEL)	3-16d box (3-1/2" × 0.135")	16" O.C. FACE NAIL
17	TOP OR BOTTOM PLATE TO STUD	4-8d box (2-1/2" × 0.113")	TOE NAIL
		3-16d box (3-1/2" × 0.135")	END NAIL
18	TOP PLATES, LAPS AT CORNERS AND INTERSECTIONS	3-10d box (3" × 0.128")	FACE NAIL
19	1" BRACE TO EACH STUD AND PLATE	3-8d box (2-1/2" × 0.113")	FACE NAIL
20	1" × 6" SHEATHING TO EACH BEARING	3-8d box (2-1/2" × 0.113")	FACE NAIL
21	1" × 8" AND WIDER SHEATHING TO EACH BEARING	3-8d box (2-1/2" × 0.113")	FACE NAIL

NOTE: SEE TABLE R602.3(1) FOR ADDITIONAL FASTENER DETAILS

FLASHING & MOISTURE PROTECTION

1. CONTRACTOR TO PROVIDE A "WATER TIGHT ENCLOSURE" FOR THE VALLEY ENVIRONMENT, EMPLOYING THE HIGHEST QUALITY MATERIALS, CRAFTSMAN AND CONSTRUCTION METHODOLOGY, BOTH GENERAL AND SPECIFIC TO THE VALLEY
2. ALL EXTERIOR FLASHING ARE TO BE CONSTRUCTED WITH MIN. GAGE 28 EXPOSED & 30 GAGE CONCEALED, BAKED ENAMEL
3. FLASHING SHALL BE INSTALLED AT JUNCTIONS OF CHIMNEYS AND ROOFS,IN ROOF VALLEYS AND AROUND ALL ROOF OPENINGS, INCLUDING SKYLIGHTS, ROOF VENTS, ROOF EDGES BOTH RAKE AND EAVE.
4. FLASHING SHALL BE INSTALLED AROUND ALL EXTERIOR DOORS AND WINDOWS, TRANSITIONS BETWEEN SIDING AND ROOF.
5. ALL FLASHING TO BE INSTALLED PER "SMACNA" LATEST EDITION OF THE "ARCHITECTURAL SHEET METAL MANUAL".
6. BUILDING WRAP OF "TYVEK" OR SAME TO BE INSTALLED PER MANUFACTURERS INSTRUCTIONS, INCLUDING WRAPPING WINDOW AND DOOR OPENINGS AND TAPING JOINTS.
7. FLASHING FOR WINDOWS: INSTALL ADHESIVE FLASHING THE WIDTH OF SILL AND UP 12" EACH JAMB, AND LAP ENTIRE LENGTH OF JAMB, AND LAP ADHESIVE FLASHING THE WIDTH OF HEAD AND LAP 12" DOWN EACH JAMB. (DETAIL)
8. ALL PRODUCTS SHALL BE INSTALLED PER MANUFACTURER'S SPECIFICATIONS. DESIGNER TAKES NO RESPONSIBILITY FOR INSTALLATION.
9. AT VERTICAL SIDING TRANSITIONS, BACK JOINTS WITH SELF-ADHERED FLASHING, A BACKER ROD AND CONTINUOUS BEAD OF SEALANT. AT HORIZONTAL TRANSITIONS, PROVIDE FLASHING PER ORSC R703.4. *THE FLASHING SHALL EXTEND TO THE SURFACE OF THE EXTERIOR WALL FINISH.*
10. COVER SEISMIC/SHEAR STRAPS AND OTHER STRUCTURAL HARDWARE WITH SELF-ADHERED FLASHING (SAF) PRIOR TO THE APPLICATION OF WATER-RESISTIVE BARRIER (WRB). WRB MAY BE PUNCTURED DURING INSTALLATION ON SHARP EDGES OF HARDWARE, PRODUCING A GATEWAY FOR AIR AND WATER INTRUSION.
11. FASTENERS PENETRATING THE EXTERIOR ENVELOPE SHOULD BE PREDRILLED AND HOLES FILLED WITH SEALANT PRIOR TO DRIVING FASTENERS.
12. EXTERIOR WALL PENETRATIONS TO BE PROVIDED WITH *QUICKFLASH* PANELS OR SIMILAR PRODUCT AT UNFLANGED ELECTRICAL, MECHANICAL AND PLUMBING PENETRATIONS. PRE-MANUFACTURED FLASHING IN LIEU OF FIELD-FABRICATED SHEET METAL OR MEMBRANE FLASHING AND SEALANT IS PREFERRED. NOTE: USE OF PRE-MANUFACTURED FLASHING PANELS DOES NOT PRECLUDE RODENTPROOFING AS DEFINED IN ORSC G2404.7.
13. AT WOOD FLOOR CONSTRUCTION, WE RECOMMEND FILLING VOIDS AT THE UNDERSIDE OF TUBS AND SHOWER PANS WITH INSULATION FOR ACOUSTIC DAMPENING
14. WHERE WALL TILE IS INSTALLED IN TUB AND SHOWER AREAS, GLASS MAT GYPSUM BACKING PANELS (ASTM C1178), FIBER-REINFORCED GYPSUM PANELS (ASTM C1278), NONASBESTOS FIBER-CEMENT BACKER BOARD (ASTM C1288) OR NONASBESTOS FIBER MAT REINFORCED CEMENTITIOUS BACKER UNITS (ASTM C1325) SHALL BE USED PER ORSC R702.4.2. PAPER-FACED GYPSUM BOARD SHALL NOT BE USED.

ROOF FLASHING

1. THE FOLLOWING ROOF CONDITIONS SHOULD BE DETAILED FOR CLARITY:
    a. **HIP/RIDGE**. UNDERLAYMENT SHALL BE LAPPED A MINIMUM OF 6" OVER HIPS AND RIDGES. PROVIDE RIDGE VENTS AND RIDGE BLOCKING NECESSARY FOR ROOF SHEATHING/DIAPHRAGM NAILING.
    b. **VALLEY**. ROOFING/GENERAL CONTRACTOR TO ENSURE, AND DETERMINE OPEN OR CLOSED VALLEY CONSTRUCTION PER SMACNA ARCHITECTURAL SHEET METAL MANUAL FIGURE 4-10. IF OPEN VALLEY, SPECIFY METAL VALLEY FLASHING OR MINERAL-SURFACED ROLL ROOFING. GALVANIZED STEEL SHALL BE 26 GAGE MINIMUM AND NOT LESS THAN 24 INCHES WIDE. SMACNA RECOMMENDS 5" MINIMUM VALLEY EXPOSURE FOR SHINGLES. IF CLOSED VALLEY, VALLEY LINING OF ONE PLY OF SMOOTH ROLL ROOFING COMPLYING WITH ASTM D6380 AND NOT LESS THAN 36 INCHES WIDE. PROHIBIT ROOF PENETRATIONS SUCH AS VENTS WITHIN 24" OF VALLEYS TO AVOID CONFLICT OF FLASHINGS.
2. **EAVE-TO-WALL**. T SHALL BE FLASHED PER ORSC R903.2.1. THE FOLLOWING ITEMS SHALL BE PROVIDED:
    1. A 24"X36" BIBB OF SAF (SELF-ADHERED FLASHING) APPLIED TO THE WALL AT THE EAVE TERMINATION. LAP WITH WATER-RESISTIVE BARRIER.
    2. A RAIN DIVERTER AT EAVE-TO-WALL INTERFACE (A.K.A. KICK-OUT FLASHING). SHEET METAL DIVERTER SHOULD BE SOLDERED WATER-TIGHT OR USE PRE- MANUFACTURED VINYL WITH STEP FLASHING LAPPED OVER. SEE ORSC R905.2.8.3.
    3. HOLD END OF GUTTER AWAY FROM WALL (2" RECOMMENDED) TO ALLOW WALL CLADDING INSTALLATION WITHOUT INTERFERENCE.
1. **ROOF-TO-WALL**. PROVIDE AND LAP ROOF UNDERLAYMENT 8" UP ALL ADJACENT WALLS. AT CONDITIONS USING A BACKER BOARD, LAP THE ROOF UNDERLAYMENT AT LEAST THE FULL HEIGHT OF THE BACKER BOARD. PROVIDE MINIMUM BACKER BOARD OF 1X6. WHERE THE RAKE SIDE OF A PITCHED ROOF MEETS A WALL, PROVIDE STEP FLASHING FASTENED TO THE WALL ONLY, UNLESS OTHERWISE INSTRUCTED BY THE ROOFING MANUFACTURER, TO ALLOW FOR MOVEMENT AT THE ROOF-TO-WALL INTERFACE AND TO MINIMIZE PENETRATIONS OF THE ROOF SURFACE. WHERE THE HEAD OF A ROOF MEETS A WALL, APPLY ROOFING CEMENT BETWEEN METAL FLASHING AND TOP OF SHINGLES TO PRECLUDE WIND-DRIVEN RAIN AND PREVENT UPLIFT.
2. **ROOF PENETRATIONS**. . PLUMBING VENTS, GAS VENTS, CONCENTRIC VENTS, MECHANICAL INTAKE AND EXHAUST VENTS, ATTIC VENTS AND SOLAR EQUIPMENT MOUNTS MAY REQUIRE SPECIFIC DETAILS TO ENSURE PROPER WATERPROOFING, ENSURE INSTALLATION PER MANUFACTURER'S REQUIREMENTS. PROVIDE COMBUSTIBLE CLEARANCES WHERE REQUIRED. TERMINATE PLUMBING VENTS PER OPSC 906.1. TERMINATE GAS VENTS PER OMSC SECTION 802. ALSO SEE ROOFING AND EQUIPMENT MANUFACTURER'S INSTALLATION INSTRUCTIONS. INCREASE HEIGHT OF TERMINATION ABOVE HIGHEST ANTICIPATED SNOW LEVEL.

R317.3.1 FASTENERS FOR PRESERVATIVE-TREATED WOOD.

FASTENERS, INCLUDING NUTS AND WASHERS, FOR PRESERVATIVE-TREATED WOOD SHALL BE OF HOT-DIPPED, ZINC-COATED GALVANIZED STEEL, STAINLESS STEEL, SILICON BRONZE OR COPPER. STAPLES SHALL BE OF STAINLESS STEEL. COATING TYPES AND WEIGHTS FOR CONNECTORS IN CONTACT WITH PRESERVATIVE-TREATED WOOD SHALL BE IN ACCORDANCE WITH THE CONNECTOR MANUFACTURER'S RECOMMENDATIONS. IN THE ABSENCE OF MANUFACTURER'S RECOMMENDATIONS, NOT LESS THAN ASTM A653 TYPE G185 ZINC-COATED GALVANIZED STEEL, OR EQUIVALENT, SHALL BE USED.

EXCEPTIONS:

1.1/2-INCH-DIAMETER (12.7 MM) OR GREATER STEEL BOLTS.
2.FASTENERS OTHER THAN NAILS, STAPLES AND TIMBER RIVETS SHALL BE PERMITTED TO BE OF MECHANICALLY DEPOSITED ZINC-COATED STEEL WITH COATING WEIGHTS IN ACCORDANCE WITH ASTM B695, CLASS 55 MINIMUM.
3.PLAIN CARBON STEEL FASTENERS IN SBX/DOT AND ZINC BORATE PRESERVATIVE-TREATED WOOD IN AN INTERIOR, DRY ENVIRONMENT SHALL BE PERMITTED.

R317.3.2 FASTENINGS FOR WOOD FOUNDATIONS.

FASTENINGS, INCLUDING NUTS AND WASHERS, FOR WOOD FOUNDATIONS SHALL BE AS REQUIRED IN AWC PWF.

R317.3.3 FASTENERS FOR FIRE-RETARDANT-TREATED WOOD USED IN EXTERIOR APPLICATIONS OR WET OR DAMP LOCATIONS.

FASTENERS, INCLUDING NUTS AND WASHERS, FOR FIRE-RETARDANT-TREATED WOOD USED IN EXTERIOR APPLICATIONS OR WET OR DAMP LOCATIONS SHALL BE OF HOT-DIPPED, ZINC-COATED GALVANIZED STEEL, STAINLESS STEEL, SILICON BRONZE OR COPPER. FASTENERS OTHER THAN NAILS, STAPLES AND TIMBER RIVETS SHALL BE PERMITTED TO BE OF MECHANICALLY DEPOSITED ZINC-COATED STEEL WITH COATING WEIGHTS IN ACCORDANCE WITH ASTM B695, CLASS 55 MINIMUM.

R317.3.4 FASTENERS FOR FIRE-RETARDANT-TREATED WOOD USED IN INTERIOR APPLICATIONS.

FASTENERS, INCLUDING NUTS AND WASHERS, FOR FIRE-RETARDANT-TREATED WOOD USED IN INTERIOR LOCATIONS SHALL BE IN ACCORDANCE WITH THE MANUFACTURER'S RECOMMENDATIONS. IN THE ABSENCE OF THE MANUFACTURER'S RECOMMENDATIONS, SECTION R317.3.3 SHALL APPLY.

HEALTH AND SAFETY:

ALL NEW SMOKE AND CO ALARMS SHALL BE HARDWIRED WITH BATTERY BACKUP AND INTERCONNECTED WITHIN THE DWELLING UNIT ONLY SMOKE ALARMS SHALL BE LOCATED WITHIN EACH SLEEPING ROOM, IMMEDIATELY OUTSIDE OF EACH SLEEPING ROOM, AND ON EACH LEVEL OF THE DWELLING.
CO ALARMS SHALL BE LOCATED WITHIN 15' OUTSIDE OF EACH BEDROOM DOOR.
ALL ALARMS SHALL BE CROSS LISTED FOR INTERCONNECTION.

FANS AND SMOKE DETECTORS

FANS IN BATHING AREAS SHALL BE CONTROLLED BY TIMER.
SMOKE DETECTORS SHALL BE 110V BATTERY BACKUP.

WINDOW GLAZING – SECTION 312.2

R308.4 HAZARDOUS LOCATIONS. THE LOCATIONS SPECIFIED IN SECTIONS R308.4.1 THROUGH R308.4.7 SHALL BE CONSIDERED TO BE SPECIFIC HAZARDOUS LOCATIONS FOR THE PURPOSES OF GLAZING.

- CONTRACTOR TO VERIFY REQUIRED TEMPERED GLAZING LOCATIONS

1 GENERAL NOTES
8 1/4" = 1'-0"

FRAMING NOTES

1. WOOD FRAMING MEMBER GRADES ARE AS FOLLOWS UNLESS, OTHERWISE NOTED ON THE DRAWINGS:

A. POSTS, BEAMS, HEADERS, JOISTS AND RAFTERS - MIN. # 2 DOUG FIR OR LVL'S - 2650 FB & 1.8E	
B. PLATES, BLOCKING AND BRIDGING -	NO. 3 DOUG FIR
C. STUDS -	STUD GRADE DOUG FIR
D. T&G DECKING -	STUD & BETTER GRADE DOUG FIR
E. WALL SHEATHING -	7/16" OSB
F. GLU-LAM -	24-F V-4 (OR 24-F V-8 PER PLAN)

2. UNLESS OTHERWISE NOTED ON DRAWINGS, ALL EXTERIOR WINDOW AND DOOR HEADERS ARE TO BE 4x12 DOUG FIR No. 2
3. PROVIDE DOUBLE JOISTS UNDER ALL BEARING PARTITIONS.
4. DESIGN LOADS:

ROOF -	25 P.S.F. (LL)
FLOOR -	40 P.S.F. (LL)
STAIRS -	100 P.S.F. (LL)
GARAGE FLOOR -	50 P.S.F. (LL)
DECKS -	60 P.S.F. (LL)

5. SOIL BEARING PRESSURE IS ASSUMED TO BE 1500 P.S.F.
6. DECK AND BALCONY GUARDRAILS TO BE 36" HIGH WITH MAXIMUM OPENING SPACES SO THAT A 4" SPHERE CAN NOT PASS THROUGH.
7. PROVIDE SIMPSON H2.5A TRUSS CONNECTORS AT EACH TRUSS/RAFTER - UNLESS NOTED OTHERWISE ON PLAN
8. ALL EXTERIOR FASTENERS, EXPOSED TO THE ELEMENTS TO BE STAINLESS STEEL OR GALVANIZED. INCLUDING NAIL, STAPLES, CLIPS, ETC.

GYPSUM BOARD FINISH

1. ERECT SINGLE LAYER 1/2" STANDARD, 5/8" F.R. AND 1/2" MOISTURE RESISTANT GYPSUM BOARD IN MOST ECONOMICAL DIRECTIONS, WITH ENDS OCCURRING OVER FIRM BACKING.

ROOF VENTILATION

R806.1 VENTILATION REQUIRED.

ENCLOSED ATTICS AND ENCLOSED RAFTER SPACES FORMED WHERE CEILINGS ARE APPLIED DIRECTLY TO THE UNDERSIDE OF ROOF RAFTERS SHALL HAVE CROSS VENTILATION FOR EACH SEPARATE SPACE BY VENTILATING OPENINGS PROTECTED AGAINST THE ENTRANCE OF RAIN OR SNOW. VENTILATION OPENINGS SHALL HAVE AT LEAST DIMENSION OF 1/16" MINIMUM AND 1/4" MAXIMUM. VENTILATION OPENINGS HAVING AT LEAST DIMENSION LARGER THAN 1/4" SHALL BE PROVIDED WITH CORROSION-RESISTANT WIRE CLOTH SCREENING, HARDWARE CLOTH, OR SIMILAR MATERIAL. OPENINGS IN ROOF FRAMING MEMBERS SHALL CONFORM WITH THE REQUIREMENTS OF SECTION R802.7

806.2 MINIMUM AREA.

THE TOTAL NET FREE VENTILATING AREA SHALL NOT BE LESS THAN 1/150 OF THE AREA OF THE SPACE VENTILATED EXCEPT THAT REDUCTION OF THE TOTAL AREA TO 1/300 IS PERMITTED PROVIDED THAT AT LEAST 50% AND NOT MORE THAN 80% OF THE REQUIRED VENTILATING AREA IS PROVIDED WITH VENT OPENINGS LOCATED IN THE UPPER PORTION OF THE SPACE TO BE VENTILATED
AT LEAST 3' ABOVE THE EAVE OR CORNICE VENTS WITH THE BALANCE OF THE REQUIRED VENTILATION PROVIDED BY EAVE OR CORNICE VENTS, AS AND ALTERNATIVE, THE NET FREE CROSS-VENTILATION AREA MAY BE REDUCED TO 1/300 WHEN A VAPOR RETARDER HAVING A TRANSMISSION RATE NOT EXCEEDING 1 PERM IS INSTALLED ON THE WARM IN WINTER SIDE OF THE CEILING.

R806.3 VENT AND INSULATION CLEARANCE.

WHERE EAVE OR CORNICE VENTS ARE INSTALLED, INSULATION SHALL NOT BLOCK THE FREE FLOW OF AIR. A MINIMUM OF 1 INCH SPACE SHALL BE PROVIDED BETWEEN THE INSULATION AND THE ROOF SHEATHING AND AT THE LOCATION OF THE VENT.

905.2.7 UNDERLAYMENT APPLICATION

- FOR ROOF SLOPES FROM 2 UNITS VERTICAL IN 12 UNITS HORIZONTAL UP TO 4 UNITS VERTICAL IN 12 UNITS HORIZONTAL, UNDERLAYMENT SHALL BE TWO LAYERS APPLIED IN THE FOLLOWING MANNER: APPLY A 19 INCH STRIP OF UNDERLAYMENT FELT PARALLEL TO AND STARTING AT THE EAVES, FASTENED SUFFICIENTLY TO HOLD IN PLACE. STARTING AT THE EAVE, APPLY 36 INCH WIDE SHEETS OF UNDERLAYMENT, OVERLAPPING SUCCESSIVE SHEETS 19 INCHES, AND FASTENED SUFFICIENTLY TO HOLD IN PLACE. DISTORTIONS IN THE UNDERLAYMENT SHALL NOT INTERFERE WITH THE ABILITY OF THE SHINGLES TO SEAL.

-FOR ROOF SLOPES OF 4 UNITS IN 12 OR GREATER, UNDERLAYMENT SHALL BE ONE LAYER APPLIED IN THE FOLLOWING MANNER: UNDERLAYMENT SHALL BE APPLIED SHINGLE FASHION, PARALLEL TO AND STARTING FROM THE EAVE AND LAPPED 2 INCHES, FASTENED SUFFICIENTLY TO HOLD IN PLACE. DISTORTIONS IN THE UNDERLAYMENT SHALL NOT INTERFERE WITH THE ABILITY OF THE SHINGLES TO SEAL. END LAPS SHALL BE OFFSET BY 6'.

- UNDERLAYMENT SHALL BE INSTALLED OVER THE DRIP EDGE PER ORSC R905.2.8.5. IF ICE BARRIER UNDERLAYMENT IS REQUIRED PER LOCAL MUNICIPAL CODE, THE ICE BARRIER SHALL EXTEND FROM THE LOWEST EDGES OF ALL ROOF SURFACES TO A POINT NOT LESS THAN 24 INCHES INSIDE THE EXTERIOR WALL LINE OF THE BUILDING PER ORSC R905.1.2.

-UNDERLAYMENT SHALL BE INSTALLED UNDER THE DRIP EDGE PER ORSC R905.2.8.5. SHINGLES SHOULD BE ADHERED TO DRIP EDGE WITH A CONTINUOUS BEAD OF ROOFING CEMENT. ASPHALT ROOF SHINGLES SHOULD OVERHANG EAVES AND RAKES 1/2".

- OUTLOOKERS REQUIRED TO SUPPORT ROOF SHEATHING AND BARGE BOARD AT OVERHANG.

RADON CONTROL ENTRY ROUTES:

CONDENSATE DRAINS:

CONDENSATE DRAINS SHALL BE TRAPPED OR ROUTED THROUGH NON-PERFORATED PIPE TO DAYLIGHT

SUMPS:

SUMP PITS OPEN TO SOIL OR SERVING AS TERMINATION POINT FOR SUB-SLAB OR EXTERIOR DRAIN TILE LOOPS SHALL BE COVERED WITH GASKETED OR OTHERWISE SEALED LID. SUMPS USED AS THE SUCTION POINT IN A SUB-SLAB DEPRESSURIZATION SYSTEM SHALL HAVE A LID DESIGNED TO ACCOMMODATE THE VENT PIPE. SUMPS USED AS A FLOOR DRAIN SHALL HAVE A LID EQUIPPED WITH TRAPPED INLET

R324.7.3 SOLAR INTERCONNECTION PATHWAY AND TERMINATION.

A SQUARE METAL JUNCTION BOX NOT LESS THAT 4 INCHES BY 4 INCHES (102 mm BY 102 mm) WITH A METAL BOX COVER SHALL BE PROVIDED WITHIN 24" (610 mm) HORIZONTALLY AND VERTICALLY OF THE MAIN ELECTRICAL PANEL. A MINIMUM 3/4" (19 mm) NONFLEXIBLE METAL RACEWAY WITH A PULL STRING SHALL EXTEND FROM THE JUNCTION BOX TO A CAPPED ROOF TERMINATION OR TO AN ACCESSIBLE LOCATION IN THE ATTIC WITH A VERTICAL CLEARANCE OF NOT LESS THAN 36 INCHES (914 mm).

> WHERE THE RACEWAY TERMINATES IN THE ATTIC, THE TERMINATION SHALL BE IN A METAL JUNCTION BOX NOT LESS THAN 4 INCHES BY 4 INCHES (102 mm BY 102 mm) WITH A BOX COVER LOCATED NOT LESS THAN 6 INCHES (152 mm) ABOVE THE INSULATION. THE JUNCTION BOX SHALL BE MARKED AS "RESERVED FOR SOLAR".
>
> > EXCEPTION: IN LIEU OF 3/4" (19 mm) NONFLEXIBLE METAL RACEWAY, A MINIMUM OF TWO NO. 10 COPPER 3-WIRE WITH GROUND METAL CLAD (MC) CABLE SHALL BE INSTALLED BETWEEN THE JUNCTION BOXES WITH 6 INCHES (152 mm) OF FREE CONDUCTOR IN EACH JUNCTION BOX.

R324.7.4 ELECTRICAL SERVICE RESERVED SPACE.

THE MAIN ELECTRICAL SERVICE PANEL, OR OTHER APPROVED ELECTRICAL PANEL THAT WOULD SERVE THE SOLAR PHOTOVOLTAIC SYSTEM, SHALL HAVE A RESERVED SPACE TO ALLOW INSTALLATION OF A DUAL-POLE CIRCUIT BREAKER FOR FUTURE INSTALLATION. THESE SPACES SHALL BE LABELED "RESERVED FOR FUTURE SOLAR."

R317.1 LOCATION REQUIRED.

PROTECTION OF WOOD AND WOOD-BASED PRODUCTS FROM DECAY SHALL BE PROVIDED IN THE FOLLOWING LOCATIONS BY THE USE OF NATURALLY DURABLE WOOD OR WOOD THAT IS PRESERVATIVE-TREATED IN ACCORDANCE WITH AWPA U1.

1.WOOD JOISTS OR THE BOTTOM OF A WOOD STRUCTURAL FLOOR WHERE CLOSER THAN 18 INCHES (457 MM) OR WOOD GIRDERS WHERE CLOSER THAN 12 INCHES (305 MM) TO THE EXPOSED GROUND IN CRAWL SPACES OR UNEXCAVATED AREA LOCATED WITHIN THE PERIPHERY OF THE BUILDING FOUNDATION.
2.WOOD FRAMING MEMBERS AND SILL PLATES IN CONTACT WITH CONCRETE OR MASONRY FOUNDATION WALLS.
3.SILLS AND SLEEPERS ON A CONCRETE OR MASONRY SLAB THAT IS IN DIRECT CONTACT WITH THE GROUND UNLESS SEPARATED FROM SUCH SLAB BY AN IMPERVIOUS MOISTURE BARRIER SUCH AS 6-MIL-THICK (0.15 MM) POLYETHYLENE SHEETING OR EQUIVALENT.
4.THE ENDS OF WOOD GIRDERS ENTERING EXTERIOR MASONRY OR CONCRETE WALLS HAVING CLEARANCES OF LESS THAN 1/2 INCH (12.7 MM) ON TOPS, SIDES AND ENDS.
5.WOOD SIDING, SHEATHING AND WALL FRAMING ON THE EXTERIOR OF A BUILDING HAVING A CLEARANCE OF LESS THAN 6 INCHES (152 MM) FROM THE GROUND OR LESS THAN 2 INCHES (51 MM) MEASURED VERTICALLY FROM CONCRETE STEPS, PORCH SLABS, PATIO SLABS AND SIMILAR HORIZONTAL SURFACES EXPOSED TO THE WEATHER.
6.WOOD STRUCTURAL MEMBERS SUPPORTING MOISTURE-PERMEABLE FLOORS OR ROOFS THAT ARE EXPOSED TO THE WEATHER, SUCH AS CONCRETE OR MASONRY SLABS, UNLESS SEPARATED FROM SUCH FLOORS OR ROOFS BY AN IMPERVIOUS MOISTURE BARRIER.
7.WOOD FURRING STRIPS OR OTHER WOOD FRAMING MEMBERS ATTACHED DIRECTLY TO THE INTERIOR OF EXTERIOR MASONRY WALLS OR CONCRETE WALLS BELOW GRADE EXCEPT WHERE AN APPROVED VAPOR RETARDER IS APPLIED BETWEEN THE WALL AND THE FURRING STRIPS OR FRAMING MEMBERS.

R317.1.1 FIELD TREATMENT.

FIELD-CUT ENDS, NOTCHES AND DRILLED HOLES OF PRESERVATIVE-TREATED WOOD SHALL BE TREATED IN THE FIELD IN ACCORDANCE WITH AWPA M4.

R317.1.2 GROUND CONTACT.

ALL WOOD IN CONTACT WITH THE GROUND, EMBEDDED IN CONCRETE IN DIRECT CONTACT WITH THE GROUND OR EMBEDDED IN CONCRETE EXPOSED TO THE WEATHER THAT SUPPORTS PERMANENT STRUCTURES INTENDED FOR HUMAN OCCUPANCY SHALL BE APPROVED PRESSURE-PRESERVATIVE-TREATED WOOD SUITABLE FOR GROUND CONTACT USE, EXCEPT THAT UNTREATED WOOD USED ENTIRELY BELOW GROUNDWATER LEVEL OR CONTINUOUSLY SUBMERGED IN FRESH WATER SHALL NOT BE REQUIRED TO BE PRESSURE-PRESERVATIVE TREATED.

R317.1.4 WOOD COLUMNS.

WOOD COLUMNS SHALL BE APPROVED WOOD OF NATURAL DECAY RESISTANCE OR APPROVED PRESSURE-PRESERVATIVE-TREATED WOOD.

EXCEPTIONS:

1.COLUMNS EXPOSED TO THE WEATHER OR IN BASEMENTS WHERE SUPPORTED BY CONCRETE PIERS OR METAL PEDESTALS PROJECTING 1 INCH (25 MM) ABOVE A CONCRETE FLOOR OR 6 INCHES (152 MM) ABOVE EXPOSED EARTH AND THE EARTH IS COVERED BY AN APPROVED IMPERVIOUS MOISTURE BARRIER SUCH AS 6-MIL-THICK (0.15 MM) POLYETHYLENE SHEETING OR EQUIVALENT.
2.COLUMNS IN ENCLOSED CRAWL SPACES OR UNEXCAVATED AREAS LOCATED WITHIN THE PERIPHERY OF THE BUILDING WHERE SUPPORTED BY A CONCRETE PIER OR METAL PEDESTAL AT A HEIGHT MORE THAN 8 INCHES (203 MM) FROM EXPOSED EARTH AND THE EARTH IS COVERED BY AN IMPERVIOUS MOISTURE BARRIER.
3.DECK POSTS SUPPORTED BY CONCRETE PIERS OR METAL PEDESTALS PROJECTING NOT LESS THAN 1 INCH (25 MM) ABOVE A CONCRETE FLOOR OR 6 INCHES (152 MM) ABOVE EXPOSED EARTH.

R317.1.5 EXPOSED GLUED-LAMINATED TIMBERS.

THE PORTIONS OF GLUED-LAMINATED TIMBERS THAT FORM THE STRUCTURAL SUPPORTS OF A BUILDING OR OTHER STRUCTURE AND ARE EXPOSED TO WEATHER AND NOT PROPERLY PROTECTED BY A ROOF, EAVE OR SIMILAR COVERING SHALL BE PRESSURE TREATED WITH PRESERVATIVE, OR BE MANUFACTURED FROM NATURALLY DURABLE OR PRESERVATIVE-TREATED WOOD.

TABLE R602.3(1) FASTENING SCHEDULE

ITEM	DESCRIPTION OF BUILDING ELEMENTS	NUMBER & TYPE OF FASTENER[A,B,C]	SPACING AND LOCATION
	FLOOR		
22	JOIST TO SILL, TOP PLATE OR GIRDER	4-8d box (2-1/2" × 0.113")	TOE NAIL
23	RIM JOIST, BAND JOIST OR BLOCKING TO SILL OR TOP PLATE (ROOF APPLICATIONS ALSO)	8d common (2-1/2" × 0.131")	6" O.C. TOE NAIL
24	1" × 6" SUBFLOOR OR LESS TO EACH JOIST	3-8d box (2-1/2" × 0.113")	FACE NAIL
25	2" SUBFLOOR TO JOIST OR GIRDER	3-16d box (3-1/2" × 0.135")	BLIND AND FACE NAIL
26	2" PLANKS (PLANK & BEAM—FLOOR & ROOF)	3-16d box (3-1/2" × 0.135")	AT EACH BEARING, FACE NAIL
27	BAND OR RIM JOIST TO JOIST	3-16d common (3-1/2" × 0.162")	END NAIL
28	BUILT-UP GIRDERS AND BEAMS, 2-INCH LUMBER LAYERS	20d common (4" × 0.192")	NAIL EACH LAYER AS FOLLOWS: 32" O.C. AT TOP AND BOTTOM AND STAGGERED.
		And: 2-20d common (4" × 0.192")	FACE NAIL AT ENDS AND AT EACH SPLICE
29	LEDGER STRIP SUPPORTING JOISTS OR RAFTERS	4-16d box (3-1/2" × 0.135")	AT EACH JOIST OR RAFTER, FACE NAIL
30	BRIDGING OR BLOCKING TO JOIST, RAFTER OR TRUSS	2-10d box (3" × 0.128")	EACH END, TOE NAIL

ITEM	DESCRIPTION OF BUILDING ELEMENTS	NUMBER & TYPE OF FASTENER[A,B,C]	SPACING OF FASTENERS	
			EDGES (INCHES)[h]	INTERMEDIATE SUPPORTS[c,e] (INCHES)
	WOOD STRUCTURAL PANELS, SUBFLOOR, ROOF AND INTERIOR WALL SHEATHING TO FRAMING AND PARTICLEBOARD WALL SHEATHING TO FRAMING [SEE TABLE R602.3(3) FOR WOOD STRUCTURAL PANEL EXTERIOR WALL SHEATHING TO WALL FRAMING]			
31	3/8" — 1/2"	6d common (2" × 0.113" x 0.266" head) (subfloor, wall)	6	12
		8d common (2-1/2" × 0.131") nail (roof)	6	6[f]
32	19/32" — 3/4"	8d common (2 1/2" × 0.131") nail,(subfloor,wall)	6	12
		8d common (2 1/2" × 0.131") nail, (roof)	6[f]	6[f]
		Deformed 2 3/8" × 0.113" × 0.266" head (wall or subfloor)	6	12
33	7/8" — 1-1/4"	10d common (3" × 0.148") nail	6	12
	OTHER WALL SHEATHING[g]			
34	1/2" STRUCTURAL CELLULOSIC FIBERBOARD SHEATHING	1-1/2" x 0.120" galvanized roofing nail	3	6
35	25/32" STRUCTURAL CELLULOSIC FIBERBOARD SHEATHING	1-3/4" x 0.120" galvanized roofing nail	3	6
36	1/2" GYPSUM SHEATHING[d]	1-1/2" x 0.120" galvanized roofing nail	7	7
37	5/8" GYPSUM SHEATHING[d]	1-3/4" x 0.120" galvanized roofing nail	7	7
	WOOD STRUCTURAL PANELS, COMBINATION SUBFLOOR UNDERLAYMENT TO FRAMING			
38	3/4" AND LESS	8d common (2-1/2" × 0.131") nail	6	12
39	7/8" — 1"	8d common (2-1/2" × 0.131") nail	6	12
40	1-1/8" — 1-1/4"	10d common (3" × 0.148") nail	6	12

For SI: 1 inch = 25.4 mm, 1 foot = 304.8 mm, 1 mile per hour = 0.447 m/s; 1 ksi = 6.895 MPa.

a. Nails are smooth-common, box or deformed shanks except where otherwise stated. Nails used for framing and sheathing connections are carbon steel and shall have minimum average bending yield strengths as shown: 80 ksi for shank diameter of 0.192 inch (20d common nail), 90 ksi for shank diameters larger than 0.142 inch but not larger than 0.177 inch, and 100 ksi for shank diameters of 0.142 inch or less. Connections using nails and staples of other materials, such as stainless steel, shall be designed in accordance with Section R301.1.3 or approved under Section R104.11.
b. RSRS-01 is a Roof Sheathing Ring Shank nail meeting the specifications in ASTM F1667.
c. Nails shall be spaced at not more than 6 inches on center at all supports where spans are 48 inches or greater.
d. Four-foot by 8-foot or 4-foot by 9-foot panels shall be applied vertically.
e. Spacing of fasteners not included in this table shall be based on Table R602.3(2).
f. For wood structural panel roof sheathing attached to gable end roof framing and to intermediate supports within 48 inches of roof edges and ridges, nails shall be spaced at 4 inches on center where the basic design wind speed is greater than 130 mph in Exposure B or greater than 110 mph in Exposure C.
g. Gypsum sheathing shall conform to ASTM C1396 and shall be installed in accordance with ASTM C1280 or GA 253. Fiberboard sheathing shall conform to ASTM C208.
h. Spacing of fasteners on floor sheathing panel edges applies to panel edges supported by framing members and required blocking and at floor perimeters only. Spacing of fasteners on roof sheathing panel edges applies to panel edges supported by framing members and required blocking. Blocking of roof or floor sheathing panel edges perpendicular to the framing members need not be provided except as required by other provisions of this code. Floor perimeter shall be supported by framing members or solid blocking.
i. Where a rafter is fastened to an adjacent parallel ceiling joist in accordance with this schedule, provide two toe nails on one side of the rafter and toe nails from the ceiling joist to top plate in accordance with this schedule. The toe nail on the opposite side of the rafter shall not be required.

BUILDERS
DESIGN INC
COMMERCIAL · RESIDENTIAL · REMODELING
11125 NE WEIDLER ST. · PORTLAND, OR 97220
PHONE: (503) 252-3453 · FAX: (503) 252-3454
EMAIL: BUILDERSDESIGN@GMAIL.COM

All ideas, arrangements, drawings and plans set forth on this sheet are the original work product of, owned by and are the property of Builders Design Inc., an Oregon corporation, and use of this said work product is limited to a specified project for the persons named hereon, and for the construction of one building. Any use, reuse or disclosure of said plans, reproductions or project, ideas, designs and / or arrangements, other than by Builders Design Inc., is strictly prohibited without the written permission of Builders Design Inc. Written dimensions on these drawings shall have precedence over scaled dimensions; contractors shall verify, and be responsible for all dimensions and conditions on the job and this office must be notified of any variations from the dimensions and conditions shown by these drawings. Shop details must be submitted to this office for approval before proceeding with fabrication. Supervision is not included unless specified in work contract.

SENTAUR CONSTRUCTION

3316 SE Evergreen St, Milwaukie, OR 97222

GENERAL NOTES

No.	Date	Issued by

Project number:	13844
Date:	2/2/2026 4:57:55 PM
Drawn by:	CHT
Area:	2,311 ft²
Scale	1/4" = 1'-0"

GENERAL STRUCTURAL NOTES

DESIGN CRITERIA Builders Design Sentaur SE Evergreen St (Milwaukie) 5970126

1. Building code: 2023 ORSC
   - Model building code: 2021 IRC / 2021 IBC
   - Use and occupancy classification: R (Residential - 1-unit dwelling)
   - Risk Category: II (Not risk categories I, III, IV)

3. Earthquake Design Data

IRC Seismic design category	D1
Spectral Response Accelerations	
SS	=0.877 g
S1	=0.388 g
Fa	=1.2
Fv	=1.912
SMS	=1.05
SM1	=0.74
SDS	=0.7
SD1	=0.49
Seismic Force Resisting System	
Light-frame wood walls (wood sheathing)	
Equivalent Lateral Force Procedure - Design Values	
Seismic Importance Factor, Ie	=1.00
Approximate Period, Ta	=0.178 s
Response Modification Factor, R	=6.5
System Overstrength Factor, Omega	=3.0
Deflection Amplification Factor, Cd	=4.0
Seismic Response Coefficient, Cs	=0
Seismic Base Shear, V	=8.2 k

4. Wind Design Data

Exposure Category	=B
Basic design wind speed, V	=98 mph
Internal Pressure Coeff., Gcpi	=0.18
Basic velocity pressure	=20.7 psf
Component & Cladding Effective Area	=25 sf (walls), 171 sf (roof)
Component & Cladding Pressures*	
Walls Within 4 ft of corner	=18.4 psf
Walls away from corner	=15.4 psf
Roof Eaves	=32.9 psf
Roof Interior Zones	=30.3 psf

*All C&C conditions not reported are the responsibility of the design professional

6. Serviceability Criteria

Deflection Limits	LLD	TLD
Roof members (supporting plaster ceiling)	L/360	L/240
Floor members (joists)	L/480	L/240
Floor members (beams/headers)	L/360	L/240
Exterior walls and interior partitions (with other brittle finishes)	L/240	N/A

GENERAL

1. Construction documents are valid for a single use at the project location and shall not be reused, copied, or reproduced without written approval of the registered design professional in responsible charge.
2. General notes and typical details are provided as a supplement to the construction documents and apply where specific notes and details are not available. Specific notes and structural details shall take precedence over general notes and typical details. Structural requirements shown in the framing plans and in structural details shall take precedence over structural notes indicated in architectural sections.
3. In all cases, “contractor” shall refer to the contractor or sub-contractor responsible for the trade specifically referred to in these notes. The contractor shall meet all requirements set forth in the construction documents and shall include the costs associated with these requirements in their bid.
4. Printed dimensions shall take precedence over scales shown on construction documents. The registered design professional in responsible charge does not warrant the accuracy of scaled dimensions.
5. Approval by the inspector does not imply approval by the registered design professional in responsible charge. Any visit to the job site by representatives of the engineer is solely for the purpose of observation and does not constitute approval of the work performed by the contractor or subcontractors.
6. The registered design professional in responsible charge assumes no liability for the accuracy, completeness, or code compliance of architectural, electrical, mechanical, drainage, or other non-structural specifications.
7. Omissions in and conflicts between the various elements of the construction documents shall be brought to the immediate attention of the registered design professional in responsible charge and shall be resolved by the same before proceeding with any work involved.
8. Requests for substitutions shall be submitted in writing to the registered design professional in responsible charge and shall include the reasons for the request and any cost differentials. Substitutions are not allowed unless approved in writing by the registered design professional in responsible charge. Failure to follow plans and construction documents constitutes a change in project scope.
9. The contractor shall become familiar with all portions of the construction documents and shall ensure that all subcontractors are familiar with those portions pertaining to their area of work. The contractor shall verify all site conditions, dimensions, slopes, and elevations, and shall coordinate all doors, windows, non-bearing interior and exterior walls, elevations, slopes, stairs, curbs, drains, recesses, depressions, railings, waterproofing, finishes, chamfer, kerfs, and so forth with the architect and with all subcontractors. The contractor shall immediately notify the registered design professional in responsible charge regarding actual conditions which are not in agreement with the construction documents.
10. The contractor is responsible for the method, means, and sequence of all structural erection except when specifically noted otherwise in the construction documents. The contractor shall provide temporary shoring and bracing, providing adequate vertical and lateral support during erection. Shoring and bracing shall remain in place until all permanent members are placed and all final connections are completed.
11. The contractor is responsible for standard connections, unless noted otherwise. The contractor shall obtain additional assistance from the registered design professional in responsible charge for non-standard connections. Connections must carry the bearing capacity of the member and any uplift or seismic forces generated in the member. Special consideration shall be given to prevent crushing, splitting, cracking, and the like.
12. The contractor shall verify sizes, locations, loads, and equipment anchorage in the field with the equipment manufacturer or supplier prior to fabrication or installation of supporting structures.
13. During and after construction, the contractor and owner shall keep loads on the structure within the limits of the design loads.
14. Only an authorized representative of Acute Engineering may make changes to these contract drawings. Acute Engineering shall not be held liable for any changes made directly or indirectly to these plans without express written authorization.
15. Acute Engineering shall not be held liable for construction performed prior to obtaining a final building permit from the authority having jurisdiction.

CONCRETE

1. Concrete materials, quality control, and construction shall comply with 2021 IBC Chapter 19 and ACI 318-19.
2. Only one grade or type of concrete shall be poured on the site at any given time.
3. Materials
   - 3.1. Cementitious Materials:
     - 3.1.1. Portland Cement (ASTM C150)
       - 3.1.1.1. Type I or II for exposure class S0
       - 3.1.1.2. Type II or V for exposure class S1
       - 3.1.1.3. Type V for exposure class S2 and S3
     - 3.1.2. Fly Ash (ASTM C618, Class F) shall be no more than 25% of the total weight of cementitious material in the mix design.
   - 3.2. Aggregates (ASTM C33): nominal maximum size of coarse aggregate shall not be larger than 1/5 the narrowest dimension between forms, nor 1/3 the depth of slabs, nor 3/4 the minimum clear spacing between reinforcing bars or wires, tendons, or ducts (ACI 318-19 26.4.2.1).
   - 3.3. Water used in mixing concrete shall conform to ASTM C1602 (ACI 318-19 26.4.1.4.1).
   - 3.4. Admixtures shall be subject to prior approval by the registered design professional in responsible charge (ACI 318-19 26.4.1.5.1(b)).
   - 3.5. Tolerance on specified air content shall be plus/minus 1.5%.
4. Concrete mix design requirements shall be as follows:

Element	Exposure Class	% Air	Max W/C Ratio	f'c at 28 days
Footings	F0, S0, W0, C1	-	0.55	3,000 psi
Interior Slabs on Grade	F0, S0, W0, C0	-	0.55	3,000 psi
Exterior Slabs on Grade	F1, S0, W0, C1	6%	0.45	4,000 psi
Suspended Slabs	F0, S0, W0, C0	-	0.45	4,000 psi
Walls (R-2 and R-3 occupancies)	F1, S0, W0, C1	6%	0.45	3,000 psi
Walls (All other occupancies)	F1, S0, W0, C1	6%	0.45	4,000 psi

5. Steel Reinforcement
   - 5.1. Deformed bars: fy = 60 ksi (ASTM A615)
   - 5.2. Welded plain wire: fy = 60 ksi (ASTM A1064)
   - 5.3. Deformed Bar Anchors (DBA) (ASTM A1064)
   - 5.4. Headed Stud Anchors (HSA) (ASTM A108)
   - 5.5. At the time concrete is placed, reinforcement shall be free from ice, mud, oil, or other deleterious coatings that decrease bond (ACI 318-19 26.6.1.2(d)).
   - 5.6. Reinforcement shall be accurately placed and adequately supported before concrete is placed, and shall be secured against displacement (ACI 318-19 26.6.2.2).
   - 5.7. Details of reinforcement shall conform to ACI 318-19 Chapter 25.
6. All splices in continuous concrete reinforcing bars shall lap a minimum of 40 bar diameters. All splices shall be made in a compression zone unless noted otherwise. All continuous reinforcing shall terminate with a 90-degree bend or with separate corner bars.
7. Minimum concrete cover shall be as follows:

Condition	Condition	Reinforcement	Minimum Cover
Concrete cast against and exposed to earth	All	All	3 in.
Concrete exposed to earth or weather	All	No. 5 and smaller	1-1/2 in.
		No. 6 through No. 18	2 in.
Concrete not exposed to earth or weather	Slabs, joists, walls	No. 11 and smaller	3/4 in.
		No. 14 and No. 18	1-1/2 in.
	Beams, columns, ties	All	1-1/2 in.

WOOD

1. Wood materials, quality, and construction shall conform to 2021 IBC Chapter 23 and Table 2304.10.
   - 1.1. Structural lumber (2021 IBC 2303.1.1-9, 2021 NDS)
     - 1.1.1. Bearing walls: See Wood Section 5.9
     - 1.1.2. Posts: Douglas-Fir Larch (DF) No. 2 (ASTM D1990, DOC PS 20)
     - 1.1.3. Sill plates: Preservative-treated wood, redwood (AWPA U1 M4)
     - 1.1.4. Naturally durable or preservative-treated wood shall be used where structural lumber is in contact with masonry or concrete (2021 IBC 2304.12).
   - 1.2. Wood structural panels (2021 IBC 2304.8, 2021 NDS 9.1.3)
     - 1.2.1. Roof, floor, and wall sheathing: oriented strand board (OSB) (DOC PS 1,2).
     - 1.2.2. Sheathing shall be manufactured with exterior glue and not less than 4X8 feet, except at boundaries and at changes in framing (2021 IBC 2305.1, AWC SDPWS-2021).
     - 1.2.3. Wall sheathing
       - 1.2.3.1. Oriented strand board (OSB) (DOC PS 1,2)
       - 1.2.3.2. All panel joints in walls shall occur over studs or blocking using a minimum of 8d common nails spaced a maximum of 6 inches at panel edges and 12 inches at intermediate framing (2021 IBC 2306.3).
     - 1.5.4. Roof and floor sheathing shall be placed perpendicular to supporting framing. Stagger sheathing joints.
     - 1.5.5. Floor sheathing shall be nailed and glued to supports.
     - 1.5.6. Nails shall be located no closer than 3/8” to the edge of a sheathing panel.
2. Fasteners
   - 2.1. Nails (2021 IBC 2303.6, 2021 NDS Table L4) (ASTM F1667)

Pennyweight	Common	Box	Sinker
8d	0.131" X 2.5"	0.113" X 2.5"	0.113" X 2.375"
10d	0.148" X 3.0"	0.128" X 3.0"	0.120" X 2.875"
16d	0.162" X 3.5"	0.135" X 3.5"	0.148" X 3.25"

   - 2.2. Bolts (2021 NDS 12.1.3, Table L1)
     - 2.2.1. Anchor bolts: A307 with a 3” X 3” X 0.229” inch washer (2021 IBC 2308.3.1) and 7" min embedment.
   - 2.3. Fasteners in preservative-treated and fire-retardant-treated wood shall be of hot dipped zinc-coated galvanized steel, silicon bronze or copper (2021 IBC 2304.10.5).
   - 2.4. Sheathing fasteners shall be driven so the head or crown is flush with the sheathing surface (2021 IBC 2304.10.2).
3. Wall construction (2021 IBC 2308.5)
   - 3.1. Studs shall be placed with their wide dimension perpendicular to the wall. Not less than three studs shall be installed at each corner of an exterior wall (2021 IBC 2308.5.2).
   - 3.2. Bearing and exterior wall studs shall be capped with (2) 2-inch-thick nominal top plates, have a width at least equal to the width of the studs, and shall be installed to provide overlapping at corners and intersections with other partitions. End joints in partitions shall be offset at least 48 inches and shall be nailed with not less than eight 16d common face nails on each side of the joint. (2021 IBC 2308.5.3.2).
   - 3.3. Studs shall have full bearing on a 2-inch thick nominal (or larger) bottom plate or sill having a width at least equal to the width of the stud (2021 IBC 2308.5.3.1).
   - 3.4. In exterior walls and bearing partitions, a wood stud shall not be cut or notched in excess of 25 percent of its depth. In nonbearing partitions, a stud shall not be cut or notched in excess of 40 percent of its depth (2021 IBC 2308.5.9).
   - 3.5. The diameter of bored holes in wood studs shall not exceed 40 percent of the stud depth. The edge of the bored hole shall not be closer than 5/8” to the edge of the stud. Bored holes shall not be located at the same section of stud as a cut or notch (2021 IBC 2308.5.10).
   - 3.6. Studs shall be spaced at 16 inches on center for exterior walls, interior bearing walls, and shear walls, unless noted otherwise on the plans.
   - 3.7. Exterior walls shall have flat blocking at all sheathing panel edges, unless noted otherwise.
   - 3.8. For exterior and interior bearing walls, where the design wind speed is 105mph or less and the flat roof snow load is 60psf or less, studs may be spaced and graded as follows:
     - 3.8.1. For 2x4 walls (only supporting one floor and roof, or two interior floors, or less):
       - Stud height < 9'-1" - 2x4 @ 16" O.C.
       - Stud height < 10'-1" - 2x4 (#2 grade) @ 16" O.C.
       - Stud height < 12'-1" - 2x4 (#2 grade) @ 12" O.C.
     - 3.8.2. For 2x6 walls:
       - Stud height < 14'-1" - 2x6 @ 16" O.C.
     - 3.8.3. See structural for taller studs or for approved wider spacings.
   - 3.9. Where the design wind speed is greater than 105mph or the flat roof snow load is greater than 60psf, bearing walls shall be framed with DF #2 studs @ 16" O.C., unless noted otherwise on the plans.

EARTHWORK

1. Geotechnical investigations shall conform to 2021 IBC 1803. Excavation, grading and fill shall conform to 2021 IBC 1804. Footings and foundations shall be constructed in accordance with 2021 IBC 1807 through 1810.
2. Excavations for any purpose shall not remove lateral support from any footing or foundation without first underpinning or protecting the footing or foundation against settlement or lateral translation (2021 IBC 1804.1).
3. Excavation outside the foundation shall be backfilled with soil that is free of organic material, construction debris, cobbles and boulders or with a controlled low-strength material (CLSM). The backfill shall be placed in lifts and compacted, in a manner that does not damage the foundation or the waterproofing or dampproofing material (2021 IBC 1804.3).
4. Footings and foundations shall be built on undisturbed soil, compacted fill material or CLSM. Slabs on grade shall be constructed over 4” of free-draining base placed over undisturbed soil or compacted structural fill.
5. Backfill shall not be placed against a foundation wall until the wall has sufficient strength and is anchored to the floor above, or is sufficiently braced to prevent damage by the backfill, except bracing is not required for walls supporting less than 4 feet of unbalanced backfill.

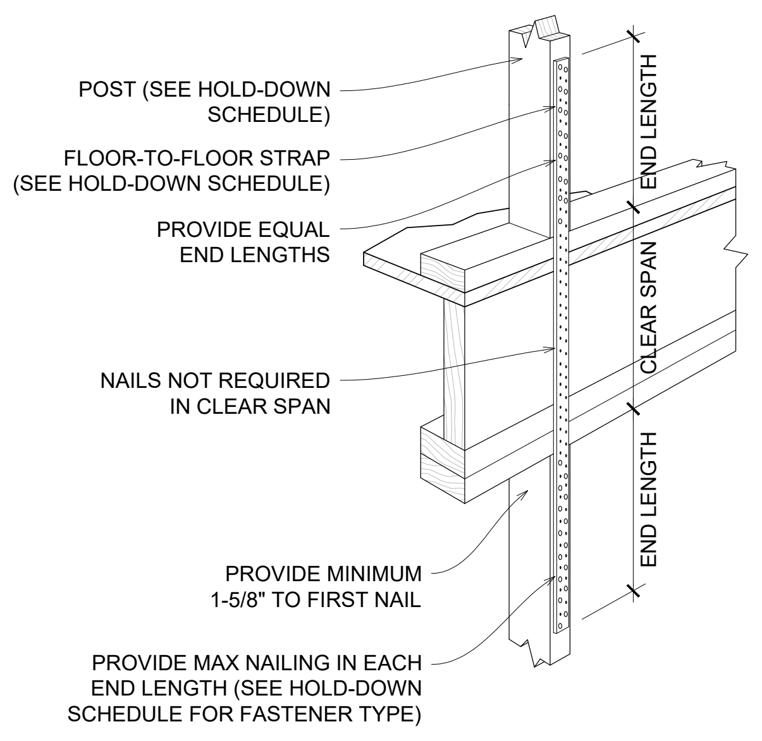
POST (SEE HOLD-DOWN SCHEDULE)
FLOOR-TO-FLOOR STRAP (SEE HOLD-DOWN SCHEDULE)
PROVIDE EQUAL END LENGTHS
NAILS NOT REQUIRED IN CLEAR SPAN
PROVIDE MINIMUM 1-5/8" TO FIRST NAIL
PROVIDE MAX NAILING IN EACH END LENGTH (SEE HOLD-DOWN SCHEDULE FOR FASTENER TYPE)
END LENGTH
CLEAR SPAN
END LENGTH

H HOLD-DOWN - FLOOR STRAP
NO SCALE

ADDITIONAL STRAPPING & BLOCKING AROUND OPENINGS ARE NOT REQUIRED

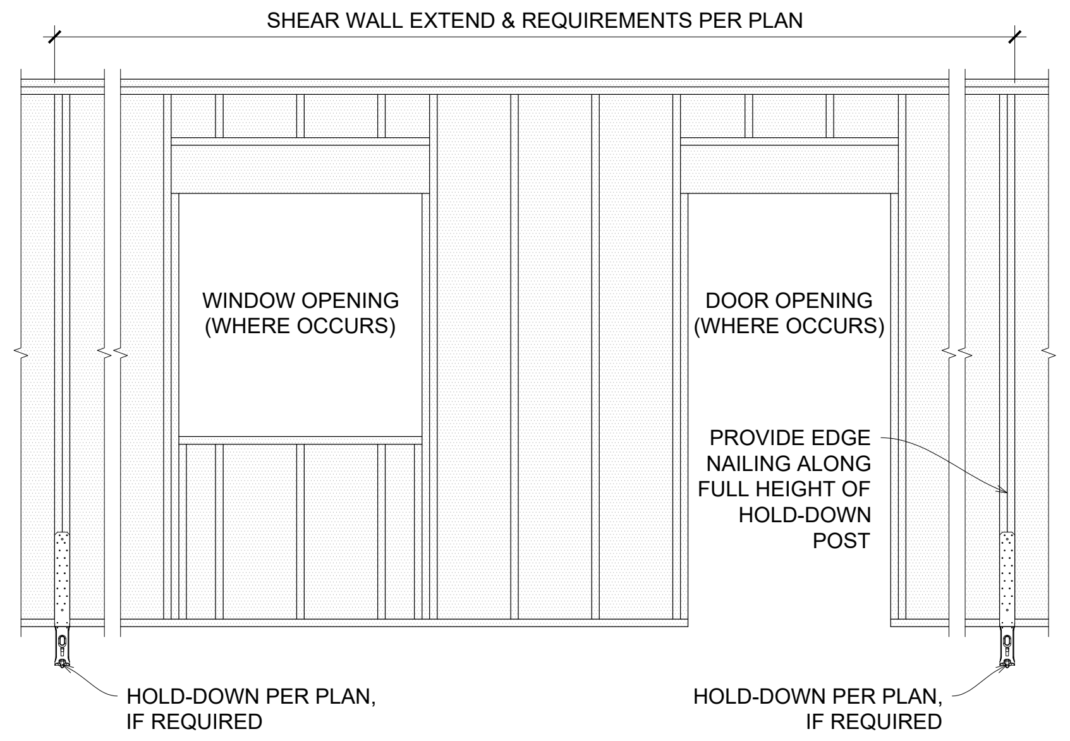
SHEAR WALL EXTEND & REQUIREMENTS PER PLAN
WINDOW OPENING (WHERE OCCURS)
DOOR OPENING (WHERE OCCURS)
PROVIDE EDGE NAILING ALONG FULL HEIGHT OF HOLD-DOWN POST
HOLD-DOWN PER PLAN, IF REQUIRED
HOLD-DOWN PER PLAN, IF REQUIRED

Y SHEAR WALL - PERFORATED
NO SCALE

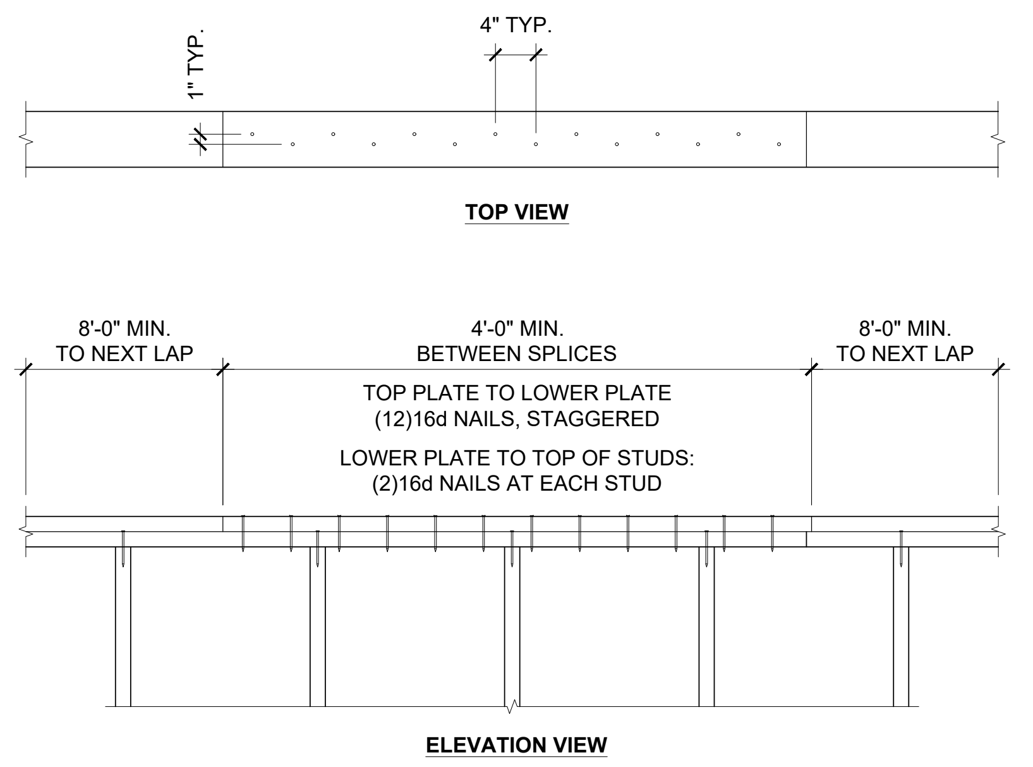
4" TYP.
1" TYP.
TOP VIEW
8'-0" MIN. TO NEXT LAP
4'-0" MIN. BETWEEN SPLICES
8'-0" MIN. TO NEXT LAP
TOP PLATE TO LOWER PLATE (12)16d NAILS, STAGGERED
LOWER PLATE TO TOP OF STUDS: (2)16d NAILS AT EACH STUD
ELEVATION VIEW

NOTE: WHERE DOUBLE TOP PLATE IS CUT DUE TO INTERSECTION BEAMS, WALLS, ETC. PROVIDE (2) CS16 STRAPS ACROSS CUT WITH 12" END LENGTHS

AP DIAPHRAGM - TOP PLATE SPLICE
NO SCALE

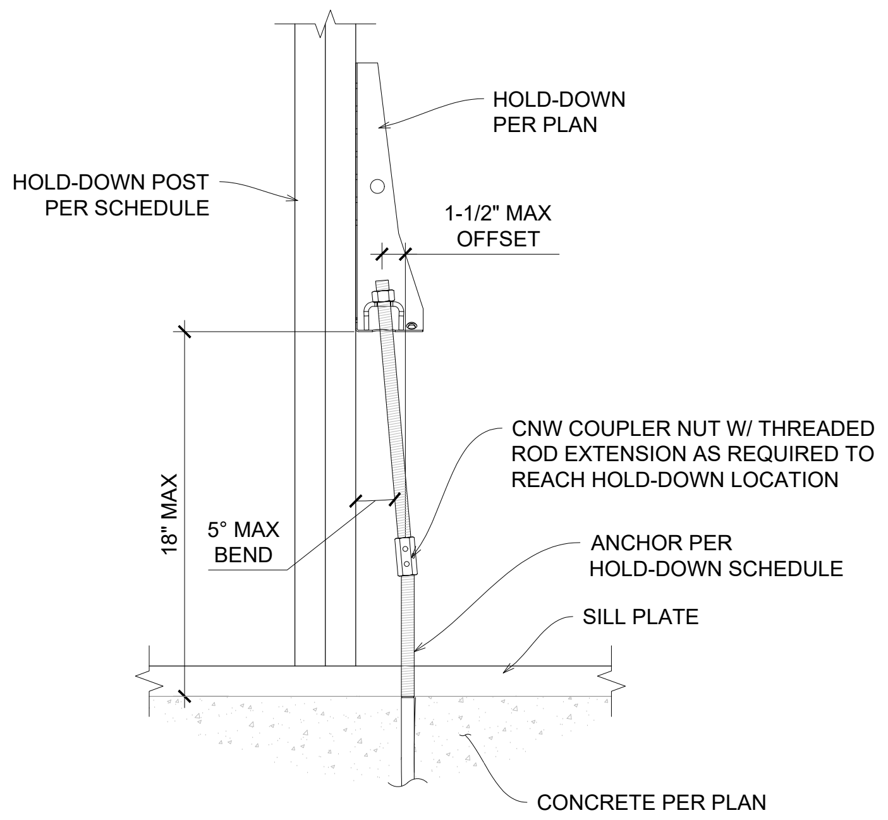
HOLD-DOWN PER PLAN
HOLD-DOWN POST PER SCHEDULE
1-1/2" MAX OFFSET
18" MAX
5° MAX BEND
CNW COUPLER NUT W/ THREADED ROD EXTENSION AS REQUIRED TO REACH HOLD-DOWN LOCATION
ANCHOR PER HOLD-DOWN SCHEDULE
SILL PLATE
CONCRETE PER PLAN

BC PRE-DEFLECTED HOLD-DOWN ON CONCRETE
NO SCALE

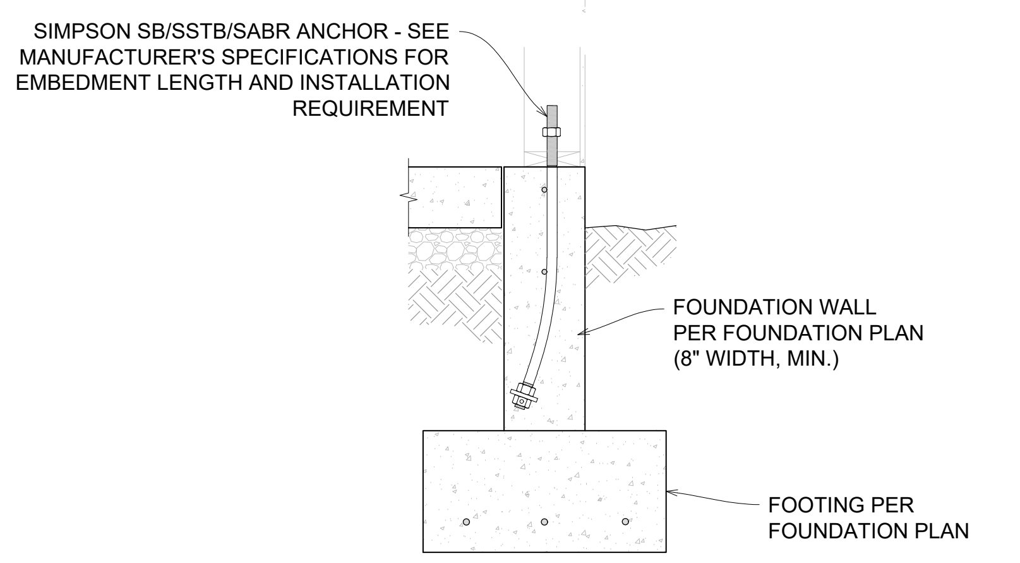
SIMPSON SB/SSTB/SABR ANCHOR - SEE MANUFACTURER'S SPECIFICATIONS FOR EMBEDMENT LENGTH AND INSTALLATION REQUIREMENT
FOUNDATION WALL PER FOUNDATION PLAN (8" WIDTH, MIN.)
FOOTING PER FOUNDATION PLAN

BE SB/SSTB/SABR ANCHOR AT FOUNDATION WALL
NO SCALE

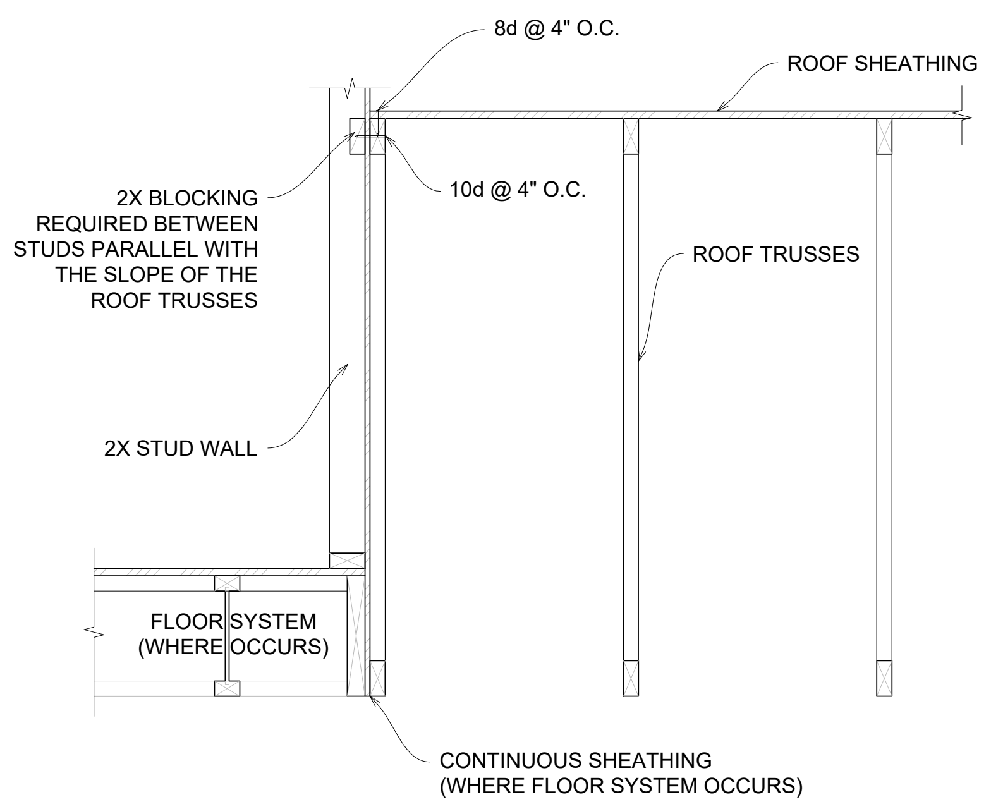
8d @ 4" O.C.
ROOF SHEATHING
2X BLOCKING REQUIRED BETWEEN STUDS PARALLEL WITH THE SLOPE OF THE ROOF TRUSSES
10d @ 4" O.C.
ROOF TRUSSES
2X STUD WALL
FLOOR SYSTEM (WHERE OCCURS)
CONTINUOUS SHEATHING (WHERE FLOOR SYSTEM OCCURS)

CT SHEAR WALL - DIAPHRAGM TRANSFER (TRUSS PARALLEL)
NO SCALE

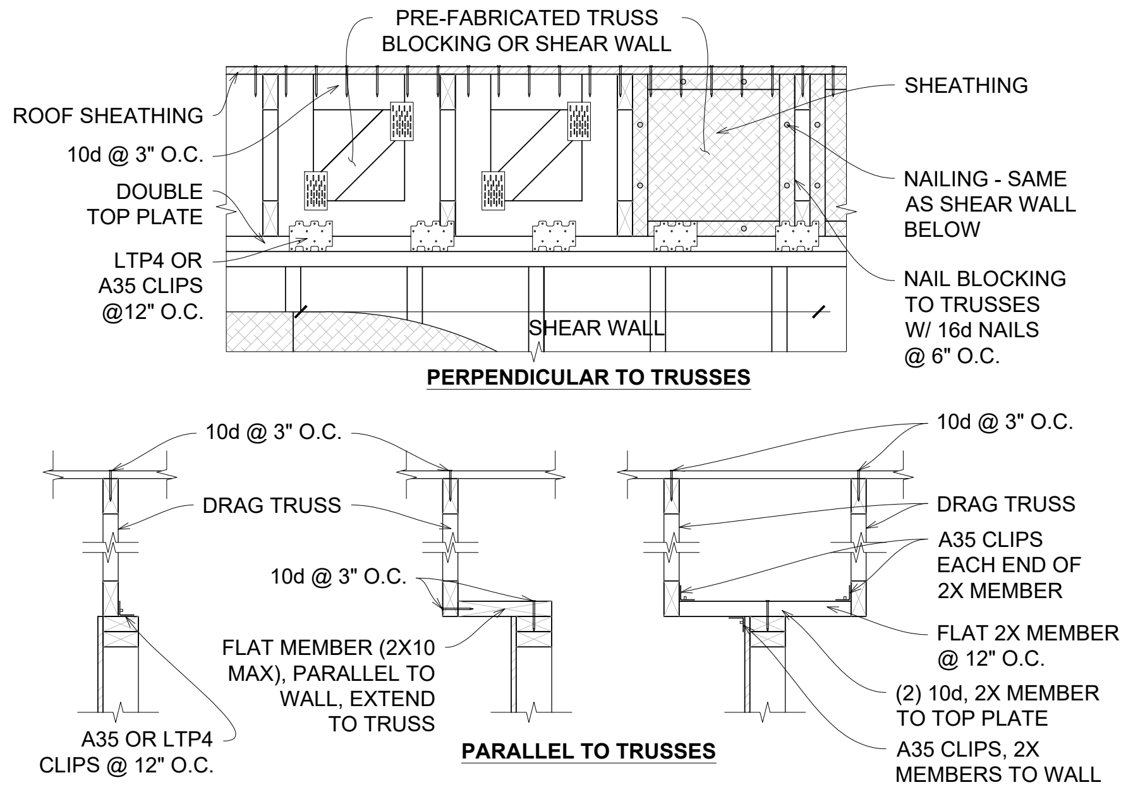
PRE-FABRICATED TRUSS BLOCKING OR SHEAR WALL
ROOF SHEATHING
10d @ 3" O.C.
DOUBLE TOP PLATE
LTP4 OR A35 CLIPS @12" O.C.
SHEAR WALL
SHEATHING
NAILING - SAME AS SHEAR WALL BELOW
NAIL BLOCKING TO TRUSSES W/ 16d NAILS @ 6" O.C.
PERPENDICULAR TO TRUSSES
10d @ 3" O.C.
DRAG TRUSS
10d @ 3" O.C.
FLAT MEMBER (2X10 MAX), PARALLEL TO WALL, EXTEND TO TRUSS
A35 OR LTP4 CLIPS @ 12" O.C.
PARALLEL TO TRUSSES
10d @ 3" O.C.
DRAG TRUSS
A35 CLIPS EACH END OF 2X MEMBER
FLAT 2X MEMBER @ 12" O.C.
(2) 10d, 2X MEMBER TO TOP PLATE
A35 CLIPS, 2X MEMBERS TO WALL

ADDITIONAL OPTION FOR PARALLEL CASE: FRAMED WALL WITH SHEATHING AND NAILING SAME AS SHEAR WALL ALIGNED BELOW

EM SHEAR WALL - DIAPHRAGM CONNECTION (ROOF TRUSSES)
NO SCALE

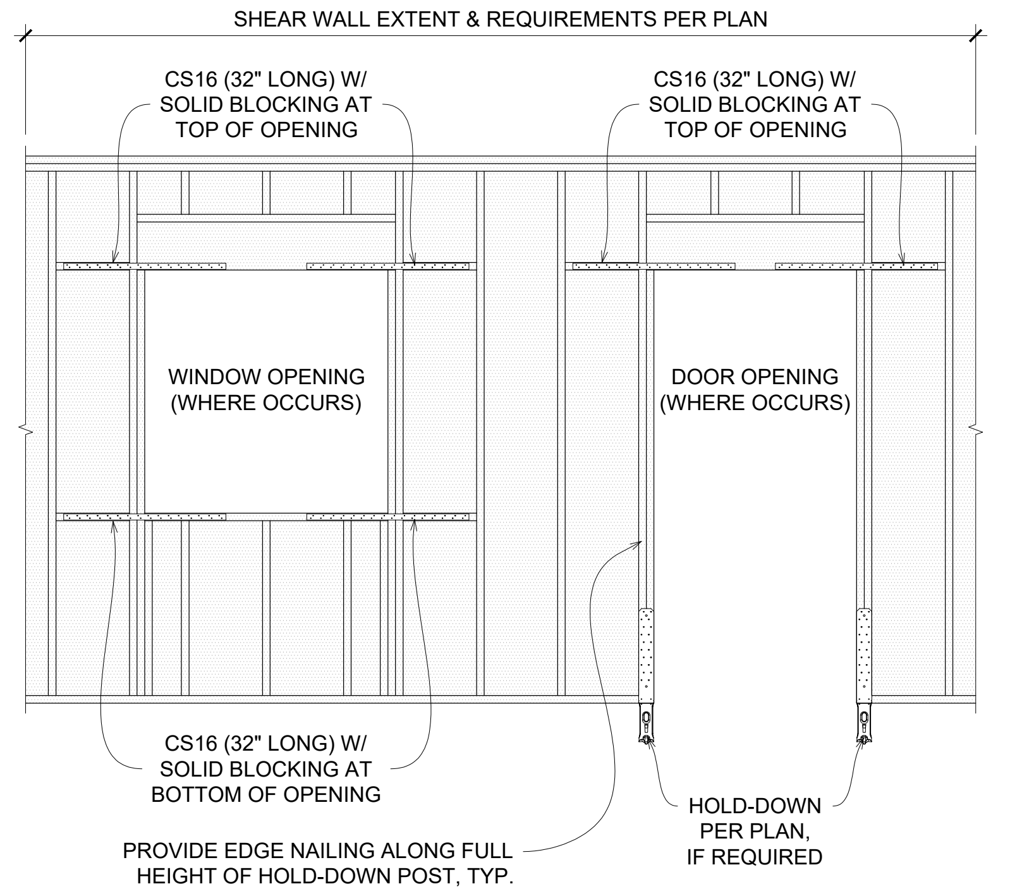
SHEAR WALL EXTENT & REQUIREMENTS PER PLAN
CS16 (32" LONG) W/ SOLID BLOCKING AT TOP OF OPENING
CS16 (32" LONG) W/ SOLID BLOCKING AT TOP OF OPENING
WINDOW OPENING (WHERE OCCURS)
DOOR OPENING (WHERE OCCURS)
CS16 (32" LONG) W/ SOLID BLOCKING AT BOTTOM OF OPENING
PROVIDE EDGE NAILING ALONG FULL HEIGHT OF HOLD-DOWN POST, TYP.
HOLD-DOWN PER PLAN, IF REQUIRED

FH SHEAR WALL - FORCE TRANSFER AROUND OPENINGS
NO SCALE

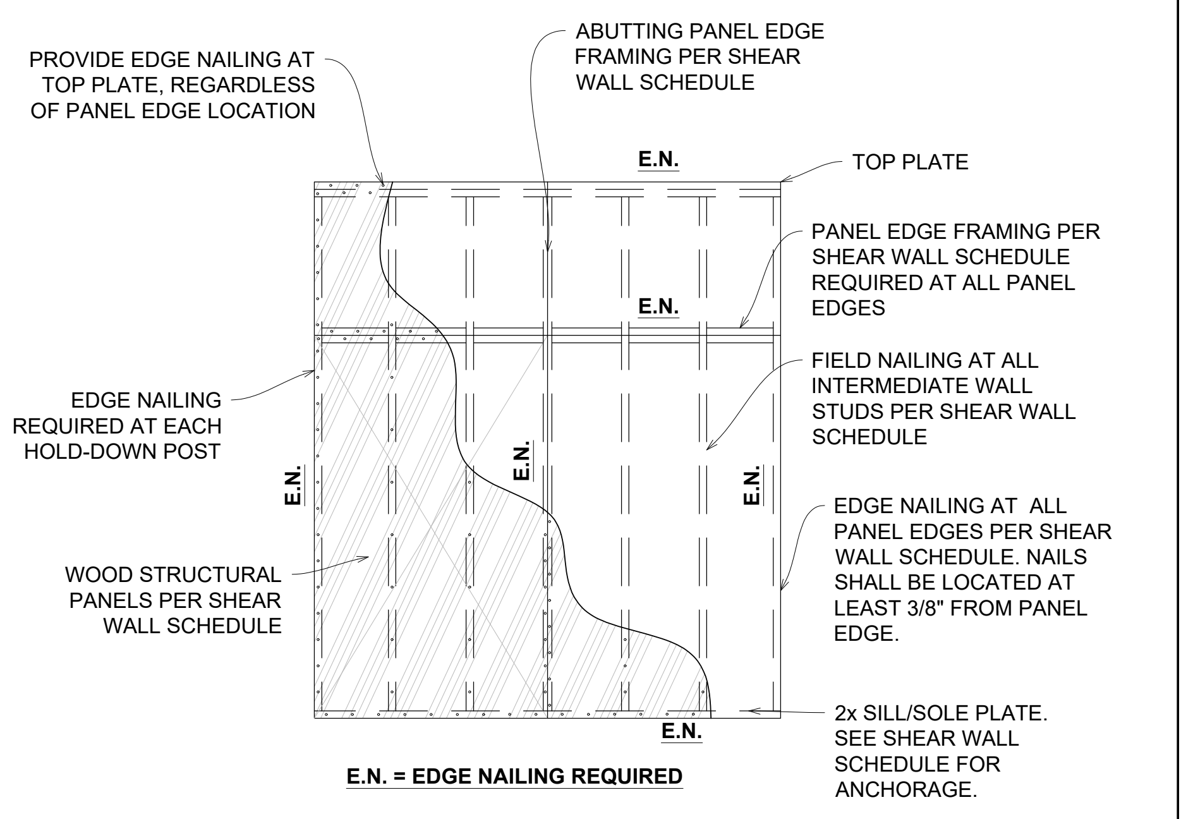
PROVIDE EDGE NAILING AT TOP PLATE, REGARDLESS OF PANEL EDGE LOCATION
ABUTTING PANEL EDGE FRAMING PER SHEAR WALL SCHEDULE
E.N.
TOP PLATE
E.N.
PANEL EDGE FRAMING PER SHEAR WALL SCHEDULE REQUIRED AT ALL PANEL EDGES
FIELD NAILING AT ALL INTERMEDIATE WALL STUDS PER SHEAR WALL SCHEDULE
EDGE NAILING REQUIRED AT EACH HOLD-DOWN POST
E.N.
E.N.
E.N.
WOOD STRUCTURAL PANELS PER SHEAR WALL SCHEDULE
EDGE NAILING AT ALL PANEL EDGES PER SHEAR WALL SCHEDULE. NAILS SHALL BE LOCATED AT LEAST 3/8" FROM PANEL EDGE.
E.N.
2x SILL/SOLE PLATE. SEE SHEAR WALL SCHEDULE FOR ANCHORAGE.
E.N. = EDGE NAILING REQUIRED

GT WOOD STRUCTURAL PANEL SHEAR WALL
NO SCALE

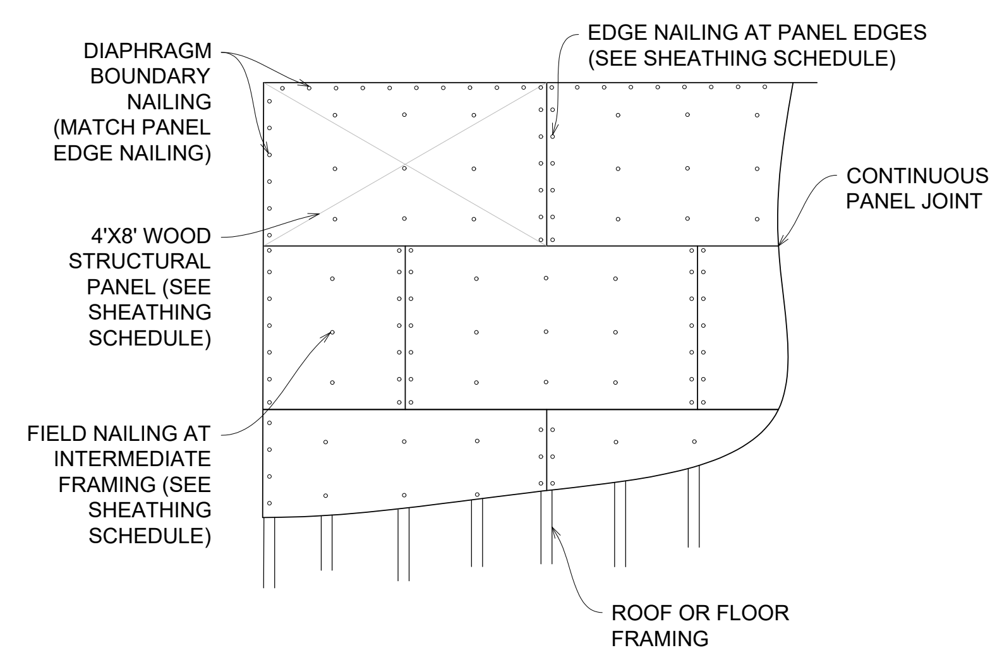
DIAPHRAGM BOUNDARY NAILING (MATCH PANEL EDGE NAILING)
EDGE NAILING AT PANEL EDGES (SEE SHEATHING SCHEDULE)
CONTINUOUS PANEL JOINT
4'X8' WOOD STRUCTURAL PANEL (SEE SHEATHING SCHEDULE)
FIELD NAILING AT INTERMEDIATE FRAMING (SEE SHEATHING SCHEDULE)
ROOF OR FLOOR FRAMING

GU WOOD STRUCTURAL PANEL DIAPHRAGM - UNBLOCKED
NO SCALE

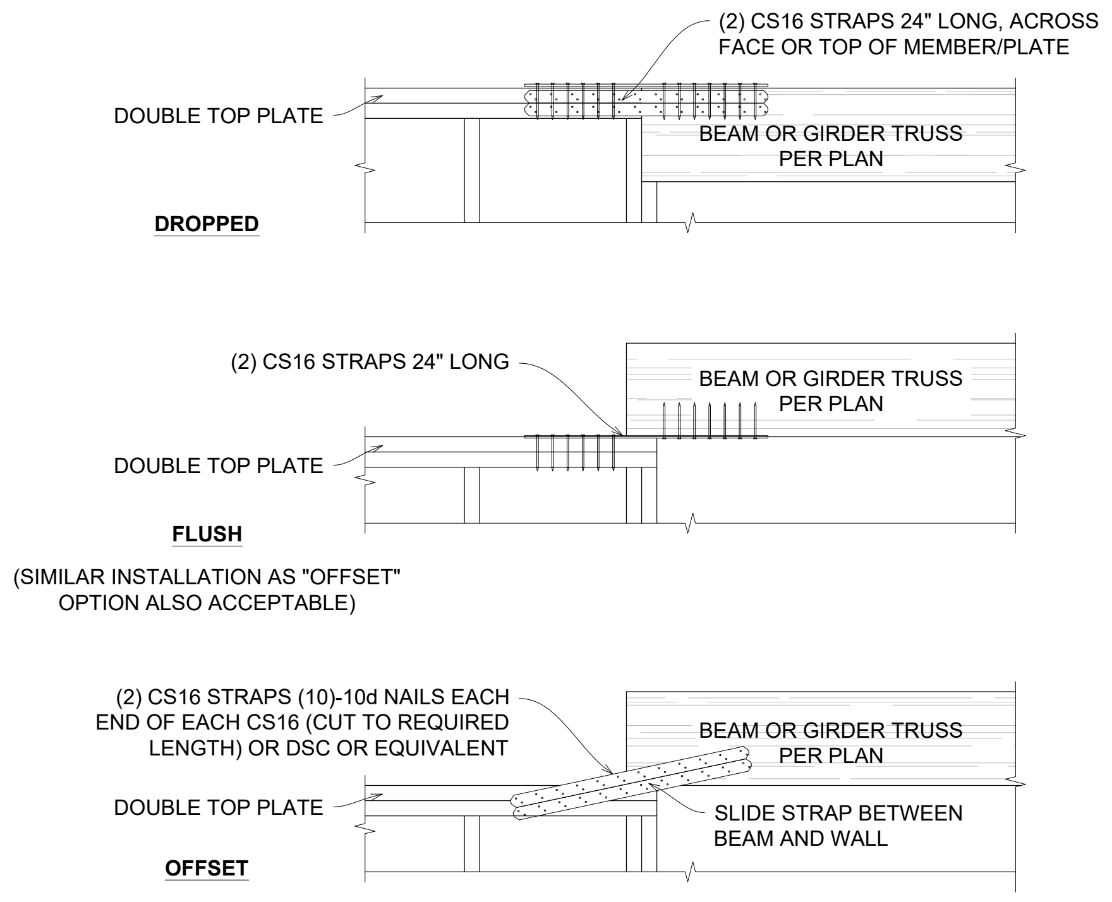
(2) CS16 STRAPS 24" LONG, ACROSS FACE OR TOP OF MEMBER/PLATE
DOUBLE TOP PLATE
BEAM OR GIRDER TRUSS PER PLAN
DROPPED
(2) CS16 STRAPS 24" LONG
BEAM OR GIRDER TRUSS PER PLAN
DOUBLE TOP PLATE
FLUSH
(SIMILAR INSTALLATION AS "OFFSET" OPTION ALSO ACCEPTABLE)
(2) CS16 STRAPS (10)-10d NAILS EACH END OF EACH CS16 (CUT TO REQUIRED LENGTH) OR DSC OR EQUIVALENT
BEAM OR GIRDER TRUSS PER PLAN
DOUBLE TOP PLATE
SLIDE STRAP BETWEEN BEAM AND WALL
OFFSET

LF DIAPHRAGM - CHORD / COLLECTOR STRAP
NO SCALE

SW1	LS50 @ 24" O.C.
SW2	LS50 @ 16" O.C.
SW3	LS50 @ 12" O.C.
SW4	LS50 @ 8" O.C.

(FOR SW5-SW8, SEE PLANS FOR TOP PLATE CONNECTION)

MULTI-PLY TRUSS TO TOP PLATE CONNECTION	
TRUSS UPLIFT	TIE-DOWN
<520 LB	(2) H2.5A
<650 LB	SDWC15600 SCREW
<1040 LB	H10A OR H10A-2
<1310 LB	HTS16
<1980 LB	(2) MTS12
<2830 LB	(2) HTS16
UPLIFT VALUES TO BE PROVIDED BY TRUSS MANUFACTURER	
UPLIFT CAPACITIES ARE BASED ON DOUGLAS FIR	

⦶ = DIAPHRAGM EDGE NAILING SEE FRAMING NOTES
⊖ = SHEAR WALL EDGE NAILING SEE SHEAR WALL PLAN

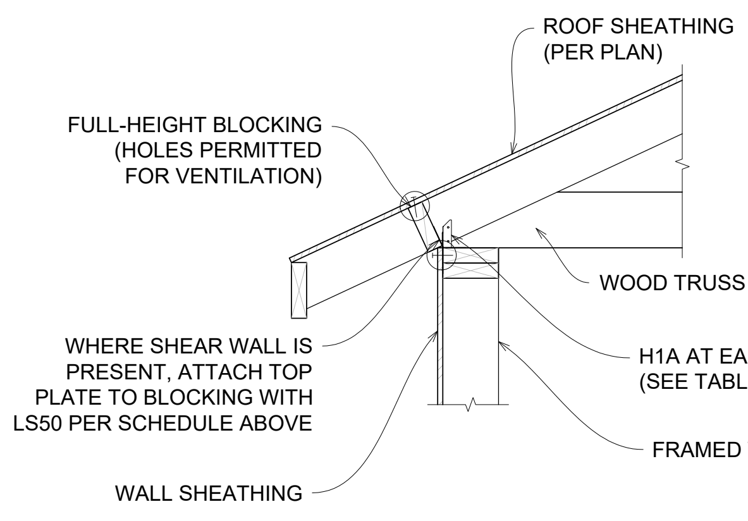
ROOF SHEATHING (PER PLAN)
FULL-HEIGHT BLOCKING (HOLES PERMITTED FOR VENTILATION)
WOOD TRUSS
WHERE SHEAR WALL IS PRESENT, ATTACH TOP PLATE TO BLOCKING WITH LS50 PER SCHEDULE ABOVE
H1A AT EACH SINGLE TRUSS BEARING (SEE TABLE FOR MULTI-PLY TRUSSES)
FRAMED WALL
WALL SHEATHING

ZB ROOF FRAMING - BLOCKING (STANDARD HEEL)
NO SCALE

ACUTE ENGINEERING INC.

Phone: 801.229.9020
Email: info@acuteeng.com

THESE STRUCTURAL DRAWINGS ARE BASED ON ARCHITECTURAL DRAWINGS. SEE CURRENT ISSUE OR REVISION DATE.

DIMENSIONS AND ELEVATIONS ARE SUPPLIED BY THE ARCHITECT. THEY MAY BE PROVIDED ON THE STRUCTURAL PLANS AND DETAILS FOR THE CONVENIENCE OF THE CONTRACTOR. VERIFY DIMENSIONS AND ELEVATIONS WITH ARCHITECTURAL DRAWINGS.

PROJECT #
5970126
DATE:
26 JAN 2026

BUILDERS DESIGN SENTAUR SE EVERGREEN ST
(MILWAUKIE)

GENERAL STRUCTURAL NOTES

REVISIONS

-	-	-
-	-	-
-	-	-
-	-	-
-	-	-
-	-	-

92835PE
BRANDON TODD DECKER
NOV. 14, 2017
01/26/2026
RENEWS: 12/31/2027

SN1

SW1	LTP4 @ 24" O.C.
SW2	LTP4 @ 16" O.C.
SW3	LTP4 @ 12" O.C.
SW4	LTP4 @ 8" O.C.

*CLIPS NOT REQUIRED IF SHEAR WALL SHEATHING IS CONTINUOUS OVER TRUSS/TOP PLATE

(FOR SW5-SW8, SEE PLANS FOR TOP PLATE CONNECTION)

Ⓣ = DIAPHRAGM EDGE NAILING SEE FRAMING NOTES

⊖ = SHEAR WALL EDGE NAILING SEE SHEAR WALL PLAN

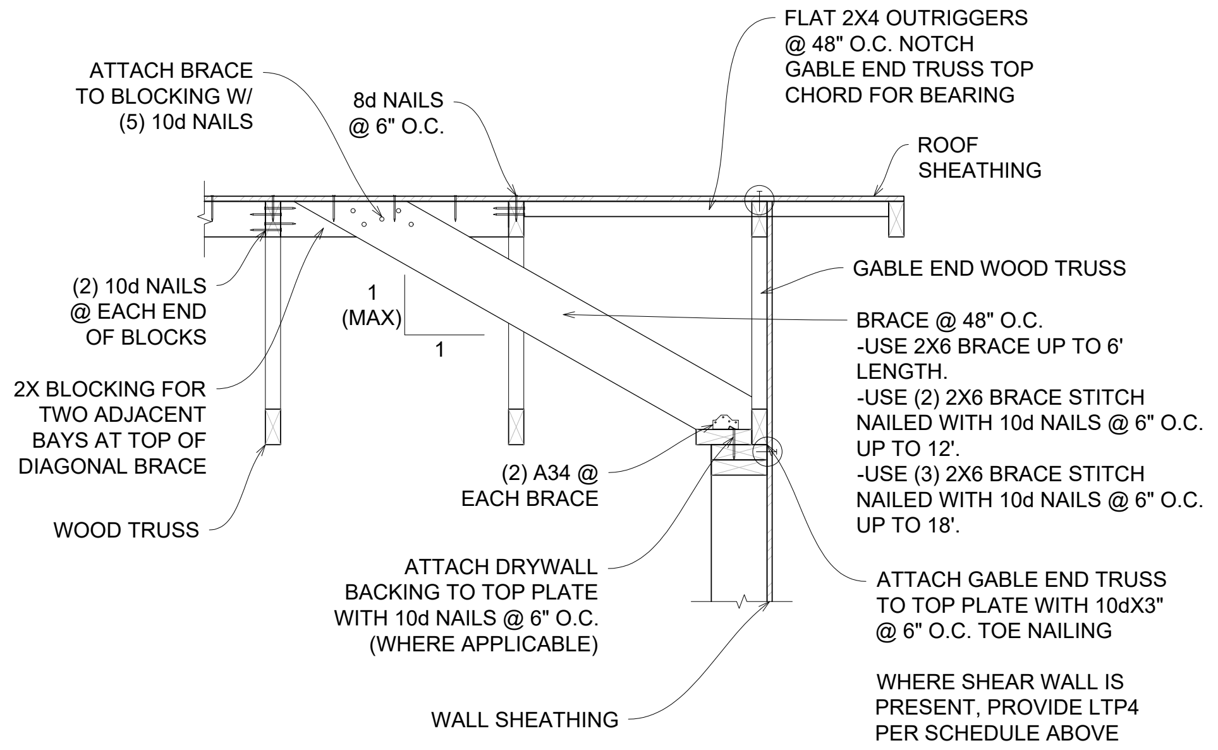
ATTACH BRACE TO BLOCKING W/ (5) 10d NAILS
8d NAILS @ 6" O.C.
FLAT 2X4 OUTRIGGERS @ 48" O.C. NOTCH GABLE END TRUSS TOP CHORD FOR BEARING
ROOF SHEATHING
(2) 10d NAILS @ EACH END OF BLOCKS
1 (MAX)
1
GABLE END WOOD TRUSS
BRACE @ 48" O.C.
-USE 2X6 BRACE UP TO 6' LENGTH.
-USE (2) 2X6 BRACE STITCH NAILED WITH 10d NAILS @ 6" O.C. UP TO 12'.
-USE (3) 2X6 BRACE STITCH NAILED WITH 10d NAILS @ 6" O.C. UP TO 18'.
2X BLOCKING FOR TWO ADJACENT BAYS AT TOP OF DIAGONAL BRACE
(2) A34 @ EACH BRACE
WOOD TRUSS
ATTACH DRYWALL BACKING TO TOP PLATE WITH 10d NAILS @ 6" O.C. (WHERE APPLICABLE)
ATTACH GABLE END TRUSS TO TOP PLATE WITH 10dX3" @ 6" O.C. TOE NAILING
WALL SHEATHING

WHERE SHEAR WALL IS PRESENT, PROVIDE LTP4 PER SCHEDULE ABOVE (SHEATHE THE TRUSS TO MATCH SHEAR WALL BELOW)

ZC ROOF TRUSS - WOOD WALL GABLE END BRACING

NO SCALE

SW1	A35 @ 24" O.C.
SW2	A35 @ 16" O.C.
SW3	A35 @ 12" O.C.
SW4	A35 @ 8" O.C.
SW5	A35 @ 16" O.C. & LTP4* @ 16" O.C. (STAGGERED)
SW6	
SW7	A35 @ 8" O.C. & LTP4* @ 8" O.C. (STAGGERED)
SW8	

*STARRED CLIPS NOT REQUIRED IF EXTERIOR SHEATHING IS CONTINUOUS OVER RIM BOARD/TOP PLATE

Ⓣ = DIAPHRAGM EDGE NAILING SEE FRAMING NOTES

⊖ = SHEAR WALL EDGE NAILING SEE SHEAR WALL PLAN

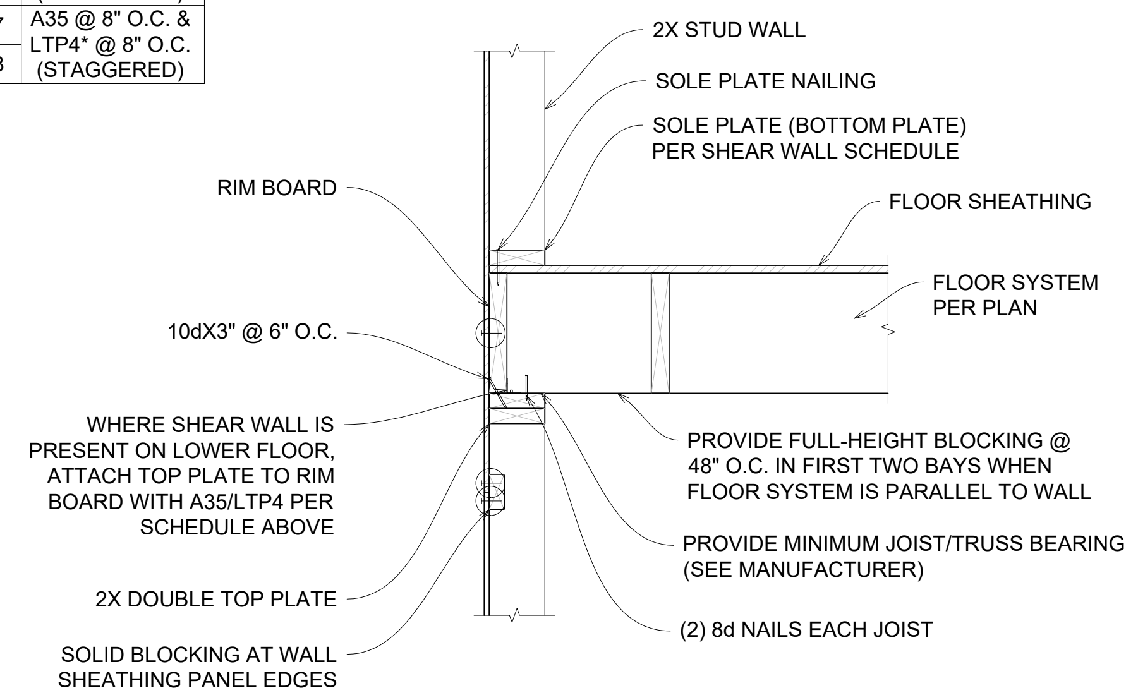
2X STUD WALL
SOLE PLATE NAILING
SOLE PLATE (BOTTOM PLATE) PER SHEAR WALL SCHEDULE
RIM BOARD
FLOOR SHEATHING
FLOOR SYSTEM PER PLAN
10dX3" @ 6" O.C.
WHERE SHEAR WALL IS PRESENT ON LOWER FLOOR, ATTACH TOP PLATE TO RIM BOARD WITH A35/LTP4 PER SCHEDULE ABOVE
PROVIDE FULL-HEIGHT BLOCKING @ 48" O.C. IN FIRST TWO BAYS WHEN FLOOR SYSTEM IS PARALLEL TO WALL
PROVIDE MINIMUM JOIST/TRUSS BEARING (SEE MANUFACTURER)
2X DOUBLE TOP PLATE
(2) 8d NAILS EACH JOIST
SOLID BLOCKING AT WALL SHEATHING PANEL EDGES

ZD BEARING WALL - EXTERIOR TO FLOOR

NO SCALE

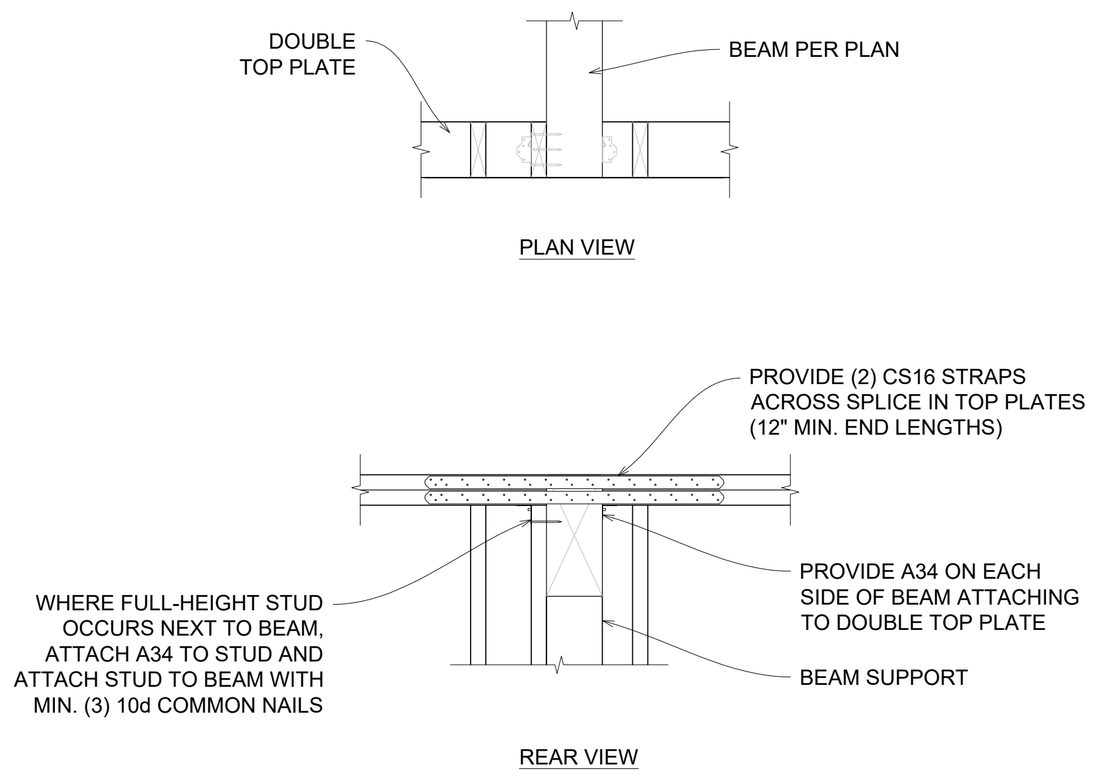
DOUBLE TOP PLATE
BEAM PER PLAN
PLAN VIEW
PROVIDE (2) CS16 STRAPS ACROSS SPLICE IN TOP PLATES (12" MIN. END LENGTHS)
WHERE FULL-HEIGHT STUD OCCURS NEXT TO BEAM, ATTACH A34 TO STUD AND ATTACH STUD TO BEAM WITH MIN. (3) 10d COMMON NAILS
PROVIDE A34 ON EACH SIDE OF BEAM ATTACHING TO DOUBLE TOP PLATE
BEAM SUPPORT
REAR VIEW

ZJ BEAM TENSION ATTACHMENT (PERPENDICULAR WALL)

NO SCALE

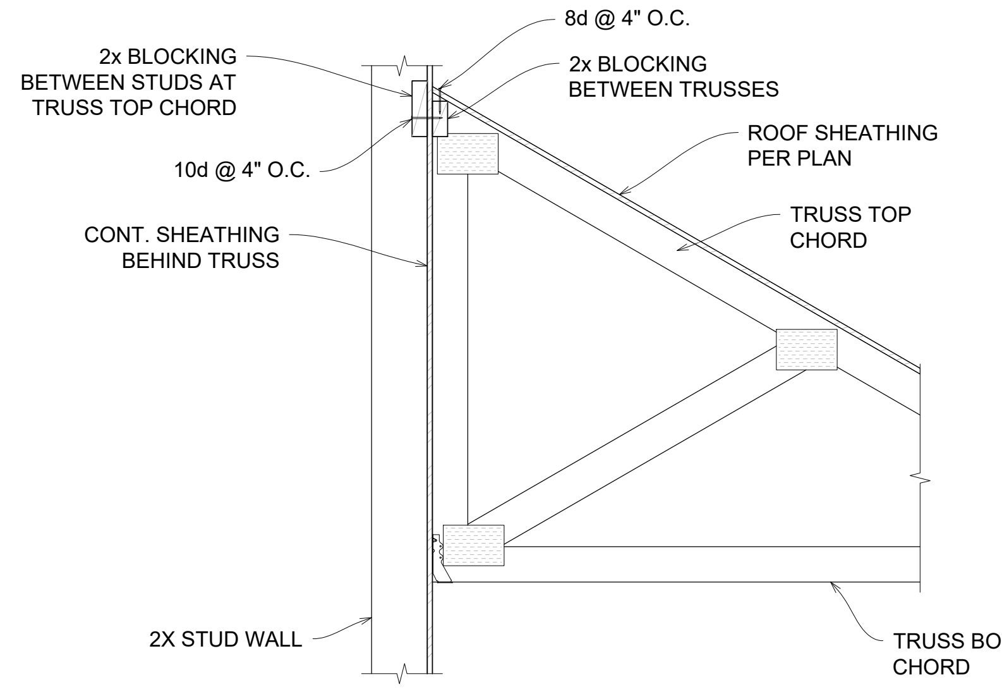
2x BLOCKING BETWEEN STUDS AT TRUSS TOP CHORD
8d @ 4" O.C.
2x BLOCKING BETWEEN TRUSSES
ROOF SHEATHING PER PLAN
10d @ 4" O.C.
CONT. SHEATHING BEHIND TRUSS
TRUSS TOP CHORD
2X STUD WALL
TRUSS BOTTOM CHORD

ZQ SHEAR WALL - DIAPHRAGM TRANSFER (TRUSS PERPENDICULAR)

NO SCALE

SHEAR WALL SCHEDULE

MARK	PANEL THICKNESS	PANEL EDGE NAILING	PANEL FIELD NAILING	STUDS AT ADJOINING PANEL EDGES	ANCHORAGE	
					SOLE PLATE	SILL PLATE
SW1	7/16"	8d @ 6"	8d @ 12"	2X	16d @ 4"	1/2" A.B. @ 32"
SW2	7/16"	8d @ 4"	8d @ 12"	2X	16d @ 12"	1/2" A.B. @ 32"

1. SHEATHING SHALL CONSIST OF WOOD STRUCTURAL PANELS (SEE GENERAL STRUCTURAL NOTES)

2. UNLESS NOTED ON DRAWINGS, SHEAR WALL STUDS SHALL BE SPACED AT 16" O.C.

3. SHEATHING NAILS SHALL BE COMMON (0.131" x 2-1/2") OR GALVANIZED BOX NAILS (0.113" x 2-1/2")

4. ANCHORAGE NAILS SHALL BE COMMON NAILS

5. WHERE PANELS ARE APPLIED ON BOTH FACES OF A SHEAR WALL AND NAIL SPACING IS LESS THAN 6" O.C. ON EITHER SIDE, PANEL JOINTS SHALL BE OFFSET TO FALL ON DIFFERENT FRAMING MEMBERS.

6. ANCHOR BOLTS SHALL HAVE A 3"x3"x0.229" PLATE WASHER AND 7" MIN. EMBEDMENT. THE WASHER SHALL EXTEND TO WITHIN 1/2" FROM THE SHEATHING.

7. FOR SW3, SW4, SW7, AND SW8, (2) 2x STUDS STITCH-NAILED TOGETHER w/ (2) 10d NAILS @ 6" O.C. MAY BE USED AT ADJOINING PANEL EDGES IN PLACE OF 3x FRAMING

8. ANCHOR BOLTS MAY BE SUBSTITUTED WITH TITEN HD OF SAME DIAMETER AND SPACING. PROVIDE MIN. 4-1/4" EMBEDMENT FOR 1/2" DIA. BOLTS AND MIN. 4-3/4" EMBEDMENT FOR 5/8" DIA. BOLTS.

9. FOR SW1 ONLY, EDGE NAILS MAY BE SUBSTITUTED WITH 1-1/2" 16-GAUGE STAPLES SPACED AT 3" O.C., AND FIELD NAILS MAY BE SUBSTITUTED WITH 16-GAUGE STAPLES AT 12" O.C.

HOLD-DOWN SCHEDULE

MARK	HOLD-DOWN	STUD ATTACHMENT	ANCHOR	ANCHOR NOTES	MIN. HOLD-DOWN POST
D	CS16	(20) 10d x 2-1/2"	STRAP	11" END LENGTHS	(2) 2x POST
J1	HDU2-SDS2.5	(6) SDS 1/4" x 2-1/2"	SSTB16	-	(2) 2x POST

1. ALL HOLD-DOWNS AND ANCHORS SHALL BE SIMPSON STRONG-TIE (OR EQUIVALENT)

2. INSTALLATION OF ALL HOLD-DOWNS, ANCHORS AND STRAPS SHALL BE PER THE MANUFACTURER'S RECOMMENDATIONS AND SPECIFICATIONS

3. PROVIDE EDGE NAILING ALONG STUDS CONNECTED TO HOLD-DOWN ANCHORS AND STRAPS

SHEATHING SCHEDULE

TYPE	THICKNESS
UPPER FLOOR	3/4" OSB (48/24 SPAN RATING)
ROOF	7/16" OSB (24/16 SPAN RATING)

1. SHEATHING PERPENDICULAR TO SUPPORTS

2. FLOOR SHEATHING NAILED & GLUED TO SUPPORTS

3. 8d @ 6" (EDGES) AND 8d @ 12" O.C. (FIELD)

ALL EXTERIOR WALLS SHALL BE 2X6 DF STUD @ 16" O.C. - U.N.O.

ALL HEADERS IN EXTERIOR WALLS SHALL HAVE MIN. (1) KING STUD AT EACH SUPPORT - U.N.O.

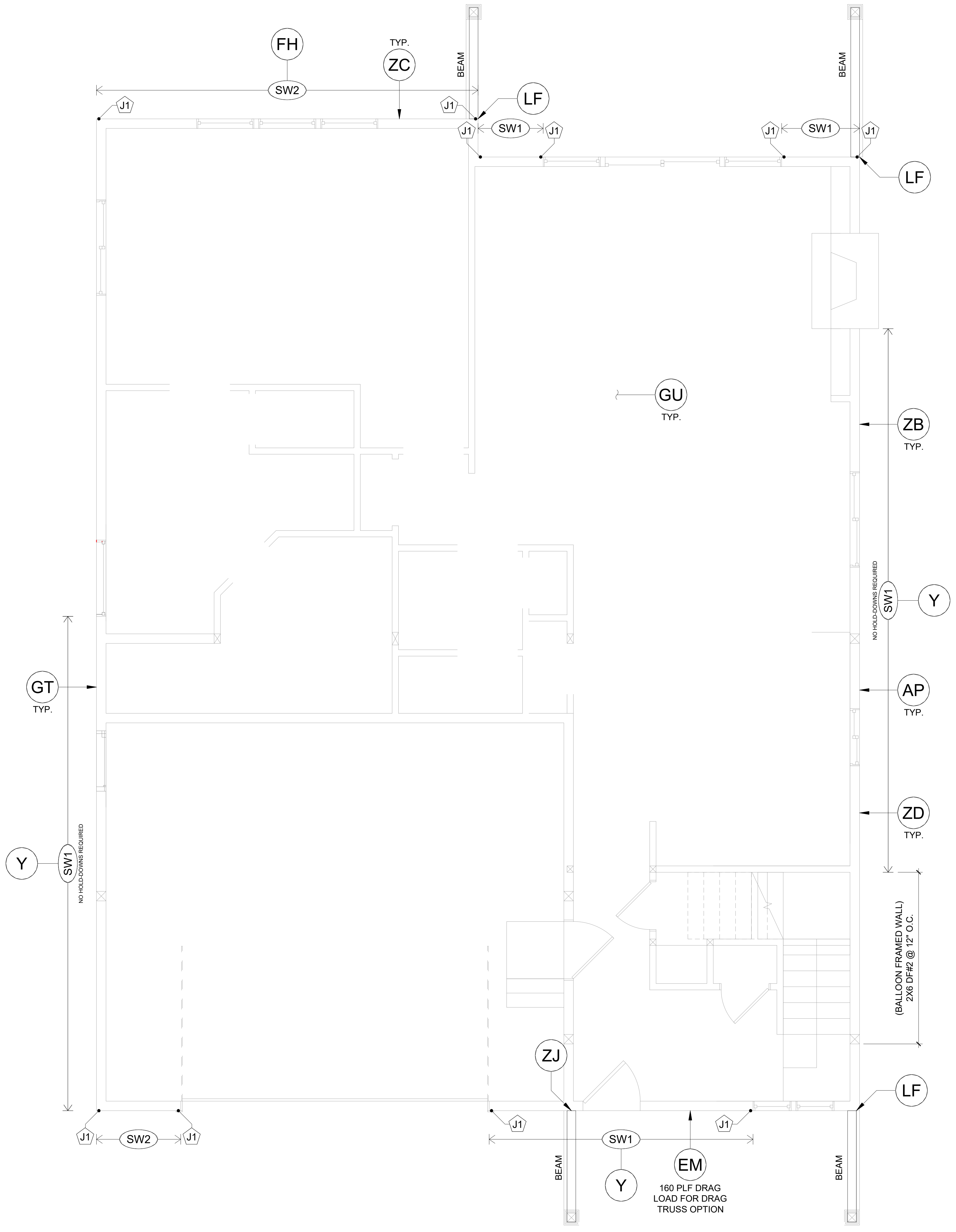
FH
TYP.
ZC
SW2
J1
J1
BEAM
LF
J1
SW1
J1
J1
SW1
J1
BEAM
LF
GU
TYP.
ZB
TYP.
NO HOLD-DOWNS REQUIRED
SW1
Y
GT
TYP.
AP
TYP.
Y
SW1
NO HOLD-DOWNS REQUIRED
ZD
TYP.
(BALLOON FRAMED WALL)
2X6 DF#2 @ 12" O.C.
ZJ
LF
J1
SW2
J1
J1
SW1
J1
BEAM
Y
EM
180 PLF DRAG LOAD FOR DRAG TRUSS OPTION
BEAM

1 MAIN FLOOR SHEAR WALL PLAN

SCALE: 1/4" = 1' - 0"

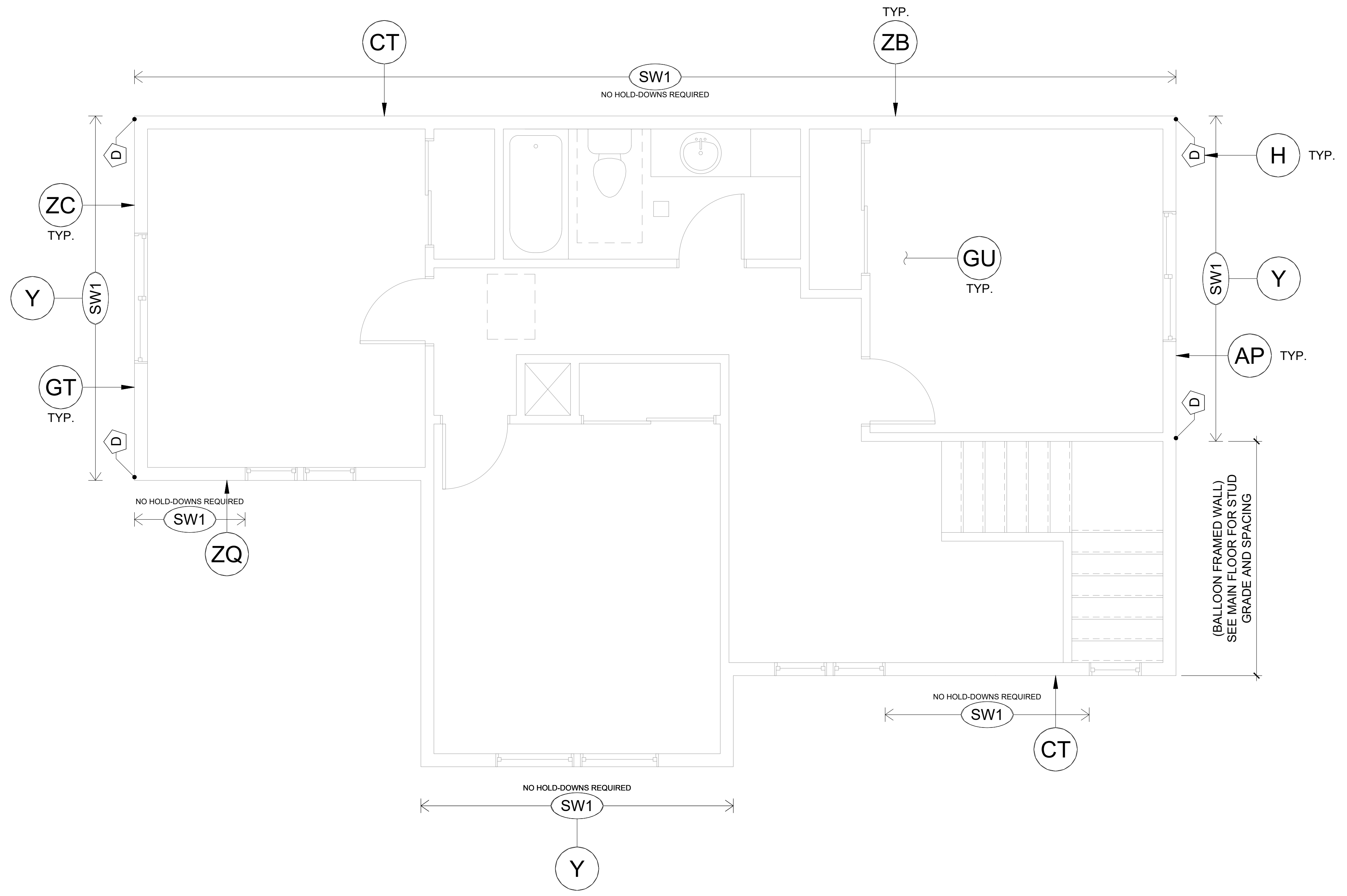
CT
TYP.
ZB
SW1
NO HOLD-DOWNS REQUIRED
D
ZC
TYP.
Y
SW1
GT
TYP.
D
D
H
TYP.
GU
TYP.
SW1
Y
AP
TYP.
D
NO HOLD-DOWNS REQUIRED
SW1
ZQ
(BALLOON FRAMED WALL)
SEE MAIN FLOOR FOR STUD GRADE AND SPACING
NO HOLD-DOWNS REQUIRED
SW1
CT
NO HOLD-DOWNS REQUIRED
SW1
Y

2 UPPER FLOOR SHEAR WALL PLAN

SCALE: 1/4" = 1' - 0"

ACUTE ENGINEERING INC.

Phone: 801.229.9020
Email: info@acuteeng.com

THESE STRUCTURAL DRAWINGS ARE BASED ON ARCHITECTURAL DRAWINGS. SEE CURRENT ISSUE OR REVISION DATE.

DIMENSIONS AND ELEVATIONS ARE SUPPLIED BY THE ARCHITECT. THEY MAY BE PROVIDED ON THE STRUCTURAL PLANS AND DETAILS FOR THE CONVENIENCE OF THE CONTRACTOR. VERIFY DIMENSIONS AND ELEVATIONS WITH ARCHITECTURAL DRAWINGS.

PROJECT #
5970126

DATE:
26 JAN 2026

BUILDERS DESIGN SENTAUR SE EVERGREEN ST
(MILWAUKIE)

MAIN FLOOR SHEAR WALL PLAN

REVISIONS

-	-	-
-	-	-
-	-	-
-	-	-
-	-	-
-	-	-

REGISTERED PROFESSIONAL ENGINEER
92835PE
B Deck
OREGON
NOV. 14, 2017
BRANDON TODD DECKER
01/26/2026
RENEWS: 12/31/2027

S1-0