Industrial Robots & VEX VRC Robots

3/25/2025 Steve Bolin
Bolinrobotics.com

www.fppt.info

What robots do when no one is watching…

https://youtu.be/fFwrakDrYTc?si=WLQ8Q7bdj_31T11J

www.fppt.info

Topics

- Introductions
- Industrial robot technology
  - Types of robots
  - Size ranges
  - Why so many choices?
- Industrial robot systems – real world applications
- Similarities between VEX and industrial robots
- Background/skill requirements for robotics & automation
- Hands-on time with an industrial robot

3

www.fppt.info

Introductions

Steve Bolin

- Bolin Robotics [Robotics & Automation Consulting]
- Previous: Robotics and Vision Sales & Application Engineer at Kinemetrix [Custom Automation Builder]
- Mentor for Covington Catholic VEX Robotics Teams (9257)

Matt Schroff

- District/Account Manager
- FANUC America Corp - Robotics Division

4

www.fppt.info

Industrial robot companies

- Fanuc
- Yaskawa Motoman
- ABB
- Kuka
- Kawasaki
- Epson
- Yamaha
- Denso
- Omron
- Mitsubishi
- Nachi
- And many more…

www.fppt.info

Many types and sizes of industrial robots

www.fppt.info

Industrial robot applications

- Welding
- Painting
- Dispensing
- Assembling
- Polishing/Finishing
- Material Handling
- Packaging
- Palletizing
- Machine Loading

www.fppt.info

Industrial robot types

- Articulated
- Cylindrical
- Spherical
- SCARA
- Parallel link / Delta / Spider
- Cartesian / Linear / XYZ / Gantry
- Collaborative [Cobots]
- Wheeled / Mobile robots
  - [AMR – autonomous mobile robots]

www.fppt.info

Industrial robot terms

Robotics terms:

- Axes [degrees of freedom]
- Payload [lifting capacity]
- Working envelope / workspace [working volume]
- Speed [axis speed, tool speed]
- Accuracy
- Repeatability

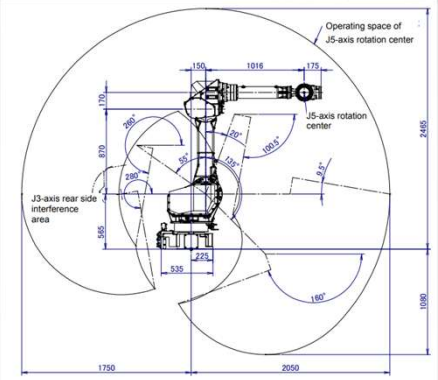

www.fppt.info

Industrial robot types

Articulated 4-6 axes

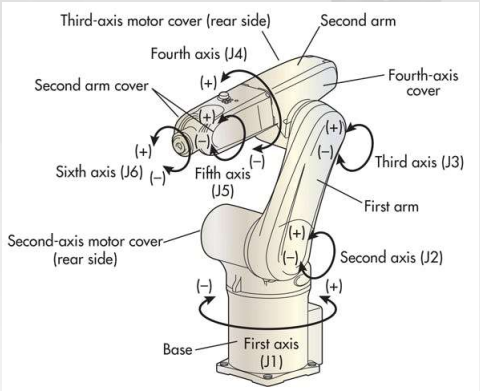

www.fppt.info

Industrial robot types

Articulated 4-6 axes

- Small: 4 kg (8.8 lb)

- Large: 2300 kg (~5000 lb)

www.fppt.info

Industrial robotic systems

Small articulated robots – fuel valve assembly:

www.fppt.info

Industrial robotic systems

Large articulated robot - Diecast mold handling:

www.fppt.info

Industrial robotic systems

Large articulated robots – steel blank handling:

www.fppt.info

Industrial robotic systems

Large articulated robot – box palletizing:

www.fppt.info

Industrial robot types

SCARA [Selective Compliance Articulated Robot Arm]

- High-speed
- High-precision assembly
- Payload: 1-20 kg

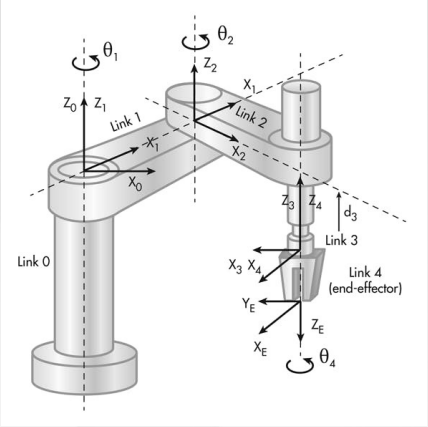

www.fppt.info

Industrial robot types

SCARA robots – high speed small part assembly:

www.fppt.info

Industrial robot types

Parallel link / delta / spider robot

- High-speed
- Payload: 1-12 kg

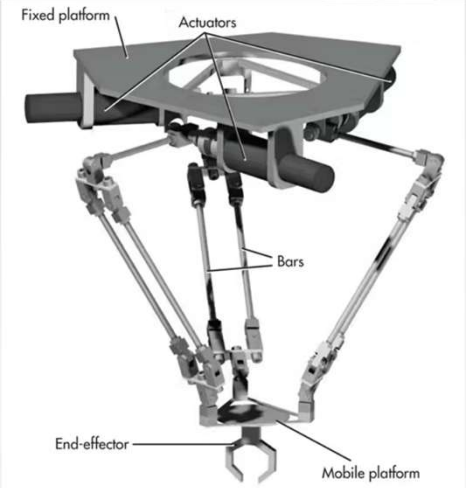

www.fppt.info

Industrial robot types

Delta robot application – high speed cartoner loading:

www.fppt.info

Industrial robot types

Collaborative [Cobot]

- Intended for direct human-robot interaction within a shared space
- Where humans and robots are in close proximity

www.fppt.info

Industrial robot types

Cobot - AI Powered Door Sanding

www.fppt.info

Industrial robot types

Mobile Robots

- Autonomous mobile robot [AMR]
- Can carry robot arm to create mobile manipulator

www.fppt.info

Industrial robot types

Mobile Robots in an Amazon warehouse

www.fppt.info

Industrial robots and VEX V5 use technologies that are more like each other than you might think!

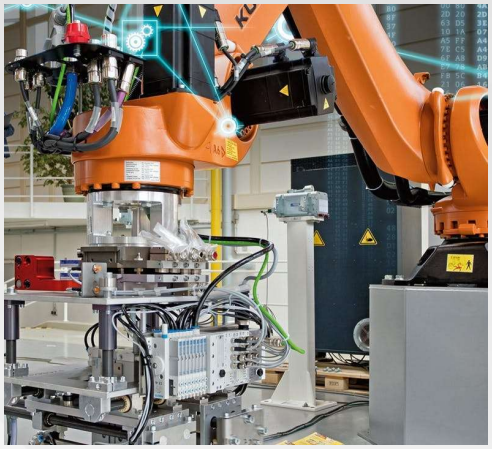

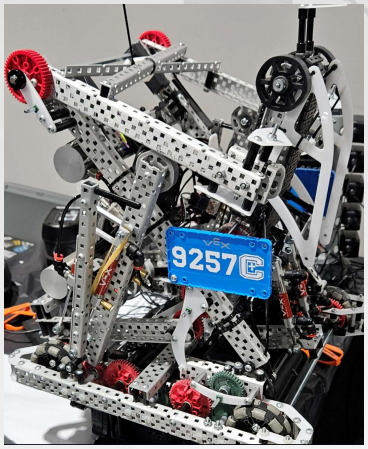

24

www.fppt.info

Industrial robot technology

- Computer/controller
  - Central controller (Motion planning, motor controllers, sensor interface)
- Motors, gear reducers, encoders
- Sensors (lasers, light, force)
- Vision cameras
- Lightweight materials
- Tooling (grippers, vacuum, pneumatics, welding torches, etc.)

25

www.fppt.info

VEX V5 robotic technology

- Controller VEX V5 brain
- Motors, gear reducers, encoders
- Sensors (light, force, distance, rotation, GPS)
- Cameras
- Lightweight materials – aluminum, plastic
- Tooling, mechanisms (grippers, intakes, flywheels/launchers)

26

www.fppt.info

VEX V5 robotic technology

V5 Brain

27

www.fppt.info

Industrial robot technology

Robot Controllers

28

www.fppt.info

VEX V5 robotic technology

V5 Controller

29

www.fppt.info

Industrial robot technology

Teach pendants

30

www.fppt.info

VEX V5 Robotic technology

V5 motors and gear reducers

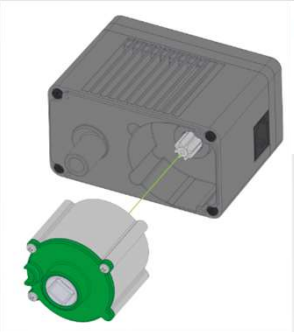

Planetary gear reducer cartridges:
36:1 (100 RPM) - High torque, low speed. Great for robot arms and lifting heavy objects
18:1 (200 RPM) - Standard gear ratio for drive train applications
6:1 (600 RPM) - Low torque, high speed. Best used for intake rollers and flywheels

31

www.fppt.info

31

Industrial robot technology

Servomotors

- Speeds up to 6000 RPM

High gear ratio reducers

- Harmonic drives
  - Ratio range from 30:1 up to 100:1
- Cycloidal drives
  - Ratio range from 6:1 up to 658,503:1

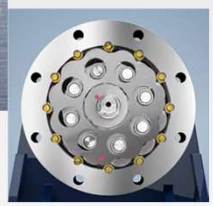

32

www.fppt.info

32

Harmonic (strain wave) drive

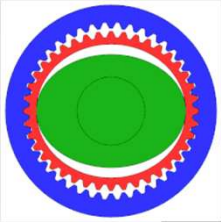

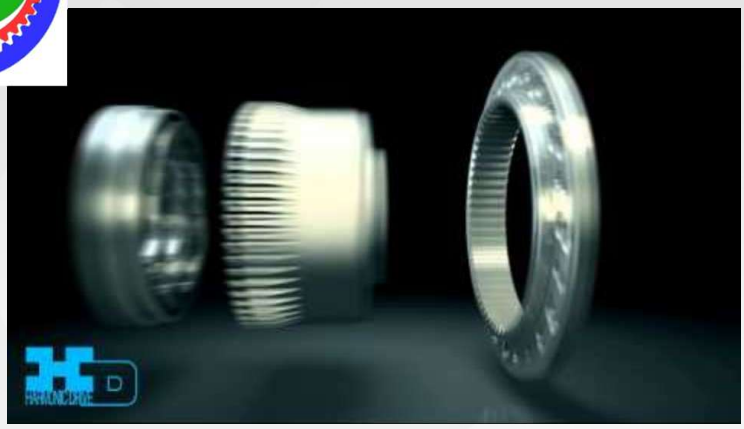

www.fppt.info

Cycloidal drive

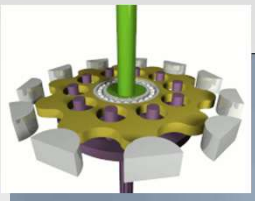

www.fppt.info

VEX V5 Robotic technology

Optical Encoders (Internal)

- Optical sensor with rotating slotted wheel
- 1800 ticks/rev with 36:1 gears (RED)
- 900 ticks/rev with 18:1 gears (GREEN)
- 300 ticks/rev with 6:1 gears (BLUE)

Rotation sensors

- Resolution: 4096 ticks/revolution
- Absolute encoder holds position with power off
- Angle measurement is based on a magnetic field generated by 2 magnets

35

www.fppt.info

35

VEX V5 Robotic technology

Sensors:

- Touch switches (bumper, limit)
- Laser distance

- Light

- Color/optical

- GPS

36

www.fppt.info

36

VEX V5 Robotic technology

Cameras / vision sensors

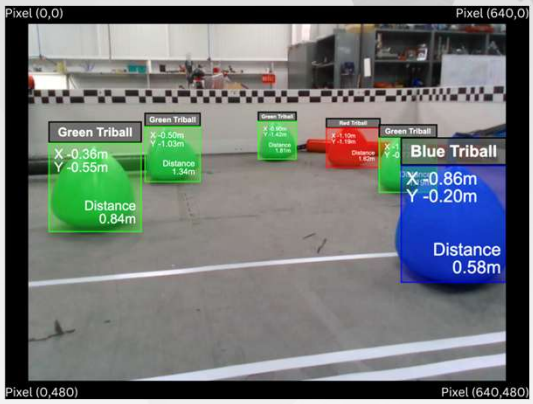

www.fppt.info

VEX V5 Robotic technology

Lightweight materials:

- Aluminum

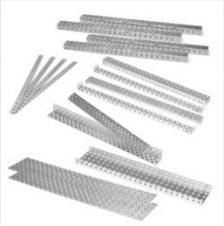

- Plastic

www.fppt.info

VEX V5 Robotic technology

Tooling (EOAT):

- Grippers/claws

- Flywheels

- Intakes

39

www.fppt.info

Technical disciplines in robotics

Robotics merges many technical disciplines:

- Mechanical Engineering
- Electrical Engineering
- Control Systems
- Computer Science

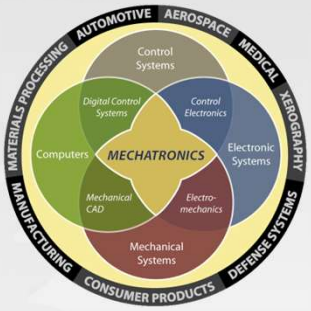

MECHATRONICS

40

www.fppt.info

Background & education

- Associates degree (2 yr.) for Technician level
- Bachelor of Science in engineering or computer science for most positions (4 yr.)
- Masters or PhD for research or advanced development positions
  - Masters - 2 years
  - PhD – 2-4 years

41

www.fppt.info

Robotics careers

Robot manufacturers
- Fanuc, Motoman
- Engineering development, Service, Sales

System builders / robot integrators
- Kinemetrix, Remtec, Bastian, Intelligrated
- Mech. Eng., Controls/Programming, System assembly, Sales

Companies that use robots [end users]
- Toyota, GE Appliances, Hitachi, Amazon
- Engineering, Maintenance

42

www.fppt.info

Skills, talents & interests

Math

- Algebra, geometry, trigonometry, calculus

Science

- Physics – forces, motion control
- Chemistry – materials

Computer Science

- Programming languages, applications

Collaboration/teamwork, business, project management and leadership skills

Problem solving skills

43

www.fppt.info

How to get technical experience while in school

Programming and technology classes

- C++, Python, Java
- iPhone/Android apps
- Free classes on Coursera
- Arduino controller projects
- Raspberry Pi computers
- 3D CAD drawing packages
- Summer camps

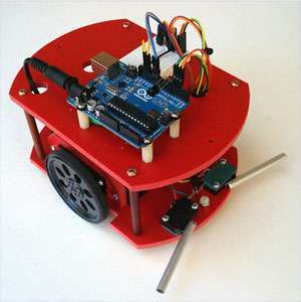

44

www.fppt.info

Job requirements

Research job postings for requirements:

- Mechanical engineers
- Electrical / Controls engineers
- Software engineers
- Fanuc https://www.fanucamerica.com/about-us/careers
- ARM https://www.roboticscareer.org/
- Toyota https://careers.toyota.com/us/en/c/manufacturing-production-engineering-jobs
- https://www.automate.org/industry-insights/robotics-and-automation-career-paths

www.fppt.info

Steve Bolin's background

Factory automation engineering

- Robotics integration
- Automated packaging
- Machine vision systems
- Material handling engineering

Project engineering/project management

Sales/application engineering

www.fppt.info

Steve Bolin's background

Manhattan College / University

- BSME Machine design

Ohio State University

- MSME Robot motion planning

Xavier University

- MBA, concentration in Business intelligence/Data mining

47

www.fppt.info

Matt Schroff's background

Embry Riddle Aeronautical University

- BS/MS Aeronautical Science, Minor in Education

US Air Force

- Public Affairs Officer/Chief of Public Affairs
- Professor of Aerospace Studies at the University of Dayton and Wright State University
- Retired in 2023 as Lieutenant Colonel

Kroger Manufacturing

- Maintenance Business Unit Leader
- Operations Supervisor

Fanuc America Corp. – Robotics Division

- District Sales Manager

48

www.fppt.info

How did I get started in robotics?

Manhattan College

- Senior project

Ohio State University

- Robot kinematics / motion control

www.fppt.info

Robotics judge/coach/mentor

FIRST Robotics

- 2008 - 2011 FLL/FTC Competition Judge/Inspector
- 2012 - 2016 FTC Coach St. Henry HS Erlanger

VEX Robotics

- 2016 - 2019 VRC Coach St. Henry HS
- 2016 - 2019 VEX IQ Coach St. Paul School Florence
- 2019 – 2025 VRC Mentor Covington Catholic

www.fppt.info

VEX/RECF Sponsors

https://recf.org/about-us/our-partners/

51

www.fppt.info

Fanuc CRX-5iA Robot Demo

Robot type: Cobot

Axes: 6

Reach: 994 mm (39”)

Payload: 5 kg (11 lb.)

Online basic training modules:
https://crx.fanucamerica.com/training

www.fppt.info

Questions???

53

www.fppt.info

Contact Information

Steve Bolin – Bolin Robotics

www.linkedin.com/in/stevebolin302

BolinRobotics.com

Matt Schroff - Fanuc Robotics

https://www.linkedin.com/in/mattschroff/

https://www.fanucamerica.com/products/robots

www.fppt.info

www.fppt.info

Application videos

www.fppt.info

Machine Load Unload Compilation
Remtec Automation

www.fppt.info

57

Picking and packing salami snacks
ABB Robotics

www.fppt.info

58

Grenade Fuze Clip Retrofit
Kinemetrix

www.fppt.info