MINISTRY OF ROAD TRANSPORT & HIGHWAYS

SPECIFICATIONS FOR ROAD AND BRIDGE WORKS

(Fifth Revision)

Published By the Indian Roads Congress,
on Behalf of the Govt. of India,
Ministry of Road Transport & Highways

Copies can be had from Indian Roads Congress,
Jamnagar House, Shahjahan Road, New Delhi &
Sector 6, R.K. Puram, Kama Koti Marg, New Delhi

Price Rs. 3,000/-
Plus packing & postage charges

First Published	:	April, 1973
Reprinted	:	November, 1975
Reprinted	:	May, 1978
Reprinted	:	September, 1981
Reprinted	:	October, 1983
Reprinted	:	April, 1986
Second Revision	:	February, 1988
Reprinted	:	August, 1988
Reprinted	:	April, 1990
Reprinted	:	June, 1992
Reprinted	:	February, 1993
Reprinted	:	July, 1993
Third Revision	:	April, 1995
Reprinted	:	January, 1997 (Incorporates Corrigendum No.1 & 2 and Col. 12 & 15 p. 662)
Reprinted	:	January, 1998
Reprinted	:	January, 1999
Reprinted	:	May, 1999
Reprinted	:	February, 2000
Reprinted	:	September, 2000 (Section 700 "Geosynthetics" Changed to "Geosynthetics and Reinforced Earth")
Fourth Revision	:	August, 2001
Reprinted	:	January, 2002
Reprinted	:	March, 2002
Reprinted	:	September 2002
Reprinted	:	November, 2002
Reprinted	:	March, 2003
Reprinted	:	June, 2003
Reprinted	:	July, 2003
Reprinted	:	December, 2003
Reprinted	:	May, 2004
Reprinted	:	September, 2004
Reprinted	:	April, 2005
Reprinted	:	October, 2005
Reprinted	:	March, 2006
Reprinted	:	September, 2006
Reprinted	:	March, 2007
Reprinted	:	August, 2007
Reprinted	:	February, 2008
Reprinted	:	August, 2008
Reprinted	:	November, 2008
Reprinted	:	March, 2009
Reprinted	:	June, 2009
Reprinted	:	December, 2009
Reprinted	:	March, 2010
Reprinted	:	July, 2010
Fifth Revision	:	April, 2013

(Rights of publication and Translation are reserved)

Printed at: India Offset Press, A-1 Mayapuri Ind. Area Phase-1 New Delhi-11064

(1000 copies)

PREFACE TO THE FIFTH REVISION

This edition of the Specifications for Road and Bridge Works marks the Fifth Revision. In the last decade and a half, significant developments have taken place in the highways sector. The massive National Highways Development Projects (NHDP) undertaken by the Government of India is in progress involving execution of a large number of high value road projects. These require adoption of latest international practices so as to achieve technical execellence and the best quality. Concrete bridges have also undergone major changes with deveopment of new structural forms, new methods of computer based analysis and design and development of high strength materials, IRC:112 for concrete bridges based on the limit state method has come into force. Over the past few years, many IRC codes have also been completely revised necessitating extensive changes in the Ministry's specifications for road and bridge works.

Some of the important additions in this revision of Specifications for Road and Bridge Works cover stone mastic asphalt, microsurfacing, sand asphalt base course, prefabricated vertical drains (PVD), natural geo textiles, geo cells for use in base and sub base in pavement and slope protection, variable message sign boards, soil nailing, cold applied retro-reflective paints, audible and vibratory pavement markings, solar powered road markers, traffic control & safety devices in construction zone, traffic impact attenuators and advance traffic management system. Some of the new areas covered in bridges include high performance concrete, HDPE sheathings, Pot-PTFE bearings, jack down method of well sinking, dynamic testing of piles and mechanically woven wire crates for gabions.

The Fifth Revision of the Specifications for Road and Bridge Works is the result of the concerted efforts of the officers of the Roads Wing and other professionals who contributed to the drafting of this document. I wish to express my gratitude to all of them and the Indian Roads Congress for undertaking the assignment of bringing out this publication.

Feedback and suggestion for further improvement would be welcome from users of this edition.

(C. Kandasamy)
DG(RD) & SS
03-01-2013

CONTENTS

Section No.	Section	Title/Clause No.	Page No.
100	**GENERAL**		
	101	Introduction	1
	102	Definitions	1
	103	Materials and Test Standards	5
	104	Sieve Designations	5
	105	Scope of Work	6
	106	Construction Equipment	10
	107	Drawings	11
	108	Site Information	11
	109	Setting Out	11
	110	Public Utilities	13
	111	Precautions for Safeguarding the Environment	15
	112	Arrangement for Traffic During Construction	19
	113	General Rules for the Measurement of Works for Payment	22
	114	Scope of Rates for Different Items of Work	24
	115	Methodology and Sequence of Work	26
	116	Crushed Stone Aggregates	28
	117	Supply of Quarry Samples	28
	118	Approval of Materials	28
	119	Use of Surfaces by Traffic	28
	120	Field Laboratory	29
	121	Supply of Project Record	33
200	**SITE CLEARANCE**		
	201	Clearing and Grubbing	37
	202	Dismantling Culverts, Bridges and Other Structures/ Pavements	39
300	**EARTHWORK, EROSION CONTROL AND DRAINAGE**		
	301	Excavation for Roadway and Drains	45
	302	Blasting Operations	53
	303	Presplitting Rock Excavation Slopes	56

Contents

304	Excavation for Structures	59
305	Embankment Construction	63
306	Soil Erosion and Sedimentation Control	77
307	Turfing with Sods	79
308	Seeding and Mulching	82
309	Surface/Sub-Surface Drains	85
310	Preparation and Surface Treatment of Formation	89
311	Works to be Kept Free of Water	90
312	Water Courses at Culverts	90
313	Rockfill Embankment	91
314	Ground Improvement for Weak Embankament Foundation Using Geosynthetic Drains and Stone Columns	92

400 SUB-BASES, BASES (NON-BITUMINOUS) AND SHOULDERS

401	Granular Sub-Base	109
402	Lime Treated Soil for Improved Sub-Grade/Sub-Base	112
403	Cement Treated Soil and Cement-Flyash Treated Sub Base/Base	116
404	Water Bound Macadam Sub-Base/Base	121
405	Crushed Cement Concrete Sub-Base	129
406	Wet Mix Macadam Sub-Base/Base	131
407	Crusher-Run Macadam Base	136
408	Shoulders, Islands and Median	139
409	Cement Concrete Kerb and Kerb with Channel	142
410	Footpaths and Separators	143

500 BASES AND SURFACE COURSES (BITUMINOUS)

501	General Requirements for Bituminous Pavement Layers	149
502	Prime Coat Over Granular Base	166
503	Tack Coat	168
504	Bituminous Macadam	170
505	Dense Bituminous Macadam	174
506	Sand Asphalt Base Course	183
507	Bituminous Concrete	188
508	Close-Graded Premix Surfacing/Mixed Seal Surfacing	192

Contents

	509	Surface Dressing	194
	510	Open-Graded Premix Surfacing	198
	511	Seal Coat	205
	512	Slurry Seal	207
	513	Fog Spray	213
	514	Micro-Surfacing	215
	515	Stone Matrix Asphalt (SMA)	219
	516	Mastic Asphalt	225
	517	Crack Prevention Courses	231
	518	Bituminous Cold Mix (Including Gravel Emulsion)	234
	519	Recycling of Bituminous Pavement	242
	520	Supply of Stone Aggregates for Pavement Courses	249
600	**CONCRETE PAVEMENT**		
	601	Dry Lean Cement Concrete Sub-Base	255
	602	Cement Concrete Pavement	263
700	**GEOSYNTHETICS**		
	701	Geosynthetics for Road and Bridge Works	299
	702	Geotextiles for Drainage, Separation and Erosion Control	302
	703	Geogrid	307
	704	Geocomposite Drains	309
	705	Geocell for Slope Protection	312
	706	Geosynthetic Mat	314
	707	Natural Geotextile	316
	708	Paving Fabrics/Glass Grids	318
800	**TRAFFIC SIGNS, MARKINGS AND OTHER ROAD APPURTENANCES**		
	801	Traffic Signs	325
	802	Overhead Signs	335
	803	Road Markings	338
	804	Reflective Pavement Markers (Road Studs) and Solar Powered Road Markers (Solar Studs)	353
	805	Distance Indicator Posts	356
	806	Road Delineators	357

Contents

807	Boundary Stones	357
808	Fencing	358
809	Tubular Steel Railing	359
810	Structural Steel Railing	359
811	Crash Barriers	360
812	Road Traffic Signals	364
813	Traffic Control and Safety Devices in Construction Zone	366
814	Traffic Impact Attenuators	371
815	Semi Automatic Toll Collection System	372
816	Advanced Traffic Management Systems (ATMS)	381

900 QUALITY CONTROL FOR ROAD WORKS

901	General	415
902	Control of Alignment, Level and Surface Regularity	417
903	Quality Control Tests During Construction	421

1000 MATERIALS FOR STRUCTURES

1001	General	439
1002	Sources of Materials	439
1003	Bricks	439
1004	Stones and Blocks	440
1005	Cast Iron	440
1006	Cement	440
1007	Coarse Aggregates	442
1008	Fine Aggregates	443
1009	Steel	443
1010	Water	447
1011	Timber	449
1012	Concrete Admixtures	449
1013	Reinforced and Prestressed Concrete Pipes	451
1014	Storage of Materials	451
1015	Tests and Standard of Acceptance	453

1100 PIPE FOUNDATIONS

1101	Description	457
1102	Subsurface Investigations	457
1103	Type of Piles	458

Contents

1104	Materials	458
1105	Test Piles	459
1106	Precast Concrete Piles	459
1107	Cast In Situ Concrete Piles	461
1108	Steel Piles	465
1109	Timber Piles	466
1110	Driving Equipment	466
1111	Driving	467
1112	Raker (Inclined) Piles	470
1113	Pile Tests	470
1114	Pile Cap	472
1115	Important Considerations, Inspection/Precautions for Different Types of Piles	472
1116	Tolerances	474
1117	Tests and Standards of Acceptance	475
1118	Measurements for Payment	475
1119	Rate	475

1200 WELL FOUNDATIONS

1201	Description	479
1202	General	479
1203	Setting Out and Preparations for Sinking	479
1204	Cutting Edge	480
1205	Well Curb	481
1206	Floating Caissons	482
1207	Well Steining	483
1208	Well Sinking	483
1209	Bottom Plug	494
1210	Sand Filling	495
1211	Top Plug	495
1212	Well Cap	495
1213	Tolerances	495
1214	Tests and Standards of Acceptance	496
1215	Measurements for Payment	496
1216	Rate	497

Contents

1300 BRICK MASONRY

1301	Description	501
1302	Materials	501
1303	Personnel	501
1304	Cement Mortar	501
1305	Soaking of Bricks	502
1306	Joints	502
1307	Laying	502
1308	Jointing Old and New Work	503
1309	Curing	503
1310	Scaffolding	503
1311	Equipment	504
1312	Finishing of Surfaces	504
1313	Coping for Wing/Return/Parapet Wall	505
1314	Acceptance of Work	506
1315	Measurements for Payment	506
1316	Rate	506

1400 STONE AND CONCRETE BLOCK MASONRY

1401	Description	509
1402	Materials	509
1403	Personnel	509
1404	Type of Masonry	509
1405	Construction	509
1406	Pointing	515
1407	Curing	515
1408	Scaffolding	515
1409	Weep Holes	515
1410	Jointing with Existing Structures	516
1411	Coping for Wing/Return/Parapet Walls	516
1412	Tests and Standard of Acceptance	516
1413	Measurements for Payment	516
1414	Rate	516

1500 FORMWORK

1501	Description	519
1502	Materials	519

Contents

1503	Design of Formwork	519
1504	Workmanship	519
1505	Lining of Formwork	521
1506	Precautions	521
1507	Preparation of Formwork Before Concreting	522
1508	Removal of Formwork	522
1509	Re-Use of Formwork	523
1510	Specialized Formwork	523
1511	Tests and Standards of Acceptance	524
1512	Measurements for Payment	524
1513	Rate	524

1600 STEEL REINFORCEMENT

1601	Description	527
1602	General	527
1603	Protection of Reinforcement	527
1604	Bending of Reinforcement	527
1605	Placing of Reinforcement	528
1606	Bar Splices	529
1607	Testing and Acceptance	531
1608	Measurement for Payment	531
1609	Rate	532

1700 STRUCTURAL CONCRETE

1701	Description	535
1702	Materials	535
1703	Grades of Concrete	535
1704	Proportioning of Concrete	538
1705	Admixtures	543
1706	Size of Coarse Aggregates	544
1707	Equipment	545
1708	Batchinh, Mixing, Transporting, Placing and Compaction	546
1709	Construction Joints	550
1710	Concreting Under Water	551
1711	Concreting in Extreme Weather	552
1712	Protection and Curing	553
1713	Finishing	555

	1714	Concrete with Blended Cements or Mineral Admixtures	555
	1715	High Performance Concrete	556
	1716	Tolerances	558
	1717	Tests and Standards of Acceptance	558
	1718	Measurements for Payment	562
	1719	Rate	562
1800	**PRESTRESSING**		
	1801	Description	565
	1802	General	565
	1803	Materials	565
	1804	Testing of Prestressing Steel and Anchorages	568
	1805	Workmanship	568
	1806	Supervision	572
	1807	Tensioning Equipment	572
	1808	Post Tensioning	573
	1809	Grouting of Prestressed Tendons	574
	1810	Pre-Tensioning	575
	1811	Protection of Ends	579
	1812	Safety Precautions During Tensioning	579
	1813	Surface Preparation	579
	1814	Transportation Storage and Handling of Precast Girders	580
	1815	Tolerances	581
	1816	Tests and Standards of Acceptance	581
	1817	Measurements for Payment	581
	1818	Rate	582
1900	**STRUCTURAL STEEL**		
	1901	Description	585
	1902	General	585
	1903	Materials	585
	1904	Fabrication	589
	1905	Erection	605
	1906	Painting	614
	1907	Tests and Standards of Acceptance	618
	1908	Measurements for Payment	619
	1909	Rate	620

Contents

2000	**BEARINGS**		
	2001	Description	623
	2002	General	623
	2003	Steel Bearings	624
	2004	Special Bearings	631
	2005	Elastomeric Bearings	633
	2006	Pot Bearings	648
	2007	Inspection and Testing	659
	2008	Test and Standards of Acceptance	659
	2009	Measurements for Payment	659
	2010	Rate	660
2100	**OPEN FOUNDATIONS**		
	2101	Description	663
	2102	Materials	663
	2103	General	663
	2104	Workmanship	663
	2105	Tests and Standards of Acceptance	666
	2106	Tolerances	666
	2107	Measurement for Payment	666
	2108	Rate	666
2200	**SUBSTRUCTURE**		
	2201	Description	669
	2202	Materials	669
	2203	General	669
	2204	Piers and Abutments	669
	2205	Pier Cap and Abutment Cap	670
	2206	Dirt Wall, Return Wall and Wing Wall	671
	2207	Tests and Standards of Acceptance	671
	2208	Tolerances in Concrete Elements	671
	2209	Measurements for Payment	672
	2210	Rate	672
2300	**CONCRETE SUPERSTRUCTURE**		
	2301	Description	675
	2302	Materials	675

Contents

	2303	General	675
	2304	Reinforced Concrete Construction	675
	2305	Prestressed Concrete Construction	676
	2306	Cast In-Place Voided Slabs	682
	2307	Tolerances	682
	2308	Tests and Standards of Acceptance	683
	2309	Measurement for Payment	683
	2310	Rate	684
2400	**SURFACE AND SUB-SURFACE GEOTECHNICAL INVESTIGATION**		
	2401	Description	687
	2402	Extent and Number of Bores	687
	2403	Depth of Bores	688
	2404	Detailed Investigation	688
	2405	Detailed Investigation for Bridge Foundations Resting on Rock	689
	2406	Boring	692
	2407	Records of Boring and Trial Pits	692
	2408	Methods of Sampling	694
	2409	Procedure for Taking Samples	694
	2410	Preservation, Handling and Labelling of Samples	696
	2411	Tests for Investigation of Shallow Foundations of Bridges	697
	2412	Tests for Investigation for Deep Foundations of Bridges	697
	2413	Testing of Material for Foundations of Guide Bunds and High Embankments	698
	2414	Measurements for Payment	698
	2415	Rate	700
2500	**RIVER TRAINING WORK AND PROTECTION WORK**		
	2501	Description	703
	2502	Guide Bund	703
	2503	Apron	704
	2504	Pitching/Revetment on Slopes	709
	2505	Rubble Stone/Cement Concrete Block Flooring Over Cement Concrete Bedding	711
	2506	Dry Rubble Flooring	712

	2507	Curtain Wall and Flexible Apron	712
	2508	Tests and Standards of Acceptance	713
	2509	Measurements for Payment	713
	2510	Rate	713
2600	**EXPANSION JOINTS**		
	2601	Description	723
	2602	General	723
	2603	Performance Requirements	724
	2604	Filler Joints	725
	2605	Reinforced Elastomeric Joint	726
	2606	Single Strip/Box Seal Joint	728
	2607	Modular Strip/Box Seal Expansion Joints	730
	2608	Asphaltic Plug Joint	732
	2609	Compression Seal Joint	734
	2610	Installation of Expansion Joints	736
	2611		744
	2612	Testing and Acceptance Standards	744
	2613	Tests and Standards of Acceptance	748
	2614	Measurements for Payment	748
	2615	Rate	748
2700	**WEARING COAT AND APPURTENANCES**		
	2701	Description	751
	2702	Wearing Coat	751
	2703	Railings and Crash Barrier	752
	2704	Approach Slab	754
	2705	Drainage Spouts	754
	2706	Weep Holes	755
	2707	Tests and Standards of Acceptance	755
	2708	Measurements for Payment	755
	2709	Rate	756
2800	**REPAIR OF STRUCTURES**		
	2801	Description	759
	2802	General	759
	2803	Sealing of Cracks by Injection of Epoxy Resin	759

Contents

	2804	Replacement of Spalled Concrete by Epoxy Mortar/Polymer Mortar	766
	2805	Epoxy Bonding of New Concrete to Old Concrete	769
	2806	Cement Grouting	769
	2807	Guniting/Shotcreting	771
	2808	Protective Surface Coating of Concrete by Acrylic Elastomeric Coating	773
	2809	Protective Surface Coating of Concrete by Patented Systems of Coating	775
	2810	Replacement of Bearings	776
	2811	Repair and Replacement of Wearing Coat	776
	2812	External Prestressing	777
	2813	Tests and Standards of Acceptance	778
	2814	Measurements for Payment	779
	2815	Rate	779
2900	**PIPE CULVERTS**		
	2901	Scope	783
	2902	Materials	783
	2903	Excavation for Pipe	783
	2904	Bedding for Pipe	784
	2905	Laying of Pipe	784
	2906	Jointing	785
	2907	Backfilling	785
	2908	Headwalls and Other Ancillary Works	786
	2909	Opening to Traffic	786
	2910	Measurement for Payment	786
	2911	Rate	786
3000	**MAINTENANCE OF ROAD**		
	3001	General	789
	3002	Restoration of Rain Cuts	789
	3003	Maintenance of Earthen Shoulders	790
	3004	Bituminous Work in Connection with Maintenance and Repair	791
	3005	Maintenance of Cement Concrete Road	797

Contents

3100 REINFORCED EARTH

3101	Scope	801
3102	Design	801
3103	Reinforcing Element	801
3104	Earth Fill	804
3105	Facia Material	805
3106	Construction Details	807
3107	Reinforced Soil Slopes	810
3108	System Responsibility, Performance Bond	811
3109	Measurement for Payment	812
3110	Rate	812

3200 SOIL NAILING

3201	Scope	821
3202	Nail Installation Methods	821
3203	Construction Materials	821
3204	Facing Types	822
3205	Construction Sequence	823
3206	Geotechnical Aspects	823
3207	Analysis of Failure Modes	824
3208	Initial Design Considerations	824
3209	Other Design Considerations	825
3210	Field Pullout Testing	826
3211	Measurement for Payment	827
3212	Rates	827
3213	References	829

APPENDICES

Appendix 1	List of IRC Publications Referred to in the Specifications		831
Appendix 2	List of Indian and Foreign Standards Referred to in the Specifications		833
Appendix 3	Method of Sieving for Wet Soils to Determine the Degree of Pulverisation		847
Appendix 4	Anti-Stripping Agents Used for Bituminous Materials and Mixes		848
Appendix	1200/1-1	History of Sinking of Well	855
	1200/1-2	Plan of Well Nos.	856
	1200/2	Tilt and Shift in Well Nos	857

Contents

Appendix	1500/1	Information to be Supplied by the Manufacturers of Proprietary Systems	859
Appendix	1700/1	Specification for Construction Joints	861
Appendix	18001	Tests on Sheathing Ducts	864
	1800/2	Prestressing Report	871
	1800/3	Specifications for Grouting of Post-Tensioned Cables in Prestressed Concrete Bridges	873
	1800/4	Grouting Record	882
Appendix	2800		883

100

GENERAL

101 INTRODUCTION

These specifications shall apply to all such road and bridge works as are required to be executed under the Contract or otherwise directed by the Engineer-in-Charge (hereinafter referred to as the Engineer). In every case, the work shall be carried out to the satisfaction of the Engineer and conform to the location, lines, dimensions, grades and cross-sections shown on the drawings or as decided by the Engineer. The quality of materials, processing of materials as may be needed at the site, salient features of the construction work and quality of finished work, measures for safety of workers and public and traffic arrangements during execution shall comply with the requirements set forth in succeeding sections. Where the drawings and Specifications describe a portion of the work only in general terms, and not in complete detail, it shall be understood that only the sound engineering practice is to prevail, materials and workmanship of the best quality are to be employed and the instructions of the Engineer are to be fully complied with.

A list of Indian Roads Congress (IRC) Specifications and recommended Codes of Practice which have been referred in these Specifications is given at Appendix-1. The latest edition of all Specifications/Standards/Codes of IRC till 60 (sixty) days before the final date of submission of the tender, shall be adopted.

In case of any conflict or inconsistency in the provisions of the applicable Specifications/ Standards/Codes of IRC, provisions contained in these Specifications shall apply.

102 DEFINITIONS

The words like Contract, Contractor, Engineer (synonymous with Engineer-in-charge), Drawings, Employer, Government, Works and Work Site used in these Specifications shall be considered to have the meaning as understood from the definitions of these terms given in the General Conditions of Contract.

The following abbreviations shall have the meaning as set forth below:-

AASHTO	:	American Association of State Highway and Transportation Officials
ASTM	:	American Society for Testing and Materials
BS	:	British Standard published by the British Standards Institution
BIS	:	Bureau of Indian Standards
BOQ	:	Bill of Quantities
CBR	:	California Bearing Ratio
IRC	:	Indian Roads Congress

IS	:	Indian Standard published by the Bureau of Indian Standards
QA	:	Quality Assurance

The various elements in the cross-section of a road referred to in these Specifications are shown in the cross-sections in Figs. 100.1, 100.2 and 100.3.

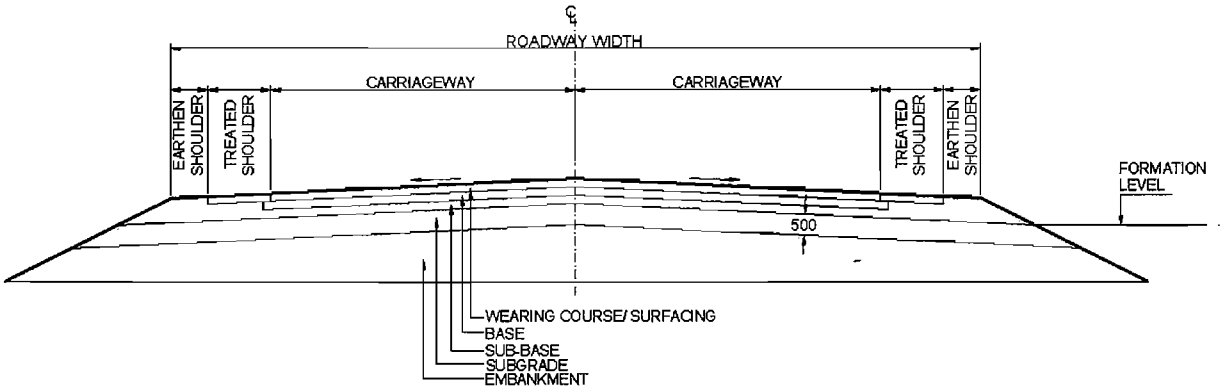

Fig. 100.1 Terms Used in the Specifications to Describe Road Cross-Section Elements with a Flexible Pavement

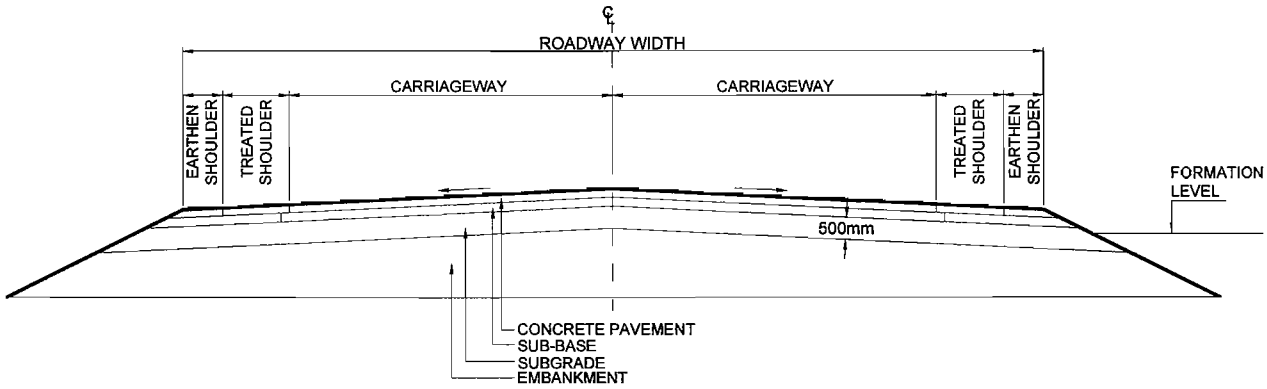

Fig. 100.2 Terms Used in the Specifications to Describe Road Cross-Section Elements with a Concrete Pavement

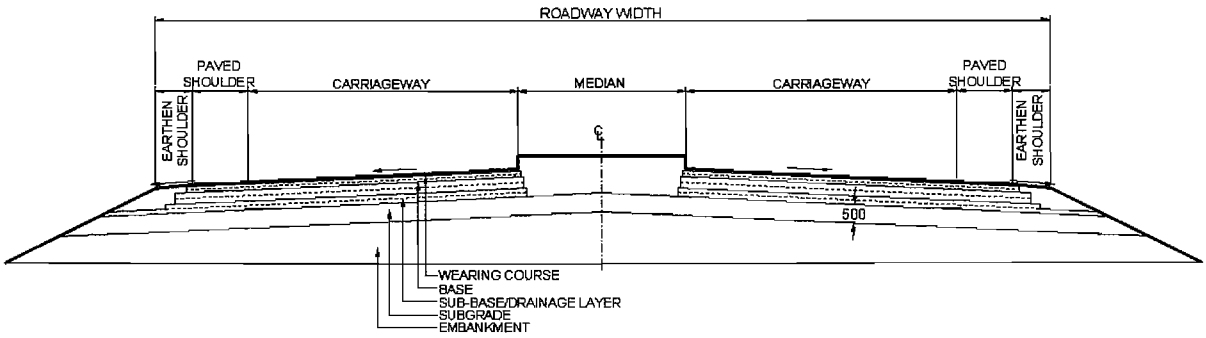

Fig. 100.3 Terms Used in the Specifications to Describe Road Cross-Section Elements of a Dual Carriageway

Treated shoulders shown in the cross-section shall be of following types:-

i) "Hard" shoulders which have select gravel/moorum, any other compacted granular layer or bricks.

ii) "Paved" shoulders which have a bituminous surfacing over granular layers.

iii) "Tied" or "Widened" concrete shoulders of same thickness as the carriageway pavement

103 MATERIALS AND TEST STANDARDS

The relevant standards for materials, as well as the testing procedures, have been indicated at appropriate places in the specifications. A list of these standards with their full title are included at Appendix–2.

104 SIEVE DESIGNATIONS

The sieve designations referred to in the Specifications correspond to those specified by Bureau of Indian Standards in IS:460. Table 100-1 gives the list of the commonly used IS sieves.

Table 100-1 : Designation of Test Sieves
IS Designation Conforming to IS:460

(in mm)	(in Micron)
* 125	850
106	
* 90	* 710
75	600
* 63	* 500
53	425
	355
	300
* 45	* 250
37.5	212
* 31.5	* 180
26.5	150

* 22.4	* 125
19.0	106
* 16.0	* 90
13.2	75
* 11.2	* 63
9.50	53
* 8.00	* 45
6.70	
* 5.60	5
4.75	2
* 4.00	
3.35	
* 2.80	
2.36	
* 2.00	
1.70	
* 1.40	
1.18	
* 1.00	

Notes: 1) '*' are the principal sizes stated in ISO-565
2) Sieve sizes given in BS:410 & ASTM–E 11 are same as in IS:460
3) Only sieves with square openings shall be used.

105 SCOPE OF WORK

105.1 The work to be carried out under the Contract shall consist of the various items as generally described in the Contract Documents as well as in the Bill of Quantities furnished in the Contract Documents.

105.2 Conformity with Drawings/Allowable Deviations

105.2.1 All works performed and all materials furnished shall be in conformity with the lines, grades, typical sections, dimensions, material requirements, and tolerances shown in the drawings or as indicated in the Specifications.

105.2.2 The works to be performed shall also include all general works preparatory to the construction of roads, bridges, structures, canal crossings, drainage and all other related works. The works shall include work of any kind necessary for the due and satisfactory construction, completion and maintenance of works to the intent and meaning of the drawings and these Specifications and further drawings and orders that may be issued by the Engineer from time to time. The scope of work shall include compliance by the Contractor with all Conditions of Contract, whether specifically mentioned or not in the various Sections of these Specifications, all materials, apparatus, plant, equipment, tools, fuel, water, strutting, timbering, transport, offices, stores, workshop, staff, labour and the provision of proper and sufficient protective works, diversions, temporary fencing and lighting. It shall include all works related to safety of road user. It shall also include safety of workers at construction site, first-aid equipment, suitable accommodation for the staff and workmen with adequate sanitary arrangements, the effecting and maintenance of all insurances, the payment of all wages, salaries, fees, royalties, duties or other charges arising out of the erection of works and the regular clearance of rubbish, reinstatement and clearing-up of the site as may be required on completion of works, safety of the public and protection of the works and adjoining land/ structures.

105.3 The Contractor shall ensure that all actions are taken to build in quality assurance (QA) in the planning, management and execution of works. The quality assurance shall cover all stages of work such as setting out, selection of materials, selection of construction methods, selection of equipment and plant, deployment of personnel and supervisory staff, quality control testing, etc. The QA programme shall cover the details as per IRC:SP:47 and IRC:SP:57. These shall broadly cover quality assurance aspects of all services rendered, all items to be supplied and all activities to be performed under the contract including temporary structures and equipment which will influence the quality of the completed works or the progress of the contract.

As a minimum, it shall cover the following :

i) Organisation and management responsibility,

ii) Document and data control,

iii) Construction programme,

iv) Method statement,

v) Process control,

vi) Working, inspection, testing and documentary procedures,

vii) Arrangement for smooth and safe traffic flow during construction and maintenance,

viii) Control and documentation of purchasing and handling of materials,

ix) Maintenance of records for non-conformity and timely corrective actions,

x) Internal quality audit,

xi) Training of staff,

xii) Environment Management Plan (EMP).

The QA plan shall be submitted to the Engineer for approval, not later than 28 days from the date of signing of the contract agreement. The work of building in quality assurance shall be deemed to be covered in the scope of the work.

105.4 The Contractor shall furnish, at least 7 days in advance, unless otherwise stipulated in the contract, his programme of commencement of each item of work, including the method statement including deployment of plant and equipment for the works included in the contract and any other work for which the Engineer may demand the method statement. He shall provide all information to the satisfaction of the Engineer to ensure its adequacy. The sole responsibility for the safety and adequacy of the methods adopted by the Contractor will, however, rest on the Contractor, irrespective of any approval given by the Engineer.

105.5 Inspection of Materials Before Incorporation

105.5.1 All materials shall be inspected, tested and accepted by the Engineer as per these specifications, before incorporation in the work. The frequencies and methods of sampling and testing materials, including those required for definite purpose and not covered by these specifications shall be in accordance to the relevant IRC or BIS or AASHTO/ASTM/ BS Standards in order of priority.

105.5.2 All materials or work not conforming to the requirements of the Specifications shall be considered unacceptable and rejected. The unacceptable materials or work that are rejected shall be immediately removed unless the defects are corrected and approved by the Engineer. If the Contractor fails to comply promptly with any order of the Engineer made under the provisions of this Clause, the Engineer has the authority to remove and replace unacceptable materials or work and to deduct from money due to the Contractor the cost of removal and replacement.

105.6 Inspection of Materials at Source

The Engineer may choose to inspect material at source. In the event, the following conditions shall be met.

a) The Contractor and the manufacturer of material shall assist and co-operate with the Engineer in carrying out the inspection.

b) The Engineer shall have right to enter areas of plant where the manufacture or production of material is carried out.

105.7 Delivery, Storage and Handling of Materials

105.7.1 All materials shall be handled and stored in appropriate manner to preserve their quality and fitness for the work. During the handling of all aggregates or other construction materials, special care shall be taken to prevent contamination. Furthermore, aggregate shall be handled in such a manner as to prevent segregation.

105.7.2 Vehicles used in transporting construction material shall be kept clean and in proper working condition so as to prevent the loss of materials during transportation and meet the requirements of the Specifications.

105.7.3 The Contractor may be allowed to store materials and equipment within the right-of-way at location approved by the Engineer, but shall be responsible for the restoration and repair of any damage to plantation, signs, property or any assets resulting from such operations. Any additional space that may be needed for storage purposes and for placing of plant and equipment shall be provided by the Contractor at no additional cost to the Employer.

105.8 Materials Furnished by the Employer

When the Contract provides that certain materials required to complete the work will be supplied by the Employer, such material will be delivered or made available to the Contractor at the location(s) specified in the Contract.

The Contractor shall be responsible for all damages occurring to the materials furnished by the Employer while the materials are in his possession. Any demurrage or storage charges shall also be the responsibility of the Contractor.

The Contractor shall include the cost of handling, transportation and placing all Employer-furnished materials in the Contract unit price for the relevant pay item.

105.9 Laws to be Observed

The Contractor shall observe and comply with all Central and State laws, local laws and ordinance which affect those employed on the work or affect the conduct of the work.

The Contractor shall provide all safeguards, safety devices, and protective equipment and take any other actions necessary for safety and health of employees on the project.

105.10 Patented Devices, Materials and Processes

If the Contractor is required or desires with the approval of the Engineer to use any design, device, material or process covered by trademark, patent or copyright, the Contractor shall

obtain the right for its use by legal agreement with the patentee or owner. A copy of the agreement shall be furnished to the Engineer. Contract prices shall include all royalties and costs arising from patents, trademarks and copyrights.

106 CONSTRUCTION EQUIPMENT

In addition to the conditions indicated in the Contract Documents, the following conditions regarding use of equipment in works shall be satisfied:

a) The Contractor shall be required to give a trial run of the equipment for establishing their capability to achieve the laid down Specifications and tolerances to the satisfaction of the Engineer before commencement of the work;

b) All equipment provided shall be of proven efficiency and shall be operated and maintained at all times in a manner acceptable to the Engineer;

c) Plants, equipment and instruments provided shall have adequate sensitivity, facility for calibration to desired level and shall be robust;

d) Plant, equipment and instrument provided shall have data logging arrangement and control systems to enable automatic feedback control of process;

e) Plants, equipment and instruments provided shall have adequate safety features and pollution control devices;

f) Plant, equipment and instruments provided shall be operated by skilled and qualified operators;

g) All the plant/equipment to be deployed on the works shall be got approved from the Engineer for ensuring their fitness and efficiency before commencement of work;

h) Any material or equipment not meeting the approval of the Engineer shall be removed from the site forthwith;

i) No equipment shall be removed from site without permission of the Engineer;

j) The Contractor shall also make available stand by equipment and spare parts; and

k) The Contractor shall also make available equipment for site quality control work as directed by the Engineer.

107 DRAWINGS

107.1 The drawings provided in the Tender Documents shall be used as reference only. The Contractor shall study the nature and type of work and ensure that the rates

and prices quoted by him in the Bill of Quantities have due consideration of the site and complexities of work involved during actual execution/construction.

107.2 The Contractor based on his surveys and investigations, shall submit the working drawings (hard and soft copy) to the Engineer for each activity at least 45 days in advance of the scheduled date to the start of the activity as per his approved work programme. The working drawings shall clearly show the modifications, if any, proposed with reference to corresponding tender drawings. The Engineer shall review the working drawings including the modifications proposed, if any, revise the drawings, if required, approve and issue to the Contractor two copies of Good for Construction (GFC) drawings at least 28 days in advance of the scheduled date of the start of the activity.

107.3 Examination and/or approval by the Engineer of any drawings or other documents submitted by the Contractor shall not relieve the Contractor of his responsibilities or liabilities under the Contract.

107.4 The tendered rates/prices for the work shall be deemed to include the cost of preparation, supply and delivery of all necessary drawings, prints, tracings and negatives which the Contractor is required to provide in accordance with the Contract.

108 SITE INFORMATION

108.1 The information about the site of work and site conditions in the Tender Documents is given in good faith for guidance only but it shall be the responsibility of the Contractor to satisfy himself regarding all aspects of site conditions.

108.2 The location of the works and the general site particulars are as shown in the Site plan/Index plan enclosed with the Tender Documents.

108.3 Whereas the right-of-way to the bridge sites/road works shall be provided to the Contractor by the Employer, the Contractor shall have to make his own arrangement for the land required by him for site offices, field laboratory, site for plants and equipment, maintenance and repair workshop, construction workers' camp, stores etc.

109 SETTING OUT

109.1 The Contractor shall establish working bench marks tied with the Reference bench mark in the area soon after taking possession of the site. The Reference bench mark for the area shall be as indicated in the Contract Documents and the values of the same shall be obtained by the Contractor from the Engineer. The working bench marks shall be at the rate of four per km and also at or near all drainage structures, over-bridges and underpasses. The working bench marks/levels should be got approved from the Engineer. Checks must be made on these bench marks once every month and adjustments, if any, got approved

from the Engineer and recorded. An up-to-date record of all bench marks including approved adjustments, if any, shall be maintained by the Contractor and also a copy supplied to the Engineer for his record.

109.2 The lines and levels of formation, side slopes, drainage works, carriageways and shoulders shall be carefully set out and frequently checked, care being taken to ensure that correct gradients and cross-sections are obtained everywhere.

109.3 In order to facilitate the setting out of the works, the centre line of the carriageway or highway must be accurately established by the Contractor and approved by the Engineer. It must then be accurately referenced in a manner satisfactory to the Engineer, at every 50 m intervals in plain and rolling terrains and 20 m intervals in hilly terrain and in all curve points as directed by the Engineer, with marker pegs and chainage boards set in or near the fence line, and a schedule of reference dimensions shall be prepared and supplied by the Contractor to the Engineer. These markers shall be maintained until the works reach finished formation level and are accepted by the Engineer.

109.4 On construction reaching the formation level stage, the centre line shall again be set out by the Contractor and when approved by the Engineer, shall be accurately referenced in a manner satisfactory to the Engineer by marker pegs set at the outer limits of the formation.

109.5 No reference peg or marker shall be moved or withdrawn without the approval of the Engineer and no earthwork or structural work shall commence until the centre line has been referenced.

109.6 The Contractor will be the sole responsible party for safe-guarding all survey monuments, bench marks, beacons, etc. The Engineer will provide the Contractor with the data necessary for setting out the centre line. All dimensions and levels shown on the drawings or mentioned in documents forming part of or issued under the Contract shall be verified by the Contractor on the site and he shall immediately inform the Engineer of any apparent errors or discrepancies in such dimensions and levels. The Contractor shall, in connection with the staking out of the centre line, survey the terrain along the road and shall submit to the Engineer for his approval, a profile along the road centre line and cross-sections at intervals as required by the Engineer.

The construction staking shall be done by personnel who are trained and experienced in construction layout and staking of the type and kind required in the Contract.

Field notes shall be kept in standard, bound field notebooks as approved by the Engineer. Field notes shall be subject to inspection by the Engineer and shall be the property of the Employer.

The Contractor shall correct any deficient staking or construction work which resulted from inaccuracies in the staking operations or from the Contractor's failure to report inaccuracies in the plans or survey data furnished by the Department.

109.7 After obtaining approval of the Engineer, work on earthwork can commence. The profile and cross-sections as per Section 305, shall form the basis for measurements and payment. The Contractor shall be responsible for ensuring that all the basic traverse points are in place at the commencement of the contract and, if any, are missing, or appear to have been disturbed, the Contractor shall make arrangements to re-establish these points. A "survey File" containing the necessary data will be made available for this purpose. If in the opinion of the Engineer, design modifications of the centre line or grade are advisable, the Engineer will issue detailed instructions to the Contractor and the Contractor shall perform the modifications in the field, as required, and modify the ground levels on the cross-sections accordingly as many times as required.

There will be no separate payment for any survey work performed by the Contractor. The cost of these services shall be considered as being included in the rate of the items of work in the Bill of Quantities.

109.8 Precision automatic levels, having a standard deviation of ±2 mm per km, and fitted with micrometer attachment shall be used for all double run levelling work. Setting out of the road alignment and measurement of angles shall be done by using Total Station with traversing target, having an accuracy of one second. Measurement of distances shall be done preferably using precision instruments like Distomat.

109.9 The work of setting out shall be deemed to be a part of general works preparatory to the execution of work and no separate payment shall be made for the same.

110 PUBLIC UTILITIES

110.1 Drawings scheduling the affected services like water pipes, sewers, oil pipelines, cables, gas ducts etc. owned by various authorities including Public Undertakings and Local Authorities included in the Contract Documents shall be verified by the Contractor for the accuracy of the information prior to the commencement of any work.

The Contractor shall notify all utility agencies who may have installation in the work area and secure their assistance in locating and identifying all utilities before starting any work that may cause any damage to such utilities.

The Contractor shall schedule work in such a manner as to protect existing utility facilities until they are relocated, abandoned or replaced.

The Contractor shall ensure that all utilities encountered within the Right of Way i.e. OFC Cable, telephone, power, water supply, sewerage or any others, remain operational at all

times. Any utility, if damaged, due to construction operation, shall be promptly repaired by the Contractor at his cost.

110.2 Notwithstanding the fact that the information on affected services may not be exhaustive, the final position of these services within the works shall be supposed to have been indicated based on the information furnished by different bodies and to the extent the bodies are familiar with the final proposals. The intermediate stages of the works are, however, unknown at the design stage, these being dictated by the Contractor's methods of working. Accordingly, the Contractor's programme must take into account the period of notice and duration of diversionary works of each body as given on the Drawings and the Contractor must also allow for any effect of these services and alterations upon the Works and for arranging regular meetings with the various bodies at the commencement of the Contract and throughout the period of the Works, the Contractor shall have no objection if the public utility bodies vary their decisions in the execution of their proposals in terms of programme and construction, provided that, in the opinion of the Engineer, the Contractor has received reasonable notice thereof before the relevant alterations are put in hand.

110.3 No removal of or alterations to the utility shall be carried out unless written instructions are issued by the Engineer.

110.4 Any services affected by the Works must be temporarily supported by the Contractor who must also take all measures reasonably required by the various bodies to protect their services and property during the progress of the Works.

110.5 The Contractor may be required to carry out certain works for and on behalf of various bodies, which he shall provide, with the prior approval of the Engineer.

110.6 The work of temporarily supporting and protecting the public utility services during execution of the Works shall be deemed to be part of the Contract and no extra payment shall be made for the same.

110.7 The Contractor shall be responsible to co-ordinate with the service providers for cutting of trees, shifting of utilities, removal of encroachments etc. to make site unencumbered for completion of work. This will include frequent follow-up meetings. Co-ordination for making project site unencumbered shall be deemed to be part of the Contract and no extra payment shall be made for the same.

110.8 In some cases, the Contractor may be required to carry out the removal or shifting of certain services/utilities on specific orders from the Engineer for which payment shall be made to him. Such works, however, shall be taken up by the Contractor only after obtaining clearance from the Engineer and ensuring adequate safety measures.

111 PRECAUTIONS FOR SAFEGUARDING THE ENVIRONMENT

111.1 General

The Contractor shall take all precautions for safeguarding the environment during the course of the construction of the works. He shall abide by all laws, rules and regulations in force governing pollution and environmental protection that are applicable in the area where the works are situated.

111.2 Borrow Pits for Embankment Construction

Borrow pits shall be selected only after testing the suitability of materials for use in construction and shall not normally be dug in the right-of-way of the road. The stipulations in Section 305.2.2 shall govern. The borrow pits shall not be left in a condition likely to cause hazard to human and animal life. The Contractor shall seek prior approval from the concerned authorities for operating the borrow pits.

111.3 Quarry Operations

The Contractor shall obtain materials from quarries only after obtaining the consent of the Mining Department or other concerned authorities. The quarry operations shall be undertaken within the purview of the rules and regulations in force.

111.4 Control of Soil Erosion, Sedimentation and Water Pollution

The Contractor shall carry out the works in such a manner that soil erosion is fully controlled, and sedimentation and pollution of natural water courses, ponds, tanks and reservoirs is avoided. The stipulations in Clause 306 shall govern.

111.5 Pollution from Plants and Batching Plants

Stone crushing and screening plants, Bituminous hot-mix plants, concrete batching plants etc. shall be located sufficiently away from habitation, agricultural operations or industrial establishments. The locations shall be as permissible under the laws governed by local bodies/ administration of the area. The Contractor shall take every precaution to reduce the levels of noise, vibration, dust and emissions from his plants and shall be fully responsible for any claims or damages caused to the owners of property, fields and residences in the vicinity and violation of pollution control norms, if any.

111.6 Substances Hazardous to Health

The Contractor shall not use or generate any materials in the works which are hazardous to

the health of persons, animals or vegetation. Where it is necessary to use some substances which can cause injury to the health of workers, the Contractor shall provide protective clothing or appliances to his workers.

111.7 Use of Nuclear Gauges

Nuclear gauges shall be used only where permitted by the Engineer. The Contractor shall provide the Engineer with a copy of the regulations governing the safe use of nuclear gauges he intends to employ and shall abide by such regulations.

111.8 Environmental Protection

111.8.1 The Contractor must take all reasonable steps to minimize dust nuisance during the construction of the works along the haul roads and the worksites by sprinkling water at a frequency specified by the Engineer.

All existing highways and roads used by vehicles or equipments of the Contractor or any of his sub-contractors or suppliers of materials or plant, and similarly any new roads which are part of the works and which are being used by traffic, shall be kept clean and clear of all dust/mud or other extraneous materials dropped by the said vehicles. Similarly, all dust/ mud or other extraneous materials from the works spreading on these highways shall be immediately cleared by the Contractor.

Clearance shall be effected immediately by sweeping and removal of debris, and all dust, mud and other debris shall be removed entirely from the road surface. Additionally, if so directed by the Engineer, the road surface shall be hosed or watered using suitable equipment.

Damages to existing road: Any structural damage and loss of riding surface caused to the existing roads by the Contractor's construction vehicles/ equipment shall be made good without any extra cost.

Compliance with the foregoing will not relieve the Contractor of any responsibility for complying with the requirements of any authority in respect of the roads used by him.

111.8.2 Air Quality

The Contractor shall device and implements methods of working to minimize dust, gaseous and other air-borne emissions and carry out the Works in such a manner as to minimize adverse impacts on the air quality.

The Contractor shall utilize effective water sprays during delivery, manufacture, processing and handling of materials when dust is likely to be created, and to dampen stored materials during dry and windy weather. Stockpiles of friable materials shall be covered with clean

tarpaulins, with applications of sprayed water during dry and windy weather. Stockpiles of materials or debris shall be dampened prior to their movement, except where this is contrary to the Specification.

Any vehicle with open load-carrying area used for transporting potentially dust-producing material shall have properly fitting side and tail boards. Materials having the potential to produce dust shall not be loaded to a level higher than the side and tail boards and shall be covered with clean tarpaulins in good condition. The tarpaulin shall be properly secured and extend at least 300 mm over the edges of the side and tail boards.

111.8.3 Water Sources and Water Quality

The Contractor shall provide independent sources of water supply, such as bore wells, for use in the Works and for associated storage, workshop and work force compounds. Prior approval shall be obtained from the relevant State Authorities and all installations shall be in compliance with local regulations.

The Contractor shall protect all watercourses, waterways, ditches, canals, drains, lakes, reservoirs and the like from pollution as a result of the execution of the Works. All water and other liquid waste products like petroleum products and chemicals arising on the Site shall be collected and disposed of at a location on or off the Site and in a manner that shall not cause either nuisance or pollution.

The Contractor shall at all times ensure that all existing stream courses and drains within and adjacent to the Site are kept safe and free from any debris and any materials arising from the Works. The Contractor shall not discharge or deposit any matter arising from the execution of the Works into any water course except with the permission of the Engineer and the regulatory authority concerned.

111.8.4 Construction Camps

The construction camps shall conform to the State and National building regulations as applicable. The area for the storage of polluted materials shall be stored on impervious floors and shall be surrounded by impervious ditches in order to avoid spilling of polluted material to surrounding areas.

Construction camps shall be properly arranged to avoid noise pollution to the nearby habitants and to avoid contamination of water courses from wastewater drainage. To prevent such contamination, wastewater generated at the campsites shall be discharged into soak pits. Human excreta shall be treated though septic tanks prior to discharge and shall conform to directives and guidelines of the State. Water accumulated in tyres, empty vessels and containers of all nature will be regularly cleaned to avoid the related health hazards. The Contractor shall provide and maintain in a neat and sanitary condition accommodations for

the use of the employees and workers as may be necessary to comply with the requirements of Central, State, and local regulations.

Spilling of oil and bituminous products during construction and transport shall be avoided to reduce the chances of contamination of surface as well as ground water.

111.9 Occupational Health and Safety of the Workforce

The Contractor shall prepare and submit to the Engineer the Occupational Health & Safety Procedures/Practices for the workforce in all quarry sites, plant sites, work sites, camp sites, etc., in accordance with the applicable laws.

111.10 Control and Disposal of Wastes

The Contractor shall control the disposal of all forms of waste generated by the construction operations and in all associated activities. No uncontrolled deposition or dumping shall be permitted. Wastes to be so controlled shall include, but shall not be limited to, all forms of fuels and engine oils, all types of bitumen, cement, surplus aggregates, gravels, bituminous mixtures etc. The Contractor shall make specific provision for the proper disposal of these and any other waste products, conforming to local regulations and acceptable to the Engineer.

111.11 Transport of Hazardous Materials

Transport of hazardous materials, in bulk or in sealed containers, shall meet the requirements of the State regulations. Prior to ordering transport of hazardous material in bulk, the Contractor must obtain the approval of the relevant authority as well as of the Engineer. The transport of diesel, petrol, gaseous material, chemical and explosives for quarrying shall be governed by safety laws of the local authorities. Precautionary measures and conformity with regulations shall be stated in a Method Statement for the approval of the Engineer. Sealed containers of hazardous materials shall be stored in a well-ventilated room, well guarded and secured.

111.12 Emergency Response

The Contractor shall plan and provide remedial measures to be implemented in the event of occurrence of emergencies such as spillages of oil or bitumen or chemicals, fire. The Contractor shall provide the Engineer with a statement of the measures he intends to implement in the event of such an emergency, which shall include a statement of how he intends to provide personnel adequately trained to implement such measures.

111.13 Measurement for Payment

The compliance of all provisions made in this Clause 111 shall be deemed to be incidental to the work and no separate measurement or payment shall be made. The Contractor shall

be deemed to have made allowance for all such compliance with these provisions in the preparation of his bid for items of work included in the Bill of Quantities and full compensation for such compliance shall be deemed to be covered by the bid price.

112 ARRANGEMENT FOR TRAFFIC DURING CONSTRUCTION

112.1 General

The Contractor shall at all times, carry out work on the highway in a manner creating least interference to the flow of traffic while consistent with the satisfactory execution of the same. For all works involving improvements to the existing highway, the Contractor shall, in accordance with the directives of the Engineer, provide and maintain, during execution of the work, a passage for traffic either along a part of the existing carriageway under improvement or along a temporary diversion constructed close to the highway. Before taking up any construction or maintenance operation, the Contractor shall prepare a Traffic Management Plan for each work zone and submit it to the Engineer for prior approval. This plan should include inter alia:

i) Provision of a qualified safety officer with support staff to serve as a site safety team

ii) Provision of traffic safety devices and road signs in construction zones as per IRC:SP:55 and other relevant IRC Codes and para 112.4:

iii) Safety measures for the workers engaged including personal protection equipment

iv) First aid and emergency response arrangements

v) Details and drawings of arrangements in compliance with other sub Sections of this Section.

112.2 Passage of Traffic along a Part of the Existing Carriageway under Improvement

For widening/strengthening existing carriageway where part width of the existing carriageway is proposed to be used for passage of traffic, treated shoulders shall be provided on the side on which work is not in progress. The treatment to the shoulder shall consist of providing at least 150 mm thick granular (Wet Mix Macadam/Water Bound Macadam) base course covered with bituminous surface dressing in a width of at least 1.5 m and the treated shoulder shall be maintained throughout the period during which traffic uses the same to the satisfaction of the Engineer. The continuous length, in which such work shall be carried out, would be limited normally to 500 m at a place. However, where work is allowed by the Engineer in longer stretches passing places at least 20 m long with additional paved width of 2.5 m shall be provided at every 0.5 km interval.

In case of eccentric widening of existing two-lane to four-lane, the additional two-lanes would be constructed first and the traffic diverted to it and only thereafter the required treatment to the existing carriageway would be carried out. In case of concentric widening, stipulations as in paragraph above shall apply.

After the works are completed, with the approval of the Engineer, the treated shoulder shall be dismantled, the debris disposed of and the area cleared as per the direction of the Engineer.

112.3 Passage of Traffic along a Temporary Diversion

In stretches where it is not possible to pass the traffic on part width of the carriageway, a temporary diversion shall be constructed with 7 m carriageway and 2.5 m earthen shoulders on each side (total width of roadway 12 m) with the following provision for road crust in the 7 m width:

i) Earthwork

ii) 200 mm (compacted) granular sub-base

iii) 225 mm (compacted) granular base course

iv) Priming and Tack Coat and

v) Premix carpet with Seal Coat/Mix Seal Surfacing

The location of such stretch, alignment and longitudinal section of diversion including junctions and temporary cross drainage provision shall be as approved by the Engineer.

112.4 Traffic Safety and Control

The Contractor shall take all necessary measures for the safety of traffic during construction and provide, erect and maintain such barricades, including signs, marking, flags, lights and flagmen as per the traffic management plan submitted by the Contractor and approved by the Engineer, referred to in Sub-Section 112.1. Before taking up any construction, an agreed phased programme for the diversion of traffic on the highway shall be drawn up in consultation with the Engineer.

All construction equipment working or parked on or within the traffic lanes or shoulders under "Traffic maintained" conditions shall be equipped with flashing yellow beacons.

The Contractor shall conduct all operations to minimize any drop-offs (abrupt changes in roadway) exposed to traffic. Drop-offs in the travelled way shall be protected by a wedge of compacted stable material capable of carrying traffic (the wedge being 1 vertical to 4 horizontal or flatter).

The Engineer shall authorize other methods, to protect drop-offs when conditions do not allow a wedge of compacted, stable material.

Warning signs, barricades, warning lights, and all other traffic control devices shall not be removed if the hazard has not been eliminated. Only upon receipt of specific written authorization from the Engineer, the Contractor may remove or cease to maintain warning signs, barricades, warning lights, and all other traffic control devices.

The barricades erected on either side of the carriageway/portion of the carriageway closed to traffic, shall be of strong design to resist violation, and painted with alternate black and white stripes. Red lanterns or warning lights of similar type shall be mounted on the barricades at night and kept lit throughout from sunset to sunrise.

At the points where traffic is to deviate from its normal path (whether on temporary diversion or part width of the carriageway) the channel for traffic shall be clearly marked with the aid of pavement markings, painted drums or a similar device to the directions of the Engineer. At night, the passage shall be delineated with lanterns or other suitable light source including solar energy bulbs.

One-way traffic operation shall be established whenever the traffic is to be passed over part of the carriageway inadequate for two-lane traffic. This shall be done with the help of temporary traffic signals or flagmen kept positioned on opposite sides during all hours. For regulation of traffic, the flagmen shall be equipped with red and green flags and lanterns/lights.

On both sides, suitable regulatory/warning signs as approved by the Engineer shall be installed for the guidance of road users. On each approach, at least two signs shall be put up, one close to the point where transition of carriageway begins and the other 120 m away. The signs shall be of approved design and of reflective type, as directed by the Engineer.

112.5 Maintenance of Diversions and Traffic Control Devices

Signs, lights, barriers and other traffic control devices, adequate lighting and other arrangements, as well as the riding surface of diversions and treated shoulders shall be maintained in a satisfactory condition till such time they are required and as directed by the Engineer. The temporary travelled way shall be kept free of dust by frequent applications of water, if necessary.

112.6 Measurements for Payment and Rate

All arrangements, as contained in this Section 112 for safety of road users, during construction including provision of temporary diversions/temporary cross drainage structures/treated shoulders shall be measured and paid as per the BOQ. However their maintenance, dismantling and clearing debris shall be considered as incidental to the Works and shall not be paid separately.

113 GENERAL RULES FOR THE MEASUREMENT OF WORKS FOR PAYMENT

113.1 General

All measurements shall be made in the metric system. Different items of work shall be measured in accordance with the procedures set forth in the relevant Sections read in conjunction with the General Conditions of Contract. The same shall not, however, apply in the case of lumpsum contracts.

All measurements and computations, unless otherwise indicated, shall be carried nearest to the following limits:

i)	length and width	10 mm
ii)	height, depth or thickness of	
	a) earthwork, subgrade,	5 mm
	b) sub-bases, bases, surfacing	5 mm
iii)	structural members	2.5 mm
iv)	areas	0.01 sq.m
v)	volume	0.01 cu.m

In recording dimensions of work, the sequence of length, width and height or depth or thickness shall be followed.

113.2 Measurement of Lead for Materials

Where lead is specified in the Contract for construction materials, the same shall be measured as described hereunder:

Lead shall be measured over the shortest practicable route and not the one actually taken and the decision of the Engineer in this regard shall be taken as final. Distances upto and including 100 m shall be measured in units of 50 m, exceeding 100 m but not exceeding 1 km in units of 100 m and exceeding 1 km in units of 500 m, the half and greater than half of the unit shall be reckoned as one and less than half of the unit ignored. In this regard, the source of the material shall be divided into suitable blocks and for each block, the distance from the centre of placing pertaining to that block shall be taken as the lead distance.

113.3 Measurement of Pavement Thickness for Payment on Volume Basis

The finished thickness of sub-bases, base and bituminous layers and concrete courses to be

paid on volume basis shall be computed in the following manner:

Levels shall be taken before and after construction, at the grid of points 10 m centre-to-centre longitudinally in straight reaches and 5 m centre-to-centre at curves. Normally, on two-lane roads, the levels shall be taken at four positions transversely, at 0.75 m and 2.75 m from either edge of the carriageway and on single-lane roads, these shall be taken at two positions transversely, being at 1.25 m from either edge of the carriageway. For multi-lane roads, levels shall be taken at two positions transversely for each lane. The transverse position for levels shall be 0.75 m from either edge of the carriageway and the remaining locations shall be at equi-distance in the balance portion of carriageway. For paved shoulder an additional level shall be taken at the centre of the shoulder.

Suitable references for the transverse grid lines should be left in the form of embedded bricks on both ends or by other means so that it is possible to locate the grid points for level measurements after each successive course is laid.

For pavement courses laid only over widening portions, at least one line of levels shall be taken on each strip of widening, or more depending on the width of widening as decided by the Engineer.

Notwithstanding the above, the measurements may be taken at closer intervals also, if so desired by the Engineer, the need for which may arise particularly in the case of estimation of the volume of the material for profile corrective course (levelling course). The average thickness of the pavement course in any area shall be the arithmetic mean of the difference of levels before and after construction at all the grid points falling in that area, provided that the thickness of finished work shall be limited to those shown on the drawings or approved by the engineer in writing.

As supplement to level measurements, the Engineer shall have the option to take cores/ make holes to check the depth of construction. The holes made and the portions cut for taking cores shall be made good by the Contractor by laying fresh mix/material including compacting as required at his-own cost immediately after the measurements are recorded.

113.4 Checking of Pavement Thickness for Payment on Area Basis

Where payment for any bituminous course in Section 500 is allowed to be made on the area basis, the Engineer may have its thickness checked with the help of a suitable penetration gauge at regular intervals or other means as he may decide.

113.5 Measurement of Bituminous Courses for Payment on Weight Basis

Plant-mixed bituminous materials for pavement courses, where specifically designated in the contract to be paid on weight basis, shall be weighed on accurate scales approved by the Engineer. Approved scales shall mean scales that are of size, capacity, kind and type suitable for the weighing to be done, and these shall be properly installed and maintained. Prior to

the use of the scales and as frequently thereafter as the Engineer may deem necessary to ensure accuracy, the scales shall be checked and approved by the Engineer, or the Engineer may direct the Contractor to have the scales checked by other competent agency at the cost of the Contractor.

Location of the scales shall be as designated by the Engineer. Trucks used for hauling the material to be weighed shall be weighed empty daily at such times as the Engineer directs, and each truck shall bear a plainly legible identification mark.

For materials specified to be measured by weight, the Engineer will have the option to make measurements of the finished work by volume in accordance with Section 113.3 and such volumes shall be converted into weight for payment purposes. The factor for conversion from volume measurement to weight measurement shall be computed from the representative density of the compacted material at site determined at locations approved by the Engineer.

114 SCOPE OF RATES FOR DIFFERENT ITEMS OF WORK

114.1 For item rate contracts, the contract unit rates for different items of work shall be payment in full for completing the work to the requirements of the Specifications including full compensation for all the operations detailed in the relevant Sections of these Specifications under "Rates". In the absence of any directions to the contrary, the rates are to be considered as the full inclusive rate for finished work covering all labour, materials, wastage, temporary work, plant, equipment, over-head charges and profit as well as the general liabilities, performance of other obligations, insurance and risks arising out of the Conditions of Contract.

114.2 The item rates quoted by the Contractor shall, unless otherwise specified, also include compliance with/supply of the following:

i) General works such as setting out, clearance of site before setting out and clearance of works after completion;

ii) A detailed programme using modern project management software for the construction and completion of the work giving, in addition to construction activities, detailed network activities for the submission and approval of materials, procurement of critical materials and equipment, fabrication of special products/equipment and their installation and testing, for all activities of the Engineer/Employer that are likely to affect the progress of work, etc., including updating of all such activities on the basis of the decisions taken at the periodic site review meetings or as directed by the Engineer;

iii) Samples of various materials proposed to be used on the Works for conducting tests thereon as required as per the provisions of the Contract;

iv) Design of mixes as per the relevant Sections of the Specifications giving proportions of ingredients, sources of aggregates and binder along with accompanying trial mixes as per the relevant Sections of these Specifications to the submitted to the Engineer for his approval before use on the Works;

v) Cost of laying trial stretches;

vi) Detailed drawings as per Clause 107.

vii) Detailed design calculations and drawings for all Temporary Works (such as form-work, staging, centreing, specialized constructional handling and launching equipment and the like);

viii) Detailed drawings for templates, support and end anchorage, details for pre-stressing cable profiles, bar bending and cutting schedules for reinforcement, material lists for fabrication of structural steel, etc.;

ix) Mill test reports for all mild and high tensile steel and cast steel as per the relevant provisions of the Specifications;

x) Testing of various finished items and materials including bitumen, cement, concrete, bearings as required under these Specifications and furnishing test reports/certificates;

xi) Inspection Reports in respect of formwork, staging, reinforcement and other items of work as per the relevant Specifications;

xii) Any other data which may be required as per these Specifications or the Conditions of Contract or any other annexures/schedules forming part of the Contract;

xiii) Any other item incidental to work which is necessary for complying with the provisions of the Contract;

xiv) All temporary works, formwork and false work not included as separate item in the BOQ;

xv) Establishing and running a laboratory with facilities for testing for various items or works as specified in Section 900 and other relevant Sections;

xvi) Cost of in-built provisions for Quality Assurance;

xvii) Cost of safeguarding the environment; and

xviii) Cost of providing "as-built drawings" in original and two sets of prints.

114.3 Portions of road works beyond the limits and/or any other work may be got constructed by the Employer directly through other agencies. Accordingly, other agencies employed by the Employer may be working in the vicinity of the Works being executed by the Contractor. The Contractor shall liaise with such agencies and adjust his construction

programme for the completion of work accordingly and no claim or compensation due to any reason whatsoever will be entertained on this account. The Employer will be indemnified by the Contractor for any claims from other agencies on this account.

115 METHODOLOGY AND SEQUENCE OF WORK

115.1 Prior to start of the construction activities at site, the Contractor shall, within 28 days after the date of the agreement unless otherwise stipulated in the Contract, submit to the Engineer for approval, the detailed method statement. The method statement shall be submitted in two parts.

115.2 The general part of the method statement shall describe the Contractor's proposals regarding preliminary works, common facilities and other items that require consideration at the early stage of the contract. The general part shall include information on:

a) Sources of materials like coarse aggregates and fine aggregates, quantity and quality of materials available in different sources;

b) Sources of manufactured materials like bitumen, cement, steel reinforcement, pre-stressing strands and bearings etc. He shall also submit samples/test certificates of materials for consideration of the Engineer;

c) Locations of the site facilities such as batching plant, hot mix plant, crushing plant, etc.;

d) Details of facilities available for transportation of men/material and equipment;

e) Information on procedure to be adopted by the Contractor for prevention and mitigation of negative environmental impact due to construction activities;

f) Safety and traffic arrangement during construction;

g) Implementation of activities provided in the Environmental Management Plan;

h) Any other information required by the Engineer.

The general part of the QA programme under Section 105.3 shall accompany the method statement.

115.3 Special part of the method statement shall be submitted to the Engineer by the Contractor for each important item of work as directed by the Engineer. The statement

shall be submitted at least 4 weeks in advance of the commencement of the activity of item of work unless otherwise stipulated in the contract. The statement shall give information on:

a) Details of the personnel both for execution and quality control of the work;

b) Equipment deployment with details of the number of units, capacity, standby arrangement;

c) Sequence of construction and details of temporary or enabling works like diversion, cofferdam, formwork including specialized formwork for superstructure, details of borrow areas, method of construction of embankment, sub-grade and pavement, pile concreting, proprietary processes and products and equipments to be deployed. Wherever required technical literature, design calculations and drawings shall be included in the method statement;

d) Testing and acceptance procedure including documentation;

e) The special part of the QA programme under Sub-Section 105.3 for the particular item of work shall accompany the method statement for the concerned activity.

The Engineer shall examine and approve the method statement with the required modifications. The modified method statement if required shall be submitted within 14 days of the receipt of the Engineer's approval. The sole responsibility for adequacy and safety of the method adopted by the Contractor shall rest on the Contractor irrespective of any approval given by the Engineer.

115.4 Approval of Proprietary Products/Processes/Systems

Within 90 days of the signing of agreement, the Contractor shall submit the following information for all proprietary products, process or any other item proposed to be used in the work, for approval of the Engineer.

a) Name of the manufacturer and name of the product/process/ system along with authenticated copies of the license/collaboration agreement;

b) General features of the product/process/system;

c) Details of the product development and development testing;

d) Acceptance test and criteria;

e) Installation procedure;

f) Maintenance procedure and schedule;

g) Warranty proposal.

The Engineer may order additional test for the purpose of acceptance. Additional charges for test, if any, for the product/process/system shall be borne by the Contractor.

116 CRUSHED STONE AGGREGATES

Where the terms crushed gravel/shingle, crushed stone, broken stone or stone aggregate appear in any part of the Contract Documents or Drawings issued for work, they refer to crushed gravel/crushed shingle/crushed stone aggregate obtained from integrated crushing plant having appropriate primary crusher, secondary cone crusher, vertical shaft impactor and vibratory screen unless specified otherwise. Stone retained on 4.75 mm sieve shall have at least two faces fractured.

117 SUPPLY OF QUARRY SAMPLES

Raw and processed samples of the mineral aggregates from the approved quarry shall be submitted by the Contractor at his cost.

118 APPROVAL OF MATERIALS

Approval of all sources of material for work shall be obtained in writing from the Engineer before their use on the works.

119 USE OF SURFACES BY TRAFFIC

119.1 Ordinarily, no construction traffic shall be allowed on pavement under construction unless authorized by the Engineer. Even in that case, the load and intensity of construction traffic should be so regulated that no damage is caused to the sub-grade or pavement layers already constructed. Where necessary, service roads shall be constructed for this purpose and the same shall be considered as incidental to the work.

119.2 The wheels or the tracks of plant moving over the various pavement courses shall be kept free of deleterious materials.

119.3 Bituminous base course shall be kept clean and uncontaminated as long as the same remains uncovered by a wearing course or surface treatment. The only traffic permitted access to the base/binder course shall be that engaged in laying and compacting the wearing course or that engaged on such surface treatment where the base/binder course is to be blinded and/or surface dressed. Should the base/binder course or tack coat on the base/binder course become contaminated, the Contractor shall make good by cleaning it to the satisfaction of the Engineer, and if this is impracticable, by removing the layer and replacing it to Specifications without any extra cost to the employer.

119.4 On Dry Lean Concrete sub-base, no heavy commercial vehicles like trucks and buses shall be permitted after its construction. Light vehicles, if unavoidable, may, however, be allowed after 7 days of its construction with prior approval of the Engineer. No vehicular traffic, shall be allowed on a finished concrete pavement for a period of 28 days of its construction and until the joints are permanently sealed and cured.

120 FIELD LABORATORY

120.1 Scope

The work covers the provision and maintenance of an adequately equipped field laboratory as required for site control on the quality of materials and the works.

120.2 Description

The Contractor shall arrange to provide fully furnished and adequately equipped field laboratory. The field laboratory shall preferably be located adjacent to the site office of the Engineer and provided with amenities like water supply, electric supply etc. as for the site office of the Engineer as described in this Section.

The layout and size of the field laboratory shall be as indicated in the drawings. In case no drawings is furnished, the laboratory shall include space for the storage of samples, equipment, laboratory tables and cupboards, working space for carrying out various laboratory tests, a wash basin, toilet facility and a curing tank for the curing of samples, around 4 m x 2 m x 1 m in size and a fume charnber. Wooden/concrete working table with a working platform area of about 1 m x 10 m shall be provided against the walls. Wooden cupboards above and below the working tables shall be provided to store accessories such as, sample moulds etc. At least 4 racks of slotted angles and M.S. sheets the size 1800 mm x 900 mm x 375 mm and at least 6 stools for laboratory test operators shall also be provided.

The items of laboratory equipment shall be provided in the field laboratory depending upon the items to be executed as per Table 100-2.

120.3 Ownership

The field laboratory building and equipment shall be the property of the Contractor. The Employer and the Engineer shall have free access to the laboratory.

120.4 Maintenance

The Contractor shall arrange to maintain the field laboratory in a satisfactory manner until the issue of Taking Over Certificate for the completed work. Maintenance includes all activities described in Section 120.4.

Table 100-2 : List of Laboratory Equipments

Sl. No	Name of the Project		Number
A)	**GENERAL**		
1)	Weigh Balances		
	a)	5 – 20 kg capacity Electronic type – Accuracy 1 gm	1 No.
	b)	500 gm capacity–Electronic Type Accuracy 0.01 gm	1 No.
	c)	Electronic 5 kg capacity Accuracy 0.5 gm	1 No.
	d)	Platform Balance scale-300 kg capacity	1 No.
	e)	Chemicial Balance 100 gm capacity-accuracy 0.001 gm	--
2)	Oven-electrically operated, thermostatically controlled (including thermometer), stainless steel interior		
	From 0°C to 220°C Sensitivity 1°C		1 No
3)	Sieves : as per IS:460-1962		
	a)	I.S. sieves 450 mm internal dia of sieve sets as per BIS of required sieve sizes complete with lid and pan	1 set
	b)	IS sieve 200 mm internal dia (brass frame and steel/or brass wire cloth mesh) consisting of sieve sets of required sieve sizes complete with lid	2 sets
4)	Sieve shaker capable of aking 200 mm and 450 mm dia sieves-electrically operated with time switch		1 No
5)	200 tonnes compression testing machine		1 No
6)	Stop watches 1/5 sec. accuracy		1 No
7)	Glassware comprising beakers, pipettes, dishes, measuring cylinders (100 to 1000 cc capacity) glass rods and funnels, glass thermometers range 0°C to 100°C and metallic thermometers range up to 300°C.		2 No. each
8)	Hot plates 200 mm dia (1500 watt.)		1 No
9)	Enamel trays		
	a) 600 mm x 450 mm x 50 mm		2 Nos
	b) 450 mm x 300 mm x 40 mm		2 Nos
	c) 300 mm x 250 mm x 40 mm		2 Nos
	d) Circular plates of 250 mm dia		2 Nos
10)	Water Testing Kit		1 No
B)	**FOR SOILS**		
1)	Water still		–
2)	Liquid limit device with ASTM grooving tools as per IS:2720		1 No
3)	Sampling pipettes fitted with pressure and suction inlets, 10 ml. Capacity		1 set

Sl. No	Name of the Project		Number
4)	Compaction apparatus (Proctor) as per IS:2720 (Part 7) complete with collar, base plate and hammer and all other accessories		1 No
5)	Modified AASHTO Compaction apparatus as per IS:2720 (Part 8) 1974 or Heavy Compaction Apparatus as per IS complete with collar, base plate hammer and all other accessories		1 No
6)	Sand pouring cylinder with conical funnel and tap and complete as per IS:2720 (Part 28) 1974 including modern equipment.		2 Nos
7)	Ennore Standard Sand		As required
8)	Sampling tins with lids 100 mm dia x 75 mm ht. ½ kg capacity and miscellaneous items like moisture tins with lid 50 grams etc.		4 Nos
9)	Lab CBR testing equipment for conducting CBR testing, load frame with 5 Tonne capacity, electrically operated with speed control as per IS:2720 (Part 16) and consisting of following:		1 Set
	a)	CBR moulds 150 mm dia – 175 mm ht.	6 No
	b)	Tripod stands for holding dial gauge holder	4 Nos
	c)	CBR plunger with settlement dial gauge holder	1 No
	d)	Surcharge weight 147 mm dia 2.5 kg wt.	6 Nos
	e)	Spacers disc 148 mm dia 47.7 mm ht. With handle	2 Nos
	f)	Perforated plate (Brass)	2 Nos
	g)	Soaking tank for accommodating 6 CBR moulds	2 Nos
	h)	Proving rings of 1000 kg, 2500 kg capacity	1 No each
	i)	Dial gauges 25 mm travel – 0.01 mm/division	2 No
10)	Standard penetration test equipment		1 No
11)	Nuclear moisture Density meter or equivalent		–
12)	Speedy moisture meter complete with chemicals		1 No
13)	Unconfined Compression Test Apparatus		1 No
C)	**FOR BITUMEN AND BITUMINOUS MIXES**		
1)	Constant temperature bath for accommodating bitumen test specimen, electrically operated, and thermostatically controlled (to accommodate minimum six Specimens)		1 No
2)	Penetrometer automatic type, including adjustable weight arrangement and needles as per IS:1203-1958		1 No
3)	Soxhlet extraction or centrifuge type apparatus complete with extraction thimbles with solvent and filter paper		1 No
4)	Bitumen laboratory mixer including required accessories (20 ltrs.)		1 No

Sl. No	Name of the Project	Number
5)	Marshall compaction apparatus automatically operated as per ASTM 1559-62 T complete with accessories (with 180 N Marshall Moulds)	1 set
6)	Furol viscometer	1 No
7)	Ductility meter	1 No
8)	Softening point (Ring and ball app)	1 No
9)	Distant reading thermometer	–
10)	Rifle box	– 1 No
11)	Automatic Asphlat content Meter	– 1 No
12)	Thin film over test apparatus for modified binder either with PMB or CRMB	–
13)	Mastic Asphalt Hardness testing equipment	–
14)	Sand Equivalent test apparatus	1 set
15)	Core cutting machine suitable for upto 150 mm dia core	1 set
16)	Thermometers	4 Nos
D)	**FOR CEMENT, CEMENT CONCRETE AND MATERIALS**	
1)	Water still	1 No
2)	Vicat needle apparatus for setting time with plungers as per IS:269-1967	1 No
3)	Moulds	
	a)150 mm x 300 mm ht. Cylinder with capping component along with the capping set and compound as per IS	As req
	b) Cube 150 mm, and 100 mm (each size)	As req
4)	Concrete permeability apparatus	–
5)	High frequency mortar cube vibrator for cement testing	–
6)	Concrete mixer power driven, 1 cu.ft. capacity	–
7)	Variable frequency and amplitude vibrating table size 1 m x 1 m as per the relevant British Standard	–
8)	Flakiness index test apparatus	1 No
9)	Aggregate impact test apparatus as per IS:2386 (Part 4) 1963	1 No
10)	Los-angeles abrasion test apparatus as per IS:2386 (Part 4) 1963	1 No
11)	Flow table as per IS:712-1973	–
12)	Equipment for slump test	1 No
13)	Equipment for determination of specific gravity or fine and coarse aggregate as per IS:2386 (Part 3) 1963	1 No
14)	Compression and Flexural strength testing achine of 200 T capacity with additional dial for flexural testing	1 No
15)	Core cutting machine with 10 cm dia diamond cutting edge	1 no
16)	Needle vibrator	2 Nos

Sl. No	Name of the Project	Number
17)	Air entrainment meter	–
18)	0.5 Cft, 1 Cft cylinder for checking bulk density of aggregate with tamping rod	As req
19)	Soundness testing apparatus for cement (Lee chattlier)	1 set
E)	**FOR CONTROL OF PROFILE AND SURFACE EVENNESS**	
1)	Total Station	1 No
2)	Precision automatic level with micrometer attachment	1 set
3)	Distomat or equivalent	1 set
4)	Theodolite – Electronically operated with computerised output attachment	1 set
5)	Precision staff	2 sets
6)	3 meter straight edge and measuring wedge	1 set
7)	Camber template 2 Lane	
	a) Crown type cross-section	1 set
	b) Straight run cross-section	2 sets
8)	Steel tape	
	a) 5 m long	2 Nos
	b) 10 m long	2 Nos
	c) 20 m long	2 Nos
	d) 30 m long	2 Nos
	e) 50 m long	1 No
9)	Roughometer (Bump Integrator)	1 No. (when required)

Note : The items and their numbers listed above in this Section are indicative and shall be decided by the Engineer as per requirements of the Project and modified accordingly.

120.5 Rate

Provision and maintenance of the field laboratory is not a payable item as it is incidental to the work.

121 SUPPLY OF PROJECT RECORD

121.1 Scope

The work covers the supply digital record of project events in digital format (DVD/Flash Drive) including coloured photographs both in digital format as well as mounted on albums to serve as a permanent record of the work needed for an authentic documentation, as approved by the Engineer.

121.2 Description

The Contractor shall provide the following project records in digital format (DVD/Flash Drive) as directed by the Engineer :

i) Record of work in each workfront : It shall cover the status of each workfront before start of work, during various stages of construction and after completion duly including the arrangements made (day & night) for traffic during construction (This shall be need based or as directed by the Engineer);

ii) Record of quarry sites, plant sites, camp sites including labour camps, haul roads, access roads, etc. on quarterly basis;

iii) Record of all accidents on project road/various sites (quarry, plant, camp, etc.)

The record shall be taken by a professional with a digital camera capable of taking still as well as video images having the facility to record the date and the background commentary. The Contractor shall keep separate discs/drives, one with the Engineer and the other with the Employer and update the data in these discs/drives on monthly basis. Separately, a video (in digital format) of maximum one hour duration covering interesting and novel features of the work duly editing the above master disc/drive shall also be maintained, one copy each kept with the Engineer and the Employer and updated on monthly basis. All recording shall be done in the presence of the Engineer's Representative who will certify in writing the recording.

121.3 Measurements for Payment

Supply of two copies of all digital records as above and colour record photographs both in digital format as well as mounted in the albums project shall be measured as one item for the project.

Supply of additional prints of colour record photograph if requested shall be measured in number of additional prints supplied.

The supply of "as-built" drawings in digital format and in hard copies is incidental to the work and shall not be a payable item.

121.4 Rate

Supply of project record in digital format in two copies (one for the Engineer and the other for the Employer) including video recordings updated on monthly basis throughout the construction period shall be measured as one single item.

200

SITE CLEARANCE

201 CLEARING AND GRUBBING

201.1 Scope

This work shall consist of cutting, removing and disposing of all materials such as trees, bushes, shrubs, stumps, roots, grass, weeds, rubbish, top organic soil, etc. to an average depth of 150 mm in thickness, which in the opinion of the Engineer are unsuitable for incorporation in the works, from the area of road land containing road embankment, drains, cross-drainage structures and such other areas as may be specified on the drawings or by the Engineer. It shall include necessary excavation, backfilling of pits resulting from uprooting of trees and stumps to required compaction, handling, salvaging, and disposal of cleared materials with all leads and lifts. Clearing and grubbing shall be performed in advance of earthwork operations and in accordance with the requirements of these Specifications.

201.2 Preservation of Property/Amenities

Roadside trees, shrubs, any other plants, pole lines, fences, signs, monuments, buildings, pipelines, sewers and all highway facilities within or adjacent to the highway which are not to be disturbed shall be protected from injury or damage. The Contractor shall provide and install at his own cost, suitable safeguards approved by the Engineer for this purpose.

During clearing and grubbing, the Contractor shall take all adequate precautions against soil erosion, water pollution, etc., and where required, undertake additional works to that effect vide Clause 306. Before start of operations, the Contractor shall submit to the Engineer for approval, his work plan including the procedure to be followed for disposal of waste materials, etc., and the schedules for carrying out temporary and permanent erosion control works as stipulated in Clause 306.3.

201.3 Methods, Tools and Equipment

Only such methods, tools and equipment as are approved by the Engineer and which will not affect any property to be preserved shall be adopted for the Work. If the area has thick vegetation/roots/trees, a crawler or pneumatic tyred dozer of adequate capacity may be used for clearance purposes. The dozer shall have ripper attachments for removal of tree stumps. All trees, stumps, etc., falling within excavation and fill lines shall be cut to such depth below ground level that in no case these fall within 500 mm of the bottom of the subgrade. Also, all vegetation such as roots, under-growth, grass and other deleterious matter unsuitable for incorporation in the embankment/subgrade shall be removed between fill lines to the satisfaction of the Engineer. All branches of trees extending above the roadway shall be trimmed as directed by the Engineer.

All excavations below the general ground level arising out of the removal of trees, stumps, etc., shall be filled with suitable material and compacted thoroughly so as to make the surface at these points conform to the surrounding area.

Ant-hills both above and below the ground, as are liable to collapse and obstruct free subsoil water flow shall be removed and their workings, which may extend to several metres, shall be suitably treated.

201.4 Disposal of Materials

All materials arising from clearing and grubbing operations shall be taken over and shall be disposed of by the Contractor at suitable disposal sites with all leads and lifts. The disposal shall be in accordance with local, State and Central regulations

201.5 Measurements for Payment

Clearing and grubbing for road embankment, drains and cross-drainage structures shall be measured on area basis in terms of hectares. Cutting of trees upto 300 mm in girth and removal of their stumps, including removal of stumps upto 300 mm in girth left over after trees have been cut by any other agency, and trimming of branches of trees extending above the roadway and backfilling to the required compaction shall be considered incidental to the clearing and grubbing operations. Clearing and grubbing of borrow areas shall be deemed to be a part of works preparatory to embankment construction and shall be deemed to have been included in the rates quoted for the embankment construction item and no separate payment shall be made for the same.

Ground levels shall be taken prior to and after clearing and grubbing. Levels taken prior to clearing and grubbing shall be the base level and will be accordingly used for assessing the depth of clearing and grubbing and computation of quantity of any unsuitable material which is required to be removed. The levels taken subsequent to clearing and grubbing shall be the base level for computation of earthwork for embankment.

Cutting of trees, excluding removal of stumps and roots of trees of girth above 300 mm shall be measured in terms of number according to the girth sizes given below :-

i) Above 300 mm to 600 mm
ii) Above 600 mm to 900 mm
iii) Above 900 mm to 1800 mm
iv) Above 1800 mm

Removal of stumps and roots including backfilling with suitable material to required compaction shall be a separate item and shall be measured in terms of number according to the sizes given below:-

i) Above 300 mm to 600 mm
ii) Above 600 mm to 900 mm
iii) Above 900 mm to 1800 mm
iv) Above 1800 mm

For the purpose of cutting of trees and removal of roots and stumps, the girth shall be measured at a height of 1 m above ground or at the top of the stump if the height of the stump is less than one metre from the ground.

201.6 Rates

201.6.1 The Contract unit rates for the various items of clearing and grubbing shall be payment in full for carrying out the required operations including full compensation for all labour, materials, tools, equipment and incidentals necessary to complete the work. These will also include removal of stumps of trees less than 300 mm girth excavation and back-filling to required density, where necessary, and handling, giving credit towards salvage value disposing of the cleared materials with all lifts and leads. Clearing and grubbing done in excess of 150 mm by the Contractor shall be made good by the Contractor at his own cost as per Clause 301.3.3 to the satisfaction of the Engineer prior to taking up earthwork. Where clearing and grubbing is to be done to a level beyond 150 mm, due to site considerations, as directed by the Engineer, the extra quantity shall be measured and paid separately.

201.6.2 The Contract unit rate for cutting trees of girth above 300 mm shall include handling, giving credit towards salvage value disposing of the cleared materials with all lifts and leads.

201.6.3 The Contract unit rate for removal of stumps and roots of trees girth above 300 mm shall include excavation and backfilling with suitable material to required compaction, handling, giving credit towards salvage value disposing of the cleared materials with all lifts and leads.

201.6.4 The Contract unit rate is deemed to include credit towards value of usable materials, salvage value of unusable materials and off-set price of cut trees and stumps belonging to the Forest Department. The off-set price of cut trees and stumps belonging to the Forest Department shall be deducted from the amount due to the Contractor and deposited with the State Forest Department. In case the cut trees and stumps are required to be deposited with the Forest Department the Contractor shall do so and no deduction towards the off-set price shall be effected. The offset price shall be as per guidelines / estimates of the State Forest Department.

201.6.5 Where a Contract does not include separate items of clearing and grubbing, the same shall be considered incidental to the earthwork items and the Contract unit prices for the same shall be considered as including clearing and grubbing operations.

202 DISMANTLING CULVERTS, BRIDGES AND OTHER STRUCTURES/ PAVEMENTS

202.1 Scope

This work shall consist of dismantling and removing existing culverts, bridges, pavements,

kerbs and other structures like guard-rails, fences, utility services, manholes, catch basins, inlets, etc., from the right of way which in the opinion of the Engineer interfere with the construction of road or are not suitable to remain in place, disposing of the surplus/unsuitable materials and backfilling to after the required compaction as directed by the Engineer.

Existing culverts, bridges, pavements and other structures which are within the highway and which are designated for removal, shall be removed upto the limit and extent specified in the drawings or as indicated by the Engineer.

Dismantling and removal operations shall be carried out with such equipment and in such a manner as to leave undisturbed, adjacent pavement, structures and any other work to be left in place.

All operations necessary for the removal of any existing structure which might endanger new construction shall be completed prior to the start of new work.

202.2 Dismantling Culverts and Bridges

The structures shall be dismantled carefully and the resulting materials so removed as not to cause any damage to the part of the structure to be retained and any other properties or structures nearby.

Unless otherwise specified, the superstructure portion of culverts/bridges shall be entirely removed and other parts removed up to at least 600 mm below the sub-grade, slope face or original ground level whichever is the lowest or as necessary depending upon the interference they cause to the new construction. Removal of overlying or adjacent material, if required in connection with the dismantling of the structures, shall be incidental to this item.

Where existing culverts/bridges are to be extended or otherwise incorporated in the new work, only such part or parts of the existing structure shall be removed as are necessary and directed by the Engineer to provide a proper connection with the new work. The connecting edges shall be cut, chipped and trimmed to the required lines and grades without weakening or damaging any part of the structure to be retained. Due care should be taken to ensure that reinforcing bars which are to be left in place so as to project into the new work as dowels or ties are not injured during removal of concrete.

Pipe culverts shall be carefully removed in such a manner as to avoid damage to the pipes.

Steel structures shall, unless otherwise provided, be carefully dismantled in such a manner as to avoid damage to members thereof. If specified in the drawings or directed by the Engineer that the structure is to be removed in a condition suitable for re-erection, all members shall be match-marked by the Contractor with white lead paint before dismantling; end pins, nuts, loose plates, etc. shall be similarly marked to indicate their proper location; all pins, pin holes

and machined surfaces shall be painted with a mixture of white lead and tallow and all loose parts shall be securely wired to adjacent members or packed in boxes.

Timber structures shall be removed in such a manner as to avoid damage to such timber or lumber having salvage value as is designated by the Engineer.

202.3 Dismantling Pavements and Other Structures

In removing pavements, kerbs, gutters, and other structures like guard-rails, fences, manholes, catch basins, inlets, etc., where portions of the existing construction are to be left in the finished work, the same shall be removed to an existing joint or cut and chipped to a true line with a face perpendicular to the surface of the existing structure. Sufficient removal shall be made to provide for proper grades and connections with the new work as directed by the Engineer.

All concrete pavements, base courses in carriageway and shoulders etc., designated for removal shall be broken to pieces whose volume shall not exceed 0.02 cu.m and used with the approval of the Engineer or disposed of.

202.4 Back-filling

Holes and depressions caused by dismantling operations shall be backfilled with excavated or other approved materials and compacted to required density as directed by the Engineer.

202.5 Disposal of Materials

All surplus materials shall be taken over by the Contractor which may either be re-used with the approval of the Engineer or disposed of with all leads and lifts.

202.6 Measurements for Payment

The work of dismantling shall be paid for in units indicated below by taking measurements before and after, as applicable:

i)	Dismantling brick/stone masonry/ concrete (plain and reinforced)	cu.m
ii)	Dismantling flexible and cement concrete pavement	cu.m
iii)	Dismantling steel structures	tonne
iv)	Dismantling timber structures	cu.m
v)	Dismantling pipes, guard rails, kerbs, gutters and fencing	linear m
vi)	Utility services	No.

202.7 Rates

The Contract unit rates for the various items of dismantling shall be paid in full for carrying out the required operations including full compensation for all labour, materials, tools, equipment, safeguards and incidentals necessary to complete the work. The rates will include excavation and backfilling to the required compaction and for handling, giving credit towards salvage value disposing of dismantled materials with all lifts and leads.

300

EARTHWORK, EROSION CONTROL AND DRAINAGE

301 EXCAVATION FOR ROADWAY AND DRAINS

301.1 Scope

This work shall consist of excavation, removal and disposal of materials necessary for the construction of roadway, side drains and waterways in accordance with requirements of these Specifications and the lines, grades and cross-sections shown in the drawings or as indicated by the Engineer. It shall include the hauling and stacking of or hauling to sites of embankment and subgrade construction suitable cut materials as required, as also the disposal of unsuitable cut materials in specified manner, with all leads and lifts, reuse of cut materials as may be deemed fit, trimrning and finishing of the road to specified dimensions or as directed by the Engineer.

301.2 Classification of Excavated Material

301.2.1 Classification : All materials involved in excavation shall be classified by the Engineer in the following manner:

a) Soil :

This shall comprise topsoil, turf, sand, silt, loam, clay, mud, peat, black-cotton soil, soft shale or loose moorum, a mixture of these and similar material which yields to the ordinary application of pick, spade and/or shovel, rake or other ordinary digging equipment. Removal of gravel or any other modular material having dimension in any one direction not exceeding 75 mm shall be deemed to be covered under this category.

b) Ordinary Rock (not requiring blasting) This shall include :

i) rock types such as laterites, shales and conglomerates, varieties of limestone and sandstone etc., which may be quarried or split with crow bars, also including any rock which in dry state may be hard, requiring blasting but which, when wet, becomes soft and manageable by means other than blasting;

ii) macadam surfaces such as water bound and bitumen bound; soling of roads, cement concrete pavement, cobble stone, etc. compacted moorum or stabilized soil requiring use of pick axe or shovel or both.

iii) lime concrete, stone masonry and brick work in lime/cement mortar below ground level, reinforced cement concrete which may be broken up with crow bars or picks and stone masonry in cement mortar below ground level; and

iv) boulders which do not require blasting found lying loose on the surface or embedded in river bed, soil, talus, slope wash and terrace material of dissimilar origin.

c) Hard Rock (requiring blasting)

This shall comprise :

i) any rock or cement concrete for the excavation of which the use of mechanical plant and/or blasting is required,

ii) reinforced cement concrete below ground level and in bridge/ ROB/RUB/flyover piers and abutments,

iii) boulders requiring blasting.

d) Hard Rock (using controlled blasting) :

Hard rock requiring blasting as described under (c) but where controlled blasting is to be carried out in locations where built-up area, huts, and are situated at within 200 m of the blast site.

e) Hard Rock (blasting prohibited)

Hard rock requiring blasting as described under (d) but where blasting is prohibited for any reason like people living within 20 m of blast sites etc. and excavation has to be carried out by chiselling, wedging or any other agreed method.

f) Marshy soil

This shall include soils like soft clays and peats excavated below the original ground level of marshes and swamps and soils excavated from other areas requiring continuous pumping or bailing out of water.

301.2.2 Authority for Classification

The classification of excavation shall be decided by the Engineer and his decision shall be final and binding on the Contractor. Merely the use of explosives in excavation will not be considered as a reason for higher classification unless blasting is clearly necessary in the opinion of the Engineer.

301.3 Construction Operations

301.3.1 Setting Out

After the site has been cleared as per Clause 201, the limits of excavation shall be set out true to lines, curves, slopes, grades and sections as shown on the drawings or as directed by the Engineer. Clause 109 shall be applicable for the setting out operations.

301.3.2 Stripping and Storing Topsoil

When so directed by the Engineer, the topsoil existing over the sites of excavation shall be

stripped to specified depths and stockpiled at designated locations for re-use in covering embankment slopes, cut slopes, berms and other disturbed areas where re-vegetation is desired in accordance with Clause 305.3.3. Prior to stripping the topsoil, all trees, shrubs etc. shall be removed along with their roots, with approval of the Engineer.

301.3.3 Excavation–General

All excavations shall be carried out in conformity with the directions laid here-in-under and in a manner approved by the Engineer. The work shall be so done that the suitable materials available from excavation are satisfactorily utilized as deemed fit or as approved by the Engineer.

While planning or executing excavations, the Contractor shall take all adequate precautions against soil erosion, water pollution etc. as per Clause 306, and take appropriate drainage measures to keep the site free of water in accordance with Clause 311.

The excavations shall conform to the lines, grades, side slopes and levels shown on the drawings or as directed by the Engineer. The Contractor shall not excavate outside the limits of excavation. Subject to the permitted tolerances, any excess depth/width excavated beyond the specified levels/dimensions on the drawings shall be made good at the cost of the Contractor with suitable material of characteristics similar to that removed and compacted to the requirements of Clause 305.

All debris and loose material on the slopes of cuttings shall be removed. No backfilling shall be allowed to obtain required slopes excepting that when boulders or soft materials are encountered in cut slopes, these shall be excavated to approved depth on instructions of the Engineer and the resulting cavities filled with suitable material and thoroughly compacted in an appropriate manner.

After excavation, the sides of excavated area shall be trimmed and the area contoured to minimize erosion and ponding, allowing for natural drainage to take place.

301.3.4 Methods, Tools and Equipment

Only such methods, tools and equipment as approved by the Engineer shall be adopted/ used in the work. If so desired by the Engineer, the Contractor shall demonstrate the efficacy of the type of equipment to be used before the commencement of work.

301.3.5 Rock Excavation

Rock, when encountered in road excavation, shall be removed upto the formation level or as otherwise indicated in the drawings. Where, however, unstable shales or other unsuitable materials are encountered at the formation level, these shall be excavated to the extent of

500 mm below the formation level or as otherwise specified. In all cases, the excavation operations shall be so carried out that at no point on cut formations the rock protrudes above the specified levels. Rocks and boulders which are likely to cause differential settlement and also local drainage problems shall be removed to the extent of 500 mm below the formation level in the formation width including side drains.

Where excavation is done to levels lower than those specified, the excess excavation shall be made good as per Clauses 301.3.3 and 301.6 to the satisfaction of the Engineer.

Slopes in rock cutting shall be finished to uniform lines corresponding to slope lines shown on the drawings or as directed by the Engineer. Notwithstanding the foregoing, all loose pieces of rock on excavated slope surface which move when pierced by a crowbar shall be removed.

Where blasting is to be resorted to, the same shall be carried out as per Clause 302 and all precautions indicated therein observed.

Where presplitting is prescribed to be done for the establishment of a specified slope in rock excavation, the same shall be carried out as per Clause 303.

301.3.6 Marsh Excavation

The excavation of soil from marshes/swamps shall be carried out as per the programme approved by the Engineer.

Excavation of marshes shall begin at one end and proceed in one direction across the entire marsh immediately ahead of backfilling with materials like boulders, sand moorum, bricks bats, dismantled concrete as approved by the Engineer. The method and sequence of excavating and backfilling shall be such as to ensure, to the extent practicable, the complete removal or displacement of all muck from within the lateral limits indicated on the drawings or as staked by the Engineer.

301.3.7 Excavation of Road Shoulders/Verge/Median for Widening of Pavement or Providing Treated Shoulders

In the works involving widening of existing pavements or providing paved shoulders, the existing shoulders/verge/median shall be removed to its full width and upto top of the subgrade. The subgrade material within 500 mm from the bottom of the pavement for the widened portion or paved shoulders shall be loosened and recompacted as per Clause 305. Any unsuitable material found in this portion shall be removed and replaced with the suitable material. While doing so, care shall be taken to see that no portion of the existing pavement designated for retention is loosened or disturbed. If the existing pavement gets disturbed or loosened, it shall be dismantled and cut to a regular shape with sides vertical and the

disturbed/loosened portion removed completely and relaid as directed by the Engineer, at the cost of the Contractor.

301.3.8 Excavation for Surface/Sub-Surface Drains

Where the Contract provides for construction of surface/sub-surface drains, the same shall be done as per Clause 309. Excavation for these drains shall be carried out in proper sequence with other works as approved by the Engineer.

301.3.9 Slides

If slips, slides, over-breaks or subsidence occur in cuttings during the process of construction, they shall be removed at the cost of the Contractor as ordered by the Engineer. Adequate precautions shall be taken to ensure that during construction, the slopes are not rendered unstable or give rise to recurrent slides after construction. If finished slopes slide into the roadway subsequently, such slides shall be removed and paid for at the Contract rate for the class of excavation involved, provided the slides are not due to any negligence on the part of the Contractor. The classification of the debris material from the slips, slides etc. shall conform to its condition at the time of removal and payment made accordingly regardless of its condition earlier.

301.3.10 Dewatering

If water is met with in the excavations due to springs, seepage, rain or other causes, it shall be removed by suitable diversions, pumping or bailing out and the excavation kept dry whenever so required or directed by the Engineer. Care shall be taken to discharge the drained water into suitable outlets as not to cause damage to the works, crops or any other property. Due to any negligence on the part of the Contractor, if any such damage is caused, it shall be the sole responsibility of the Contractor to repair/restore to the original condition at his own cost or compensate for the damage.

301.3.11 Use and Disposal of Excavated Materials

All the excavated materials shall either be reused with the approval of the Engineer or disposed off with all leads and lifts as directed by the Engineer.

301.3.12 Backfilling

Backfilling of masonry/concrete hume pipe or drain excavation shall be done with approved material with all leads and lifts after concrete/masonry/hume pipe is fully set and carried out in such a way as not to cause undue thrust on any part of the structure and/or not to cause differential settlement. All space between the drain walls and the side of the excavation

shall be backfilled to the original surface making due allowance for settlement, in layers not exceeding 150 mm compacted thickness to the required density, using suitable compaction equipment such as trench compactor, mechanical tamper, rammer or plate compactor as directed by the Engineer.

301.4 Plying of Construction Traffic

Construction traffic shall not use the cut formation and finished subgrade without the prior permission of the Engineer. Any damage arising out of such use shall be made good by the Contractor at his own cost.

301.5 Preservation of Property

The Contractor shall undertake all reasonable precautions for the protection and preservation of any or all existing roadside trees, drains, sewers, sub-surface drains, pipes, conduits and any other structures under or above ground, which may be affected by construction operations and which, in the opinion of the Engineer, shall be continued in use without any change. Safety measures taken by the Contractor in this respect, shall be got approved from the Engineer. However, if any, of these objects is damaged by reason of the Contractor's negligence, it shall be replaced or restored to the original condition at his cost. If the Contractor fails to do so, within the required time as directed by the Engineer or if, in the opinion of the Engineer, the actions initiated by the Contractor to replace/restore the damaged objects are not satisfactory, the Engineer shall arrange the replacement/restoration directly through any other agency at the risk and cost of the Contractor after issuing prior notice to the effect.

301.6 Preparation of Cut Formation

The cut formation, which serves as a sub-grade, shall be prepared to receive the sub-base/ base course as directed by the Engineer.

Where the material in the subgrade has a density less than specified in Table 300-1, the same shall be loosened to a depth of 500 mm and compacted in layers in accordance with the requirements of Clause 305 adding fresh material, if any required, to maintain the formation level as shown on the drawings. Any unsuitable material encountered in the subgrade level shall be removed as directed by the Engineer, replaced with suitable material and compacted in accordance with Clause 305.

In rocky formations, the surface irregularities shall be corrected and the levels brought up to the specified elevation with granular base material as directed by the Engineer, laid and compacted in accordance with the respective Specifications for these materials. The unsuitable material shall be disposed of in accordance with Clause 301.3.11. After satisfying

the density requirements, the cut formation shall be prepared to receive the sub-base/base course in accordance with Clauses 310 and 311.

301.7 Finishing Operations

Finishing operations shall include the work of properly shaping and dressing all excavated surfaces.

When completed, no point on the slopes shall vary from the designated slopes by more than 150 mm measured at right angles to the slope, except where excavation is in rock (ordinary or hard) where no point shall vary more than 300 mm from the designated slope. In no case shall any portion of the slope encroach on the roadway.

The finished cut formation shall satisfy the surface tolerances described in Clause 902.

Where directed, the topsoil removed and conserved (Clauses 301.3.2 and 305.3.3) shall be spread over cut slopes, shoulders and other disturbed areas. Slopes may be roughened and moistened slightly, prior to the application of topsoil, in order to provide satisfactory bond. The depth of topsoil shall be sufficient to sustain plant growth, the usual thickness being from 75 mm to 100 mm.

301.8 Measurements for Payment

Excavation for roadway shall be measured by taking cross-sections at suitable intervals before the excavation starts (after clearing and grubbing/stripping etc. as the case may be) and after its completion and computing the volumes in cu.m by the method of average end areas for each class of material encountered. Where it is not feasible to compute volumes by this method because of erratic location of isolated deposits, the volumes shall be computed by other accepted methods.

At the option of the Engineer, the Contractor shall leave depth indicators during excavations of such shape and size and in such positions as directed so as to indicate the original ground level as accurately as possible. The Contractor shall see that these remain intact till the final measurements are taken.

For rock excavation, the overburden shall be removed first so that necessary cross-sections could be taken for measurement. Where cross-sectional measurements could not be taken due to irregular configuration or where the rock is admixed with other classes of materials, the volumes shall be computed on the basis of measurement of stacks of excavated rubble allowing a deduction of 35% therefrom. When volume is calculated on the basis of measurement of stacks of the excavated material other than rock, a deduction of 16% of stacked volume shall be allowed.

Works involved in the preparation of cut formation shall be measured in units indicated below:

i)	Loosening and recompacting the loosened material at subgrade	....cu.m
ii)	Loosening and removal of unsuitable material and replacing with suitable material and compacting to required density	...cu.m
iii)	Preparing rocky subgrade	...sq.m
iv)	Stripping including storing and reapplication of topsoil	...cu.m

301.9 Rates

301.9.1 The Contract unit rates for the items of roadway and drain excavation shall be payment in full for carrying out the operations required for the individual items including full compensation for:

i) setting out;

ii) transporting the excavated materials for use or disposal with all leads and lifts by giving suitable credit towards the cost of re-usable material and salvage value of unusable material;

iii) trimming bottoms and slopes of excavation;

iv) dewatering;

v) keeping the work free of water as per Clause 311;

vi) arranging disposal sites; and

vii) all labour, materials, tools, equipment., safety measures, testing and incidentals necessary to complete the work to Specifications.

Where presplitting of rock is prescribed it shall be governed by Clause 303.5.

301.9.2 The Contract unit rate for loosening and recompacting the loosened materials at subgrade shall include full compensation for loosening to the specified depth, including breaking clods, spreading in layers, watering where necessary and compacting to the requirements.

301.9.3 Clauses 301.9.1 and 305.8 shall apply as regards Contract unit rate for item of removal of unsuitable material and replacement with suitable material respectively.

301.9.4 The Contract unit rate for item of preparing rocky sub-grade as per Clause 301.6 shall be full compensation for providing, laying and compacting granular base material for correcting surface irregularities including all materials, labour and incidentals necessary to complete the work and all leads and lifts.

301.9.5 The Contract unit rate for the items of stripping and storing topsoil and of reapplication of topsoil shall include full compensation for all the necessary operations including all lifts and leads.

302 BLASTING OPERATIONS

302.1 General

Blasting shall be carried out in a manner that completes the excavation to the lines indicated in drawings, with the least disturbance to adjacent material. It shall be done only with the written permission of the Engineer. All the statutory laws, regulations, rules, etc., pertaining to the acquisition, transportation, storage, handling and use of explosives shall be strictly followed by the contractor.

The Contractor may adopt any method or methods of blasting consistent with the safety and job requirements. Prior to starting any phase of the operation, the Contractor shall provide information describing pertinent blasting procedures, dimensions and notes.

The magazine for the storage of explosives shall be built to the designs and specifications of the Explosives Department concerned and located at the approved site. The storage places shall be clearly marked "DANGER-EXPLOSIVES". The Contractor shall be liable for property damage, injury or death resulting from the use of explosives. All permits shall be obtained by the Contractor. No unauthorized person shall be admitted into the magazine which, when not in use, shall be kept securely locked. No matches or inflammable material shall be allowed in the magazine. The magazine shall have an effective lightning conductor. The following shall be hung in the lobby of the magazine:

a) A copy of the relevant rules regarding safe storage both in English and in the language with which the workers concerned are familiar,

b) A statement of up-to-date stock in the magazine,

c) A certificate showing the last date of testing of the lightning conductor, and

d) A notice that smoking is strictly prohibited.

All explosives shall be stored in a secure manner in compliance with all laws and ordinances, and all such storage places shall be marked. Where no local laws or ordinances apply, storage shall be provided to the satisfaction of the Engineer and in general not closer than 300 m from the road or from any building or camping area or place of human occupancy. In addition to these, the Contractor shall also observe the following instructions and any further additional instructions which may be given by the Engineer and shall be responsible for damage to property and any accident which may occur to workmen or public on account of any operations connected with the storage, handling or use of explosives and blasting. The Engineer shall frequently check the Contractor's compliance with these precautions.

302.2 Materials, Tools and Equipment

All the materials, tools and equipment used for blasting operations shall be of approved type. The Engineer may specify the type of explosives to be allowed in special cases. The fuse to be used in wet locations shall be sufficiently water-resistant as to be unaffected when immersed in water for 30 minutes. The rate of burning of the fuse shall be uniform and definitely known to permit such a length being cut as will permit sufficient time to the firer to reach safely before explosion takes place. Detonators shall be capable of giving effective blasting of the explosives. The blasting powder, explosives, detonators, fuses, etc., shall be fresh and not damaged due to dampness, moisture or any other cause. They shall be inspected before use and damaged articles shall be discarded totally and removed from the site immediately.

302.3 Personnel

The blasting operation shall remain in the charge of competent and experienced supervisor and workmen who are thoroughly acquainted with the details of handling explosives and blasting operations.

302.4 Blasting Operations

The blasting shall be carried out during the pre-determined hours of the day preferably during the mid-day luncheon hour or at the close of the work as ordered in writing by the Engineer. The hours shall be made known to the people in the vicinity.

The Contractor shall notify each public utility company having structures in proximity to the site of the work of his intention to use explosives. Such notice shall be given sufficiently in advance to enable the companies to take such steps as they may deem necessary to protect their property from injury. In advance of any blasting work within 50 m of any railway track or structures, the Contractor shall notify the concerned Railway Authority of the location, date, time and approximate duration of such blasting operation.

Red danger flags shall be displayed prominently in all directions during the blasting operations. The flags shall be planted 200 m from the blasting site in all directions. People, except those who actually light the fuse, shall be prohibited from entering this area and all persons including workmen shall be kept away from the flagged area, and all persons including workmen shall be removed from the flagged area at least 10 minutes before the firing. A warning siren shall be sounded for the above purpose.

Only controlled blasting shall be resorted to along with the safeguard above at locations where built-up area, huts and structures in use lie within 200 m. Similarly excavation of hard rock without blasting is mandatory where people live within 20 m of blast site.

The charge holes shall be drilled to required depths and at suitable places. Blasting should be as light as possible consistent with thorough breakage of the material necessary for economic loading and hauling. Any method of blasting which leads to overshooting shall be discontinued.

When blasting is done with powder, the fuse cut to the required length shall be inserted into the hole and the powder dropped shall be gently tamped with copper roads with rounded ends. The explosive powder shall then be covered with tamping material which shall be tamped lightly but firmly.

When blasting is done with dynamite and other high explosives, dynamite cartridges shall be prepared by inserting the square cut end of a fuse into the detonator and finishing it with nippers at the open end, the detonator gently pushed into the primer leaving 1/3rd of the copper tube exposed outside. The paper of the cartridge shall then be closed up and securely bound with wire or twine. The primer shall be housed into the explosive. Boreholes shall be cleared of all debris and explosives inserted. The space of about 200 mm above the charge shall then be gently filled with dry clay, pressed home and the rest of the tamping formed of any convenient material gently packed with a wooden rammer.

At a time not more than 10 such charges will be prepared and fired. The man in charge shall blow a siren in a recognized manner for cautioning the people. All the people shall then be required to move to safe distances. The charges shall be lighted by the man-in-charge only. The man-in-charge shall count the number of explosions. He shall satisfy himself that all the charges have been exploded before allowing the workmen to go back to the work site.

After blasting operation, the Contractor shall compact the loose residual material below subgrade and replace the material removed below subgrade with suitable material.

302.5 Misfire

In case of misfire, the following procedure shall be observed:

i) Sufficient time shall be allowed to account for the delayed blast. The man-in-charge shall inspect all the charges and determine the missed charge.

ii) If it is the blasting powder charge, it shall be completely flooded with water. A new hole shall be drilled at about 450 mm from the old hole and fired. This should blast the old charge. In case, it does not blast the old charge, the procedure shall be repeated till the old charge is blasted.

iii) In case of charges of gelignite, dynamite, etc., the man-in-charge shall gently remove the tamping and the primer with the detonator. A fresh detonator and primer shall then be used to blast the charge. Alternatively,

the hole may be cleared of 300 mm of tamping and the direction then ascertained by placing a stick in the hole. Another hole may then be drilled 150 mm away and parallel to it. This hole shall then be charged and fired when the misfired hole should explode at the same time. The man-in-charge shall at once report to the Contractor's office and the Engineer all cases of misfire, the cause of the same and what steps were taken in connection therewith.

If a misfire has been found to be due to defective detonator or dynamite, the whole quantity in the box from which defective article was taken must be sent to the authority directed by the Engineer for inspection to ascertain whether all the remaining materials in the box are also defective.

302.6 Account

A careful and day to day account of the explosive shall be maintained by the Contractor in an approved register and manner which shall be open to inspection by the Engineer at all times.

303 PRESPLITTING ROCK EXCAVATION SLOPES

303.1 General

Presplitting is defined as the establishment of a specified excavation slope in rock by the controlled use of explosives and blasting accessories in properly aligned and spaced drill holes.

The presplitting technique shall be used for forming rock excavation slopes at locations shown on the drawings or as otherwise decided by the Engineer.

303.2 Construction Operations

Prior to starting drilling operations for presplitting, the Contractor shall furnish the Engineer a plan outlining the position of all drill holes, depth of drilling, type of explosives to be used, loading pattern and sequence of firing. The drilling and blasting plan is for record purposes only and will not absolve the Contractor of his responsibility for using proper drilling and blasting procedures. Controlled blasting shall begin with a short test section of a length approved by the Engineer. The test section shall be presplit, production drilled and blasted and sufficient material excavated whereby the Engineer can determine if the Contractor's method have produced an acceptable slope.

All overburden soil and weathered rock along the top of the excavation for a distance of about 5 to 15 m beyond the drilling limits, or to the end of the excavation, as decided by the

Engineer shall be removed before drilling the presplitting holes. Particular care and attention shall be directed to the beginning and end of excavations to ensure complete removal of all overburden soil and weathered rock and to expose fresh rock to an elevation equal to the bottom of the adjacent lift of the presplitting holes being drilled.

Slope holes for presplitting shall be drilled along the line of the planned slope within the specified tolerances. The drill holes shall not be less than 60 mm nor more than 75 mm in diameter. Drilling operations shall be controlled by the use of proper equipment and technique to ensure that no hole shall deviate from the plane of the planned slope by more than 300 mm nor shall any hole deviate from being parallel to an adjacent hole by more than two-third of the planned horizontal spacing between holes.

The length of presplit holes for any individual lift shall not exceed 9 m.

The spacing of presplit holes shall not exceed 900 mm on centres and shall be adjusted to result in a uniform shear face between holes.

Auxiliary drill holes along the presplit line, not loaded or stemmed, may be ordered by the Engineer. Except for spacing, auxiliary drill holes shall conform to the provisions for presplit holes.

The line of production holes shall be placed inside the presplit lines in such a manner as to avoid damage to the presplit face.

If necessary, to reduce shatter and overbreak of the presplit surface, the first line of the production holes shall be drilled parallel to the slope line at the top of the cut and at each bench level thereafter.

Any blasting technique, which results in damage to the presplit surface, shall be immediately discontinued.

No portion of any production holes shall be drilled within 2.5 m of a presplit plane except as approved by the Engineer. The bottom of the production holes shall not be lower than the bottom of the presplit holes.

A maximum offset of 600 mm will be permitted for a construction working bench at the bottom of each lift for use in drilling the next lower presplitting pattern. The drilling operations shall be adjusted to compensate for drift of previous levels and for the offset at the start of new levels to maintain the specified slope plane.

The maximum diameter of explosives used in presplit holes shall not be greater than one-half the diameter of the presplit hole.

Only standard cartridge explosives prepared and packaged by explosive manufacturing firms shall be used in presplit holes. These shall be fired as recommended by the manufacturer. Ammonium nitrate composition blasting agents will not be permitted in presplitting operations.

Stemming may be required to achieve a satisfactory presplit face. Stemming material shall be dry free-running material all of which passes 11.2 mm sieve and 90 percent of which is retained on 2.80 mm sieve. Stemmed presplit holes shall be completely filled to the collar.

All charges in each presplitting pattern shall be detonated simultaneously.

303.3 Tolerances

The presplit face shall not deviate more than 300 mm from the plane passing through adjacent drill holes, except where the character of the rock is such that, as determined by the Engineer, irregularities are unavoidable. When completed, the average plane of the slopes shall conform to the slopes indicated on the plans and no point on the completed slopes shall vary from the designated slopes by more than 300 mm. These tolerances shall be measured perpendicular to the plane of the slope. In no case shall any portion of the slope encroach on the side drains.

As long as equally satisfactory presplit slopes are obtained, then either the slope face may be presplit before drilling for production blasting or presplitting the slope face and production blasting may be done at the same time, provided that the presplitting drill holes are fired with zero delay and the production holes are delayed starting at the row of holes farthest from the slope and progressing in steps to the row of holes nearest the presplit lines, which row shall be delayed at least 50 milliseconds. In either case the presplitting holes shall extend either to the end of the excavation or for a distance of not less than 15 m beyond the limits of the production holes to be detonated.

303.4 Measurements for Payment

The area of presplitting to be paid for, will be measured as square metres of acceptable presplit slope surface.

303.5 Rates

The Contract unit rate for presplitting work shall be payment in full for carrying out the required operations for obtaining acceptable presplit slope surfaces. The quantity of rock excavated through the production/presplit holes shall be paid for as per Clause 301.9.1.

304 EXCAVATION FOR STRUCTURES

304.1 Scope

Excavation for structures shall consist of the removal of material for the construction of foundations for bridges, culverts, retaining walls, headwalls, cutoff walls, pipe culverts and other similar structures, in accordance with the requirements of these Specifications and the lines and dimensions shown on the drawings or as indicated by the Engineer. The work shall include construction of the necessary cofferdams and cribs and their subsequent removal; all necessary sheeting, shoring, bracing, draining and pumping; the removal of all logs, stumps, grubs and other deleterious matter and obstruction, necessary for placing the foundations; trimming bottoms of excavations; backfilling and clearing up the site and the disposal of all surplus material.

304.2 Classification of Excavation

All materials involved in excavation shall be classified in accordance with Clause 301.2.

304.3 Construction Operations

304.3.1 Setting Out

After the site has been cleared according to Clause 201, the limits of excavation shall be set out true to lines, curves and slopes to Clause 301.3.1.

304.3.2 Excavation

Excavation shall be taken to the width of the lowest step of the footing including additional width as required for construction operation. The sides shall be left plumb where the nature of soil allows it. Where the nature of soil or the depth of the trench and season of the year do not permit vertical sides, the Contractor at his own cost shall put up necessary shoring, strutting and planking or cut slopes to a safer angle or both with due regard to the safety of personnel and works and to the satisfaction of the Engineer.

The depth to which the excavation is to be carried out shall be as shown on the drawings, unless the type of material encountered is such as to require changes, in which case the depth shall be as ordered by the Engineer. Propping shall be undertaken when any foundation or stressed zone from an adjoining structure is within a line of 1 vertical to 2 horizontal from the bottom of the excavation.

Where blasting is to be resorted-to, the same shall be carried out in accordance with Clause 302 and all precautions indicated therein observed. Where blasting is likely to

endanger adjoining foundations or other structures, necessary precautions such as controlled blasting, providing rubber mat cover to prevent flying of debris etc. shall be taken to prevent any damage.

304.3.3 Dewatering and Protection

Normally, open foundations shall be laid dry. Where water is met with in excavation due to stream flow, seepage, springs, rain or other reasons, the Contractor shall take adequate measures such as bailing, pumping, constructing diversion channels, drainage channels, bunds, depression of water level by well-point system, cofferdams and other necessary works to keep the foundation trenches dry when so required and to protect the green concrete/ masonry against damage by erosion or sudden rising of water level. The methods to be adopted in this regard and other details thereof shall be left to the choice of the Contractor but subject to the approval of the Engineer. Approval of the Engineer shall, however, not relieve the Contractor of the responsibility for the adequacy of dewatering and protection arrangements for the quality and safety of the works.

Where cofferdams are required, these shall be carried to adequate depths and heights, be safely designed and constructed and be made as watertight as is necessary for facilitating construction to be carried out inside them. The interior dimensions of the cofferdams shall be such as to give sufficient clearance for the construction and inspection and to permit installation of pumping equipments, etc., inside the enclosed area.

If it is determined beforehand that the foundations cannot be laid dry or the situation is found that the percolation is too heavy for keeping the foundation dry, the foundation concrete shall be laid under water by tremie pipe only. In case of flowing water or artesian springs, the flow shall be stopped or reduced as far as possible at the time of placing the concrete.

Pumping from the interior of any foundation enclosure shall be done in such a manner as to preclude the possibility of the movement of water through any fresh concrete. No pumping shall be permitted during the placing of concrete and for a period of at least 24 hours thereafter, unless it is done from a suitable sump separated from the concrete work by a watertight wall or other similar means.

At the discretion of the Contractor, cement grouting or other approved methods may be used to prevent or reduce seepage and to protect the excavation area.

The Contractor shall take all precautions in diverting channels and in discharging the drained water as not to cause damage to the works, crops or any other property.

304.3.4 Preparation of Foundation

The bottom of the foundation shall be levelled both longitudinally and transversely or stepped as directed by the Engineer. Before footing is laid, the surface shall be slightly watered and

rammed. In the event of excavation having been made deeper than that shown on the drawings or as otherwise ordered by the Engineer, the extra depth shall be made up with concrete as per Clause 2104.1 at the cost of the Contractor. Ordinary filling shall not be permitted to bring the foundation to the design level as shown in the drawing.

When rock or other hard strata is encountered, it shall be freed of all soft and loose material, cleaned and cut to a firm surface either level or stepped as directed by the Engineer. All seams shall be cleaned out and filled with cement mortar or grout to the satisfaction of the Engineer. In the case of excavation in rock, annular space around footing shall be filled with lean concrete M 15 upto the top level of rock.

If the depth of fill required is more than 1.5 m in soft rock or 0.6 m in hard rock above the foundation level, the filling upto this level shall be done with M-15 concrete and portion above shall be filled by concrete or by boulders grouted with cement.

When foundation piles are used, the excavation for pile cap shall be done after driving/casting of all piles forming the group. After pile driving operations in a given pit are completed, all loose and displaced materials therein shall be removed to the level of the bottom of the pile cap.

304.3.5 Slips and Slip-Outs

If there are any slips or slip-outs in the excavation, these shall be removed by the Contractor at his own cost.

304.3.6 Public Safety

Near towns, villages and all frequented places, trenches and foundation pits shall be securely fenced, provided with proper caution signs and marked with red lights at night to avoid accidents. The Contractor shall take adequate protective measures to see that the excavation operations do not affect or damage adjoining structures. For safety precautions, guidance may be taken from IS:3764.

304.3.7 Backfilling

Backfilling shall be done with approved material after concrete or masonry is fully set and carried out in such a way as not to cause undue thrust on any part of the structure. All space between foundation masonry or concrete and the sides of excavation shall be refilled to the original surface in layers not exceeding 150 mm compacted thickness. The compaction shall be done with the help of suitable equipment such as trench compactor, mechanical tamper, rammer, plate vibrator etc., after necessary watering, so as to achieve the maximum dry density.

304.3.8 Disposal of Surplus Excavated Materials

Clause 301.3.11 shall apply.

304.4 Measurements for Payment

Excavation for structures shall be measured in cu.m for each class of material encountered, limited to the dimensions shown on the drawings or as directed by the Engineer. Excavation over increased width, cutting of slopes, production/support to the existing structures shoring, shuttering and planking shall be deemed as incidental to the main work and shall not be measured and paid separately.

Preparation of rock foundation shall be measured in square metres.

304.5 Rates

304.5.1 The Contract unit rate for the items of excavation for structures shall be payment in full for carrying out the required operations including full compensation for:

i) setting out;

ii) transporting the excavated materials for use or disposal with all leads and lifts;

iii) construction of necessary cofferdams, cribs/sheeting, shoring and bracing and their subsequent removal;

iv) removal of all logs, stumps, grubs and other deleterious matter and obstructions, for placing the foundations including trimming of bottoms of excavations;

v) foundation sealing, dewatering including pumping when no separate provision for it is made in the Contract;

vi) backfilling, clearing up the site and disposal of all surplus material with all leads and lifts or as otherwise specified; and

vii) all labour, materials, tools, equipment, safety measures, diversion of traffic and incidentals necessary to complete the work to Specifications.

304.5.2 The Contract unit rate for preparation of rock foundation shall be full compensation for cutting, trimming and cleaning the foundation surface and filling/sealing of all seams with cement grout or mortar including all materials, labour and incidentals required for completing the work.

305 EMABANKMENT CONSTRUCTION

305.1 General

305.1.1 Description

These Specifications shall apply to the construction of embankments including sub-grades, earthen shoulders and miscellaneous backfills with approved material obtained from approved source, including material from roadway and drain excavation, borrow pits or other sources. All embankments sub-grades, earthen shoulders and miscellaneous backfills shall be constructed in accordance with the requirements of these Specifications and in conformity with the lines, grades, and cross-sections shown on the drawings or as directed by the Engineer.

305.2 Materials and General Requirements

305.2.1 Physical Requirements

305.2.1.1 The materials used in embankments, subgrades, earthen shoulders and miscellaneous backfills shall be soil, moorum, gravel, reclaimed material from pavement, fly ash, pond ash, a mixture of these or any other material as approved by the Engineer. Such materials shall be free of logs, stumps, roots, rubbish or any other ingredient likely to deteriorate or affect the stability of the embankment.

The following types of material shall be considered unsuitable for embankment:

a) Materials from swamps, marshes and bogs;

b) Peat, log, stump and perishable material; any soil that classifies as OL, OI, OH or Pt in accordance with IS:1498;

c) Materials susceptible to spontaneous combustion;

d) Materials in a frozen condition;

e) Clay having liquid limit exceeding 50 and plasticity index exceeding 25; and

f) Materials with salts resulting in leaching in the embankment.

305.2.1.2 Expansive clay exhibiting marked swell and shrinkage properties ("free swelling index" exceeding 50 percent when tested as per IS:2720 – Part 40) shall not be used as a fill material. Where an expansive clay having "free swelling index" value less than 50 percent is used as a fill material, subgrade and top 500 mm portion of the embankment just below sub-grade shall be non-expansive in nature.

305.2.1.3 Any fill material with a soluble sulphate content exceeding 1.9 grams of sulphate (expressed as SO_3) per litre when tested in accordance with BS:1377, Part 3, but using a 2:1 water-soil ratio shall not be deposited within 500 mm distance(or any other distance described in the Contract), of permanent works constructed out of concrete, cement bound materials or other cementitious material.

Materials with a total sulphate content (expressed as SO_3) exceeding 0.5 percent by mass, when tested in accordance with BS:1377, Part 3 shall not be deposited within 500 mm, or other distances described in the Contract, of metallic items forming part of the Permanent Works.

305.2.1.4 The size of the coarse material in the mixture of earth shall ordinarily not exceed 75 mm when placed in the embankment and 50 mm when placed in the sub-grade. However, the Engineer may at his discretion permit the use of material coarser than this also if he is satisfied that the same will not present any difficulty as regards the placement of fill material and its compaction to the requirements of these Specifications. The maximum particle size in such cases, however, shall not be more than two-thirds of the compacted layer thickness.

305.2.1.5 Ordinarily, only the materials satisfying the density requirements given in Table 300-1 shall be employed for the construction of the embankment and the sub-grade.

Table 300-1 : Density Requirements of Embankment and Sub-grade Materials

S. No.	Type of Work	Maximum laboratory dry unit weight when tested as per IS:2720 (Part 8)
1)	Embankments up to 3 m height, not subjected to extensive flooding	Not less than 15.2 kN/cu.m
2)	Embankments exceeding 3 m height or embankments of any height subject to long periods of inundation	Not less than 16 kN/ cu.m
3)	Subgrade and earthen shoulders/verges/ backfill	Not less than 17.5 kN/cu.m

Notes: 1) This Table is not applicable for lightweight fill material, e.g., cinder, fly ash, etc.

2) The material to be used in subgrade shall be non-expansive and shall satisfy design CBR at the specified dry density and moisture content. In case the available materials fail to meet the requirement of CBR, use of stabilization methods in accordance with Clauses 403 and 404 or by any stabilization method approved by the Engineer shall be followed.

305.2.1.6 The material to be used in subgrade shall conform to the design CBR value at the specified dry density and moisture content of the test specimen. In case the available

materials fails to meet the requirement of CBR, use of stabilization methods in accordance with Clauses 403 and 404 or by any stabilization method approved by the Engineer or by the IRC Accreditation Committee shall be followed.

305.2.1.7 The material to be used in high embankment construction shall satisfy the specified requirements of strength parameters.

305.2.2 General Requirements

305.2.2.1 The materials for embankment shall be obtained from approved sources with preference given to acceptable materials becoming available from nearby roadway excavation under the same Contract.

The work shall be so planned and executed that the best available materials are saved for the subgrade and the embankment portion just below the subgrade.

305.2.2.2 Borrow Materials

The arrangement for the source of supply of the material for embankment and sub-grade and compliance with the guidelines, and environmental requirements, in respect of excavation and borrow areas as stipulated, from time to time by the Ministry of Environment and Forests, Government of India and the local bodies, as applicable shall be the sole responsibility of the Contractor.

Borrow pits along the road shall be discouraged. If permitted by the Engineer, these shall not be dug continuously. Ridges of not less than 8 m width should be left at intervals not exceeding 300 m. Small drains shall be cut through the ridges to facilitate drainage. The depth of the pits shall be so regulated that their bottom does not cut an imaginary line having a slope of 1 vertical to 4 horizontal projected from the edge of the final section of the bank, the maximum depth in any case being limited to 1.5 m. Also, no pit shall be dug within the offset width of a minimum of 10 m.

Haulage of material to embankments or other areas of fill shall proceed only when sufficient spreading and compaction plant is operating at the place of deposition.

Where the excavation reveals a combination of acceptable and unacceptable materials, the Contractor shall, unless otherwise agreed by the Engineer, carry out the excavation in such a manner that the acceptable materials are excavated separately for use in the permanent works without contamination by the unacceptable materials. The acceptable materials shall be stockpiled separately.

The Contractor shall ensure that he does not adversely affect the stability of excavation or fills by the methods of stockpiling materials, use of plants or siting of temporary buildings or structures.

305.2.2.3 Fly-Ash

Use of fly-ash shall conform to the Ministry of Environment and Forest guidelines. Where fly-ash is used the embankment construction shall conform to the physical and chemical properties and requirements of IRC:SP:38-2001, "Guidelines for Use of Flyash in Road Construction". The term fly-ash shall cover all types of coal ash such as pond ash, bottom ash or mound ash.

Embankment constructed out of fly ash shall be properly designed to ensure stability and protection against erosion in accordance with IRC guidelines. A suitable thick cover may preferably be provided at intervening layers of pond ash for this purpose. A thick soil cover shall bind the edge of the embankment to protect it against erosion. Minimum thickness of such soil cover shall be 500 mm.

305.2.2.4 Compaction Requirements

The Contractor shall obtain representative samples from each of the identified borrow areas and have these tested at the site laboratory following a testing programme approved by the Engineer. It shall be ensured that the subgrade material when compacted to the density requirements as in Table 300-2 shall yield the specified design CBR value of the sub-grade.

Table 300-2 : Compaction Requirements for Embankment and Sub-grade

S. No.	Type of work/material	Relative compaction as percentage of max. laboratory dry density as per IS:2720 (Part 8)
1)	Subgrade and earthen shoulders	Not less than 97%
2)	Embankment,	Not less than 95%
3)	Expansive Clays a) Subgrade and 500 mm portion just below the subgrade b) Remaining portion of embankment	 Not allowed 90–95%

The Contractor shall at least 7 working days before commencement of compaction submit the following to the Engineer for approval:

i) The values of maximum dry density and optimum moisture content obtained in accordance with IS:2720 (Part 8), appropriate for each of the fill materials he intends to use.

ii) A graph of dry density plotted against moisture content from which each of the values in (i) above of maximum dry density and optimum moisture content were determined.

The maximum dry density and optimum moisture content approved by the Engineer shall form the basis for compaction.

305.3 Construction Operations

305.3.1 Setting Out

After the site has been cleared to Clause 201, the work shall be set out to Clause 301.3.1 The limits of embankment/sub-grade shall be marked by fixing batter pegs on both sides at regular intervals as guides before commencing the earthwork. The embankment/sub-grade shall be built sufficiently wider than the design dimension so that surplus material may be trimmed, ensuring that the remaining material is to the desired density and in position specified and conforms to the specified side slopes.

305.3.2 Dewatering

If the foundation of the embankment is in an area with stagnant water, and in the opinion of the Engineer it is feasible to remove it, the same shall be removed by bailing out or pumping, as directed by the Engineer and the area of the embankment foundation shall be kept dry. Care shall be taken to discharge the drained water so as not to cause damage to the works, crops or any other property. Due to any negligence on the part of the Contractor, if any such damage is caused, it shall be the sole responsibility of the Contractor to repair/restore it to original condition or compensate for the damage at his own cost.

If the embankment is to be constructed under water, Clause 305.4.6 shall apply.

305.3.3 Stripping and Storing Topsoil

When so directed by the Engineer, the topsoil from all areas of cutting and from all areas to be covered by embankment foundation shall be stripped to specified depths not exceeding 150 mm and stored in stockpiles of height not exceeding 2 m for covering embankment slopes, cut slopes and other disturbed areas where re-vegetation is desired. Topsoil shall not be unnecessarily subjected to traffic either before stripping or when in a stockpile. Stockpiles shall not be surcharged or otherwise loaded and multiple handling shall be kept to a minimum.

305.3.4 Compacting Ground Supporting Embankment/Sub-Grade

Where necessary, the original ground shall be levelled to facilitate placement of first layer of embankment, scarified, mixed with water and then compacted by rolling in accordance with Clauses 305.3.5 and 305.3.6 so as to achieve minimum dry density as given in Table 300-2.

In case where the difference between the sub-grade level (top of the sub-grade on which pavement rests) and ground level is less than 0.5 m and the ground does not have 97 percent relative compaction with respect to the dry density (as given in Table 300-2), the ground shall be loosened upto a level 0.5 m below the sub-grade level, watered and compacted in layers in accordance with Clauses 305.3.5 and 305.3.6 to achieve dry density not less than 97 percent relative compaction as given in Table 300-2.

Where so directed by the Engineer, any unsuitable material occurring in the embankment foundation (500 mm portion just below the sub-grade) shall be removed, suitably disposed and replaced by approved materials laid in layers to the required degree of compaction.

Any foundation treatment specified for embankments especially high embankments, resting on suspect foundations as revealed by borehole logs shall be carried out in a manner and to the depth as desired by the Engineer. Where the ground on which an embankment is to be built has any of such material types (a) to (f) in Clause 305.2.1.1 at least 500 mm of such material must be removed and replaced by acceptable fill material before embankment construction commences.

305.3.5 Spreading Material in Layers and Bringing to Appropriate Moisture Content

305.3.5.1 The embankment and sub-grade material shall be spread in layers of uniform thickness in the entire width with a motor grader. The compacted thickness of each layer shall not be more than 250 mm when vibratory roller/vibratory soil compactor is used and not more than 200 mm when 80-100 kN static roller is used. The motor grader blade shall have hydraulic control suitable for initial adjustment and maintain the same so as to achieve the specific slope and grade. Successive layers shall not be placed until the layer under construction has been thoroughly compacted to the specified requirements as in Table 300-2 and got approved by the Engineer. Each compacted layer shall be finished parallel to the final cross-section of the embankment.

305.3.5.2 Moisture content of the material shall be checked at the site of placement prior to commencement of compaction; if found to be out of agreed limits, the same shall be made good. Where water is required to be added in such constructions, water shall be sprinkled from a water tanker fitted with sprinkler capable of applying water uniformly with a controllable rate of flow to variable widths of surface but without any flooding. The water shall be added uniformly and thoroughly mixed in soil by blading, using disc harrow until a uniform moisture content is obtained throughout the depth of the layer.

If the material delivered to the roadbed is too wet, it shall be dried, by aeration and exposure to the sun, till the moisture content is acceptable for compaction. Should circumstances arise, where owing to wet weather, the moisture content cannot be reduced to the required amount by the above procedure, compaction work shall be suspended.

Moisture content of each layer of soil shall be checked in accordance with IS:2720 (Part 2), and unless otherwise mentioned, shall be so adjusted, making due allowance for evaporation losses, that at the time of compaction it is in the range of 1 percent above to 2 percent below the optimum moisture content determined in accordance with IS:2720 (Part 8) as the case may be. Expansive clays shall, however, be compacted at moisture content corresponding to the specified dry density, but on the wet side of the optimum moisture content obtained from the laboratory compaction curve.

After adding the required amount of water, the soil shall be processed by means of graders, harrows, rotary mixers or as otherwise approved by the Engineer until the layer is uniformly wet.

Clods or hard lumps of earth shall be broken to have a maximum size of 75 mm when being placed in the embankment and a maximum size of 50 mm when being placed in the sub-grade.

305.3.5.3 Embankment and other areas of fill shall, unless otherwise required in the Contract or permitted by the Engineer, be constructed evenly over their full width and their fullest possible extent and the Contractor shall control and direct construction plant and other construction vehicles. Damage by construction plant and other vehicular traffic shall be made good by the Contractor with material having the same characteristics and strength of the material before it was damaged.

Embankments and unsupported fills shall not be constructed with steeper side slopes or to greater widths than those shown in the drawings, except to permit adequate compaction at the edges before trimming back, or to obtain the final profile following any settlement of the fill and the underlying material,

Whenever fill is to be deposited against the face of a natural slope, or sloping earthworks face including embankments, cuttings, other fills and excavations steeper than 1 vertical to 4 horizontal, such faces shall be benched as per Clause 305.4.1 immediately before placing the subsequent fill.

All permanent faces of side slopes of embankments and other areas of fill shall, subsequent to any trimming operations, be reworked and sealed to the satisfaction of the Engineer by tracking a tracked vehicle, considered suitable by the Engineer, on the slope or any other method approved by the Engineer.

305.3.6 Compaction

Only the compaction equipment approved by the Engineer shall be employed to compact the different material types encountered during construction. Static three-wheeled roller, self propelled single drum vibratory roller, tandem vibratory roller, pneumatic tyre roller, pad foot

roller, etc., of suitable size and capacity as approved by the Engineer shall be used for the different types and grades of materials required to be compacted either individually or in suitable combinations.

The compaction shall be done with the help of self-propelled single drum vibratory roller or pad foot vibratory roller of 80 to 100 kN static weight or heavy pneumatic tyre roller of adequate capacity capable of achieving the required compaction. The Contractor shall demonstrate the efficacy of the equipment he intends to use by carrying out compaction trials. The procedure to be adopted for the site trials shall be submitted to the Engineer for approval.

Earthmoving plant shall not be accepted as compaction equipment nor shall the use of a lighter category of plant to provide any preliminary compaction to assist the use of heavier plant be taken into account.

Each layer of the material shall be thoroughly compacted to the densities specified in Table 300-2. Subsequent layers shall be placed only after the finished layer has been tested according to Clause 903.2.2 and accepted by the Engineer. The Engineer may permit measurement of field dry density by a nuclear moisture/density gauge used in accordance with agreed procedure and provided the gauge is calibrated to give results identical to that obtained from tests in accordance with IS:2720 (Part 28). A record of the same shall be maintained by the Contractor.

When density measurements reveal any soft areas in the embankment/sub-grade/earthen shoulders, further compaction shall be carried out as directed by the Engineer. If inspite of that the specified compaction is not achieved, the material in the soft areas shall be removed and replaced by approved material, compacted using appropriate mechanical means such as light weight vibratory roller, double drum walk behind roller, vibratory plate compactor, trench compactor or vibratory tamper to the density requirements and satisfaction of the Engineer.

305.3.7 Drainage

The surface of the embankment/sub-grade at all times during construction shall be maintained at such a crossfall (not flatter than that required for effective drainage of an earthen surface) as will shed water and prevent ponding.

305.3.8 Repairing of Damages Caused by Rain/Spillage of Water

The soil in the affected portion shall be removed in such areas as directed by the Engineer before next layer is laid and refilled in layers and compacted using appropriate mechanical means such as small vibratory roller, plate compactor or power rammer to achieve the required density in accordance with Clause 305.3.6. If the cut is not sufficiently wide for use of required mechanical means for compaction, the same shall be widened suitably to permit their use for proper compaction. Tests shall be carried out as directed by the Engineer to

ascertain the density requirements of the repaired area. The work of repairing the damages including widening of the cut, if any, shall be carried out by the Contractor at his own cost, including the arranging of machinery/equipment for the purpose.

305.3.9 Finishing Operations

Finishing operations shall include the work of shaping and dressing the shoulders/verge/ roadbed and side slopes to conform to the alignment, levels, cross-sections and dimensions shown on the drawings or as directed by the Engineer subject to the surface tolerance described in Clause 902. Both the upper and lower ends of the side slopes shall be rounded off to improve appearance and to merge the embankment with the adjacent terrain.

The topsoil, removed and conserved earlier (Clauses 301.3.2 and 305.3.3) shall be spread over the fill slopes as per directions of the Engineer to facilitate the growth of vegetation. Slopes shall be roughened and moistened slightly prior to the application of the topsoil in order to provide satisfactory bond. The depth of the topsoil shall be sufficient to sustain plant growth, the usual thickness being from 75 mm to 150 mm.

Where directed, the slopes shall be turfed with sods in accordance with Clause 307. If seeding and mulching of slopes is prescribed, this shall be done to the requirements of Clause 308.

When earthwork operations have been substantially completed, the road area shall be cleared of all debris, and ugly scars in the construction area responsible for objectionable appearance eliminated.

305.4 Construction of Embankment and Sub-grade under Special Conditions

305.4.1 Earthwork for Widening Existing Road Embankment

When an existing embankment and/or sub-grade is to be widened and its slopes are steeper than 1 vertical on 4 horizontal, continuous horizontal benches, each at least 300 mm wide, shall be cut into the old slope for ensuring adequate bond with the fresh embankment/sub-grade material to be added. The material obtained from cutting of benches could be utilized in the widening of the embankment/subgrade. However, when the existing slope against which the fresh material is to be placed is flatter than 1 vertical on 4 horizontal, the slope surface may only be ploughed or scarified instead of resorting to benching.

Where the width of the widened portions is insufficient to permit the use of conventional rollers, compaction shall be carried out with the help of light weight vibratory roller, double drum walk behind roller, vibratory plate compactor or vibratory tamper or any other appropriate equipment approved by the Engineer. End dumping of material from trucks for widening operations shall be avoided except in difficult circumstances when the extra width is too narrow to permit the movement of any other types of hauling equipment.

305.4.2 Earthwork for Embankment and Sub-Grade to be Placed Against Sloping Ground

Where an embankment/subgrade is to be placed against sloping ground, the latter shall be appropriately benched or ploughed/scarified as required in Clause 305.4.1 before placing the embankment/sub-grade material. Extra earthwork involved in benching or due to ploughing/ scarifying etc. shall be considered incidental to the work.

For wet conditions, benches with slightly inward fall and subsoil drains at the lowest point shall be provided as per the drawings, before the fill is placed against sloping ground.

Where the Contract requires construction of transverse subsurface drain at the cut-fill interface, work on the same shall be carried out to Clause 309 in proper sequence with the embankment and sub-grade work as approved by the Engineer.

305.4.3 Earthwork over Existing Road Surface

Where the embankment is to be placed over an existing road surface, the work shall be carried out as indicated below:

i) If the existing road surface is of granular type and lies within 1 m of the new formation levels, it shall be scarified to a depth of 50 mm or as directed so as to provide ample bond between the old and new material ensuring that at least 500 mm portion below the top of new sub-grade level is compacted to the desired density;

ii) If the existing road surface is of bituminous type or cement concrete and lies within 1 m of the new formation level, the biturninous or cement concrete layer shall be removed completely;

iii) If the level difference between the existing road surface and the new formation level is more than 1 m, the existing surface shall be roughened after ensuring that the minimum thickness of 500 mm of subgrade is available.

305.4.4 Embankment and Sub-Grade Around Structures

To avoid interference with the construction of abutments, wing walls or return walls of culvert/bridge structures, the Contractor shall, at points, to be determined by the Engineer suspend work on embankment forming approaches to such structures, until such time as the construction of the latter is sufficiently advanced to permit the completion of approaches without the risk of damage to the structure.

Unless directed otherwise, the filling around culverts, bridges and other structures upto a distance of twice the height of the road from the back of the abutment shall be carried out

independent of the work on the main embankment. The fill material shall not be placed against any abutment or wing wall, unless permission has been given by the Engineer but in any case not until the concrete or masonry has been in position for 14 days. The embankment and sub-grade shall be brought up simultaneously in equal layers on each side of the structure to avoid displacement and unequal pressure. The sequence of work in this regard shall be got approved from the Engineer.

The material used for backfill shall not be an organic soil or highly plastic clay having plasticity index and liquid limit more than 20 and 40 respectively when tested according to IS:2720 (Part 5). Filling behind abutments and wing walls for all structures shall conform to the general guidelines given in IRC:78. The fill material shall be deposited in horizontal layers in loose thickness and compacted thoroughly to the requirements of Table 300-2.

Where the provision of any filter medium is specified behind the abutment, the same shall be laid in layers simultaneously with the laying of fill material. The material used for filter shall conform to the requirements for filter medium spelt out in Clause 2504 unless otherwise specified in the Contract.

Where it may be impracticable to use conventional rollers, the compaction shall be carried out by appropriate mechanical means such as small vibratory roller, plate compactor or power rammer. Care shall be taken to see that the compaction equipment does not hit or come too close to any structural member so as to cause any damage to them or excessive pressure against the structure.

305.4.5 Construction of Embankment over Ground Incapable of Supporting Construction Equipment

Where embankment is to be constructed across ground which will not support the weight of repeated heavy loads of construction equipment, the first layer of the fill may be constructed by placing successive loads of material in a uniformly distributed layer of a minimum thickness required to support the construction equipment as permitted by the Engineer. The Contractor, if so desired by him, may also use suitable geosynthetic material to increase the bearing capacity of the foundation. This exception to normal procedure will not be permitted where, in the opinion of the Engineer, the embankments could be constructed in the approved manner over such ground by the use of lighter or modified equipment after proper ditching and drainage have been provided. Where this exception is permitted, the selection of the material and the construction procedure to obtain an acceptable layer shall be the responsibility of the Contractor. The cost of providing suitable traffic conditions for construction equipment over any area of the Contract will be the responsibility of the Contractor and no extra payment will be made to him. The remainder of the embankment shall be constructed as specified in Clause 305.3.

305.4.6 Embankment Construction under Water and Waterlogged Areas

305.4.6.1 Embankment Construction under Water

Where filling or backfilling is to be placed under water, only acceptable granular material or rock shall be used unless otherwise approved by the Engineer. Acceptable granular material shall be of GW, SW, GP, SP as per IS:1498 and consist of graded, hard durable particles with maximum particle size not exceeding 75 mm. The material should be non-plastic having uniformity coefficient of not less than 10. The material placed in open water shall be deposited by end tipping without compaction.

305.4.6.2 Embankment Construction in Waterlogged and Marshy Areas

The work shall be done as per IRC:34.

305.4.7 Earthwork for High Embankment

The material for high embankment construction shall conform to Clause 305.2.1.7. In the case of high embankments (more than 6 m), the Contractor shall normally use fly ash in conformity with Clause 305.2.1.1 or the material from the approved borrow area.

Where provided, stage construction of embankment and controlled rates of filling shall be carried out in accordance with the Contract including installation of instruments and its monitoring.

Where required, the Contractor shall surcharge embankments or other areas of fill with approved material for the periods specified in the Contract. If settlement of surcharged fill results the Contractor shall bring the resultant level up to formation level with acceptable material for use in fill.

305.4.8 Settlement Period

Where settlement period is specified in the Contract, the embankment shall remain in place for the required settlement period before excavating for abutment, wing wall, retaining wall, footings, etc., or driving foundation piles. The duration of the required settlement period at each location shall be as provided for in the Contract or as directed by the Engineer.

305.5 Plying of Traffic

Construction and other vehicular traffic shall not use the prepared surface of the embankment and/or sub-grade without the prior permission of the Engineer. Any damage arising out of such use shall, however, be made good by the Contractor at his own cost as directed by the Engineer.

305.6 Surface Finish and Quality Control of Work

The surface finish of construction of sub-grade shall conform to the requirements of Clause 902. Control on the quality of materials and works shall be exercised in accordance with Clause 903.

305.7 Sub-grade Strength

305.7.1 It shall be ensured prior to actual execution that the material to be used in the sub-grade satisfies the requirements of design CBR.

305.7.2 Sub-grade shall be compacted and finished to the design strength consistent with other physical requirements. The actual laboratory CBR values of constructed sub-grade shall be determined on remoulded samples, compacted to the field density at the field moisture content and tested for soaked/unsoaked condition as specified in the Contract.

305.8 Measurements for Payment

305.8.1 Earth embankment/sub-grade construction shall be measured separately by taking cross sections at intervals given in Sub-Section 113.3 after completion of clearing and grubbing and after completion of embankment/sub-grade. The volume of earthwork shall be computed in cubic metres by the method of average end areas.

305.8.2 The measurement of fill material from borrow areas shall be the difference between the net quantities of compacted fill and the net quantities of suitable material brought from roadway and drainage excavation. For this purpose, it shall be assumed that one cu.m of suitable material brought to site from road and drainage excavation forms one cu.m of compacted fill and all bulking or shrinkage shall be ignored.

305.8.3 The embankment constructed with fly ash will be measured in cu.m, separately for the fly ash portions and for the soil cover and intervening layers of soil, unless otherwise specified in the Contract.

305.8.4 Construction of embankment under water shall be measured in cu.m.

305.8.5 Construction of high embankment with specified material and in specified manner shall be measured in cu.m.

305.8.6 Stripping including storing and reapplication of top soil shall be measured in cu.m.

305.8.7 Work involving loosening and recompacting of ground supporting embankment/sub-grade shall be measured in cu.m.

305.8.8 Removal of unsuitable material at embankment/sub-grade foundation and replacement with suitable material shall be measured in cu.m.

305.8.9 Scarifying existing granular/bituminous road surface shall be measured in square metres.

305.8.10 Dismantling and removal of existing cement concrete pavement shall be measured vide Clause 202.6.

305.8.11 Filter medium and backfill material behind abutments, wing walls and other retaining structures shall be measured as finished work in position in cu.m.

305.9 Rates

305.9.1 The Contract unit rates for the items of embankment and sub-grade construction shall be payment in full for carrying out the required operations including full compensation for:

i) Cost of arrangement of land as a source of supply of material of required quantity for construction unless provided otherwise in the Contract;
ii) Setting out;
iii) Compacting ground supporting embankment/sub-grade except where removal and replacement of suitable material or loosening and recompacting is involved;
iv) Scarifying or cutting continuous horizontal benches 300 mm wide on side slopes of existing embankment and sub-grade as applicable;
v) Cost of watering or drying of material in borrow areas and/or embankment and sub-grade during construction as required;
vi) Spreading in layers, bringing to appropriate moisture and compacting to Specification requirements;
vii) Shaping and dressing top and slopes of the embankment and sub-grade including rounding of corners;
viii) Restricted working at sites of structures;
ix) Working on narrow width of embankment and sub-grade;
x) Excavation in all soils from borrow pits/designated borrow areas including clearing and grubbing and transporting the material to embankment and sub-grade site with all leads and lifts unless otherwise provided for in the Contract;
xi) All labour, materials, tools, equipment and incidentals necessary to complete the work to the Specifications;
xii) Dewatering; and

xiii) Keeping the embankment/completed formation free of water as per Clause 311.

xiv) Transporting unsuitable excavated material for disposal with all leads and lifts.

305.9.2 Clause 301.9.5 shall apply as regards Contract unit rates for items of stripping and storing top soil including reapplication of topsoil.

305.9.3 Clause 301.9.2 shall apply as regards Contract unit rate for the item of loosening and recompacting the embankment/sub-grade foundation.

305.9.4 Clauses 309.1.1 and 305.8 shall apply as regards Contract rates for items of removal of unsuitable material and replacement with suitable material, respectively.

305.9.5 The Contract unit rate for scarifying existing granular/bituminous road surface shall be payment in full for carrying out the required operations including full compensation for all labour, materials, tools, equipment and incidentals, necessary to complete the work. This will also comprise of handling, giving credit towards salvage value and disposal of the dismantled materials with all leads and lifts or as otherwise specified.

305.9.6 Clause 202.7 shall apply as regards Contract unit rate for dismantling and removal of existing cement concrete pavement.

305.9.7 The Contract unit rate for providing and laying filter material shall be payment in full for carrying out the required operations including all materials, labour, tools, equipment and incidentals to complete the work to Specifications.

305.9.8 The Contract unit rate for providing and compacting backfill material behind abutments and retaining walls shall be payment in full for carrying out the required operations including all materials, labour, tools, equipment and incidentals to complete the work to Specifications.

305.9.9 Clause 305.4.6 shall apply as regards Contract unit rate for construction of embankment under water.

305.9.10 Clause 305.4.7 shall apply as regards Contract unit rate for construction of high embankment. It shall include cost of instrumentation, its monitoring and settlement period, where specified in the Contract or directed by the Engineer.

306 SOIL EROSION AND SEDIMENTATION CONTROL

306.1 Description

This work shall consist of measures as shown on drawings or as directed by the Engineer to

control soil erosion, sedimentation and water pollution, through use of berms, dikes, sediment basins, fibre mats, mulches, grasses, slope drains, and other devices.

306.2 Materials

All materials shall meet commercial grade standards and shall be approved by the Engineer before being used in the work

306.3 Construction Operations

Prior to the start of the relevant construction, the Contractor shall submit to the Engineer for approval his schedules for carrying out temporary and permanent erosion/sedimentation control works as are applicable for the items of clearing and grubbing, roadway and drainage excavation, embankment/sub-grade construction, bridges and other structures across water courses, pavement courses and shoulders. He shall also submit for approval his proposed method of erosion/sedimentation control on service road and borrow pits and his plan for disposal of waste materials. Work shall not be started until the erosion/sedimentation control schedules and methods of operations for the applicable construction have been approved by the Engineer.

The surface area of erodible earth material exposed by clearing and grubbing, excavation, borrow and fill operations shall be limited to the extent practicable. The Contractor shall provide immediate permanent or temporary erosion, slope protection and sedimentation control measures to prevent soil erosion and sedimentation that will adversely affect construction operations, damage adjacent properties, or cause contamination of nearby streams or other water courses, lakes, reservoirs etc. Such work may involve the construction of temporary berms, dikes, sediment basins, slope drains and use of temporary mulches, fabrics, mats seeding, or other control devices or methods as necessary to control erosion and sedimentation. Cut and fill slopes shall be seeded and turfed as shown on the drawings.

The Contractor shall be required to incorporate all permanent erosion and sedimentation control features into the project at the earliest practicable time as outlined in his accepted schedule to minimize the need for temporary erosion and sedimentation control measures.

Temporary erosion/sedimentation and pollution control measures shall be used to control the phenomenon of erosion, sedimentation and pollution that may develop during normal construction practices, but may neither be foreseen during design stage nor associated with permanent control features on the Project.

Where erosion or sedimentation is likely to be a problem, clearing and grubbing operations should be so scheduled and performed that grading operations and permanent erosion or sedimentation control features can follow immediately thereafter if the project conditions permit; otherwise temporary erosion or sedimentation control measures may be required

between successive construction stages. Under no conditions shall a large surface area of erodible earth material be exposed at one time by clearing and grubbing or excavation without prior approval of the Engineer.

The Engineer may limit the area of excavation, borrow and embankment operations in progress, commensurate with the Contractor's capability and progress in keeping the finish grading, mulching, seeding and other such permanent erosion, sedimentation and pollution control measures, in accordance with the accepted schedule. Should seasonal limitations make such coordination unrealistic, temporary erosion/sedimentation control measures shall be taken immediately to the extent feasible and justified.

In the event temporary erosion, sedimentation and pollution control measures become necessary due to the Contractor's negligence, carelessness or failure to install permanent controls as a part of the work as scheduled or ordered by the Engineer, these shall be carried out at the Contractor's own cost. Temporary erosion, sedimentation and pollution control work required, which is not attributed to the Contractor's negligence, carelessness or failure to install permanent controls, will be performed as ordered by the Engineer.

Temporary erosion, sedimentation and pollution control may include construction work outside the right-of-way where such work is necessary as a result of road construction such as borrow pit operations, service roads and equipment storage sites.

The temporary erosion, sedimentation and pollution control features installed by the Contractor shall be acceptably maintained by him till these are needed, unless otherwise agreed by the Engineer.

306.4 Measurement for Payment

The soil erosion, sedimentation and pollution control works shall be measured in terms of units specified in the Bill of Quantities for the respective items.

306.5 Rates

The Contract unit rate for different items of soil erosion, sedimentation and pollution control works shall be payment in full for carrying out all required operations including full compensation for all labour, materials, tools, equipment and incidentals to complete the works to the Specifications.

307 TURFING WITH SODS

307.1 Scope

This work shall consist of furnishing and laying of the live sod of perennial turf forming grass on

embankment slopes, verges (earthen shoulders) or other locations shown on the drawings or as directed by the Engineer. Unless otherwise specified, the work shall be taken up as soon as possible following construction of the embankment, provided the season is favourable for establishment of the sod.

307.2 Materials

The sod shall consist of dense, well-rooted growth of permanent and desirable grasses, indigenous to the locality where it is to be used, and shall be practically free from weeds or other undesirable matter. At the time the sod is cut, the grass on the sod shall have a length of approximately 50 mm and the sod shall have been freed of debris.

Thickness of the sod shall be as uniform as possible, with some 50-80 mm or so of soil covering the grass roots depending on the nature of the sod, so that practically all the dense root system of the grasses is retained in the sod strip. The sods shall be cut in rectangular strips of uniform width, not less than about 250 mm x 300 mm in size but not so large that it is inconvenient to handle and transport these without damage. During wet weather, the sod shall be allowed to dry sufficiently to prevent tearing during handling and during dry weather shall be watered before lifting to ensure its vitality and prevent the dropping of the soil in handling.

307.3 Construction Operations

307.3.1 Preparation of the Earth Bed

The area to be sodded shall have been previously constructed to the required slope and cross-section. Soil on the area shall be loosened, freed of all stones larger than 50 mm size, sticks, stumps and any undesirable foreign matter, and brought to a reasonably fine granular texture to a depth of not less than 25 mm for receiving the sod.

Where required, topsoil shall be spread over the slopes. Prior to placing the topsoil, the slopes shall be scarified to a depth which, after settlement, will provide the required nominal depth shown on the drawings. Spreading shall not be done when the ground is excessively wet.

Following soil preparation and top soiling, where required, fertilizer and ground limestone when specified shall be spread uniformly at the rate indicated on the drawings. After spreading, the materials shall be incorporated in the soil by using disc harrow or other means to the depths shown on the drawings.

307.3.2 Placing the Sods

The prepared sod bed shall be moistened to the loosened depth, if not already sufficiently moist, and the sod shall be placed thereon within approximately 24 hours after the same

had been cut. Each sod strip shall be laid edge to edge and such that the joints caused by abutting ends are staggered. Every strip, after it is snugly placed against the strips already in position, shall be lightly tamped with suitable wooden or metal tampers so as to eliminate air pockets and to press it into the underlying soil.

On side slopes steeper than 2 (horizontal) to 1 (vertical), the laying of sods shall be started from bottom upwards. At points where water may flow over a sodded area, the upper edges of the sod strips shall be turned into the soil below the adjacent area and a layer of earth placed over this followed by its thorough compaction.

307.3.3 Staking the Sods

Where the side slope is 2 (horizontal) to 1 (vertical) or steeper and the distance along the slope is more than 2 m, the sods shall be staked with pegs or nails spaced approximately 500 to 1000 mm along the longitudinal axis of the sods strips. Stakes shall be driven approximately plumb through the sods to be almost flush with them.

307.3.4 Top Dressing

After the sods have been laid in position, the surface shall be cleaned of loose sod, excess soil and other foreign material. Thereafter, a thin layer of topsoil shall be scattered over the surface of top dressing and the area thoroughly moistened by sprinkling with water.

307.3.5 Watering and Maintenance

The sods shall be watered by the Contractor for a period of at least four weeks after laying. Watering shall be so done as to avoid erosion and prevent damage to sodded areas by wheels of water tanks.

The Contractor shall erect necessary warning signs and barriers, repair or replace sodded areas failing to show uniform growth of grass or damaged by his operations and shall otherwise maintain the sod at his cost until final acceptance.

307.4 Measurements for Payment

Turfing with sods shall be measured as finished work in square metres.

307.5 Rate

The Contract unit rate for turfing with sods shall mean paying in full for carrying out all the required operations explained above including compensation for

i) furnishing all the materials to be incorporated in the Works with all leads and lifts; and

ii) all labour, tools, equipment and incidentals to complete the work in accordance with these Specifications.

The Contract unit rate for application of topsoil shall be as per Clause 301.9.5.

308 SEEDING AND MULCHING

308.1 Scope

This shall consist of preparing slopes, placing topsoil, furnishing all seeds, commercial or organic fertilizers and mulching materials, providing jute netting, coir netting, or polymer netting and placing and incorporating the same on embankment slopes or other locations designated by the Engineer or shown in the Contract documents.

308.2 Materials

308.2.1 Seeds

The seeds shall be of approved quality and type suitable for the soil on which these are to be applied, and shall give acceptable purity and germination to requirements set down by the Engineer.

Fertilizers shall consist of standard commercial materials and conform to the grade specified. Organic manure shall be fully putrified organic matter such as cow dung.

Mulching materials shall consist of straw, hay, wood shavings, or sawdust and shall be delivered in dry condition suitable for placing with a mulch blower. They shall be reasonably free of weed seed and such foreign materials as may detract from their effectiveness as a mulch or be injurious to the plant growth.

308.2.2 Topsoil

Topsoil shall not be obtained from an area known to have noxious weeds growing in it. If treated with herbicide or sterilents, it shall be got tested by appropriate agricultural authority to determine the residual in the soil. Topsoil shall not contain less than 2 percent and more than 12 percent organic matter.

308.2.3 Bituminous Emulsion

A suitable grade of bituminous emulsion used as a tie down for mulch shall be as described in the Contract document or as desired by the Engineer. Emulsified bitumen shall not contain any solvent or diluting agent toxic to plant life.

308.2.4 Netting

Jute netting shall be undyed jute yarn woven into a uniform open weave with approximate 25 mm square openings.

Geonetting shall be made of uniformly extruded rectangular mesh having mesh opening of 20 mm x 20 mm. The colour may be black or green. It shall weigh not less than 3.8 kg per 1000 sqm.

308.2.5 A layer of biodegradable mulching material sandwiched between two layers of polymer netting or non-woven coconut fibre coir netting can also be used.

308.3 Seeding Operations

308.3.1 Seed-Bed Preparation

The area to be seeded shall be brought to the required slope and cross-section by filling, reshaping eroded areas and refinishing slopes, medians etc. Topsoil shall be evenly spread over the specified areas to the depth shown on the drawings, unless otherwise approved by the Engineer. The seed-bed preparation shall consist of eliminating all live plants by suitable means using agricultural implements. All stones 150 mm and larger shall be removed. The soil shall be excavated on the contour to a depth of 100 mm. All clods larger than 25 mm in diameter shall be crushed and packed. Where necessary, water shall then be applied. All topsoil shall be compacted unless otherwise specified or approved by the Engineer. Compaction shall be by slope compactor, cleated tractor or similar equipment approved by the Engineer. Equipment shall be so designed and constructed as to produce a uniform rough textured surface ready for seeding and mulching and which will bond the topsoil to the underlying material. The entire area shall be covered by a minimum of 4 passes of the roller or approved equipment.

308.3.2 Fertilizer Application

Fertilizer to the required quantities shall be spread and thoroughly incorporated into the soil surface as a part of the seed-bed preparation.

308.3.3 Planting of Seeds

All seeds shall be planted uniformly at the approved rate. Immediately after sowing, the area shall be raked, dragged or otherwise treated so as to cover the seeds to a depth of 6 mm.

The operation of seed sowing shall not be performed when the ground is muddy or when the soil or weather conditions would otherwise prevent proper soil preparation and subsequent operations.

308.3.4 Soil Moisture and Watering Requirements

Soil moisture shall exist throughout the zone from 25 mm to at least 125 mm below the surface at the time of planting.

Watering of the seeded areas shall be carried out as determined by the Engineer.

308.4 Mulching, Applying Bituminous Emulsion and Jute Netting/Geonetting/ Netting of Coir

Within 24 hours of seeding, mulching material mixed with organic manure shall be placed so as to form a continuous, unbroken cover of approximate uniform thickness of 25 mm using an acceptable mechanical blower. Mulching material shall be held in place and made resistant to being blown away by suitable means approved by the Engineer. When called for in the Contract documents, mulch material shall be anchored in place with bituminous emulsion applied at the rate of 2300 litres per hectare. Any mulch disturbed or displaced following application shall be removed, reseeded and remulched as specified. Jute netting/geonetting or netting of coir shall be unrolled and placed parallel to the flow of water immediately following the bringing, to finished grade, the area specified on the drawings or the placing of seed and fertilizer. Where more than one strip is required to cover the given areas, they shall overlap a minimum of 100 mm. Jute netting/Geonetting /coir netting shall be held in place by approved wire staples, pins, spikes or wooden stakes driven vertically into the soil.

308.5 Maintenance

The Contractor shall maintain all seeded and mulched areas until final acceptance. Maintenance shall include protection of traffic by approved warning signs or barricades and repairing any areas damaged following the seeding and mulching operations. If mulched areas become damaged, the area shall be reshaped and then seeded and mulched again as originally specified.

308.6 Measurements of Payment

Seeding and mulching shall be measured as finished work in square metres.

308.7 Rate

The Contract unit rate for seeding and mulching shall be payment in full for carrying out all the required operations including full compensation for all materials, labour, tools and incidentals.

309 SURFACE/SUB-SURFACE DRAINS

309.1 Scope

The work shall consist of constructing surface and/or sub-surface drains in accordance with the requirements of these Specifications and to the lines, grades, dimensions and other particulars shown on the drawings or as directed by the Engineer. Schedule of work shall be so arranged that the drains are completed in proper sequence with road works to ensure that no excavation of the completed road works is necessary subsequently or any damage is caused to these works due to lack of drainage.

309.2 Surface Drains

Surface drains shall be excavated to the specified lines, grades, levels and dimensions to the requirements of Clause 301. The excavated material shall be removed from the area adjoining the drains and if found suitable, utilized in embankment/sub-grade construction. All unsuitable material shall be disposed of as directed.

The excavated bed and sides of the drains shall be dressed to bring these in close conformity with the specified dimensions, levels and slopes.

Where so indicated, drains shall be lined or turfed with suitable materials in accordance with details shown on the drawings.

All works on drain construction shall be planned and executed in proper sequence with other works as approved by the Engineer, with a view to ensuring adequate drainage for the area and minimizing erosion/sedimentation.

309.3 Sub-Surface Drains

309.3.1 Scope

Sub-surface drains shall be of close-jointed perforated pipes, open-jointed unperforated pipes, surrounded by granular material laid in a trench or aggregate drains to drain the pavement courses. Sub-surface drains designed using Geosynthetics and approved by the Engineer can also be used.

309.3.2 Materials

309.3.2.1 Pipe

Perforated pipes for the drains may be metal/asbestos cement/cement concrete/Poly Vinyl

Chloride (PVC)/Poly Propylene (PP)/Poly Ethylene (PE) and unperforated pipes of metal vitrified clay/cement concrete/asbestos cement PVC/PP/PE. The type, size and grade of the pipe to be used shall be as specified in the Contract. In no case, however, shall the internal diameter of the pipe be less than 100 mm. Holes for perforated pipes shall be on one half of the circumference only and conform to the spacing indicated on the drawings. Size of the holes shall not ordinarily be greater than half of D_{85} size of the material surrounding the pipe, subject to being minimum 3 mm and maximum 6 mm. D_{85} stands for the size of the sieve that allows 85 percent of the material to pass through it.

309.3.2.2 Backfill Material

Backfill material shall consist of sound, tough, hard, durable particles of free draining sand-gravel material or crushed stone and shall be free of organic material, clay balls or other deleterious matter. Unless the Contract specifies any particular gradings for the backfill material or requires these to be designed on inverted filter criteria for filtration and permeability to the approval of the Engineer, the backfill material shall be provided on the following lines:

i) Where the soil met with in the trench is of fine grained type (e.g., silt, clay or a mixture thereof), the backfill material shall conform to Class I grading set out in-Table 300-3;

ii) Where the soil met with in the trench is of coarse silt to medium sand or sandy type, the backfill material shall correspond to Class II grading of Table 300-3; and

iii) Where soil met with in the trench is gravelly sand, the backfill material shall correspond to Class III grading of Table 300-3.

Geosynthetics for use with subsurface drain shall conform to the requirements as per Section 700.

309.3.3 Trench Excavation

Trench for sub-surface drain shall be excavated to the specified lines, grades and dimensions shown in the drawings provided that width of trench at pipe level shall not be less than 450 mm. The excavation shall begin at the outlet end of the drain and proceed towards the upper end. Where unsuitable material is met with at the trench bed, the same shall be removed to such depth as directed by the Engineer and backfilled with approved material which shall be thoroughly compacted to the specified degree.

309.3.4 Laying of Pipe and Backfilling

Laying of pipe in the trench shall be started at the outlet end and proceed towards the upper end, true to the lines and grades specified.

Table 300-3 : Grading Requirements for Filter Material Percent Passing by Weight

Sieve Designation	Class I	Class II	Class III
53 mm	-	-	100
45 mm	-	-	97-100
26.5 mm	-	100	-
22.4 mm	-	95-100	58-100
11.2 mm	100	48-100	20-60
5.6 mm	92-100	28-54	4-32
2.8 mm	83-100	20-35	0-10
1.4 mm	59-96	-	0-5
710 micron	35-80	6-18	-
355 micron	14-40	2-9	-
180 micron	3-15	-	-
90 micron	0-5	0-4	0-3

Before placing the pipe, backfill material of the required grading(s) shall be laid for full width of the trench bed and compacted to a minimum thickness of 150 mm or as shown on the drawings. The thickness of the backfill material on the sides of the pipe shall be as shown on the drawings subject to a minimum of 150 mm. The pipe shall then be embedded firmly on the bed.

Perforated pipes, unless otherwise specified, shall be placed with their perforations down to minimize clogging. The pipe sections shall be joined securely with appropriate coupling fittings or bands.

Non-perforated pipes shall be laid with joints as close as possible with the open joints wrapped with suitable pervious material (like suitable Geosynthetics of not less than 150 mm width) to permit entry of water but prevent fines entering the pipes. In the case of non-perforated pipes with bell end, the bell shall face upgrade.

Upgrade end sections of the pipe installation shall be tightly closed by means of concrete plugs or plugs fabricated from the same material as the pipe and securely held in place to prevent entry of soil materials.

After the pipe installation has been completed and approved, backfill material of the required grading (s) (see Clause 309.3.2.2) shall be placed over the pipe to the required level in horizontal layers not exceeding 150 mm in thickness and thoroughly compacted. The minimum thickness of material above the top of the pipe shall be 300 mm.

Unless otherwise provided, sub-surface drains not located below the road pavement shall be sealed at the top by means of 150 mm thick layer of compacted clay so as to prevent percolation of surface water.

309.3.5 Use of Geosynthetics in Laying of Pipe and Backfilling

After excavating the trench for subsurface drain, the filter fabric shall be placed, the pipe installed and the trench backfilled with permeable material according to dimensions and details shown on the drawings. Surfaces to receive filter fabric prior to placing shall be free of loose or extraneous material and sharp objects that may damage the filter fabric during installation. Adjacent rolls of the fabric shall be overlapped a minimum of 450 mm. The preceding roll shall overlap the following roll in the direction the material is being spread.

Damage to the fabric resulting from Contractor's vehicles, equipment or operations shall be replaced or repaired by the Contractor at his Cost.

309.3.6 Drain Outlet

The outlet for a sub-surface drain shall not be under water or plugged with debris but should be a free outlet discharging into a stream, culvert or open ditch. The bottom of the pipe shall be kept above high water level in the ditch and the end protected with a grate or screen. For a length of 500 mm from the outlet end, the trench for pipe shall not be provided with granular material but backfilled with excavated soil and thoroughly compacted so as to stop water directly percolating from the backfill material around the pipe. The pipe in this section shall not have any perforations.

309.3.7 Aggregate Drains

Aggregate drains shall be placed within the verge/shoulders after completion of the pavement. Depth, thickness and spacing of the aggregate drains shall be as shown on the drawings.

Trenches for aggregate drains shall be excavated to a minimum width of 300 mm and to the depth shown on the drawings or ordered by the Engineer. The bottom of the trench shall be sloped to drain and shall be free from loose particles of soil. The trench shall be excavated so as to expose clearly the granular pavement courses to be drained.

Aggregate for the drains shall be durable gravel, stone or slag and shall be free from vegetable matter and other deleterious substances. The grading requirements are given in Table 300-4. Grading to be adopted shall be indicated in the drawings.

Table 300-4 : Grading Requirements for Aggregate Drains

	Percent Passing by Weight	
Sieve Designation	**Type A**	**Type B**
63 mm	-	100
37.5 mm	100	85– 100
19 mm	-	0 – 20
9.5 mm	45 – 100	0 – 5
3.35 mm	25 – 80	-
600 micron	8 – 45	-
150 micron	0 – 10	-
75 micron	0 – 5	-

309.4 Measurements for Payment

Measurement for surface and sub-surface drains shall be per running metre length of the drain.

309.5 Rates

The Contract unit rates for surface and sub-surface drains shall be payment in full for all items such as excavation, dressing the sides and bottom; providing lining, turfing, pitching, masonry, concrete and plastering; providing, laying and jointing pipes including wrapping with geosynthetic fabric; providing, laying and compacting backfill around the pipe, granular bedding; providing, fixing and painting of cover etc. including full compensation for all materials, labour, tools, equipment and other incidentals to complete the work as shown on drawings with all leads and lifts including removal of unsuitable material. Provision of inlets, gratings, sumps, outlet pipes, bedding, disbursers etc. wherever required shall be incidental to construction of drain.

310 PREPARATION AND SURFACE TREATMENT OF FORMATION

Preparation and surface treatment of the formation, shall be carried out only after completion of any specified sub-grade drainage and unless otherwise agreed by the Engineer, immediately prior to laying the sub-base or the road base where no sub-base is required. The sequence of operations shall be as follows:

a) Full formation, after reinstatement of any soft areas to the required Specifications shall be well cleaned and freed of all mud and slurry.

b) The surface shall be compacted to the required density by a smooth wheeled roller of 80 to 100 kN weight after spraying requisite amount of water, if required.

c) the formation shall be finished to the requirements of Clause 305.3.9.

The entire work of surface treatment of formation shall be deemed as incidental to the work of sub-base/base course to be provided for the same.

311 WORKS TO BE KEPT FREE OF WATER

311.1 The Contractor shall arrange for the rapid dispersal of water collected/ accumulated on the earthwork or completed formation during construction or on the existing roadway or which enters the earthwork or any other item of work from any source, and where practicable, the water shall be discharged into the permanent outfall of the drainage system. The arrangements shall be made in respect of all earthwork including excavation for pipe trenches, foundations or cuttings.

311.2 The Contractor shall provide, where necessary, temporary water courses, ditches, drains, pumping or other means for maintaining the earthwork free from water. Such provisions shall include carrying out the work of forming the cut sections and embankments in such manner that their surfaces have at all times a prescribed crossfall and, where practicable, a sufficient longitudinal gradient to enable them to shed water and prevent ponding.

The works involved in keeping the earthwork or any other item of works free of water shall be deemed as incidental to the respective item of work and as such no separate payment shall be made for the same.

312 WATER COURSES AT CULVERTS

312.1 Excavation carried out in the diversion, enlargement, deepening or straightening water courses at culverts, where necessary, shall include the operations such as clearing, grubbing, removal of vegetation, trimming of slopes, grading of beds, disposal of excavated materials, pumping, timbering etc. necessary for dealing with the flow of water.

312.2 The beds and sloping sides of water courses shall, where shown on the drawings, be protected against the action of water by rubble paving to form a flat or curved surface as indicated. The protection shall consist of large smooth faced stones or of blocks of precast concrete. Stones for rubble paving shall be roughly dressed square. No stone shall be less than 225 mm in depth nor less than 0.02 cu.m in volume and no rounded boulders shall be used. After completion of construction of culverts, temporary diversion of water course, if any, shall be closed and water course restored for flow through the culvert as per the direction of the Engineer.

312.3 Measurements for Payment

The work for water courses at culverts as stated above shall be measured in terms of units specified in the Bill of Quantities for respective items. The temporary diversion of channel to facilitate construction of culverts, its closure and restoration to original water course shall be

considered incidental to the work of construction of culverts and no extra payment shall be made for the same.

312.4 Rates

The Contract unit rates for different items of water courses at culverts shall be payment in full for carrying out all required operations including full compensation for all cost of materials, labour, tools, equipment and other incidentals to complete the work to the Specifications.

313 ROCKFILL EMBANKMENT

313.1 Scope

The work covers embankment constructed with pieces of rock and shall be in accordance with the lines, grades and cross-sections as shown in drawings or as directed by the Engineer.

There shall be a minimum of 500 mm thick earthen cushion over the rockfill. The construction of earth fill/ subgrade does not form part of scope of this work.

313.2 Materials

The size of rock pieces used in rockfill embankments shall be such that they can be deposited in layers so as to suit the conditions evaluated in the field compaction trials or as directed by the Engineer. The rockfill shall consist of hard, durable and inert material, preferably maximum size not exceeding 300 mm and percent finer than 125 mm not exceeding10 percent.

Argillaceous rocks (clay, shales etc,), unburnt colliery stock and chalk shall not be used in rockfill.

The rock fragments and blinding material required for filling the voids shall also satisfy the above requirements.

313.3 Spreading and Compaction

The material shall be tipped, spread and levelled in layers extending to the full width of embankment by a suitable dozer. Fragments of rock shall then be spread on the top of layer to the required extent and layer compacted by minimum of 5 passes of vibratory roller having static weight 8-10 tonnes. The compacted thickness of each layer shall not exceed 500 mm. After compaction of each layer, the surface voids shall be filled with broken fragments. Next layer, where required, shall be placed in the same manner, above the earlier compacted layer.

The top layer of rockfill, on which normal earth fill will rest shall be thoroughly blinded with suitable granular material to seal its surface.

313.4 Measurements for Payment

Measurement shall be made by taking cross-sections at intervals in the original position before the work starts and after its completion and computing the volume in cu.m by the method of average end areas.

313.5 Rate

The Contract unit rate shall be paid in full for carrying out all the above operations including cost of rockfill, broken fragments and blinding material and shall provide full compensation for all items as per clause 305.8.

314 GROUND IMPROVEMENT FOR WEAK EMBANKMENT FOUNDATION USING GEOSYNTHETIC DRAINS AND STONE COLUMNS

314.1 Scope

The scope for improving the ground of problematic sub-soil conditions comprises of several alternatives and combination of more than one of the following alternatives. The improvement may be chosen based on the sub-soil conditions :

i) Using geosynthetic drains [Prefabricated Vertical Drain (PVD)] with surcharge involving design and installation of PVD to achieve 90% consolidation of sub-soil within a prescribed time.

ii) Rammed stone columns.

iii) Stone columns formed by vibroflot technique.

Where specified in the Contract the scope of the work shall also cover the design of the ground improvement works by the Contractor.

314.2 Prefabricated Vertical Drain (PVD) with Surcharge

The design and construction of this drain shall generally comply with the requirements of IS:15284 (Part 2) and the requirements given below. In the case of conflict between the requirements of IS:15284 and this Specification, the requirements of this Specification shall prevail.

314.2.1 Materials

i) **Geosynthetic Drain:** Geosynthetic strip or band drain shall be manufactured by an ISO 9001 certified manufacturer. It shall consist of a corrugated or studded or 3-d mesh consisting of an inner core of thick polyester fused at intersection, wrapped in a non-woven geotextile. Band drain shall be of width and thickness as specified in the design and shall be a minimum of 100 mm width and 5 mm thickness. The core shall serve as the drainage medium conveying the core water from the soft subsoil to the drainage layer at the top. The core shall be of three-dimensional mesh, made of polyester or equivalent. The filter should be non-woven needle punched adhesive-bonded fabric. The filter and the core shall be ultrasonically welded together at edges to produce a fully integrated product. The drain shall meet the properties specified in Table 700-3.

The drains shall be installed to depths and at spacing as per the design and drawings. The Contractor shall submit to the Engineer the complete scheme for installation of vertical band drains alongwith the particulars and test results from the manufacturer showing conformance to the specifications. Unless specified otherwise, the design of the ground improvement measures shall be to achieve 90 percent consolidation in the time prescribed by the employer. The equipment and the methodology for installation of the drains shall satisfy the specified requirement of prescribed degree of consolidation and the time for achieving the same.

ii) **Granular Sand Blanket :** After installation of the vertical band drains in the sub-soil, a blanket of well draining granular material/coarse sand (natural or crushed) conforming to Class I grading given in Table 300-4 of specified thickness compacted to a density of 75 to 80 percent of maximum dry density obtained by heavy compaction (IS:2720-Part 8) shall be provided. The granular sand blanket shall be exposed to atmosphere at its periphery for dissipation of pore water pressure

iii) **Geotextile Fabric for Separation and Drainage :** The requirements of synthetic geotextile shall be as given in Table 700-1.

314.2.2 Construction and Installation Requirements

i) **Shipment and Storage :** The Geosynthetic Band Drain shall be dry and wrapped such that it is protected from the exposure to ultraviolet light during shipping and storage. At no time shall the band drain be exposed to ultraviolet light for a period exceeding fourteen days. If stored outdoor, they shall be elevated and protected with a waterproof

cover. The Geo-synthetic Band Drain shall be labeled as per ASTM D 4873, "Guide for identification, storage, and handling of geotextile.

ii) **Drain Installation :** Band Drains in roll shall be installed using an installation rig/sticher mounted on a base machine (Hydraulic or Mechanical). The end of the drain shall be attached to a hollow rectangular mandrel or shoe, which will be driven into the soft clay by appropriate mechanism, such as lance. On reaching the refusal strata (stiff soil), the mandrel with the drain shall be left behind and the lance withdrawn. The top of the drain above the ground level shall be cut off at design level (150 mm into the drainage blanket). The rig/ sticher moves on to the next location.

iii) After installation of vertical band drains, a blanket of granular coarse sand as mentioned above shall be spread over the entire area and covered with geotextile layer on top and bottom as directed by the Engineer.

iv) **Installation of geotextile fabric for separation and drainage :**

a) **Shipment and Storage :** The geotextile shall be kept dry and wrapped such that it is protected from the exposure to ultraviolet light during shipping and storage. At no time shall the paving fabric be exposed to ultraviolet light for a period exceeding fourteen days. Geotextile rolls shall be stored in a manner, which protects them from elements. If stored outdoor, they shall be elevated and protected with a waterproof cover. The geotextile shall be labeled as per ASTM D 4873, "Guide for identification, storage and handling of geotextiles".

b) **Fabric Placement :** The geotextile shall be laid smooth without wrinkles or folds on the sand blanket in the direction of construction traffic. Adjacent geotextile rolls shall be overlapped, sewn or jointed, (Preferably sewn or joined). On curves the geotextile may be folded or cut & overlap to conform to the curves. The fold or overlap shall be in the direction of construction and held in place by pins, staples, or piles of fill or rock. Prior to covering, the geotextile shall be inspected by the Engineer to ensure that the geotextile has not been damaged (i.e. holes, tears, rips) during installation. Damaged geotextiles, as identified by the Engineer, shall not be allowed. The surcharge shall be placed such that atleast the minimum specified lift thickness shall be between the geotextile and the equipment tyres or tracks at all times. Turning of vehicles shall not be permitted on the first lift above the geotextile.

c) **Seaming :** A sewn seam is to be used for the seaming of the geotextile. The thread used shall consist of high strength polypropylene or polyester. Nylon thread shall not be used. The thread shall also be resistant to ultraviolet radiation. The thread shall be of contrasting color to that of the geotextile itself. For seams which are sewn in the field, the Contractor shall provide at least a 2 m length sewn seam for sampling by the Engineer before the geo-textile is installed. For seams which are sewn in the factory, the Engineer shall obtain samples of the factory seams at random from any roll of geotextile which is used on the project. For seams that are field sewn, the seams sewn for sampling shall be sewn using the same equipment and procedures as will be used for the production seams. If seams area sewn in both the machine and cross machine direction, samples of seams from both directions shall be provided. The seam assembly description shall be submitted by the Contractor along with the sample of the seam. The description shall include the seam type, stitch type, sewing thread and stitch density.

v) **Addition of Surcharge :** Addition of surcharge load by approved embankment material shall be placed over the geotextile layer upto a height as per the design requirement. The addition of surcharge shall be placed with adequate side slope to avoid any slope failure. The addition of surcharge shall be kept in place for a period as per the design to achieve desired degree of consolidation. After ascertaining that the desired degree of consolidation is achieved, the addition of surcharge which is not forming part of permanent work/ embankment shall be removed to the required level as per drawings. Removal of additional surcharge material shall be done without damaging the road embankment. After removal of additional surcharge, the damaged embankment top, if any, shall be made good as instructed by the Engineer. The addition and removal of surcharge shall be incidental to the work except for payment of additional surcharge quantity forming part of permanent embankment. The quantity for payment will be determined based on the settlements readings observed through instrumentation.

vi) **Instrumentation and Monitoring the Behaviour of Sub-Soil/ Embankment :** Monitoring the behavior of the sub-soil/ embankment construction shall form part of the work. The design shall be based on the gain in the shear strength of the subsoil due to consolidation process. The following critical parameters shall be monitored :

a) **Monitoring the Build up and Dissipation of Pore Pressure:** Casagrande open standpipe type piezometers shall be used for

the measurement of changes in pore pressure. The specifications for the Casagrande piezometer shall be as follows.

The piezometer shall be 38 mm in dia and 300 mm in length;

The air entry value shall be of the order of 0.3 kg/cm^2.

The standpipe shall be more than 16 mm in diameter;

The piezometer shall be installed in 150 mm borehole, at specified depths. Sand cover around the piezometer tip and bentonite seal above shall be provided; and

Suitable electronic sensor shall be used to record the water level

Piezometers including dummy piezometers shall be installed at locations specified by the Engineer.

b) **Rate and Magnitude of Vertical Settlements of the Subsoil under the Surcharge Load :** Settlements shall be measured by installing platform type settlement gauges, which consist of the following :

Wooden base plate 1000 mm square and 50 mm thick;

GI pipe of 25 mm dia fitted to the base plate with a suitable sleeve arrangement and nuts and bolts;

Outer loose fitting sleeve, to prevent soil form coming into contact with the inner pipe;

The pipe and the sleeve consist of 1.5 m long sections, which can be screwed on at the top, so that as the surcharge is built up, the top of the pipe is well clear of the fill;

Settlement gauges shall be installed at the ground level, before the starting of the fill construction. These shall be installed locations specified by the Engineer. The readings of settlement gauges also form the basis to estimate the quantity of surcharge forming part of permanent work. The number of settlement gauges shall be decided by the Engineer keeping in view this aspect.

c) **Measurement of Shear Strength :** The shear strength parameters of the subsoil [unconfined compressive strength (UCS)] shall be measured at locations specified by the Engineer at the end of each stage of surcharge loading in order to compare the actual details with the design assumptions. For the recovery of undisturbed samples from the subsoil for determining UCS, before start of construction of surcharge, 100 mm dia casing pipe shall be installed into the ground to 3 m depth, preferably by driving; the top of the casing pipe shall have provision for adding extensions

at top by screw coupling; and as the surcharge construction proceeds the casing pipe shall be extended. This procedure ensures avoiding drilling through the surcharge already placed as well as any damage to the installed band drains. Undisturbed samples (UDS) are recovered and UCS is determined in the site laboratory (sending UDS sample to distant laboratories would result in loss of water content and disturbance of the samples leading to erroneous values of UCS). Undisturbed samples shall be recovered at every 1.5 m depth at the specified locations, so that complete strength profile of subsoil is obtained.

vii) During the placing of the surcharge and compaction, the Contractor shall take utmost care so that the monitoring instruments are not damaged. Compaction by small vibratory rollers shall be done for 1.5 m around the monitoring instruments and bigger rollers shall not be used near the monitoring instruments. Similarly care shall be taken that movement of dumpers does not damage the monitoring instruments.

viii) **Frequency of Observations :** The readings of the piezometers and the settlement gauges shall be recorded at the following frequency.

a) Daily reading shall be taken in stretches where filling/ surcharge operations are in progress. Weekly readings shall be taken in stretches, where no filling/ surcharge is being done.

b) Weekly readings shall be taken after the desired fill/ surcharge height is achieved, till the next stage filling commences. All data shall be recorded in a register and maintained properly.

c) The Data from the monitoring instruments provides the background for regulating the rate of placing the fill/ surcharge as well as the waiting period between stages.

ix) **Precautions against Pilferage:** The observation data shall be recorded during construction and for three months thereafter. It is therefore essential that the instruments are not tampered and stolen. Suitable precautions shall be taken in this regard by the Contractor.

x) **Drainage of Ground Water :** The water which will come out from the subsoil through vertical drains will be accumulated at temporary ditches to be dug at nearby areas and the accumulated water will be dewatered regularly from the ditches to the outfalls as directed by the Engineer.

xi) **Certification from the Manufacturer of Band Drain and Geotextile Fabric for Separation and Drainage :**

a) The Contractor shall provide to the Engineer, a certificate stating the name of the manufacturer, product name, style number, chemical composition of the filament or yarns and other pertinent

information to fully describe the material. Each roll shall be labelled or tagged to protect product identification as well as inventory and quality control.

b) The manufacturer shall be responsible for establishing and maintaining a quality control programme to assure compliance with the requirement of the specification. Documentation describing the quality control programme shall be made available upon request.

c) The manufacturer's certificate shall state that the furnished material meets minimum averages roll values (MARV) requirements of the specifications as evaluated under the Manufacturer's quality control programme. The certificate shall be attested by a person having legal authority to bind the Manufacturer.

314.2.3 Measurements for Payment

i) The Geosynthetic Band Drains (or geodrain) shall be measured in linear metre of its length.

ii) The granular sand blanket shall be measured in cubic metre.

iii) The geo-synthetic fabric shall be measured in square metre of plan area of final finished work.

iv) Instrumentation and monitoring the behaviour of sub-soil/ embankment shall be measured in number of locations.

v) The additional surcharge quantity forming part of permanent embankment shall be measured in cum.

The overlaps, patches, sewn seams and securing pins shall not to be measured.

314.2.4 Rate

Rate shall include cost of design, materials, installation, operations involved in pre-loading/ additional surcharge, dewatering, labour, plant hire, material storage and handling expenses for completing the work including submission of construction drawings and provision of specialist attendance & supervision at site for (i) geodrain; (ii) sand blanket; (iii) geofabric; (iv) instrumentation and monitoring; and (v) permanent embankment part of surcharge as described above.

314.3 Rammed Stone Columns using Non-Displacement Method of Construction

314.3.1 The design and construction of this column shall generally comply with the requirements of IS:15284 (Part 2), including the requirements given below. In the case of

conflict between the requirements of IS:15284 and these Specifications the requirements of these Specifications shall prevail.

314.3.2 Stone columns shall be formed from well-graded crushed stone and gravel compacted to a dense state. The size of the well graded crushed aggregate shall vary from 2 mm to 75 mm conforming to the gradation given below.

Size of the Crushed Aggregate	% Passing
75 mm	90-100
50 mm	80-90
38 mm	55-75
20 mm	10-20
12 mm	5-13
2 mm	5

The crushed aggregate shall be chemically inert, hard and resistant to breakage. The diameter of the stone columns shall be as shown in the drawings.

314.3.3 Granular Blanket

A compacted and well draining layer of gravel or coarse sand, of specified thickness, compacted in layers to a relative density of 75 to 80 percent shall be provided above the existing ground. This blanket shall be exposed to atmosphere at its periphery for pore water pressure dissipation.

314.3.4 Construction and Installation Requirements

The "Rammed Stone Columns" shall be constructed by non-displacement technique namely "Bailer and Casing Method" as given in IS:15284 (Part 1). After ensuring complete removal of slush deposited during boring operations, a minimum depth of 0.5 m, preferably 0.75 below the granular blanket shall be compacted by other suitable means such as rolling/ tamping to the specified densification criteria.

314.3.5 Field Controls

In the above method, the following minimum field controls shall essentially be observed.

The set criteria and the consumption of granular fill form the main quality control measures for the columns constructed by the non-displacement technique. The set criteria shall be established as given in IS:15284 (Part 1). For ascertaining the consumption of fill, the diameter of the column as formed during field trials shall be measured in its uppermost part along the four diameters and average of these observations taken as the column diameter.

314.3.6 Field Loading Tests

Initial and routine tests shall be carried out as given in IS:15284 (Part 1).

314.3.7 Recording of Data shall be done as given in IS:15284 (Part 1).

314.3.8 Load Test Results

The ultimate load capacity of single column shall be determined form load tests. The settlement of a stone column obtained at safe/ working load from load test results on a single column shall not be directly used in forecasting the settlement of the structure unless experience form similar foundations in similar soil conditions on its settlement behaviour is available. The average settlement may be assessed on the basis of sub-soil data and loading details of the structures as a whole using the principles of soil mechanics.

314.3.9 Certification

The Contractor shall be responsible for establishing and maintaining a quality control programme to assure compliance with the requirements of the specifications.

314.3.10 Measurement for Payment

i) The rammed stone column of the specified diameter shall be measured in linear metre of its compacted length.

ii) The sand blanket shall be measured in cu.m.

iii) The initial and routine load tests, unless otherwise specified in the contract, shall be measured in numbers and paid.

314.3.11 Rate

The rate shall include the cost of providing all materials, tools, equipment, labour, supervision and incidentals necessary to complete the work as per these specifications.

314.4 Stone Columns using Vibro-replacement (Vibroflot) Method of Construction

314.4.1 Scope

The scope of the work shall consist of:

i) construction of stone columns, complete in-place including layout;

ii) supplying crushed stone, equipment, electrical power, water and any other necessary items for stone column and its installation;

iii) Control and disposal of surface water resulting from stone column construction operations;

iv) Construction and removal of silt settling ponds or similar facilities as required, and the regrading of the site as required;

v) Stockpiling and disposal of silt from the site if necessary; and

vi) Load testing of stone columns as specified

314.4.2 The design and construction of stone columns shall comply with IS:15284 (Part I) subject to certain modifications incorporated in these Specifications or any other modification suggested by the Engineer. The construction of sand (or stone) working platform and necessary access to site shall not form part of the scope of this work. Stone Column with maximum compacted density shall extend to the full depth of the compressible stratum and reach the Dense Sand Layer/Stiff Clay Layer.

314.4.3 The Contractor shall (i) meet all applicable laws and regulations concerning surface runoff, siltation, pollution and general disposal of the effluent from the construction of the stone columns and general site work, (ii) construct and relocate temporary ditches, swales, banks, dams, and similar facilities as necessary to control the flow of surface water during the work, remove them when no longer required, and regrade the affected areas for acceptable drainage as specified for site grading, (iii) construct silt settling ponds as required in locations indicated or approved, ensure that earth banks and water control devices are safely designed and prevent inadvertent discharge into watercourses off the site, stockpile and dispose of all silt as approved by the Engineer, (iv) remove settling ponds and other structures when no longer required and regrade the areas for acceptable drainage as specified for site grading.

314.4.4 Materials

a) **Stone Aggregate for Compacted Column :** The crushed stone and gravel for column backfill shall be clean, hard, angular, chemically inert, resistant to breakage and free from organic, trash, or other deleterious materials. It shall be well-graded stones of 75 mm down to 2 mm size. The uniformity co-efficient shall be greater than 3. The Aggregate Impact Value shall not be more than 30 percent.

b) **Drainage Blanket :** Sand/crushed stone, which is hard, inert, resistant to chemical change and free from organic, trash, or other deleterious materials shall only be used in drainage blanket. The blanket shall be well graded and free draining granular material of thickness 500 mm or more, compacted in layers to a relative density of 75 to 80 percent. This blanket shall be exposed to atmosphere at its periphery for pore water pressure dissipation.

314.4.5 Construction and Installation

The stone columns shall be installed by Vibroflot method given in IS:15284 (Part 1). Stones shall be fed by mechanical means i.e. use of loader/ hopper/ chute etc. The slush, muck and other loose materials at work site shall be removed/ disposed off suitably by the Contractor as instructed by the Engineer. The Contractor shall take adequate measures to ensure stability of bore holes made for installation of stone column.

314.4.5.1 A detailed installation procedure/method statement shall be submitted by the Contractor including:

i) Type and number of Vibroflots and general method of operation including construction schedule.

ii) Mechanical arrangement for placing stones (s) around the probe point

iii) Quality control, Quality Assurance Procedure covering details on automatic recording devices to monitor and record stone consumption

iv) Type of equipment to be deployed

v) Manpower to be engaged

vi) The proposed sequence and timing for constructing stone columns along with a bar chart for the entire ground improvement work.

314.4.5.2 Stone column installation procedure shall be as approved by the Engineer. The construction technique and probe shall be capable of producing and/or complying with the following:

i) The holes shall be close to circular.

ii) The probe and follower tubes shall be of sufficient length to reach the elevations shown on the plans. The probe, used in combination with the flow rate and available pressure to the tip jet, shall be capable of penetrating to the required tip elevation. Preboring of stiff lenses, layers or strata is permitted.

iii) The probe shall have visible external markings at suitable increments to enable measurement of penetration and re-penetration depths

iv) Sufficient quantity of wash water shall be provided to the tip of the probe to widen the probe hole to a diameter to allow adequate space for stone backfill placement around the probe. The flow of water from the bottom jet shall be maintained at all times during backfilling to prevent caving or collapse of the hole and to form a clean stone column. The flow rate will generally be greater as the hole is jetted in, and decrease as the stone column comes up

v) After forming the hole, the vibrator shall be lifted up a minimum 3 m, dropped at least twice to flush the hole out. The probe shall not, however, be completely removed from the hole

vi) The column shall be formed by adding stone in lifts having each lift height between 600 cm and 1000 cm. The stone aggregate in each lift shall be compacted by re-penetrating it at least twice with the horizontally vibrating probe so as to densify and force the stone radially into the surrounding in-situ soil. The stone in each increment shall be re-penetrated a sufficient number of times to develop a minimum ammeter reading on the motor of at least 40 amps more than the free-standing (unloaded) ampere draw on the motor, but no less than 80 amps total

vii) Stone columns shall be installed so that each completed column will be continuous throughout its length

314.4.5.3 Data captured shall be continuously displayed on a LCD unit and graphical output (plots of depth versus time and power consumption) generated by automated computerized recording device throughout the process of stone column installation for each point shall be submitted to the Engineer.

The equipment to be used shall be instrumented with sensors and the data processed by a micro-processing unit to enable continuous monitoring and data capture of the following during construction of each stone column:

a) depth of vibrator and vibrator movements (depth of penetration)

b) power consumption (compaction effort)

314.4.5.4 If erosion of upper granular working platform material occurs, the depressions shall be backfilled with sand/ granular material which meets the specification for the working platform. Such backfilling shall be at the Contractor's expense. The working surface shall be cleaned at the completion of the stone column construction of all unsuitable materials washed up from the stone column holes. Such unsuitable materials include clay or silt lumps, wood fragments or other organic matter. If, in the opinion of the Engineer, these materials create "soft spots" or zones of compressibility or weakness in connection with the placement of overlying embankment materials, such unsuitable materials shall be disposed of in a manner approved by the Engineer

314.4.5.5 In the event of obstructions preventing the penetration of the Vibrofloat, the Contractor shall stop work, move to another compaction point and immediately notify the Engineer. The Engineer may at his option authorize one or several of the following: (i) position the compaction point a short distance away from the original position, (ii) additional compaction points to bridge the obstruction, (iii) remove the obstruction, replace removed soils, and again jet the column hole in the indicated location, (iv) perform other removal or relocation operations or (v) any other method.

314.4.6 Field Controls

In the above method, the following minimum field controls shall be observed.

a) Vibrofloat penetration depth including the depth of embedment in firm strata.

b) Monitoring of volume of backfill added to obtain an indication of the densities achieved, and

c) Monitoring of ammeter or hydraulic pressure gauge readings to verify that the maximum possible density has been achieved in case of Vibrofloated columns.

314.4.7 Recording of Data shall be done as given in IS:15284 (Part 1).

314.4.8 Field Loading Tests

314.4.8.1 The Initial load tests shall be performed at a trial test site approved by the Engineer to evaluate the load-settlement behaviour of the soil-stone column system. The tests shall be conducted on a single and also on a group of minimum three columns in accordance with IS:15284 (Part-1). The number of initial tests shall be as follows:

Single column tests – 1 test per 500 or part thereof stone columns.

Three column group tests – 1 test per 1000 or part thereof stone columns.

314.4.8.2 The Routine load tests shall be carried out on a single job column in accordance with IS:15284 (Part-1). The job columns shall be loaded for a test load of 1.1 times the design load intensity with kentledge minimum 1.3 times the design load pattern. The number of routine tests shall be as follows:

Single column tests – 1 test per 500 or part thereof stone columns.

314.4.8.3 The test load shall be applied at increments of one-tenth to one-fifth of the design load upto a maximum of 1.5 times the design load. Each load stage shall be maintained till the settlement rate is less than 0.1 mm/30 min.

314.4.8.4 The test load shall be maintained for a minimum period of 24 hours. The ultimate load on the stone column shall be determined by double tangent diagram. The test load shall be removed in five to six stages. Each unloading stage shall be maintained till the rebound attains a rate of 2.0 mm/30 min.

314.4.8.5 Safe and efficient working of the loading arrangements is entirely the Contractor's responsibility and any impediment resulting in the failure of the test arrangement may debar the Contractor from payment for the test. Alternatively, it may make the Contractor liable to repeat the test on separate column/columns without any extra cost.

314.4.8.6 The construction of stone columns shall be carried out using the same procedure as adopted for the test column to the satisfaction of the Engineer. The stone columns under the test shall be a part of a larger stone column group. The interpretation of the results shall be free from ambiguity and shall be subject to the Engineer's approval. No works shall proceed unless the Contractor shall satisfy the Engineer beyond reasonable doubt that the performance of the stabilized soil material will be compliant with the Specification.

314.4.9 Tolerances

314.4.9.1 Setting Out

Setting out shall be carried out from reference lines and points shown in the drawings. Immediately before installation of the stone columns, the stone column positions shall be marked with suitable identifiable markers.

314.4.9.2 Position

No vibration center or stone column shall be more than 150 mm off its correct center location in any direction at the working platform level as shown on the approved plans.

314.4.9.3 Verticality

Stone Columns shall be constructed as vertical as possible. The axis of the stone column shall not be inclined from the vertical by more than 1h: 20v as indicated by the tilt of vibrator and follower tubes.

314.4.10 Personnel

The Contractor shall employ suitable personnel having experience in the construction of stone columns.

314.4.11 Quality Control

The Contractor shall establish and maintain a quality control programme to assure compliance with the requirements of the specifications.

314.4.12 Measurements for Payment

i) The stone column by Vibrofloat method shall be measured in linear metre of its compacted length.

ii) The sand blanket shall be measured in cu.m.

iii) The initial and routine load tests, unless otherwise specified in the Contract, shall be measured in numbers and paid.

314.4.13 Rate

The rate shall include the cost of providing all materials, tools, equipment, labour, supervision and incidentals necessary to complete the work as per these Specifications.

400

SUB-BASES, BASES (NON-BITUMINOUS) AND SHOULDERS

401 GRANULAR SUB-BASE

401.1 Scope

This work shall consist of laying and compacting well-graded material on prepared subgrade in accordance with the requirements of these Specifications. The material shall be laid in one or more layers as sub-base or lower sub-base and upper sub-base (termed as sub-base hereinafter) as necessary according to lines, grades and cross-sections shown on the drawings or as directed by the Engineer.

401.2 Materials

401.2.1 The material to be used for the work shall be natural sand, crushed gravel, crushed stone, crushed slag, or combination thereof depending upon the grading required. Use of materials like brick metal, Kankar and crushed concrete shall be permitted in the lower sub-base. The material shall be free from organic or other deleterious constituents and shall conform to the gradings given in Table 400-1 and physical requirements given in Table 400-2. Gradings III and IV shall preferably be used in lower sub-base. Gradings V and VI shall be used as a sub-base-cum-drainage layer. The grading to be adopted for a project shall be as specified in the Contract. Where the sub-base is laid in two layers as upper sub-base and lower sub-base, the thickness of each layer shall not be less than 150 mm.

401.2.2 If the water absorption of the aggregates determined as per IS:2386 (Part 3) is greater than 2 percent, the aggregates shall be tested for Wet Aggregate Impact Value (AIV) (IS:5640). Soft aggregates like Kankar, brick ballast and laterite shall also be tested for Wet AIV (IS:5640).

Table 400-1 : Grading for Granular Sub-base Materials

IS Sieve Designation	Percent by Weight Passing the IS Sieve					
	Grading I	Grading II	Grading III	Grading IV	Grading V	Grading VI
75.0 mm	100	-	-	-	100	-
53.0 mm	80-100	100	100	100	80-100	100
26.5 mm	55 –90	70-100	55-75	50-80	55-90	75-100
9.50 mm	35-65	50-80	–	–	35-65	55-75
4.75 mm	25 – 55	40-65	10-30	15-35	25-50	30-55
2.36 mm	20- 40	30-50	–	–	10-20	10-25
0.85 mm	–	–	–	–	2-10	–
0.425 mm	10-15	10- 15	–	–	0-5	0-8
0.075 mm	<5	< 5	< 5	< 5	–	0-3

Table 400-2 : Physical Requirements for Materials for Granular Sub-base

Aggregate Impact Value (AIV)	IS:2386 (Part 4) or IS:5640	40 maximum
Liquid Limit	IS:2720 (Part 5)	Maximum 25
Plasticity Index	IS:2720 (Part 5)	Maximum 6
CBR at 98% dry density (at IS:2720-Part 8)	IS:2720 (Part 5)	Minimum 30 unless otherwise specified in the Contract

401.3 Construction Operations

401.3.1 Preparation of Sub-grade

Immediately prior to the laying of sub-base, the subgrade already finished to Clause 301 or 305 as applicable shall be prepared by removing all vegetation and other extraneous matter, lightly sprinkled with water, if necessary and rolled with two passes of 80–100 kN smooth wheeled roller.

401.3.2 Spreading and Compacting

The sub-base material of the grading specified in the Contract and water shall be mixed mechanically by a suitable mixer equipped with provision for controlled addition of water and mechanical mixing. So as to ensure homogenous and uniform mix. The required water content shall be determined in accordance with IS:2720 (Part 8). The mix shall be spread on the prepared subgrade with the help of a motor grader of adequate capacity, its blade having hydraulic controls suitable for initial adjustment and for maintaining the required slope and grade during the operation, or other means as approved by the Engineer.

Moisture content of the mix shall be checked in accordance with IS:2720 (Part 2) and suitably adjusted so that, at the time of compaction, it is from 1 to 2 percent below the optimum moisture content.

Immediately after spreading the mix, rolling shall be done by an approved roller. If the thickness of the compacted layer does not exceed 100 mm, a smooth wheeled roller of 80 to 100 kN weight may be used. For a compacted single layer upto 200 mm the compaction shall be done with the help of a vibratory roller of minimum 80 to 100 kN static weight capable of achieving the required compaction. Rolling shall commence at the lower edge and proceed towards the upper edge longitudinally for portions having unidirectional crossfall or on super-elevation. For carriageway having crossfall on both sides, rolling shall commence at the edges and progress towards the crown.

Each pass of the roller shall uniformly overlap not less than one-third of the track made in the preceding pass. During rolling, the grade and crossfall (camber) shall be checked and any high spots or depressions which become apparent, corrected by removing or adding fresh material. The speed of the roller shall not exceed 5 km per hour.

Rolling shall be continued till the density achieved is at least 98 percent of the maximum dry density for the material determined as per IS:2720 (Part 8). The surface of any layer of material on completion of compaction shall be well closed, free from movement under compaction equipment and from compaction planes, ridges, cracks or loose material. All loose, segregated or otherwise defective areas shall be made good to the full thickness of layer and re-compacted.

401.4 Surface Finish and Quality Control of Work

The surface finish of construction shall conform to the requirements of Clause 902. Control on the quality of materials and works shall be exercised by the Engineer in accordance with Section 900.

401.5 Arrangements for Traffic

During the period of construction, arrangements for the traffic shall be provided and maintained in accordance with Clause 112.

401.6 Measurements for Payment

Granular sub-base shall be measured as finished work in position in cubic metres.

The protection of edges of granular sub-base extended over the full formation as shown in the drawing shall be considered incidental to the work of providing granular sub-base and as such no extra payment shall be made for the same.

401.7 Rate

The Contract unit rate for granular sub-base shall be payment in full for carrying out the required operations including full compensation for:

i) making arrangements for traffic to Clause 112 except for initial treatment to verges, shoulders and construction of diversions;

ii) supplying all materials to be incorporated in the work including all royalties, fees, rents where applicable with all leads and lifts;

iii) all labour, tools, equipment and incidentals to complete the work to the Specifications;

iv) carrying out the work in part widths of road where directed; and

v) carrying out the required tests for quality control.

402 LIME TREATED SOIL FOR IMPROVED SUB-GRADE/SUB-BASE

402.1 Scope

This work shall consist of laying and compacting an improved sub-grade/lower sub-base of soil treated with lime on prepared sub-grade in accordance with the requirements of these Specifications and in conformity with the lines, grades and cross-sections shown on the drawings or as directed by the Engineer. Lime treatment is generally effective for soils which contain a relatively high percentage of clay and silty clay.

402.2 Materials

402.2.1 Soil

Except when otherwise specified, the soil used for stabilization shall be the local clayey soil having a plasticity index greater than 8.

402.2.2 Lime

Lime for lime-soil stabilization work shall be commercial dry lime slaked at site or pre-slaked lime delivered to the site in suitable packing. Unless otherwise permitted by the Engineer, the lime shall have purity of not less than 70 percent by weight of Quick-lime (CaO) when tested in accordance with IS:1514. Lime shall be properly stored to avoid prolonged exposure to the atmosphere and consequent carbonation which would reduce its binding properties.

402.2.3 Quantity of Lime in Stabilized Mix

Quantity of lime to be added as percentage by weight of the dry soil shall be as specified in the Contract. The quantity of lime used shall be related to its calcium oxide content which shall be specified. Where the lime of different calcium oxide content is to be used, its quantity shall be suitably adjusted with the approval of the Engineer so that equivalent calcium oxide is incorporated in the work. The mix design shall be done to arrive at the appropriate quantity of lime to be added, having due regard to the purity of lime, the type of soil, the moisture-density relationship, and the design CBR/Unconfined Compressive Strength (UCS) value specified in the Contract. The laboratory CBR/UCS value shall be at least 1.5 times the minimum field value of CBR/UCS stipulated in the Contract.

402.2.4 Water

The water to be used for lime stabilisation shall be clean and free from injurious substances. Potable water shall be used.

402.3 Construction Operations

402.3.1 Weather Limitations

Lime-soil stabilisation shall not be done when the air temperature in the shade is less than 10°C.

402.3.2 Degree of Pulverisation

For lime-soil stabilisation, the soil before addition of stabilizer, shall be pulverized using agricultural implements like disc harrows (only for low volume roads) and rotavators to the extent that it passes the requirements set out in Table 400-3 when tested in accordance with the method described in Appendix-3.

Table 400-3 : Soil Pulverisation Requirements for Lime Stabilisation

IS Sieve designation	Minimum percent by weight passing the IS Sieve
26.5 mm	100
5.6 mm	80

402.3.3 Equipment for Construction

Stabilised soil sub-bases shall be constructed by mix-in-place method of construction or as otherwise approved by the Engineer. Manual mixing shall be permitted only where the width of laying is not adequate for mechanical operations, as in small-sized jobs.

The equipment used for mix-in-place construction shall be a rotavator or similar approved equipment capable of pulverizing and mixing the soil with additive and water to specified degree to the full thickness of the layer being processed, and of achieving the desired degree of mixing and uniformity of the stabilized material. If so desired by the Engineer, trial runs with the equipment shall be carried out to establish its suitability for work.

The thickness of any layer to be stabilized shall be not less than 100 mm when compacted. The maximum thickness can be 200 mm, provided the plant used is accepted by the Engineer.

402.3.4 Mix-in-place Method of Construction

Before deploying the equipment, the soil after it is made free of undesirable vegetation or other deleterious matter shall be spread uniformly on the prepared subgrade in a quantity sufficient to achieve the desired compacted thickness of the stabilised layer. Where single-pass equipment is to be employed, the soil shall be lightly rolled as directed by the Engineer.

The equipment used shall either be of single-pass or multiple pass type. The mixers shall be equipped with an appropriate device for controlling the depth of processing and the mixing blades shall be maintained or reset periodically so that the correct depth of mixing is obtained at all times.

With single-pass equipment the forward speed of the machine shall be so selected in relation to the rotor speed that the required degree of mixing, pulverisation and depth of processing is obtained. In multiple-pass processing, the prepared sub-grade shall be pulverised to the required depth with successive passes of the equipment and the moisture content adjusted to be within prescribed limits mentioned hereinafter. The lime shall then be spread uniformly and mixing continued with successive passes until the required depth and uniformity of processing have been obtained.

The mixing equipment shall be so set that it cuts slightly into the edge of the adjoining lane processed previously so as to ensure that all the material forming a layer has been properly processed for the full width.

402.3.5 Construction with Manual Means

Where manual mixing is permitted, the soil from borrow areas shall first be freed of all vegetation and other deleterious mater and placed on the prepared subgrade. The soil shall then be pulverized by means of crow-bars, pick axes or other means approved by the Engineer.

Water in requisite quantities may be sprinkled on the soil for aiding pulverisation. On the pulverized soil, the lime in requisite quantities shall be spread uniformly and mixed thoroughly by working with spades or other similar implements till the whole mass is uniform. After adjusting the moisture content to be within the limits mentioned later, the mixed material shall be leveled up to the required thickness so that it is ready to be rolled.

402.3.6 Addition of Lime

Lime may be mixed with the prepared material either in slurry form or dry state at the option of the Contractor with the approval of the Engineer.

Dry lime shall be prevented from blowing by adding water to the lime or other suitable means selected by the Contractor, with the approval of the Engineer.

The tops of windrowed material may be flattened or slightly trenched to receive the lime.

The distance to which lime may be spread upon the prepared material ahead of the mixing operation shall be determined by the Engineer.

No traffic other than the mixing equipment shall be allowed to pass over the spread lime until after completion of mixing.

Mixing or remixing operations, regardless of equipment used, shall continue until the material is free of any white streaks or pockets of lime and the mixture is uniform.

Non-uniformity of colour reaction, when the treated material is tested with the standard phenolphthalein alcohol indicator, will be considered evidence of inadequate mixing.

402.3.7 Moisture Content for Compaction

The moisture content at compaction checked vide IS:2720 (Part 2) shall neither be less than the optimum moisture content corresponding to IS:2720 (Part 8) nor more than 2 percent above it.

402.3.8 Rolling

Immediately after spreading, grading and levelling of the mixed material, compaction shall be carried out with approved equipment preceded by a few passes of lighter rollers if necessary. Rolling shall commence at edges and progress towards the centre, except at super elevated portions or for carriageway with unidirectional cross-fall where it shall commence at the inner edge and progress towards the outer edge. During rolling, the surface shall be frequently checked for grade and crossfall (camber) and any irregularities corrected by loosening the material and removing/adding fresh material. Compaction shall continue until the density achieved is at least 98 percent of the maximum dry density for the material determined in accordance with IS:2720 (Part 8).

Care shall be taken to see that the compaction of lime stabilised material is completed within three hours of its mixing or such shorter period as may be found necessary in dry weather.

During rolling it shall be ensured that roller does not bear directly on hardened or partially hardened treated material previously laid other than what may be necessary for achieving the specified compaction at the joint. The final surface shall be well closed, free from movement under compaction planes, ridges, cracks or loose material. All loose or segregated or otherwise defective areas shall be made good to the full thickness of the layer and recompacted.

402.3.9 Curing

The sub-base course shall be suitably cured for a minimum period of 7 days after which subsequent pavement courses shall be laid to prevent the surface from drying out and becoming friable. No traffic of any kind shall ply over the completed sub-base unless permitted by the Engineer.

402.4 Surface Finish and Quality Control of Work

The surface finish of construction shall conform to the requirements of Clause 902.

Control on the quality of materials and works shall be exercised by the Engineer in accordance with Section 900.

402.5 Strength

When lime is used for improving the subgrade, the soil-lime mix shall be tested for its CBR value. When lime stabilized soil is used in a sub-base, it shall be tested for unconfined compressive strength (UCS) at 7 days. In case of variation from the design CBR/UCS, in situ value being lower, the pavement design shall be reviewed based on the actual CBR/UCS values. The extra pavement thickness needed on account of lower CBR/UCS value shall be constructed by the Contractor at his own cost.

402.6 Arrangements for Traffic

During the period of construction, arrangements for traffic shall be provided and maintained in accordance with Clause 112.

402.7 Measurements for Payment

Stabilised soil sub-graded sub-base shall be measured as finished work in position in cubic metres.

402.8 Rate

The Contract unit rate for lime stabilised soil sub-graded/ sub-base shall be payment in full for carrying out the required operations including full compensation for all components listed in Clause 401.7 (i) to (v).

403 CEMENT TREATED SOIL AND CEMENT-FLYASH TREATED SUB-BASE/BASE

403.1 Scope

This work shall consist of laying and compacting a sub-base/base course of soil treated with cement or cement-flyash on prepared subgrade/sub-base, in accordance with the requirements of these

Specifications and in conformity with the lines, grades and cross-sections shown on the drawings or as directed by the Engineer.

403.2 Materials

403.2.1 Material to be Treated

The material used for cement or cement-flyash treatment shall be soil including sand and gravel, laterite, kankar, brick aggregate, crushed rock or slag or any combination of these. For use in a sub-base course, the material shall have a grading shown in Table 400-4. It shall have a uniformity coefficient not less than 5, capable of producing a well-closed surface finish. For use in a base course, the material shall be sufficiently well graded to ensure a well-closed surface finish and have a grading within the range given in Table 400-4. If the material passing 425 micron sieve is plastic, it shall have a liquid limit not greater than 45 percent and a plasticity index not greater than 20 percent determined in accordance with IS:2720 (Part 5). The physical requirements for the material to be treated with cement for use in a base course shall be same as for Grading I Granular Sub-base, Clause 401.2.2.

403.2.2 Cement

Cement for stabilization shall either be ordinary Portland Cement, Portland Slag Cement or Portland Puzzolana Cement and shall comply with the requirements of IS:269, 455 or 1489 respectively.

Table 400-4 : Grading Limits of Material for Stabilisation with Cement

IS sieve size	Percentage by mass passing Sub-Base/Base within the range
53.00 mm	100
37.5 mm	95 – 100
19.0 mm	45 – 100
9.5 mm	35 – 100
4.75 mm	25 – 100
600 micron	8 – 65
300 micron	5 – 40
75 micron	0 – 10

403.2.3 Lime

If needed for pre-treatment of highly clayey soils, Clause 402.2.2 shall apply.

403.2.4 Flyash

Flyash may be from anthracitic coal or lignitic coal. Flyash to be used for cement-flyash treatment shall conform to the requirement given in Tables 400-5 and 400-6.

Table 400-5 : Chemical Requirements for Fly Ash as Pozzolana

Sl. No.	Characteristics	Requirements for Fly Ash		Method of Test
		Anthracitic Flyash	Lignitic Flyash	
1)	$SiO_2+Al_2O_3+Fe_2O_3$ in percent by mass, Min	70	50	IS:1727
2)	SiO_2 in percent by mass, Min	35	25	IS:1727
3)	MgO in percent by mass, Max	25	5.0	IS:1727
4)	SO_3 in percent by mass, Max	2.75	3.5	IS:1727
5)	Available alkalies as Na_2O/K_2O in percent by mass, Max,	1.5	1.5	IS:4032
6)	Total chlorides in percent by mass, Max	0.05	0.05	IS:1727
7)	Loss on ignition in percent by mass, Max	5.0	5.0	IS:1727

Table 400-6 : Physical Requirement for Fly Ash as a Pozzolona

Sl. No.	Characteristics	Requirement
1)	Fineness-specific surface in m^2/Kg by Blaine's permeability test, Min	250
2)	Particles retained on 45 micron IS sieve, Max	40
3)	Lime reactivity in N/mm^2, Min	3.5
4)	Soundness by autoclave test expansion of specimen in percent, Max	0.8
5)	Soundness by Lechatelier method-expansion in mm, Max	10

Pond ash or bottom ash, which do not meet the requirements of Tables 400-5 and 400-6 can also be used for cement-flyash treatment. However, in all cases of cement stabilised fly-ash/ bottom ash/ pond ash, mix should develop adequate strength.

403.2.5 Quantity of Cement in Cement-Soil Stabilised Mix

The quantity of cement to be added as percent by weight of the dry soil shall be specified in the Contract. Also if lime is used as pretreatment for highly clayey soils, the quantity as percent by weight of dry soil shall be specified in the Contract. The mix design shall be done on the basis of 7 day unconfined compressive strength (UCS) and/or durability test under 12 cycles of wet-dry conditions. The laboratory strength values shall be at least 1.5 times the minimum field UCS value stipulated in the Contract.

403.2.6 Quantity of Cement in Cement/Fly Ash Treated Sub-base/Base

The quantity of cement shall be more than 2 percent by weight of cement/ fly-ash mix. The mix design shall be done to achieve a strength of 1.75 MPa when tested on cylindrical specimens compacted to the density at optimum moisture content, tested in accordance with IS:2720 (Part 8 as specified in the contract) after 7 days moist curing. The design mix shall indicate the proportions of cement and fly ash and the quantity of water to be mixed.

403.2.7 Water

The water to be used for cement stabilization shall be clean and free from injurious substances. Potable water shall be used.

403.3 Construction Operations

403.3.1 Weather Limitations

Stabilisation shall not be done when the air temperature in the shade is less than 10°C.

403.3.2 Degree of Pulverisation

For stabilisation, the soil before addition of cement shall be pulverised, where necessary, to the extent that it passes the requirements as set out in Table 400-7 when tested in accordance with the method described in Appendix-3.

Table 400-7 : Soil Pulverisation Requirements for Cement Stabilisation

IS sieve Designation	Minimum percent by weight passing the IS sieve
26.5 mm	100
5.6 mm	80

403.3.3 Clauses 402.3.3 to 402.3.5 shall apply as regards spreading and mixing the stabilizer except that cement or lime plus cement as the case may be, shall be used as the stabilizing material in place of lime.

403.3.4 Moisture Content for Compaction

The moisture content at compaction checked vide IS:2720 (Part 2) shall not be less than the optimum moisture content corresponding to IS:2720 (Part 8) nor more than 2 percent above it.

403.3.5 Rolling

Clause 402.3.8 shall apply except that care shall be taken to see that the compaction of cement stabilised material is completed within two hours of its mixing or such shorter period as may be found necessary in dry weather.

403.3.6 Curing

The sub-base/base course shall be suitably cured for 7 days. Subsequent pavement course shall be laid soon after to prevent the surface from drying out and becoming friable. No traffic of any kind shall ply over the completed sub-base unless permitted by the Engineer.

403.4 Surface Finish

The surface finish of construction shall conform to the requirements of Clause 902.

403.5 Strength and Quality Control

Control on the quality of materials and works shall be exercised by the Engineer in accordance with Section 900.

Cement treated soil sub-base/base and cement/fly ash treated sub-base/base shall be tested for the unconfined compressive strength (UCS) value at 7 days, actually obtained in-situ. In case of variation from the design UCS, in-situ value being on lower side, prior to proceeding with laying of base/surface course on it, the pavement design shall be reviewed for actual UCS value. The extra pavement thickness needed on account of lower UCS shall be constructed by the Contractor at his own cost.

403.6 Arrangements for Traffic

During the period of construction, arrangements for traffic shall be provided and maintained in accordance with Clause 112.

403.7 Measurements for Payment

Stabilised soil sub-base/base shall be measured as finished work in position in cubic metres.

403.8 Rate

The Contract unit rate for cement treated soil sub-base/base with pretreatment with lime if required and cement/fly ash treated sub-base/base shall be payment in full for carrying out

required operations including full compensation for all components listed in Clause 401.7 (i) to (v).

404 WATER BOUND MACADAM SUB-BASE/BASE

404.1 Scope

This work shall consist of clean crushed aggregates mechanically interlocked by rolling and bonding together with screening, binding material where necessary and water laid on a properly prepared subgrade/sub-base/base or existing pavement, as the case may be and finished in accordance with the requirements of these Specifications and in close conformity with the lines, grades, cross-sections and thickness as per approved plans or as directed by the Engineer.

404.2 Materials

404.2.1 Coarse Aggregates

Coarse aggregates shall be either crushed or broken stone, crushed slag, overburnt (Jhama) brick aggregates or any other naturally occurring aggregates such as kankar and laterite of suitable quality. Materials other than crushed or broken stone and crushed slag shall be used in sub-base courses only. If crushed gravel /shingle is used, not less than 90 percent by weight of the gravel/shingle pieces retained on 4.75 mm sieve shall have at least two fractured faces. The aggregates shall conform to the physical requirements set forth in **Table 400-8**. The type and size range of the aggregate shall be specified in the Contract or shall be as specified by the Engineer. If the water absorption value of the coarse aggregate is greater than 2 percent, the soundness test shall be carried out on the material delivered to site as per IS:2386 (Part 5).

Table 400-8 : Physical Requirements of Coarse Aggregates for Water Bound Macadam for Sub-base/Base Courses

S.No.	Test	Test Method	Requirements
1) ***	Los Angeles Abrasion value or Aggregate Impact value	IS: 2386(Part 4) IS: 2386 (Part-4) or IS:5640*	40 percent (Max) 30 percent (Max)
2)	Combined Flakiness and Elongation Indices (Total) **	IS:2386 (Part-1)	35 percent (Max)

* Aggregates which get softened in presence of water shall be tested for Impact value under wet conditions in accordance with IS:5640.

** The requirement of flakiness index and elongation index shall be enforced only in the case of crushed broken stone and crushed slag.

*** In case water bound macadam is used for sub-base, the requirements in respect of Los Angeles Value and Aggregate Impact Value shall be relaxed to 50 percent and 40 percent maximum respectively.

404.2.2 Crushed or Broken Stone

The crushed or broken stone shall be hard, durable and free from excess flat, elongated, soft and disintegrated particles, dirt and other deleterious material.

404.2.3 Crushed Slag

Crushed slag shall be made from air-cooled blast furnace slag. It shall be of angular shape, reasonably uniform in quality and density and generally free from thin, elongated and soft pieces, dirt or other deleterious materials. The weight of crushed slag shall not be less than 11.2 kN per m^3 and the percentage of glossy material shall not be more than 20. It should also comply with the following requirements:

i)	Chemical stability	:	To comply with requirements of appendix of BS:1047
ii)	Sulphur content	:	Maximum 2 percent
iii)	Water absorption	:	Maximum 10 percent

404.2.4 Overburnt (Jhama) Brick Aggregates

Jhama brick aggregates shall be made from overburnt bricks or brick bats and be free from dust and other objectionable and deleterious materials. This shall be used only for road stretch when traffic is low.

404.2.5 Grading Requirement of Coarse Aggregates

The coarse aggregates shall conform to one of the Gradings given in Table 400-9 as specified.

404.2.6 Screenings

Screenings to fill voids in the coarse aggregate shall generally consist of the same material as the coarse aggregate. However, where permitted, predominantly non-plastic material such as moorum or gravel (other than rounded river borne material) may be used for this purpose provided liquid limit and plasticity index of such material are below 20 and 6 respectively and fraction passing 75 micron sieve does not exceed 10 percent.

Table 400-9 : Grading Requirements of Coarse Aggregates

Grading No.	Size Range	IS Sieve Designation	Percent by weight Passing
1)	63 mm to 45 mm	75 mm	100
		63 mm	90 – 100
		53 mm	25 – 75
		45 mm	0 – 15
		22.4 mm	0 – 5
2)	53 mm to 22.4 mm	63 mm	100
		53 mm	95 – 100
		45 mm	65 – 90
		22.4 mm	0 – 10
		11.2 mm	0 – 5

Note : The compacted thickness for a layer shall be 75 mm.

Screenings shall conform to the grading set forth in Table 400-10. The quantity of screenings required for various grades of stone aggregates are given in Table 400-11. The Table also gives the quantities of materials (loose) required for 10 m^2 for sub-base/base compacted thickness of 75 mm.

The use of screenings shall be omitted in the case of soft aggregates such as brick metal, kankar, laterites, etc. as they are likely to get crushed to a certain extent under rollers.

404.2.7 Binding Material

Binding material to be used for water bound macadam as a filler material meant for preventing ravelling shall comprise of a suitable material approved by the Engineer having a Plasticity Index (PI) value of less than 6 as determined in accordance with IS:2720 (Part-5).

The quantity of binding material where it is to be used, will depend on the type of screenings. Generally, the quantity required for 75 mm compacted thickness of water bound macadam will be 0.06–0.09 m^3 per 10 m^2.

Table 400-10 : Grading For Screenings

Grading Classification	Size of Screenings	IS Sieve Designation	Percent by Weight Passing the Sieve
A	13.2 mm	13.2 mm	100
		11.2 mm	95 – 100
		5.6 mm	15 - 35
		180 micron	0 –10
B	11.2 mm	11.2 mm	100
		9.5 mm	80 – 100
		5.6 mm	50 – 70
		180 micron	5 – 25

Table 400-11 : Approximate Quantities of Coarse Aggregates and Screenings Required for 75 mm Compacted Thickness of Water Bound Macadam (WBM) Sub-Base/Base Course for 10 m² Area

Classification	Size Range	Compacted Thickness	Loose Qty.	Screenings			
				Stone Screening		Crushable Type Such as Moorum or Gravel	
				Grading Classification & Size	For WBM Sub-base/ Base Course (Loose Quantity)	Grading Classification & Size	Loose Qty.
Grading 1	63 mm to 45 mm	75 mm	0.91 to 1.07 m³	Type A 13.2 mm	0.12 to 0.15 m³	Not uniform	0.22 to 0.24 m³
-do-	-do-	-do-	-do-	Type B 11.2 mm	0.20 to 0.22 m³	-do-	-do-
Grading 2	53 mm to 22.4 mm	75 mm	-do-	-do-	0.18 to 0.21 m³	-do-	-do-

The above mentioned quantities should be taken as a guide only, for estimation of quantities for construction etc.

Application of binding materials may not be necessary when the screenings used are of crushable type such as moorum or gravel.

404.3 Construction Operations

404.3.1 Preparation of Base

The surface of the sub-grade/sub-base/base to receive the water bound macadam course shall be prepared to the specified grade and camber and cleaned of dust, dirt and other extraneous material. Any ruts or soft yielding places shall be corrected in an approved manner and rolled until firm surface is obtained.

Where the WBM is to be laid on an existing metalled road, damaged area including depressions and potholes shall be repaired and made good with the suitable material. The existing surface shall be scarified and re-shaped to the required grade and camber before spreading the coarse aggregate for WBM.

As far as possible, laying water bound macadam course over existing bituminous layer may be avoided since it will cause problems of internal drainage of the pavement at the interface of two courses. It is desirable to completely pick out the existing thin bituminous wearing course where water bound macadam is proposed to be laid over it.

404.3.2 Inverted Choke/Sub-surface Drainage Layer

If water bound macadam is to be laid directly over the sub-grade, without any other intervening pavement course, a 25 mm course of screenings (Grading B) or coarse sand shall be spread on the prepared sub-grade before application of the aggregates is taken up. In case of a fine sand or silty or clayey sub-grade, it is advisable to lay 100 mm insulating layer of screening or coarse sand on top of fine grained soil, the gradation of which will depend upon whether it is intended to act as a drainage layer as well. As a preferred alternative to inverted choke, appropriate geosynthetics performing functions of separation and drainage may be used over the prepared sub-grade as directed by the Engineer. Section 700 shall be applicable for use of geosynthetics.

404.3.3 Lateral Confinement of Aggregates

For construction of WBM, arrangement shall be made for the lateral confinement of aggregates. This shall be done by building adjoining shoulders along with WBM layers. The practice of constructing WBM in a trench section excavated in the finished formation must be completely avoided.

Where the WBM course is to be constructed in narrow widths for widening of an existing pavement, the existing shoulders should be excavated to their full depth and width up to the sub-grade level except where widening specifications envisages laying of a stablised sub-base using in-situ operations in which case the same should be removed only up to the sub-base level.

404.3.4 Spreading Coarse Aggregates

The coarse aggregates shall be spread uniformly and evenly upon the prepared sub-grade/ sub-base in the required quantities from the stockpiles to proper profile by using templates placed across the road about 6 m apart, in such quantities that the thickness of each compacted layer is not more than 75 mm. In no case shall these be dumped in heaps directly on the area where these are to be laid nor shall their hauling over a partly completed base be permitted. Wherever possible, approved mechanical devices such as aggregate spreader shall be used to spread the aggregates uniformly so as to minimize the need for manual rectification afterwards.

No segregation of coarse aggregates shall be allowed and the coarse aggregates, as spread shall be of uniform gradation with no pockets of fine material.

The surface of the aggregates spread shall be carefully checked with templates and all high or low spots remedied by removing or adding aggregates as may be required. The surface shall be checked frequently with a straight edge while spreading and rolling so as to ensure a finished surface as per approved drawings.

The coarse aggregates shall not normally be spread more than 3 days in advance of the subsequent construction operations.

404.3.5 Rolling

Immediately following the spreading of the coarse aggregates, rolling shall be started with three wheeled power rollers of 80 to 100 kN capacity or tandem or vibratory rollers of 80 to 100 kN static weight. The type of roller to be used shall be approved by the Engineer based on trial run.

Except on superelevated portions and carriageway with unidirectional cross-fall, where the rolling shall proceed from inner edge to the outer, rolling shall begin from the edges gradually progressing towards the center. First the edge/edges shall be compacted with roller running forward and backward. The roller shall then move inward parallel to the center line of the road, in successive passes uniformly overlapping preceding tracks by at least one-half width.

Rolling shall be carried out on courses where coarse aggregates of crushed/ broken stone are used, till the road metal is partially compacted. This will be followed by application of screenings and binding material where required in Clauses 404.3.6 and 404.3.7.

However, where screenings are not to be applied as in the case of aggregates like brick metal, laterite and Kankar for sub-base construction, the compaction shall be continued until the aggregates are thoroughly keyed. Rolling shall be continued and light sprinkling of water shall be done till the surface is well compacted.. Rolling shall not be done when the sub-

grade is soft or yielding or when it causes a wave-like motion in the sub-grade or sub-base course.

The rolled surface shall be checked transversely with templates and longitudinally with 3 m straight edge. Any irregularities, exceeding 12 mm, shall be corrected by loosening the surface, adding or removing necessary amount of aggregates and re-rolling until the entire surface conforms to the desired camber and grade. In no case shall the use of screenings be permitted to make up depressions.

Material, which gets crushed excessively during compaction or becomes segregated, shall be removed and replaced with suitable aggregates.

404.3.6 Application of Screenings

After the coarse aggregates have been rolled to Clause 404.3.5, screenings to completely fill the interstices shall be applied gradually over the surface. These shall not be damp or wet at the time of application. Dry rolling shall be done while the screenings are being spread so that vibrations of the roller cause them to settle into the voids of the coarse aggregates. The screenings shall not be dumped in piles but be spread uniformly in successive thin layers either by the spreading motions of hand shovels or by mechanical spreaders, or directly from tipper with suitable grit spreading arrangement. Tipper operating for spreading the screenings shall be equipped with pneumatic tyres and operated so as not to disturb the coarse aggregates.

The screenings shall be applied at a slow and uniform rate (in three or more applications) so as to ensure filling of all voids. This shall be accompanied by dry rolling and brooming with mechanical brooms, hand brooms or both. In no case shall the screenings be applied so fast and thick as to form cakes or ridges on the surface in such a manner as would prevent filling of voids or prevent the direct bearing of the roller on the coarse aggregates. These operations shall continue until no more screenings can be forced into voids of the coarse aggregates. The spreading, rolling, and brooming of screenings shall be carried out in only such lengths of the road which could be completed within one day's operation.

404.3.7 Sprinkling of Water and Grouting

After application of screenings, the surface shall be copiously sprinkled with water, swept and rolled. Hand brooms shall be used to sweep the wet screenings into voids and to distribute them evenly. The sprinkling, sweeping and rolling operation shall be continued, with additional screenings applied as necessary until the coarse aggregates have been thoroughly keyed, well-bonded and firmly set in its full depth and a grout has been formed of screenings. Care shall be taken to see that the sub-base or sub-grade does not get damaged due to the addition of excessive quantities of water during construction.

In case of lime treated soil sub-base, construction of water bound macadam on top of it shall be taken up after curing as per Clause 402.3.9 and as directed by the Engineer.

Application of binding material : After the application of screenings in accordance with Clauses 404.3.6 and 404.3.7, the binding material where it is required to be used (Clause 404.2.7) shall be applied successively in two or more thin layers at a slow and uniform rate. After each application, the surface shall be copiously sprinkled with water, the resulting slurry swept in with hand brooms, or mechanical brooms to fill the voids properly, and rolled during which water shall be applied to the wheels of the rollers if necessary to wash down the binding material sticking to them. These operations shall continue until the resulting slurry after filling of voids, forms a wave ahead of the wheels of the moving roller.

404.3.8 Setting and Drying

After the final compaction of water bound macadam course, the pavement shall be allowed to dry overnight. Next morning hungry spots shall be filled with screenings or binding material as directed, lightly sprinkled with water if necessary and rolled. No traffic shall be allowed on the road until the macadam has set. The Engineer shall have the discretion to stop hauling traffic from using the completed water bound macadam course, if in his opinion it would cause excessive damage to the surface.

The compacted water bound macadam course shall be allowed to completely dry and set before the next pavement course is laid over it.

404.4 Surface Finish and Quality Control of Work

404.4.1 The surface finish of construction shall conform to the requirements of Clause 902.

404.4.2 Control on the quality of materials and works shall be exercised by the Engineer in accordance with Section 900.

404.4.3 The water bound macadam work shall not be carried out when the atmospheric temperature is less than 10°C in the shade.

404.4.4 Reconstruction of Defective Macadam

The finished surface of water bound macadam shall conform to the tolerances of surface regularity as prescribed in Clause 902. However, where the surface irregularity of the course exceeds the tolerances or where the course is otherwise defective due to sub-grade soil mixing with the aggregates, the course to its full thickness shall be scarified over the affected area, reshaped with added material or removed and replaced with fresh material as applicable and re-compacted. The area treated shall not be less than 10 sq.m. In no case shall depressions be filled up with screenings or binding material.

404.5 Arrangements for Traffic

During the period of construction, the arrangements for traffic shall be done as per Clause 112.

404.6 Measurements for Payment

Water bound macadam shall be measured as finished work in position in cubic metres.

404.7 Rate

The Contract unit rate for water bound macadam sub-base/base course shall be payable in full for carrying out the required operations including full compensation for all components listed in Clause 401.7 (i) to (v), including arrangement of water used in the work as approved by the Engineer.

405 CRUSHED CEMENT CONCRETE SUB-BASE

405.1 Scope

This work shall consist of breaking and crushing the damaged cement concrete slabs and re-compacting the same as sub-base/base course in one or more layers. The work shall be performed on such widths and lengths as may be specified, in accordance with the requirements of these Specifications and in conformity with the lines, grades and cross-sections shown on the drawings or as otherwise directed by the Engineer.

405.2 Materials

405.2.1 Coarse Aggregates

Coarse aggregates for this work shall be broken cement concrete slabs crushed to a size not exceeding 75 mm and as far as possible, conforming to one of the gradings given in **Table 400-9**.

405.3 Construction Operations

405.3.1 General

Crushed cement concrete sub-base course may be constructed in one or two layers, depending upon the thickness of the concrete slabs dismantled and crushed. The thickness of each layer shall not exceed 75 mm compacted thickness.

405.3.2 Preparation of Surface

The surface of the subgrade shall be prepared in accordance with Clause 404.3.1.

405.3.3 Spreading of Aggregates

The sub-base material of grading specified in the Contract shall be spread on the prepared subgrade with the help of a motor grader of adequate capacity, its blade having hydraulic controls suitable for initial adjustment and for maintaining the required slope and grade during the operation, or other means as approved by the Engineer.

405.3.4 Rolling

Immediately following the spreading of the coarse aggregates, rolling shall be started with three wheeled power rollers of 80 to 100 kN capacity or tandem or vibratory rollers of 80 to 100 kN static weight. The type of roller to be used shall be approved by the Engineer based on trial run.

Except on superelevated portions and carriageway with unidirectional cross-fall where the rolling shall proceed from inner edge to the outer, rolling shall begin from the edges gradually progressing towards the center. First the edge/edges shall be compacted with roller running forward and backward. The roller shall then move inward parallel to the center line of the road, in successive passes uniformly overlapping preceding tracks by at least one-half width.

Rolling shall be continued and light sprinkling of water shall be done till the surface is well compacted.

The rolled surface shall be checked transversely with templates and longitudinally with 3 m straight edge. Any irregularities, exceeding 12 mm, shall be corrected by loosening the surface, adding or removing necessary amount of aggregates and re-rolling until the entire surface conforms to the desired camber and grade.

405.4 Surface Finish and Quality Control of Work

The surface finish and control on the quality of materials and works shall be exercised by the Engineer in accordance with Section 900.

405.5 Arrangements for Traffic

During the period of construction, arrangement for traffic shall be done as per Clause 112.

405.6 Measurements for Payment

Breaking the existing cement concrete pavement slabs, crushing and recompacting the slab material as sub-base course shall be measured as a single item in terms of the volume of sub-base laid in position in cubic metres.

405.7 Rate

The Contract unit rate for crushed cement concrete sub-base course shall be payment in full for carrying out the required operations including full compensation for:

i) making arrangements for traffic to Clause 112 except for initial treatment to verges/shoulders and construction of diversions;

ii) breaking the cement concrete slabs, crushing, sieving and recompacting the slab material as sub-base course;

iii) all labour, tools, equipment and incidentals to complete the work to the Specifications;

iv) carrying out the work in part widths of road where directed; and

v) carrying out the required tests for quality control.

406 WET MIX MACADAM SUB-BASE/BASE

406.1 Scope

This work shall consist of laying and compacting clean, crushed, graded aggregate and granular material, premixed with water, to a dense mass on a prepared sub-grade/sub- base/ base or existing pavement as the case may be in accordance with the requirements of these Specifications. The material shall be laid in one or more layers as necessary to lines, grades and cross-sections shown on the approved drawings or as directed by the Engineer.

The thickness of a single compacted Wet Mix Macadam layer shall not be less than 75 mm. When vibrating or other approved types of compacting equipment are used, the compacted depth of a single layer of the sub-base course may be upto 200 mm with the approval of the Engineer.

406.2 Materials

406.2.1 Aggregates

406.2.1.1 Physical Requirements

Coarse aggregates shall be crushed stone. If crushed gravel/shingle is used, not less than

90 percent by weight of the gravel/shingle pieces retained on 4.75 mm sieve shall have at least two fractured faces. The aggregates shall conform to the physical requirements set forth in Table 400-12.

If the water absorption value of the coarse aggregate is greater than 2 percent, the soundness test shall be carried out on the material delivered to site as per IS:2386 (Part-5).

Table 400-12 : Physical Requirements of Coarse Aggregates for Wet Mix Macadam for Sub-base/Base Courses

S. No.	Test	Test Method	Requirements
1)	Los Angeles Abrasion value or Aggregate Impact value	IS:2386 (Part-4) IS:2386 (Part-4) or IS:5640	40 percent (Max.) 30 percent (Max.)
2)	Combined Flakiness and Elongation indices (Total)	IS:2386 (Part-1)	35 percent (Max.)*

* To determine this combined proportion, the flaky stone from a representative sample should first be separated out. Flakiness index is weight of flaky stone metal divided by weight of stone sample. Only the elongated particles be separated out from the remaining (non-flaky) stone metal. Elongation index is weight of elongated particles divided by total non-flaky particles. The values of flakiness index and elongation index so found are added up.

406.2.1.2 Grading Requirements

The aggregates shall conform to the grading given in Table 400-13.

Table 400-13 : Grading Requirements of Aggregates for Wet Mix Macadam

IS Sieve Designation	Percent by weight passing the IS Sieve
53.00 mm	100
45.00 mm	95–100
26.50 mm	–
22.40 mm	60–80
11.20 mm	40–60
4.75 mm	25–40
2.36 mm	15–30
600.00 micron	8–22
75.00 micron	0–5

Material finer than 425 micron shall have Plasticity Index (PI) not exceeding 6.

The final gradation approved within these limits shall be graded from coarse to fine and shall not vary from the low limit on one sieve to the high limit on the adjacent sieve or vice versa.

406.3 Construction Operations

406.3.1 Preparation of Base

Clause 404.3.1 shall apply.

406.3.2 Provision of Lateral Confinement of Aggregates

While constructing wet mix macadam, arrangement shall be made for the lateral confinement of wet mix. This shall be done by laying materials in adjoining shoulders along with that of wet mix macadam layer and following the sequence of operations described in Clause 404.3.3.

406.3.3 Preparation of Mix

Wet Mix Macadam shall be prepared in an approved mixing plant of suitable capacity having provision for controlled addition of water and forced/ positive mixing arrangement like pugmill or pan type mixer of concrete batching plant. The plant shall have following features:

i) For feeding aggregates– three/ four bin feeders with variable speed motor

ii) Vibrating screen for removal of oversize aggregates

iii) Conveyor Belt

iv) Controlled system for addition of water

v) Forced/positive mixing arrangement like pug-mill or pan type mixer

vi) Centralized control panel for sequential operation of various devices and precise process control

vii) Safety devices

Optimum moisture for mixing shall be determined in accordance with IS:2720 (Part-8) after replacing the aggregate fraction retained on 22.4 mm sieve with material of 4.75 mm to 22.4 mm size. While adding water, due allowance should be made for evaporation losses. However, at the time of compaction, water in the wet mix should not vary from the optimum value by more than agreed limits. The mixed material should be uniformly wet and no segregation should be permitted.

406.3.4 Spreading of Mix

Immediately after mixing, the aggregates shall be spread uniformly and evenly upon the prepared sub-grade/sub-base/base in required quantities. In no case shall these be dumped in heaps directly on the area where these are to be laid nor shall their hauling over a partly completed stretch be permitted.

The mix may be spread by a paver finisher. The paver finisher shall be self-propelled of adequate capacity with following features:

i) Loading hoppers and suitable distribution system, so as to provide a smooth uninterrupted material flow for different layer thicknesses from the tipper to the screed.

ii) Hydraulically operated telescopic screed for paving width upto to 8.5 m and fixed screed beyond this. The screed shall have tamping and vibrating arrangement for initial compaction of the layer.

iii) Automatic levelling control system with electronic sensing device to maintain mat thickness and cross slope of mat during laying procedure.

In exceptional cases where it is not possible for the paver to be utilized, mechanical means like motor grader may be used with the prior approval of the Engineer. The motor grader shall be capable of spreading the material uniformly all over the surface.

The surface of the aggregate shall be carefully checked with templates and all high or low spots remedied by removing or adding aggregate as may be required. The layer may be tested by depth blocks during construction. No segregation of larger and fine particles should be allowed. The aggregates as spread should be of uniform gradation with no pockets of fine materials.

The Engineer may permit manual mixing and /or laying of wet mix macadam where small quantity of wet mix macadam is to be executed. Manual mixing/laying in inaccessible/ remote locations and in situations where use of machinery is not feasible can also be permitted. Where manual mixing/laying is intended to be used, the same shall be done with the approval of the Engineer.

406.3.5 Compaction

After the mix has been laid to the required thickness, grade and crossfall/camber the same shall be uniformly compacted to the full depth with suitable roller. If the thickness of single compacted layer does not exceed 100 mm, a smooth wheel roller of 80 to 100kN weight may be used. For a compacted single layer upto 200 mm, the compaction shall be done with the help of vibratory roller of minimum static weight of 80 to 100 kN with an arrangement

for adjusting the frequency and amplitude. An appropriate frequency and amplitude may be selected. The speed of the roller shall not exceed 5 km/h.

In portions having unidirectional cross fall/superelevation, rolling shall commence from the lower edge and progress gradually towards the upper edge. Thereafter, roller should progress parallel to the center line of the road, uniformly over-lapping each preceding track by at least one-third width until the entire surface has been rolled. Alternate trips of the roller shall be terminated in stops at least 1 m away from any preceding stop.

In portions in camber, rolling should begin at the edge with the roller running forward and backward until the edges have been firmly compacted. The roller shall then progress gradually towards the center parallel to the center line of the road uniformly overlapping each of the preceding track by at least one-third width until the entire surface has been rolled.

Any displacement occurring as a result of reversing of the direction of a roller or from any other cause shall be corrected at once as specified and/or removed and made good.

Along forms, kerbs, walls or other places not accessible to the roller, the mixture shall be thoroughly compacted with mechanical tampers or a plate compactor. Skin patching of an area without scarifying the surface to permit proper bonding of the added material shall not be permitted.

Rolling should not be done when the sub-grade is soft or yielding or when it causes a wave-like motion in the sub-base/base course or sub-grade. If irregularities develop during rolling which exceed 12 mm when tested with a 3 m straight edge, the surface should be loosened and premixed material added or removed as required before rolling again so as to achieve a uniform surface conforming to the desired grade and crossfall. In no case shall the use of unmixed material be permitted to make up the depressions.

Rolling shall be continued till the density achieved is at least 98 percent of the maximum dry density for the material as determined by the method outlined in IS:2720 (Part-8).

After completion, the surface of any finished layer shall be well-closed, free from movement under compaction equipment or any compaction planes, ridges, cracks and loose material. All loose, segregated or otherwise defective areas shall be made good to the full thickness of the layer and recompacted.

406.3.6 Setting and Drying

After final compaction of wet mix macadam course, the road shall be allowed to dry for 24 hours.

406.4 Opening to Traffic

No vehicular traffic shall be allowed on the finished wet mix macadam surface. Construction equipment may be allowed with the approval of the Engineer.

406.5 Surface Finish and Quality Control of Work

406.5.1 Surface Evenness

The surface finish of construction shall conform to the requirements of Clause 902.

406.5.2 Quality Control

Control on the quality of materials and works shall be exercised by the Engineer in accordance with Section 900.

406.6 Rectification of Surface Irregularity

Where the surface irregularity of the wet mix macadam course exceeds the permissible tolerances or where the course is otherwise defective due to sub-grade soil getting mixed with the aggregates, the full thickness of the layer shall be scarified over the affected area, re-shaped with added premixed material or removed and replaced with fresh premixed material as applicable and recompacted in accordance with Clause 406.3. The area treated in the aforesaid manner shall not be less than 5 m long and 2 m wide. In no case shall depressions be filled up with unmixed and ungraded material or fines.

406.7 Arrangement for Traffic

During the period of construction, arrangements for traffic shall be done as per Clause 112.

406.8 Measurements for Payment

Wet mix macadam shall be measured as finished work in position in cubic metres.

406.9 Rate

The Contract unit rate for wet mix macadam shall be payment in full for carrying out the required operations including full compensation for all components listed in Clause 401.7.

407 CRUSHER-RUN MACADAM BASE

407.1 Scope

This work shall consist of furnishing, placing and compacting crushed stone aggregate

sub-base and base courses constructed in accordance with the requirements set forth in these Specifications and in conformity with the lines, grades, thickness and cross-sections shown on the drawings or as directed by the Engineer.

407.2 Materials

The material to be used for the work shall be crushed rock. If crushed gravel/shingle is used, not less than 90 percent by weight of the gravel/shingle pieces retained on 4.75 mm sieve shall have at least two fractured faces. It shall be free from any organic matter and other deleterious substances and shall be of such nature that it can be compacted readily under watering and rolling to form a firm, stable base. The aggregates shall conform to the grading and quality requirements given in Tables 400-14 and 400-15.

The grading to be adopted shall be as indicated in the Contract.

407.3 Construction Operations

407.3.1 Preparation of Sub-grade

The surface of the sub-grade shall be prepared in accordance with Clause 404.3.1. Any ruts, deformations or soft yielding places which occur in the sub-base or sub-grade shall be corrected and compacted to the required density before the aggregate base course is placed thereon.

407.3.2 Spreading, Watering, Mixing and Compaction

The aggregate shall be uniformly deposited on the approved subgrade by means of hauling vehicle with or without spreading devices. Aggregate will be distributed over the surface to the depth specified on the drawings or as directed by the Engineer.

Table 400-14 : Aggregate Grading Requirements

Sieve Size	Percent passing by weight	
	53 mm max. size	37.5 mm max. size
63 mm	100	
45 mm	87 – 100	100
22.4 mm	50 – 85	90 – 100
5.6 mm	25 – 45	35 – 55
710 mm	10 – 25	10 – 30
90 mm	2 – 5	2 – 5

Table 400-15 : Physical Requirements of Coarse Aggregates for Crusher-Run Macadam Base

	Test	Test Method	Requirements
1)	Los Angeles Abrasion value	IS:2386 (Part 4)	40 maximum
	or		
	Aggregate Impact value	IS:2386 (Part 4) or IS:5640	30 maximum
2)	Combined Flakiness and Elongation Indices (Total)	IS:2386 (Part 1)	35 maximum**
3)	*Water absorption	IS:2386 (Part 3)	2 percent maximum
4)	Liquid Limit of material passing 425 micron	IS:2720 (Part 5)	25 maximum
5)	Plasticity Index of material passing 425 rnicron	IS:2720 (Part 5)	6 maximum

* If the water absorption is more than 2 percent, soundness test shall be carried out as per IS:2386 (Part-5)

** To determine this combined proportion, the flaky stone from a representative sample should first be separated out. Flakiness index is weight of flaky stone metal divided by weight of stone sample. Only the elongated particles be separated out from the remaining (non-flaky) stone metal. Elongation index is weight of elongated particles divided by total non-flaky particles. The value of flakiness index and elongation index so found are added up.

After the base course material has been deposited, it shall be thoroughly blade-mixed to full depth of the layer by alternately blading the entire layer to the center and back to the edges of the road. It shall then be spread and finished to the required cross-section by means of a motor grader.

Water shall be applied prior to and during all blading and processing operations to moisten the material sufficiently to prevent segregation of the fine and coarse particles. Water shall be applied in sufficient amounts during construction to assist in compaction.

Compaction shall commence immediately after the spreading operation. If the thickness of single compacted layer does not exceed 100 mm, a smooth wheel roller of 80 to 100 kN weight may be used. For a compacted single layer upto 200 mm, compaction shall be done with the help of vibratory roller of minimum static weight of 80 to 100 kN or equivalent capacity. The speed of the roller shall not exceed 5 km/h. Each layer of material shall be compacted to not less than 98 percent of the maximum density as determined by IS:2720 (Part-8).

407.4 Opening to Traffic

No vehicular traffic shall be allowed on the finished crusher-run macadam surface. Construction equipment may be allowed with the approval of the Engineer.

407.5 Surface Finish and Quality Control of Work

The surface finish of construction shall conform to the requirements of Clause 902.

Control on the quality of materials and work shall be exercised by the Engineer in accordance with Section 900.

407.6 Arrangements for Traffic

During the period of construction, arrangements for traffic shall be done in accordance with Clause 112.

407.7 Measurements for Payment

Crusher-run macadam base shall be measured as finished work in position in cubic metres.

407.8 Rate

The Contract unit rate for crusher run macadam base shall be payment in full for carrying out the required operations including full compensation for all components as in Clause 401.7 (i) to (v).

408 SHOULDERS, ISLANDS AND MEDIANS

408.1 Scope

The work shall consist of constructing shoulder (hard/paved/earthen with brick or stone block edging) on either side of the pavement, median in the road dividing the carriageway into separate lanes and islands for channelising the traffic at junctions in accordance with the requirements of these Specifications and in conformity with the lines, grades and cross-sections shown on the drawings or as directed by the Engineer.

408.2 Materials

Shoulder on either side of the road may be of selected earth/granular material/paved conforming to the requirements of Clause 305/401 and the median may be of selected earth conforming to the requirements of Clause 305.

Median/Traffic islands shall be raised and kerbed at the perimeter and the enclosed area filled with earth and suitably covered with grass turf/shrubs as per Clause 307 and/or paved as per Clauses 410.3.4 or 410.3.5.

Paved shoulders shall consist of sub-base, base and surfacing courses, as shown in the drawings and materials for the same shall conform to relevant Specifications of the corresponding items. Where paved or hard shoulders are not provided, the pavement shall be provided with brick/stone block edgings as shown in the drawings. The brick shall conform to Clause 1003 of these Specifications. Stone blocks shall conform to Clause 1004 of these Specifications and shall be of size 225 mm x 110 mm x 75 mm.

408.3 Size of Shoulders/Medians/Islands

Shoulder (earthen/hard/paved)/median/traffic island dimensions shall be as shown on the drawings or as directed by the Engineer.

408.4 Construction Operations

408.4.1 Shoulders

The sequence of operations shall be such that the construction of paved shoulder is done in layers each matching the thickness of adjoining pavement layer. Only after a layer of pavement and corresponding layers in paved and earth shoulder portion have been laid and compacted, the construction of next layer of pavement and shoulder shall be taken up.

Where the materials in adjacent layers are different, these shall be laid together and the pavement layer shall be compacted first. The corresponding layer in paved shoulder portion shall be compacted thereafter, which shall be followed by compaction of each shoulder layer. The adjacent layers having same material shall be laid and compacted together.

In all cases where paved shoulders have to be provided along side of existing carriageway, the existing shoulders shall be excavated in full width and to the required depth as per Clause 301.3.7. Under no circumstances, box cutting shall be done for construction of shoulders.

Compaction requirement of earthen shoulder shall be as per Table 300-3. In the case of bituminous courses and concrete pavement, work on shoulder shall start only after the pavement course has been laid and compacted.

During all stages of shoulder construction, the required crossfall shall be maintained to drain off surface water.

Regardless of the method of laying, all shoulder construction material shall be placed directly

on the shoulder. Any spilled material dragged on to the pavement surface shall be immediately removed, without damage to the pavement, and the area so affected thoroughly cleaned.

408.4.2 Median and Islands

Median and islands shall be constructed in a manner similar to shoulder up to the road level. Thereafter, the median and islands, if raised, shall be raised at least 300 mm by using kerb stones of approved material and dimensions and suitably finished and painted as directed by the Engineer. If not raised, the median and islands shall be differentiated from the shoulder/ pavement as the case may be, as directed by the Engineer. The confined area of the median and islands shall be filled with local earth or granular material or any other approved material and compacted by plate compactor/power rammer. The confined area after filling with earth shall be turfed with grass or planted with shrubs, or finished with tiles/slabs as provided in the drawings.

408.4.3 Brick/Stone Block Edging

The brick/stone blocks shall be laid on edge, with the length parallel to the transverse direction of the road. They shall be laid on a bed of 25 mm sand, set carefully rolled into position by a light roller and made flush with the finished level of the pavement.

408.5 Surface Finish and Quality Control of Works

The surface finish of construction shall conform to the requirements of Clause 902. Control on the quality of materials and works shall be exercised by the Engineer in accordance with **Section 900**.

408.6 Measurements for Payment

Shoulder (earthen/hard/paved), island and median construction shall be measured as finished work in position as below:

i) For excavation in cu.m.

ii) For earthwork/granular fill in cu.m.

iii) For sub-base, base, surfacing courses in units as for respective items

iv) For kerb in running metre; length of kerb for median shall be measued for each side separately.

v) For turfing, shrubs and tile/slab finish in sq.m.

vi) For brick/stone block edging in running metre, the length for brick/ stone block edging for median edging shall be measured for each side separately.

408.7 Rate

The Contract unit rate for shoulder (hard/paved/earthen with brick or stone block edging), island and median construction shall be payment in full for carrying out the required operations including full compensation for all components listed in Clause 401.7 (i) to (v) as applicable. The rate for brick/stone block edging shall include the cost of sand cushion.

409 CEMENT CONCRETE KERB AND KERB WITH CHANNEL

409.1 Scope

This work shall consist of constructing cement concrete kerbs and kerbs with channel in the central median and/or along the footpaths or separators in conformity with the lines, levels and dimensions as specified in the drawings or as directed by the Engineer.

409.2 Materials

Kerbs and kerb with channel shall be provided in cement concrete of Grade M 20 in accordance with Section 1700 of these Specifications.

409.3 Type of Construction

These shall be cast-in-situ construction with suitable kerb casting machine in all situations except at locations where continuous casting with equipment is not practicable. In those locations precast concrete blocks shall be used.

409.4 Equipment

A continuous kerb casting equipment of adequate capacity and controls, capable of laying the kerbs in required cross-sections and producing a well-compacted mass of concrete free of voids and honeycombs, shall be used.

409.5 Construction Operations

409.5.1 Kerb shall be laid on firm foundation of minimum 150 mm thickness of cement concrete of M 15 grade cast in-situ or on extended width of pavement. The foundation shall have a projection of 50 mm beyond the kerb stone. Before laying the foundation of lean concrete, the base shall be leveled and slightly watered to make it damp.

409.5.2 In the median portions in the straight reaches, the kerb shall be cast in continuous lengths. In the portions where footpath is provided and/or the slope of the carriageway is towards median (as in case of superelevated portion), there shall be sufficient gap/recess left in the kerb to facilitate drainage openings.

409.5.3 After laying the kerbs and just prior to hardening of the concrete, saw cut grooves shall be provided at 5 m intervals up to finished road level or as specified by the Engineer.

409.5.4 Kerbs on the drainage ends such as along the footpath or the median in superelevated portions, shall be cast with monolithic concrete channels as indicated in drawings. The slope of the channel towards drainage pipes shall be ensured for efficient drainage of the road surface.

409.5.5 Vertical and horizontal tolerances with respect to true line and level shall be ±6 mm.

409.6 Measurements for Payment

Cement concrete kerb/kerb with channel including foundation shall be measured in linear metre for the complete item of work.

409.7 Rate

The Contract unit rates for cement concrete kerb/kerb with channel including foundation for kerb shall be payment in full compensation for furnishing all materials, labour, tools, equipment for construction and other incidental cost necessary to complete the work.

410 FOOTPATHS AND SEPARATORS

410.1 Scope

The work shall consist of constructing footpaths and/or separators at locations as specified in the drawings or as directed by the Engineer.

The lines, levels and dimensions shall be as per the drawings. The scope of the work shall include provision of all drainage arrangements as shown in the drawings or as directed by the Engineer.

410.2 Materials

The footpaths and separators shall be constructed with any of the following types:

a) Cast-in-situ cement concrete of Grade M 20 as per Section 1700 of the Specifications. The minimum size of the panels shall be as specified in the drawings.

b) Precast cement concrete blocks and interlocking blocks/tiles of grade not less than M 30 as per Section 1700 of the Specifications. The thickness and size of the cement concrete blocks or interlocking blocks/ tiles shall be as specified in the drawings.

c) Natural stone slab cut and dressed from stone of good and sound quality, uniform in texture, free from defects and at least equal to a sample submitted by the Contractor and approved by the Engineer. The thickness and size of the natural stone slab shall be as specified in the drawings.

410.3 Construction Operations

410.3.1 Drainage pipes below the footpath originating from the kerbs shall be first laid in the required slope and connected to the drains/sumps/storm water drain/drainage chutes as per provisions of the drawings, or as specified.

410.3.2 Portion on back side of kerbs shall be filled and compacted with granular sub-base material as per Clause 401 of the Specifications in specified thickness.

410.3.3 The base for cast-in-situ cement concrete panels/ tiles/ nature stone slab shall be prepared and finished to the required lines, levels and dimensions as indicated in the drawings.

Over the prepared base, precast concrete interlocking blocks/tiles/natural stone slabs and/or cast-in- situ slab shall be set/laid as described in Clauses 410.3.4 and 410.3.5.

410.3.4 Tiles/Natural Stone Slabs

The blocks/tiles/slabs shall be set on a layer of average 12 mm thick cement-sand mortar (1:3) laid on prepared base in such a way that there is no rocking. The gaps between the blocks/tiles/slabs shall not be more than 12 mm and shall be filled with cement-sand mortar (1:3).

410.3.5 Cast-in-Situ Cement Concrete

The panels of specified size shall be cast on the prepared base in panels of specified size in a staggered manner. Construction joints shall be provided as per Section 1700 of the Specifications.

410.3.6 Precast Concrete Blocks and Interlocking Concrete Block Pavements

The precast concrete blocks and interlocking concrete block pavement shall be laid on a

bedding of sand of thickness specified in the drawing. The grading of the sand layer shall be as in Table 400-16.

Table 400-16

IS Sieve Size	Percent Passing
9.52 mm	100
4.75 mm	95–100
2.36 mm	80–100
1.18 mm	50–95
600 micron	25–60
300 micron	10–30
150 micron	0–15
75 micron	0–10

The joints shall be filled with sand passing a 2.35 mm size with the grading as in Table 400-17.

Table 400-17

IS Sieve Size	Percent Passing
2.36 mm	100
1.18 mm	90–100
600 micron	60–90
300 micron	30–60
150 micron	15–30
75 micron	0–10

The bedding sand slightly moist, the moisture content being about 4 percent. The bedding sand shall be compacted by vibratory plate compactor.

The blocks shall be laid to the levels indicated on the drawings and to the pattern directed by the Engineer. The surface tolerance shall be ±10 mm with respect to the design level. The blocks shall be embedded using a hammer.

410.4 Measurements for Payment

Footpaths and separators shall be measured in Sq.m between inside of kerbs. The edge restraint block and kerb shall be measured separately in linear meter. The items pertaining to drainage shall be measured separately.

410.5 Rate

Contract unit rates shall be inclusive of full compensation for all labour, materials, tools, equipment for footpaths including the base. Cost of providing pipes and arrangement for their discharge into appropriate drainage channels shall be incidental to the construction of footpaths.

500

BASES AND SURFACE COURSES (BITUMINOUS)

501 GENERAL REQUIREMENTS FOR BITUMINOUS PAVEMENT LAYERS

501.1 General

Bituminous pavement courses shall be made using the materials described in the Specifications.

The use of machinery and equipment mentioned in various Clauses of these Specifications is mandatory. Details of the machinery and equipment are available in the Manual for Construction and Supervision of Bituminous Works. The equipment mandatory for any particular project shall be in accordance with the Contract Specifications for that project.

501.2 Materials

501.2.1 Binder

The binder shall be an appropriate type of bituminous material complying with the relevant Indian Standard, as defined in the appropriate Clauses of these Specifications, or as otherwise specified herein. The choice of binder shall be stipulated in the Contract or by the Engineer. Where viscosity grades of bitumen are specified, they are referred to by a designation in accordance with IS:73. Where modified bitumen is specified, it shall conform to the requirements of IRC:SP:53 and IS:15462; and the following provision of this Specification shall apply.

i) Modified bitumen from refinery sources or blended at approved central plant or at site using appropriate industrial process and plant with high shear mill, and testing facilities to achieve stable and homogenous mix shall be used. The use of high shear mixer or any other device capable of producing a homogeneous blend is essential when the modifier is in powder form.

ii) Transportation tanks and storage tanks shall be insulated and equipped with effective heating system and circulation/ agitating device to maintain the specified temperature, homogeneity and viscosity of the bitumen during transit and storage.

iii) Separation, difference in softening point (R&B), shall not be more than 3°C for any type of specified modified bitumen when tested as per Annex B of IS:15462.

Selection criteria for viscosity grade bitumen, based on highest and lowest daily mean temperatures at a particular site, are given in Table 500-1.

Selection criteria for modified bitumen shall be in accordance with IRC:SP:53.

Table 500-1 : Selection Criteria for Viscosity-Graded (VG) Paving Bitumens Based on Climatic Conditions

Lowest Daily Mean Air Temperature, °C	Highest Daily Mean Air Temperature, °C		
	Less than 20°C	20 to 30°C	More than 30°C
More than –10°C	VG-10	VG-20	VG-30
-10°C or lower	VG-10	VG-10	VG-20

Both the highest daily mean air temperature and the lowest daily mean air temperatures mentioned in Tables 500-5 and 500-6 can be obtained for the weather station nearest to the project site from the Indian Meteorological Organization (IMO). This daily mean high temperature on a specific day is the same as daily "normal" high temperature for that day as usually reported in some newspapers. The highest of the 365 daily mean high air temperatures (which usually occurs on some day in May or June) is used in Tables 500-5 and 500-6. Likewise, the lowest daily mean air temperature (which usually occurs on some day in January) can also be obtained from the IMO. Since these are mean temperatures based on the average of 30-40 years data, these temperatures are significantly lower than the absolute maximum temperatures, which may have occurred in a specific year.

501.2.2 Coarse Aggregates

The coarse aggregates shall consist of crushed rock, crushed gravel or other hard material retained on the 2.36 mm sieve. They shall be clean, hard, durable, of cubical shape, free from dust and soft or friable matter, organic or other deleterious matter. Where the Contractor's selected source of aggregates has poor affinity for bitumen, the Contractor shall demonstrate through test results that with the use of anti-stripping agents, the stripping value is improved to satisfy the specification requirements. The Engineer may approve such a source and, as a condition for the approval of that source, the bitumen shall be treated with approved anti-stripping agents, as per the manufacturer's recommendations, at the cost of the Contractor.

Where crushed gravel is proposed for use as aggregate not less than 90 percent by weight of the crushed material retained on the 4.75 mm sieve shall have at least two fractured faces, except that in the case of bituminous concrete the requirement in this regard shall be 95 percent. .

The aggregates shall satisfy the physical requirements set forth in the individual relevant clause for the material.

501.2.3 Fine Aggregates

Fine aggregates shall consist of crushed or naturally occurring material, or a combination of the two, passing 2.36 mm sieve and retained on the 75 micron sieve. They shall be clean,

hard, durable, dry and free from dust, and soft or friable matter, organic or other deleterious matter. Natural sand shall not be allowed in binder and wearing courses. However, natural sand upto 50 percent of the fine aggregates may be allowed in base courses. Fine aggregates shall have a sand equivalent value of not less than 50 when tested in accordance with the requirement of IS:2720 (Part 37). The plasticity index of the fraction passing 0.425 mm shall not exceed 4 when tested in accordance with IS:2720 (Part 5). The fine aggregates shall satisfy the physical requirements set forth in the individual relevant-clause for the material in question.

501.2.4 Sources of Material

The sources of materials proposed to be used by the Contractor shall be tested to the satisfaction of the Engineer who shall give the necessary approval. The Engineer may from time to time withdraw approval of a specific source, or attach conditions to the existing approval. Any change in aggregate source for bituminous mixes shall require a new mix design, and laying trials, where the mix is based on a job mix design. Stockpiles from different sources, approved or otherwise, shall be kept separate, such that there is no contamination between one material and another. Each source submitted for approval shall contain material sufficient for at least 5 days' work.

501.3 Mixing

Pre-mixed bituminous materials shall be prepared in a hot mix plant of adequate capacity and capable of yielding a mix of proper and uniform quality with thoroughly coated aggregates. Appropriate mixing temperatures are given in Table 500-2 of these Specifications. the difference in temperature between the binder and aggregate shall at no time exceed 14°C. In order to ensure uniform quality of the mix and better coating of aggregates, the hot mix plant shall be calibrated from time to time. The essential features of the hot mix plants are given in Annex A of IRC:27.

Table 500-2 : Mixing, Laying and Rolling Temperatures for Bituminous Mixes (Degree Celcius)

Bitumen Viscosity Grade	Bitumen Temperature	Aggregate Temperature	Mixed Material Temperature	Laying Temperature	*Rolling Temperature
VG-40	160-170	160-175	160-170	150 Min	100 Min
VG-30	150-165	150-170	150-165	140 Min	90 Min
VG-20	145-165	145-170	145-165	135 Min	85 Min
VG-10	140-160	140-165	140-160	130 Min	80 Min

* Rolling must be completed before the mat cools to these minimum temperatures.

If a continuous type mixing plant is used, the Contractor must demonstrate by laboratory analysis that the cold feed combined grading is within the grading limits specified for that bituminous bound material. In the case of a designed job mix, the bitumen and filler content shall be derived using this combined grading.

501.4 Transporting

Bituminous materials shall be transported in clean insulated and covered vehicles. An asphalt release agent, such as soap or lime water, may be applied to the interior of the vehicle to prevent sticking and to facilitate discharge of the material.

501.5 Laying

501.5.1 Weather and Seasonal Limitations

Laying shall be suspended:

i) In presence of standing water on the surface;

ii) When rain is imminent, and during rains, fog or dust storm;

iii) When the base/binder course is damp;

iv) When the air temperature on the surface on which it is to be laid is less than 10°C for mixes with conventional bitumen and is less than 15°C for mixes with modified bitumen;

v) When the wind speed at any temperature exceeds the 40 km per hour at 2 m height.

501.5.2 Cleaning of Surface

The surface on which the bituminous work is to be laid shall be cleaned of all loose and extraneous matter by means of a mechanical broom and air jet. The equipment for applying a high pressure air jet from a compressor to remove dust or loose matter shall be available full time at the site.

501.5.3 Spreading

Prior to spreading the mix, the base shall be prepared by carrying out the required operations as per Clause 501.8 depending upon the site conditions. Except in areas where paver cannot get access, bituminous materials shall be spread, levelled and tamped by an approved self-propelled paving machine equipped with an electronic sensing device. The essential features of the paver finisher shall conform to Annex A of IRC:27. As soon as possible after arrival at site, the materials shall be supplied continuously to the paver and laid without delay. The

rate of delivery of material to the paver shall be regulated to enable the paver to operate continuously. The travel rate of the paver, and its method of operations, shall be adjusted to ensure an even and uniform flow of bituminous material across the screed, free from dragging, tearing and segregation of the material. In areas with restricted space (such as confined space, foot ways, of irregular shape and varying thickness, approaches to expansion joints, etc.) where paver cannot be used, the material shall be spread, raked and levelled with suitable hand tools by trained staff.

The minimum thickness of material laid in each paver pass shall be in accordance with the minimum values given in the relevant parts of these Specifications. When laying binder course or wearing course approaching an expansion joint of a structure, machine laying shall stop 300 mm short of the joint. The remainder of the pavement up to the joint, and the corresponding area beyond it, shall be laid by hand, and the joint or joint cavity shall be kept clear of surfacing material.

Bituminous material, with a temperature greater than 145°C, shall not be laid or deposited on bridge deck water-proofing systems, unless precautions against heat damage have been approved by the Engineer.

501.5.4 Cleanliness and Overlaying

Bituminous material shall be kept clean and uncontaminated. The only traffic permitted to run on bituminous material to be overlaid shall be that engaged in laying and compacting the next course or, where a binder course is to be sealed or surface dressed, that engaged on such surface treatment. Should any bituminous material become contaminated, the Contractor shall make it good to the satisfaction of the Engineer, in compliance with Clause 501.8.

Binder course material shall be covered by either the wearing course or surface treatment, whichever is specified in the Contract.

501.6 Compaction

Bituminous materials shall be laid and compacted in layers, which enable the specified thickness, surface level, regularity requirements and compaction to be achieved.

Compaction of bituminous materials shall commence as soon as possible after laying. Compaction shall be substantially completed before the temperature falls below the minimum rolling temperatures stated in the relevant part of these Specifications. Rolling of the longitudinal joints shall be done immediately behind the paving operation. After this, rolling shall commence at the edges and progress towards the center longitudinally except that on super-elevated and unidirectionally cambered portions, it shall progress from the lower to the upper edge parallel to the center line of the pavement. Rolling shall continue until all roller marks have been removed from the surface. All deficiencies in the surface after laying shall

be made good by the attendants behind the paver, before initial rolling is commenced. The initial or breakdown rolling shall be done with 8–10 tonne static weight smooth-wheel rollers. The intermediate rolling shall be done with 8–10 tonne static weight or vibratory roller or with a pneumatic tyre roller of 12 to 15 tonne weight, with a tyre pressure of at least 0.56 MPa. The Contractor shall demonstrate the efficiency of the equipment proposed to be used by carrying compaction trials. The procedure for site trials shall be submitted to the Engineer for approval. The finish rolling shall be done with 6 to 8 tonne smooth wheel tandem rollers. Rolling shall continue until the specified compaction is achieved.

Where compaction is to be determined by density of cores, the requirements to prove the performance of rollers shall apply in order to demonstrate that the specified density can be achieved. In such cases the Contractor shall specify the plant, and the method by which he intends to achieve the specified level of compaction and finish at temperatures above the minimum specified rolling temperature. Laying trials shall then demonstrate the acceptability of the plant and method used.

Bituminous materials shall be rolled in a longitudinal direction, with the driven rolls nearest the paver. The roller shall first compact material adjacent to joints and then work from the lower to the upper side of the layer, overlapping on successive passes by at least one-third of the width of the rear roll or, in the case of a pneumatic-tyred roller, at least the nominal width of 300 mm.

In portions with super-elevated and unidirectional camber, after the edge has been rolled, the roller shall progress from the lower to the upper edge.

Rollers should move at a speed of not more than 5 km per hour. The roller shall not be permitted to stand on pavement which has not been fully compacted, and necessary precautions shall be taken to prevent dropping of oil, grease, petrol/ diesel or other foreign matter on the pavement either when the rollers are operating or standing. The wheels of roller machine shall be in good working order, to prevent the mix from adhering to the wheels. Only sufficient moisture to prevent adhesion between the wheels of rollers and the mix should be used. Surplus water shall not be allowed to stand on the partially compacted pavement.

501.7 Joints

501.7.1 Where joints are made, the material shall be fully compacted and the joint made flush in one of the following ways:

a) All joints shall be cut vertical to the full thickness of the previously laid mix. All loosened material shall be discarded and the vertical face coated with a suitable viscosity grade hot bitumen, or cold applied emulsified bitumen. While spreading the material along the joint the material spread shall overlap 25 mm to 50 mm on the previously laid mix beyond the vertical face of the joint. The thickness of the loose

overlap material should be approximately a quarter more than the final compacted thickness. The overlapped mix shall be dragged back to the hot lane so that the roller can press the small excess into the hot side of the joint to obtain a high joint density.

b) By using two or more pavers operating in echelon, where this is practicable and in sufficient proximity for adjacent widths to be fully compacted by continuous rolling.

501.7.2 All longitudinal joints shall be offset at least 300 mm from parallel joints in the layer beneath or as directed, and in a layout approved by the Engineer. Joints in the wearing course shall coincide with either the lane edge or the lane marking, whichever is appropriate. Longitudinal joints shall not be situated in wheel track zones.

501.7.3 For transverse joints method a) above shall apply. Transverse joints in the successive and adjoining layers shall have a minimum offset of 2 m.

501.8 Preparation of Surface

501.8.1 Scope

This work shall consist of preparing an existing granular or black-topped surface for laying bituminous course. The work shall be performed on such widths and lengths as shown on the drawings or as instructed by the Engineer. The existing surface shall be firm and clean, and treated with Prime or Tack coat where specified in the Contract.

501.8.2 Materials

501.8.2.1 For Scarifying and Re-laying the Granular Surface

The material used shall be coarse aggregates salvaged from the scarification of the existing granular base course supplemented by fresh coarse aggregates and screenings so that aggregates and screenings thus supplemented correspond to Clauses 404 or 406.

501.8.2.2 For Patching Potholes and Sealing Cracks

Where the existing surface to be overlaid is bituminous, material required for patching and sealing cracks shall be in accordance with Clauses 3004.2 and 3004.3, or as directed by the Engineer.

501.8.2.3 For Profile Corrective Course

The type of material for use as profile corrective course shall be as shown on the drawings

or as directed by the Engineer. Where it is to be laid as part of the overlay/ strengthening course, the profile corrective course material shall be of the same specification as that of the overlay/ strengthening course. However, if provided as a separate layer, it shall be of the specification and details given in the Contract.

501.8.3 Construction Operations

501.8.3.1 Preparing Existing Granular Surface

Where the existing surface is granular, all loose materials shall be removed, and the surface lightly watered where the profile corrective course to be provided as a separate layer is also granular. Where the profile corrective course of bituminous material is to be laid over the existing granular surface, the latter shall, after removal of all loose material, be primed in accordance with Clause 502 and a tack coat applied in accordance with Clause 503.

The surface of all granular layers on which bituminous works are to be placed, shall be free from dust. All such layers must be capable of being swept, after the removal of any non-integral loose material, by means of a mechanical broom, without shedding significant quantities of material and dust removed by air jet, washing, or other means approved by the Engineer.

After cleaning, the surface shall be correct to line and level within the tolerances specified for base course.

501.8.3.2 Scarifying Existing Bituminous Surface

Where specified or shown on the drawings, the existing bituminous layer in the specified width shall be removed with care and without causing undue disturbance to the underlying layer, by a suitable method approved by the Engineer. After removal of all loose and disintegrated material, the underlying layers which might have been disturbed shall be suitably reworked supplementing the base material as necessary with suitable fresh stone aggregates and compacted to line and level. The compacted finished surface shall be primed in accordance with **Clause 502**. Reusable materials shall be stacked as directed by the Engineer with all leads and lifts.

501.8.3.3 Patching of Potholes and Sealing of Cracks

Where the existing surface to be overlaid is bituminous, any existing potholes and cracks shall be repaired and sealed in accordance with Clauses 3004.2 and 3004.3, or as directed by the Engineer.

501.8.3.4 Profile Corrective Course

a) **Application of Profile Corrective Course**

i) A profile corrective course for correcting the existing pavement profile shall be laid to varying thickness as shown on the Drawings.

ii) Any high spots in the existing black-topped surface shall be removed by a milling machine or other approved method, and all loose material shall be removed to the satisfaction of the Engineer.

iii) Where the maximum thickness of profile corrective course will be not more than 40 mm, the profile corrective course shall be constructed as an integral part of the overlay course. In other cases, the profile corrective course shall be constructed as a separate layer, adopting such construction procedures and using such equipment as approved by the Engineer, to lay the specified type of material, to thickness and tolerance as specified for the course to be provided.

iv) The profile corrective course shall be laid to tolerances and densities as specified for wearing course if it is laid integral with the wearing course. The profile corrective course shall be laid to tolerances and densities as specified for base course, if it is to be covered with a wearing course layer.

b) **Laying on Granular Base :** After preparing the granular surface in accordance with Clauses 501.8.3.1 and 501.8.3.2, the profile corrective course shall be laid using material as described in Clauses 501.8.2.3 and 501.8.3.4 (a), or as otherwise described in the Contract, and compacted to the requirements of the particular Specification.

c) **Laying on Existing Bituminous Surface :** The existing bituminous surface shall be prepared in accordance with Clause 501.8.3.3, and after applying a tack coat conforming to Clause 503, the bituminous profile corrective course shall be laid using material as described in Clauses 501.8.2.3 and 501.8.3.4(a) and compacted to the requirements of the Specification.

d) **Correction of Local Depressions, Camber and Super-Elevation :** Where local sags or depressions occur in the existing pavement, a specific filling operation shall be instructed by the Engineer, which should be laid in accordance with Fig. 500-1. Normally, the maximum layer thickness at any point should not exceed 100 mm. In placing multiple lifts, they should be arranged according to the correct method as illustrated.

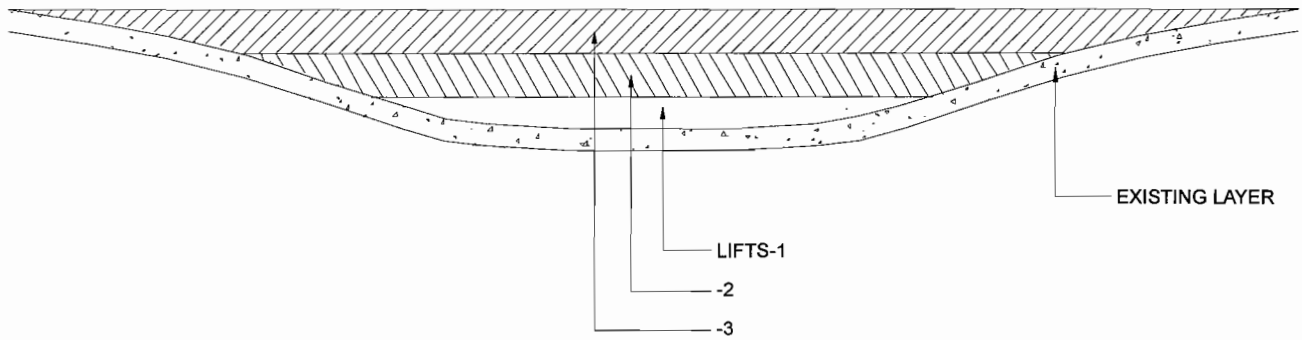

(A) CORRECT METHOD

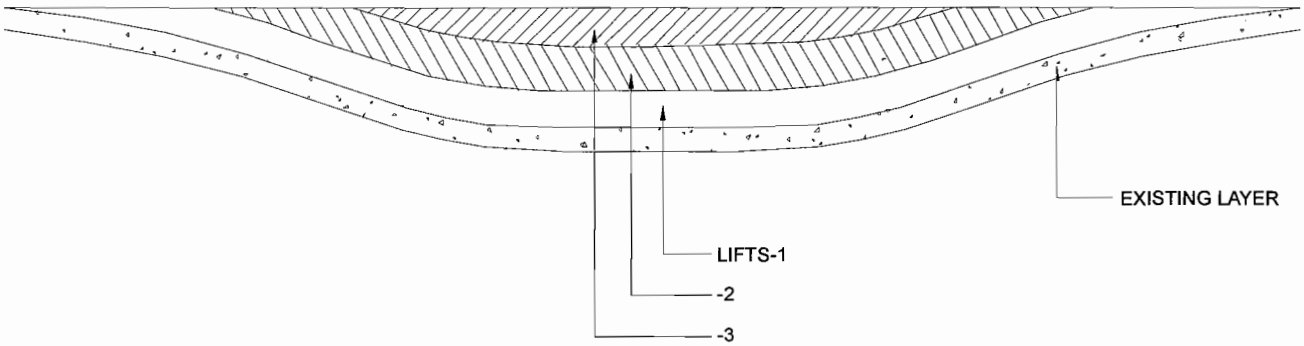

(B) INCORRECT METHOD

Note: Profile corrective course material to be in accordance with the lift thickness

Fig. 500-1 : Methods for Providing Corrective Course for Short Sags and Depressions

For correction of camber or super-elevation of the existing carriageway, the method shown in Fig. 500-2 shall be adopted, depending on the profile of the existing carriageway.

501.8.3.5 Covering the Profile Corrective Courses

Profile corrective course shall be so planned that the layer shall be covered by the designed base/wearing course at the earliest opportunity, before opening to regular traffic.

501.8.4 Surface Finish and Quality Control of Work

The relevant provisions of Section 900 shall apply.

501.8.5 Arrangements for Traffic

During construction operations, arrangements for traffic shall be made in accordance with the provisions of Clause 112.

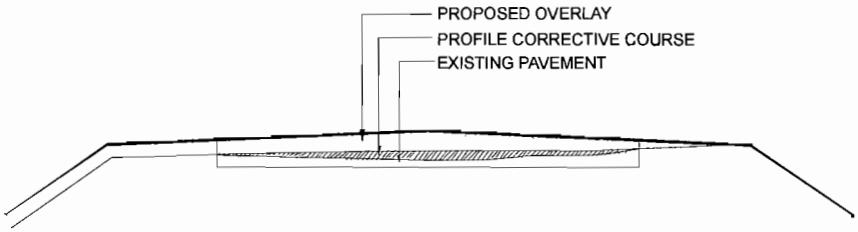

Case I : Deficiency in camber being rectified by profile corrective course

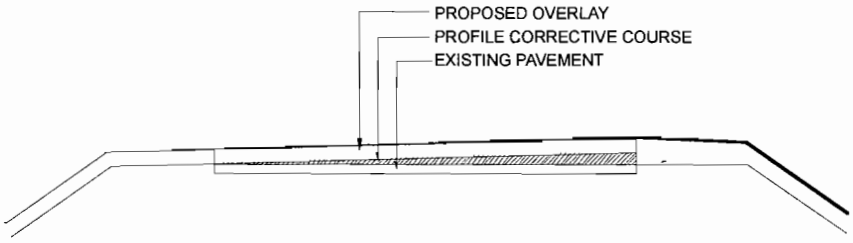

Case II : Deficiency in super-elevation being rectified by profile corrective course

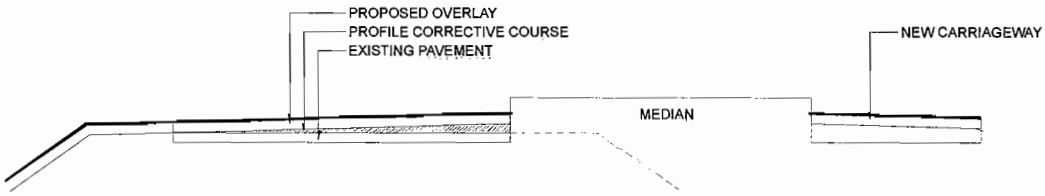

Case III : Converting two-sided camber to one-sided cross-fall during provision of a dual carriageway

Fig. 500-2 : Correction of Camber or Super-Elevation

501.8.6 Environmental Protection

The provisions of Clause 111 and the provision of Annex A to Clause 501 shall apply.

501.8.7 Measurement for Payment

501.8.7.1 Cleaning of the Surface

The work of cleaning of the surface using mechanical broom and air-jet shall be incidental to the work of preparation of surface.

501.8.7.2 Scarifying

Scarifying the existing bituminous surface shall be measured and paid for on a square metre basis.

501.8.7.3 Prime Coat

Prime coat shall be measured and paid for on a square metre basis.

501.8.7.4 Tack Coat

Tack coat shall be measured and paid for on a square metre basis.

501.8.7.5 Potholes and Crack Sealing

The work of filling potholes shall be measured separately and be paid for in square metres or on weight basis in tonnes as specified in the Contract.

The work of sealing cracks by applying fog spray or emulsion slurry seal shall be measured in square metres, for the area covered by the spray.

The work of sealing cracks of size 3 mm to 6 mm in width shall be measured in square metres or in linear meters as specified in the Contract.

The work of sealing cracks of size greater than 6 mm width shall be measured in linear metres.

501.8.7.6 Profile Corrective Course

Profile corrective course shall be measured as the volume laid in position in cubic metres, or in tonnage, as stipulated in the Contract. The volume shall be calculated by plotting the exact profile of corrective course as required, and laid, superimposed on the existing pavement profile. Cross-sectional areas of the profile corrective course shall be measured at intervals of 10 m centre to centre on straight sections and at 5 m center to centre on curves longitudinally and at seven locations transversely, for two lane carriageway, and at three locations transversely for single lane and the volume shall be calculated using the method of end areas.

501.8.7.7 Filling of Local Depressions

The work of filling depressions where instructed to be carried out separately shall be measured by the weight of the bituminous material placed in position.

501.8.8 Rates

501.8.8.1 Rate for Scarifying

The contract unit rate for scarifying existing bituminous surfaces, including repairing/reworking

disturbed underlying layers and removing and stacking reusable and unusable materials, shall include but not necessarily be limited to, the cost of all labour, supply of materials needed for repair/reworking, hire charges of tools and plant, and transportation of scarified materials with all leads and lifts.

501.8.8.2 Rate for Premixed Bituminous Material

The contract unit rate for premixed bituminous material shall be payment in full for carrying out the required operations including full compensation for, but not necessarily limited to:

i) Making arrangements for traffic to Clause 112 except for initial treatment to verge, shoulders and construction of diversions;

ii) Cleaning of the surface;

iii) Providing all materials to be incorporated in the work including arrangement for stock yards, all royalties, fees, rents where necessary and all leads and lifts;

iv) Mixing, transporting, laying and compacting the mix, as specified including all wastage in cutting joints;

v) All labour, tools, equipment, plant including installation of hot mix plant, power supply units and all machinery, incidental to complete the work to these Specifications;

vi) Carrying out the work in part widths of the road where directed;

vii) Carrying out all tests for control of quality;

viii) The rate shall cover the provision of bitumen at the application rate specified in the contract, with the provision that the variation in actual percentage of bitumen used shall be assessed and the payment adjusted accordingly as per Contract;

ix) The rates include for all testing, mix design, transporting and testing of samples, and cores and tests as directed by the Engineer; and

x) The cost of all plant and laying trials as specified to prove the mixing and laying methods shall be deemed to be included in the Contractor's rates.

501.8.8.3 Rate for Potholes and Crack Sealing

The rate for patching potholes shall be as per Clause 3004.2.6.

The rate for sealing cracks by applying fog spray shall be as per Clause 513.9.

The rate for sealing of cracks of width 3 mm or more shall be as per Clause 3004.3.3.5.

The contract unit rate for cracks between 6 mm and 15 mm shall be measured on a linear metre basis, and the rate is to include for all materials, tools, plant, labour, and transport.

501.8.8.4 Rate for Prime Coat

The Contract unit rate for prime coat shall be as per Clause 502.8.

501.8.8.5 Rate for Tack Coat

The Contract unit rate for tack coat shall be as per Clause 503.8.

501.8.8.6 Rate for Filling of Local Depressions

The Contract unit rate for filing of local depressions shall be payment in full for (i) furnishing all materials, (ii) all works involved including trimming, cleaning, backfilling, priming, application of tack coat, filling with bituminous material in layers and compacting each layer (iii) all labour, tools, equipment and incidentals to complete the works in accordance with the Specifications.

501.8.8.7 Rate for Profile Corrective Course

The Contract unit rate for profile corrective course when laid separately shall be payment in full for carrying out the required operations as specified, and shall include all components listed in Clause 501.8.8.2.

Annex 'A'
PROTECTION OF THE ENVIRONMENT

1 GENERAL

1.1 This Appendix sets out limitations on the Contractor's activities specifically intended to protect the environment.

1.2 The Contractor shall take all necessary measures and precautions and otherwise ensure that the execution of the works and all associated operations on or off site are carried out in conformity with statutory and regulatory environmental requirements including those prescribed elsewhere in these specifications.

1.3 The Contractor shall take all measures and precautions to avoid any nuisance or disturbance arising from the execution of the Works. This shall wherever possible be achieved by suppression of the nuisance at source rather than abatement of the nuisance once generated.

1.4 In the event of any spoil, debris, waste or any deleterious substance from the site being deposited on any adjacent land, the Contractor shall immediately remove all such material and restore the affected area to its original state to the satisfaction of the Engineer.

2 WATER QUALITY

2.1 The Contractor shall prevent any interference with the supply to or abstraction from, and prevent any pollution of, water resources (including underground percolating water) as a result of the execution of the Works.

2.2 Areas where water is regularly or repetitively used for dust suppression purposes shall be laid to fall to specially-constructed settlement tanks to permit sedimentation of particulate matter. After settlement, the water may be reused for dust suppression and rinsing.

2.3 All water and other liquid waste products arising on the site shall be collected and disposed of at a location on or off the site and in a manner that shall not cause nuisance or pollution.

2.4 The Contractor shall not discharge or deposit any matter arising from the execution of the Works into any waters except with the permission of the Engineer and the regulatory authorities concerned.

2.5 The Contractor shall at all times ensure that all existing stream courses and drains within, and adjacent to, the site are kept safe and free from any debris and any materials arising from the Works.

2.6 The Contractor shall protect all watercourses, waterways, ditches, canals, drains, lakes and the like from pollution as a result of the execution of the Works.

3 AIR QUALITY

3.1 The Contractor shall devise and arrange methods of working to minimize dust, gaseous or other air-borne emissions and carry out the Works in such a manner as to minimize adverse impacts on air quality.

3.2 The Contractor shall utilize effective water sprays during delivery, manufacture, processing and handling of materials when dust is likely to be created, and to dampen stored materials during dry and windy weather. Stockpiles of friable materials shall be covered with clean tarpaulins, with application of sprayed water during dry and windy weather. Stockpiles of material or debris shall be dampened prior to their movement, except where this is contrary to the Specifications.

3.3 Any vehicle with an open load-carrying area used for transporting potentially dust producing material shall have properly fitting side and tail boards. Materials having the potential to produce dust shall not be loaded to a level higher than the side and tail boards, and shall be covered with a clean tarpaulin in good condition. The tarpaulin shall be properly secured and extended at least 300 mm over the edges of the side and tail boards.

3.4 In the event that the Contractor is permitted to use gravel or earth roads for haulage, he shall provide suitable measures for dust palliation, if these are, in the opinion of the Engineer, necessary. Such measures may include sprinkling water on the road surface at regular intervals.

4 NOISE

4.1 The Contractor shall consider noise abutment measures in his planning and execution of the Works.

4.2 The Contractor shall take all necessary measures so that the operation of all mechanical equipment and construction processes on and off the site shall not cause any unnecessary or excessive noise, taking into account applicable environmental requirements. The Contractor shall use all necessary measures and shall maintain all plant and silencing equipment in good condition so as to minimize the noise emission during construction works.

5 CONTROL OF WASTES

5.1 The Contractor shall control the disposal of all forms of waste generated by the construction operations and in all associated activities. No uncontrolled deposition or dumping shall be permitted. Wastes to be so controlled shall include, but shall not be limited to, all forms of fuel and engine oils, all types of bitumen, cement, surplus aggregates, gravels, bituminous mixes etc. The Contractor shall make specific provision for the proper disposal of these and any other waste products, conforming to local regulations and acceptable to the Engineer.

6 EMERGENCY RESPONSE

6.1 The Contractor shall plan and provide for remedial measures to be implemented in the event of occurrence of emergencies such as spillages of oil or bitumen or chemicals.

6.2 The Contractor shall provide the Engineer with a statement of the measures he intends to implement in the event of such an emergency, which shall include a statement of how he intends to provide personnel adequately trained to implement such measures.

7. MEASUREMENT

7.1 No separate measurement shall be made in respect of compliance by the Contractor with these provisions. The Contractor shall be deemed to have made allowance for such compliance with these provisions in the preparation of his prices for items of work included in the Bill of Quantities and full compensation for such compliance will be deemed to be covered by them.

502 PRIME COAT OVER GRANULAR BASE

502.1 Scope

This work shall consist of the application of a single coat of low viscosity liquid bituminous material to a porous granular surface preparatory to the superimposition of bituminous treatment or mix. The work shall be carried out on a previously prepared granular/ stabilized surface to Clause 501.8.

502.2 Materials

502.2.1 The primer shall be cationic bitumen emulsion SS1 grade conforming to IS:8887 or medium curing cutback bitumen conforming to IS:217 or as specified in the Contract.

502.2.2 Quantity of SS1 grade bitumen emulsion for various types of granular surface shall be as given in Table 500-3.

Table 500-3 : Quantity of Bitumen Emulsion for Various Types of Granular Surfaces

Type of Surface	Rate of Spray (kg/sq.m)
WMM/WBM	0.7–1.0
Stabilized soil bases/Crusher Run Macadam	0.9–1.2

502.2.3 Cutback for primer shall not be prepared at the site. Type and quantity of cutback bitumen for various types of granular surface shall be as given in Table 500-4.

Table 500-4 : Type and Quantity of Cutback Bitumen for Various Types of Granular Surface

Type of Surface	Type of Cutback	Rate of Spray (kg/sq.m)
WMM/WBM	MC 30	0.6–0.9
Stabilized soil bases/ Crusher Run Macadam	MC 70	0.9–1.2

502.2.4 The correct quantity of primer shall be decided by the Engineer and shall be such that it can be absorbed by the surface without causing run-off of excessive primer and to achieve desired penetration of about 8-10 mm.

502.3 Weather and Seasonal Limitations

Primer shall not be applied during a dust storm or when the weather is foggy, rainy or windy or when the temperature in the shade is less than 100C. Cutback bitumen as primer shall not

be applied to a wet surface. Surfaces which are to receive emulsion primer should be damp, but no free or standing water shall be present. Surface can be just wet by very light sprinkling of water.

502.4 Construction

502.4.1 Equipment

The primer shall be applied by a self-propelled or towed bitumen pressure sprayer equipped for spraying the material uniformly at specified rates and temperatures. Hand spraying shall not be allowed except in small areas, inaccessible to the distributor, or in narrow strips where primer shall be sprayed with a pressure hand sprayer, or as directed by the Engineer.

502.4.2 Preparation of Road Surface

The granular surface to be primed shall be swept clean by power brooms or mechanical sweepers and made free from dust. All loose material and other foreign material shall be removed completely. If soil/ moorum binder has been used in the WBM surface, part of this should be brushed and removed to a depth of about 2 mm so as to achieve good penetration.

502.4.3 Application of Bituminous Primer

After preparation of the road surface as per Clause 502.4.2, the primer shall be sprayed uniformly at the specified rate. The method for application of the primer will depend on the type of equipment to be used, size of nozzles, pressure at the spray bar and speed of forward movement. The Contractor shall demonstrate at a spraying trial, that the equipment and method to be used is capable of producing a uniform spray, within the tolerances specified.

No heating or dilution of SS1 bitumen emulsion and shall be permitted at site. Temperature of cutback bitumen shall be high enough to permit the primer to be sprayed effectively though the jets of the spray and to cover the surface uniformly.

502.4.4 Curing of Primer and Opening to Traffic

A primed surface shall be allowed to cure for at least 24 hours or such other higher period as is found to be necessary to allow all the moisture/volatiles to evaporate before any subsequent surface treatment or mix is laid. Any unabsorbed primer shall first be blotted with a light application of sand, using the minimum quantity possible. A primed surface shall not be opened to traffic other than that necessary to lay the next course.

502.5 Quality Control of Work

For control of the quality of materials and the works carried out, the relevant provisions of Section 900 shall apply.

502.6 Arrangements for Traffic

During construction operations, arrangements for traffic shall be made in accordance with the provisions of Clause 112.

502.7 Measurement for Payment

Prime coat shall be measured in terms of surface area of application in square metres.

502.8 Rate

The contract unit rate for prime coat shall be payment in full for carrying out the required operations including full compensation for all components listed in Clause 401.7 (i) to (v) and as applicable to the work specified in these Specifications. Payment shall be made on the basis of the provision of prime coat at an application rate of quantity at 0.6 kg per square metre or at the rate specified in the Contract, with adjustment, plus or minus, for the variation between this quantity and the actual quantity approved by the Engineer after the preliminary trials referred to in Clause 502.4.3.

503 TACK COAT

503.1 Scope

The work shall consist of the application of a single coat of low viscosity liquid bituminous material to existing bituminous, cement concrete or primed granular surface preparatory to the superimposition of a bituminous mix, when specified in the Contract or as instructed by the Engineer. The work shall be carried out on a previously prepared surface in accordance with Clause 501.8.

503.2 Materials

The binder used for tack coat shall be either Cationic bitumen emulsion (RS 1) complying with IS:8887 or suitable low viscosity paving bitumen of VG 10 grade conforming to IS:73. The use of cutback bitumen RC:70 as per IS:217 shall be restricted only for sites at sub-zero temperatures or for emergency applications as directed by the Engineer. The type and grade of binder for tack coat shall be as specified in the Contract or as directed by the Engineer.

503.3 Weather and Seasonal Limitations

Bituminous material shall not be applied during a dust storm or when the weather is foggy, rainy or windy or when the temperature in the shade is less than 10°C. Where the tack coat

consists of emulsion, the surface shall be slightly damp, but not wet. Where the tack coat is of cutback bitumen, the surface shall be dry.

503.4 Construction

503.4.1 Equipment

The tack coat shall be applied by a self-propelled or towed bitumen pressure sprayer, equipped for spraying the material uniformly at a specified rate. Hand spraying shall not be permitted except in small areas, inaccessible to the distributor, or narrow strips, shall be sprayed with a pressure hand sprayer, or as directed by the Engineer.

503.4.2 Preparation of Base

The surface on which the tack coat is to be applied shall be clean and free from dust, dirt, and any extraneous material, and be otherwise prepared in accordance with the requirements of Clauses 501.8. The granular or stabilized surfaces shall be primed as per Clause 502. Immediately before the application of the tack coat, the surface shall be swept clean with a mechanical broom, and high pressure air jet, or by other means as directed by the Engineer.

503.4.3 Application of Tack Coat

The application of tack coat shall be at the rate specified in Table 500-5, and it shall be applied uniformly. If rate of application of Tack Coat is not specified in the contract, then it shall be the rate specified in Table 500-5. No dilution or heating at site of RS1 bitumen emulsion shall be permitted. Paving bitumen if used for tack coat shall be heated to appropriate temperature in bitumen boilers to achieve viscosity less than 2 poise. The normal range of spraying temperature for a bituminous emulsion shall be 20°C to 70°C and for cutback, 50°C to 80°C. The method of application of tack coat will depend on the type of equipment to be used, size of nozzles, pressure at the spray bar, and speed or forward movement. The Contractor shall demonstrate at a spraying trial, that the equipment and method to be used is capable of producing a uniform spray, within the tolerances specified.

Table 500-5 : Rate of Application of Tack Coat

Type of Surface	Rate of Spray of Binder in Kg per sq. m
Bituminous surfaces	0.20 – 0.30
Granular surfaces treated with primer	0.25 – 0.30
Cement concrete pavement	0.30 – 0.35

503.4.4 Curing of Tack Coat

The tack coat shall be left to cure until all the volatiles have evaporated before any subsequent construction is started. No plant or vehicles shall be allowed on the tack coat other than those essential for the construction.

503.5 Quality Control of Work

For control of the quality of materials and the works carried out, the relevant provisions of Section 900 shall apply.

503.6 Arrangements for Traffic

During the period of construction, arrangements for traffic shall be made in accordance with the provisions of Clause 112.

503.7 Measurement for Payment

Tack coat shall be measured in terms of surface area of application in square metres.

503.8 Rate

The contract unit rate for tack coat shall be payment in full for carrying out the required operations including for all components listed in Clause 401.8 (i) to (v) and as applicable to the work specified in these Specifications. The rate shall cover the provision of tack coat, at 0.2 kg per square metre or at the rate specified in the Contract, with the provision that the variation between this quantity and actual quantity of bitumen used will be assessed and the payment adjusted accordingly.

504 BITUMINOUS MACADAM

504.1 Scope

This work shall consist of construction in a single course having 50 mm to 100 mm thickness or in multiple courses of compacted crushed aggregates premixed with a bituminous binder on a previously prepared base to the requirements of these Specifications. Since the bituminous macadam is an open-graded mix, there is a potential that it may trap water or moisture vapour within the pavement system. Therefore, adjacent layer (shoulders) should have proper drainage quality to prevent moisture-induced damage to the BM.

504.2 Materials

504.2.1 Bitumen

The bitumen shall be viscosity graded paving bitumen complying with Indian Standard Specification for paving bitumen, IS:73 or as specified in the Contract. The type and grade of

bitumen to be used would depend upon the climatic conditions and the traffic. Guidelines for selection of bitumen are given in Table 500-1.

504.2.2 Coarse Aggregates

The coarse aggregates shall consist of crushed rock, crushed gravel or other hard material retained on 2.36 mm sieve. It shall be clean, hard, durable and cubical shape, free from dust and soft organic and other deleterious substances. The aggregate shall satisfy the physical requirements specified in Table 500-6. Where crushed gravel is proposed for use as aggregate, not less than 90 percent by weight of the crushed material retained on 4.75 mm sieve shall have at least two fractured faces resulting from crushing operation. Before approval of the source, the aggregates shall be tested for stripping. Where the Contractor's selected source of aggregates have poor affinity for bitumen, as a condition for the approval of that source, the bitumen shall be treated with approved anti-stripping agents, as per the manufacturer's recommendations, without additional payment.

504.2.3 Fine Aggregates

Fine aggregates shall consist of crushed or naturally occurring mineral material, or a combination of two, passing 2.36 mm sieve and retained on 75 micron sieve. It shall be clean, hard, durable, free from dust and soft organic and other deleterious substances. Natural sand shall not be used in the binder course.

Table 500-6 : Physical Properties of Coarse Aggregate

Property	Test	Requirement	Test method
Cleanliness	Grain size analysis	Max. 5% passing 0.075 micron	IS:2386 Part I
Particle shape	Combined Flakiness and Elongation Indices	Max. 35%	IS:2386 Part I
Strength	Los Angeles Abrasion Value or	Max. 40%	IS:2386 Part IV
	Aggregate Impact Value	Max. 30%	IS:2386 Part IV
Durability	Soundness (Sodium or Magnesium)	5 cycles	
	Sodium Sulphate	Max. 12%	IS:2386 Part V
	Magnesium Sulphate	Max. 18%	IS:2386 Part V
Water absorption	Water absorption	Max. 2%	IS:2386 Part III
Stripping	Coating and Stripping of Bitumen Aggregate	Min. Retained Coating 95%	IS:6241
Water sensitivity	Retained Tensile strength*	Min. 80%	AASHTO 283

* If the minimum retained tensile strength falls below 80 percent, use of anti stripping agent is recommended to meet the minimum requirements.

504.2.4 Aggregate Grading and Binder Content

The combined grading of the coarse aggregates and fine aggregates, when tested in accordance with IS:2386 Part 1, wet sieving method, shall conform to limits given in Table 500-8. The type and quantity of bitumen and appropriate thickness is also given in Table 500-7.

504.2.5 Proportioning of Material

The combined aggregate grading shall not vary from the lower limit on one sieve to the higher limit on the adjacent sieve to avoid gap grading. The aggregate may be proportioned and blended to produce a uniform mix complying with the requirements in Table 500-7. The binder content shall be within a tolerance of ± 0.3 percent by weight of total mix when individual specimens are taken for quality control tests in accordance with the provisions of Section 900.

504.3 Construction Operation

504.3.1 Weather and Seasonal Limitations

The provisions of Clause 501.5.1 shall apply.

Table 500-7 : Aggregate Grading and Bitumen Content

Grading	1	2
Nominal maximum aggregate size*	40 mm	19 mm
Layer thickness	80 -100 mm	50 -75 mm
IS Sieve size (mm)	Cumulative % by weight of total aggregate passing	
45	100	
37.5	90-100	
26.5	75-100	100
19	–	90 – 100
13.2	35-61	56 – 88
4.75	13 – 22	16 – 36
2.36	4 – 19	4 – 19
0.3	2 – 10	2 – 10
0.075	0 – 8	0 – 8
Bitumen content ** percent by mass of total mix	3.3**	3.4**

* Nominal maximum aggregate size is the largest specified sieve size upon which any of the aggregate material is retained.

** Corresponds to specific gravity of the Aggregate being 2.7. In case aggregates have specific gravity more than 2.7, bitumen content can be reduced proportionately. Further, for regions where highest daily mean air temperature is 30°C or lower and lowest daily mean air temperature is –10°C or lower, the bitumen content may be increased by 0.5 percent.

504.3.2 Preparation of the Base

The base on which bituminous macadam is to be laid shall be prepared, shaped and compacted to the required profile in accordance with Clauses 501.8 and 902.3 as appropriate, and a prime coat, shall be applied in accordance with Clause 502 where specified, or as directed by the Engineer. The surface shall be thoroughly swept clean by a mechanical broom, and the dust removed by compressed air. In locations where mechanical broom cannot get access, other approved methods shall be used as directed by the Engineer.

504.3.3 Tack Coat

A tack coat in accordance with Clause 503 shall be applied as required under the Contract or as directed by the Engineer.

504.3.4 Preparation and Transportation of the Mix

The provisions of Clauses 501.3 and 501.4 shall apply.

504.3.5 Spreading

The provisions of Clause 501.5.3 shall apply.

504.3.6 Rolling

Compaction shall be carried out in accordance with the provisions of Clauses 501.6 and 501.7.

Rolling shall be continued until the specified density is achieved, or where no density is specified, until there is no further movement under the roller. The required frequency of testing is defined in Clause 903.

504.4 Surface Finish and Quality Control of Work

The surface finish of the completed construction shall conform to the requirements of Clause 902. For control of the quality of materials and the works carried out, the relevant provisions of Section 900 shall apply.

504.5 Protection of the Layer

The bituminous macadam shall be covered with either the next pavement course or wearing course, as the case may be, within a maximum of forty-eight hours. If there is to be any delay, by the Contractor the course shall be covered by a seal coat to the requirement of Clause 512 before opening to any traffic. The seal coat in such cases shall be considered incidental to the work and shall not be paid for separately.

504.6 Arrangements for Traffic

During the period of construction, arrangements for traffic shall be made in accordance with the provisions of Clause 112.

504.7 Measurement for Payment

Bituminous macadam shall be measured as finished work in cubic metres, or by weight in metric tonnes, where used as regulating course, or square metres at the specified thickness as indicated in the Contract or shown on the drawings, or as otherwise directed by the Engineer.

504.8 Rate

The contract unit rate for bituminous macadam shall be payment in full for carrying out the required operations as specified. The rate shall include cost for all components listed in Clause 501.8.8.2.

505 DENSE BITUMINOUS MACADAM

505.1 Scope

The specification describes the design and construction procedure for Dense Bituminous Macadam, (DBM), for use mainly, but not exclusively, in base/binder and profile corrective courses. The work shall consist of construction in a single or multiple layers of DBM on a previously prepared base or sub-base. The thickness of a single layer shall be 50 mm to 100 mm.

505.2 Materials

505.2.1 Bitumen

The bitumen shall be viscosity grade paving bitumen complying with the Indian Standard Specification IS:73, modified bitumen complying with Clause 501.2.1 or as otherwise specified in the Contract.

The type and grade of bitumen to be used shall be specified in the Contract.

505.2.2 Coarse Aggregates

The coarse aggregates shall consist of crushed rock, crushed gravel or other hard material retained on 2.36 mm sieve. They shall be clean, hard, durable, of cubical shape, free from dust and soft or friable matter, organic or other deleterious substances. Where the Contractor's selected source of aggregates has poor affinity for bitumen, the Contractor shall produce test results that with the use of anti-stripping agents, the stripping value is improved to satisfy the specification requirements. The Engineer may approve such a source and as a condition for the approval of that source, the bitumen shall be treated with an approved anti-stripping agent, as per the manufacturer's recommendations, at the cost of the Contractor. The aggregates shall satisfy the requirements specified in Table 500-8.

Where crushed gravel is proposed for use as aggregate, not less than 90 percent by weight of the crushed material retained on the 4.75 mm sieve shall have at least two fractured faces.

505.2.3 Fine Aggregates

Fine aggregates shall consist of crushed or naturally occurring mineral material, or a combination of the two, passing the 2.36 mm sieve and retained on the 75 micron sieve. These shall be clean, hard, durable, dry and free from dust, and soft or friable matter, organic or other deleterious matter. Natural sand shall not be allowed in binder courses. However, natural sand upto 50 percent of the fine aggregate may be allowed in base courses. The fine aggregate shall have a sand equivalent value of not less than 50 when tested in accordance with the requirement of IS:2720 (Part 37). The plasticity index of the fraction passing the 0.425 mm sieve shall not exceed 4, when tested in accordance with IS:2720 (Part 5).

505.2.4 Filler

Filter shall consist of finely divided mineral matter such as rock dust, hydrated lime or cement approved by the Engineer. The filler shall be graded within the limits indicated in Table 500-9.

The filler shall be free from organic impurities and have a plasticity Index not greater than 4. The Plasticity Index requirement shall not apply if filler is cement or lime. Where the aggregates fail to meet the requirements of the water sensitivity test in Table 500-8, then 2 percent by total weight of aggregate, of hydrated lime shall be used and percentage of fine aggregate reduced accordingly.

505.2.5 Aggregate Grading and Binder Content

505.2.5.1 When tested in accordance with IS:2386 Part 1 (wet sieving method), the combined grading of the coarse and fine aggregates and filler for the particular mixture shall fall within the limits given in Table 500-10 for grading 1 or 2 as specified in the Contract. To avoid gap grading, the combined aggregate gradation shall not vary from the lower limit on one sieve to higher limit on the adjacent sieve.

Table 500-8 : Physical Requirements for Coarse Aggregate for Dense Bituminous Macadam

Property	Test	Specification	Method of Test
Cleanliness (dust)	Grain size analysis	Max 5% passing 0.075 mm sieve	IS:2386 Part I
Particle shape	Combined Flakiness and Elongation Indices*	Max 35%	IS:2386 Part I
Strength	Los Angeles Abrasion Value or Aggregate Impact Value	Max 35% Max 27%	IS:2386 Part IV
Durability	Soundness either :Sodium Sulphate or Magnesium Sulphate	Max 12% Max 18%	IS:2386 Part V
Water Absorption	Water Absorption	Max 2%	IS:2386 Part III
Stripping	Coating and Stripping of Bitumen Aggregate Mix	Minimum retained coating 95%	IS:6241
Water Sensitivity	Retained Tensile Strength**	Min. 80%	AASHTO 283

* To determine this combined proportion, the flaky stone from a representative sample should first be separated out. Flakiness index is weight of flaky stone metal divided by weight of stone sample. Only the elongated particles be separated out from the remaining (non-flaky) stone metal. Elongation index is weight of elongated particles divided by total non-flaky particles. The values of flakiness index and elongation index so found are added up.

** If the minimum retained tensile test strength falls below 80 percent, use of anti stripping agent is recommended to meet the requirement.

Table 500-9 : Grading Requirements for Mineral Filler

IS sieve (mm)	Cumulative Percent Passing by Weight of Total Aggregate
0.6	100
0.3	95 – 100
0.075	85 – 100

Table 500-10 : Composition of Dense Graded Bituminous Macadam

Grading	1	2
Nominal aggregate size*	**37.5 mm**	**26.5 mm**
Layer thickness	**75 – 100 mm**	**50 – 75 mm**
IS Sieve[1] (mm)	**Cumulative % by weight of total aggregate passing**	
45	100	
37.5	95 – 100	100
26.5	63-93	90-100
19	–	71-95
13.2	55-75	56-80
9.5	–	–
4.75	38-54	38-54
2.36	28-42	28-42
1.18	–	–
0.6	–	–
0.3	7 – 21	7 – 21
0.15	–	–
0.075	2 – 8	2-8
Bitumen content % by mass of total mix	Min 4.0**	Min 4.5**

* The nominal maximum particle size is the largest specified sieve size upon which any of the aggregate is retained.

** Corresponds to specific gravity of aggregates being 2.7. In case aggregate have specific gravity more than 2.7, the minimum bitumen content can be reduced proportionately. Further the region where highest daily mean air temperature is 30°C or lower and lowest daily air temperature is – 10°C or lower, the bitumen content may be increased by 0.5 percent.

505.2.5.2 Bitumen content indicated in Table 500-10 is the minimum quantity. The quantity shall be determined in accordance with Clause 505.3.

505.3 Mix Design

The bitumen content required shall be determined following the Marshall mix design procedure contained in Asphalt Institute Manual MS–2.

The Fines to Bitumen (F/B) ratio by weight of total mix shall range from 0.6 to 1.2.

505.3.1 Requirements for the Mix

Apart from conformity with the grading and quality requirements for individual ingredients, the mixture shall meet the requirements set out in Table 500-11.

Table 500-11 : Requirements for Dense Graded Bituminous Macadam

Properties	Viscosity Grade Paving Bitumen	Modified bitumen		Test Method
		Hot climate	Cold climate	
Compaction level	75 blows on each face of the specimen			
Minimum stability (kN at 600C)	9.0	12.0	10.0	AASHTO T245
Marshall flow (mm)	2 – 4	2.5 – 4	3.5 – 5	AASHTO T245
Marshall Quotient $\left(\frac{\text{Stability}}{\text{Flow}}\right)$	2 – 5	2.5 – 5		MS-2 and ASTM D2041
% air voids	3 – 5			
% Voids Filled with Bitumen (VFB)	65 – 75			
Coating of aggregate particle	95% minimum			IS:6241
Tensile Strength ratio	80% Minimum			AASHTO T 283
% Voids in Mineral Aggregate (VMA)	Minimum percent voids in mineral aggregate (VMA) are set out in Table 500-13			

505.3.2 Binder Content

The binder content shall be optimized to achieve the requirements of the mix set out in Table 500-11. The binder content shall be selected to obtain 4 percent air voids in the mix design. The Marshall method for determining the optimum binder content shall be adopted as described in the Asphalt Institute Manual MS-2.

Where maximum size of the aggregate is more than 26.5 mm, the modified Marshall method using 150 mm diametre specimen described in MS-2 and ASTM D 5581 shall be used. This method requires modified equipment and procedures. When the modified Marshall test is used, the specified minimum stability values in Table 500-12 shall be multiplied by 2.25, and the minimum flow shall be 3 mm.

Table 500-12 : Minimum Percent Voids In Mineral Aggregate (VMA)

Nominal Maximum Particle Size[1] (mm)	Minimum VMA Percent Related to Design Percentage Air voids		
	3.0	4.0	5.0
26.5	11.0	12.0	13.0
37.5	10.0	11.0	12.0

Note : Interpolate minimum voids in the mineral aggregate (VMA) for designed percentage air voids values between those listed.

505.3.3 Job Mix Formula

The Contractor shall submit to the Engineer for approval at least 21 days before the start the work, the job mix formula proposed for use in the works, together with the following details:

i) Source and location of all materials;

ii) Proportions of all materials expressed as follows:

   a) Binder type, and percentage by weight of total mix;

   b) Coarse aggregate/Fine aggregate/Mineral filler as percentage by weight of total aggregate including mineral filler;

iii) A single definite percentage passing each sieve for the mixed aggregate;

iv) The individual gradings of the individual aggregate fraction, and the proportion of each in the combined grading;

v) The results of mix design such as maximum specific gravity of loose mix (Gmm), compacted specimen densities, Marshall stability,flow, air voids, VMA, VFB and related graphs and test results of AASHTO T 283 Moisture susceptibility test;

vi) Where the mixer is a batch mixer, the individual weights of each type of aggregate, and binder per batch;

vii) Test results of physical characteristics of aggregates to be used;

viii) Mixing ternperature and compacting temperature.

While establishing the job mix formula, the Contractor shall ensure that it is based on a correct and truly representative sample of the materials that will actually be used in the work and that the mix and its different ingredients satisfy the physical and strength requirements of these Specifications.

Approval of the job mix formula shall be based on independent testing by the Engineer for which samples of all ingredients of the mix shall be furnished by the Contractor as required by the Engineer.

The approved job mix formula shall remain effective unless and until a revised Job Mix Formula is approved. Should a change in the source of materials be proposed, a new job mix formula shall be forwarded by the Contractor to the Engineer for approval before the placing of the material.

505.3.4 Plant Trials – Permissible Variation in Job Mix Formula

Once the laboratory job mix formula is approved, the Contractor shall carry out plant trials to establish that the plant can produce a uniform mix conforming to the approved job mix formula. The permissible variations of the individual percentages of the various ingredients in the actual mix from the job mix formula to be used shall be within the limits as specified in Table 500-13 and shall remain within the gradation band. These variations are intended to apply to individual specimens taken for quality control tests in accordance with Section 900.

Table 500-13 : Permissible Variations in the Actual Mix from the Job Mix Formula

Description	Base/binder Course
Aggregate passing 19 mm sieve or larger	± 8%
Aggregate passing 13.2 mm, 9.5 mm	± 7%
Aggregate passing 4.75 mm	± 6%
Aggregate passing 2.36 mm, 1.18 mm, 0.6 mm	± 5%
Aggregate passing 0.3 mm, 0.15 mm	± 4%
Aggregate passing 0.075 mm	± 2%
Binder content	± 0.3%
Mixing temperature	± 10°C

505.3.5 Laying Trials

Once the plant trials have been successfully completed and approved, the Contractor shall carry out laying trials, to demonstrate that the proposed mix can be successfully laid and compacted all in accordance with Clause 501. The laying trial shall be carried out on a

suitable area which is not to form part of the works. The area of the laying trials shall be a minimum of 100 sq.m of construction similar to that of the project road, and it shall be in all respects, particularly compaction, the same as the project construction, on which the bituminous material is to be laid.

The Contractor shall previously inform the Engineer of the proposed method for laying and compacting the material. The plant trials shall then establish if the proposed laying plant, compaction plant, and methodology is capable of producing satisfactory results. The density of the finished paving layer shall be determined by taking cores, no sooner than 24 hours after laying, or by other approved method. The compacted layers of Dense Graded Bituminous Macadam (DBM) shall have a minimum field density equal to or more than 92% of the density based on theoretical maximum specific gravity (G_{mm}) obtained on the day of compaction in accordance with ASTM D 2041.

Once the laying trials have been approved, the same plant and methodology shall be applied to the laying of the material on the project, and no variation of either shall be acceptable, unless approved in writing by the Engineer, who may at his discretion require further laying trials.

505.4 Construction Operations

505.4.1 Weather and Seasonal Limitations

The provisions of Clause 501.5.1 shall apply.

505.4.2 Preparation of Base

The base on which Dense Graded Bituminous Material is to be laid shall be prepared in accordance with Clauses 501 and 902 as appropriate, or as directed by the Engineer.

505.4.3 Geosynthetics

Where Geosynthetics are specified in the Contract, this shall be in accordance with the requirements stated in Clause 703.

505.4.4 Stress Absorbing Layer

Where a stress absorbing layer is specified in the Contract, this shall be applied in accordance with the requirements of Clause 517.

505.4.5 Prime Coat

Where the material on which the dense bituminous macadam is to be laid is other than a

bitumen bound layer, a prime coat shall be applied, as specified, in accordance with the provisions of Clause 502, or as directed by the Engineer.

505.4.6 Tack Coat

Where the material on which the dense bituminous macadam is to be laid is either bitumen bound layer or primed granular layer, tack coat shall be applied, as specified, in accordance with the provisions of Clause 503, or as directed by the Engineer.

505.4.7 Mixing and Transportation of the Mix

The provisions as specified in Clauses 501.3 and 501.4 shall apply. Table 500-2 gives the mixing, laying and rolling temperature for dense mixes using viscosity grade bitumen. In case of modified bitumen, the temperature of mixing and compaction shall be higher than the mix with viscosity grade bitumen. The exact temperature depends upon the type and amount of modifier used and shall be adopted as per the recommendations of the manufacturer. In order to have uniform quality, the plant shall be calibrated from time to time.

505.4.8 Spreading

The provisions of Clauses 501.5.3 and 501.5.4 shall apply.

505.4.9 Rolling

The general provisions of Clauses 501.6 and 501.7 shall apply, as modified by the approved laying trials. The compaction process shall be carried out by the same plant, and using the same method, as approved in the laying trials, which may be varied only with the express approval of the Engineer in writing.

505.5 Opening to Traffic

It shall be ensured that the traffic is not allowed without the approval of the Engineer in writing, on the surface until the dense bituminous layer has cooled to the ambient temperature.

505.6 Surface Finish and Quality Control of Work

The surface finish of the completed construction shall conform to the requirements of Clause 902. All materials and workmanship shall comply with the provisions set out in Section 900 of these Specifications.

505.7 Arrangements for Traffic

During the period of construction, arrangements for traffic shall be made in accordance with the provisions of Clause 112.

505.8 Measurement for Payment

Dense Graded Bituminous Materials shall be measured as finished work either in cubic metres, tonnes or by the square metre at a specified thickness as indicated in the Contract drawings, or documents, or as otherwise directed by the Engineer.

505.9 Rate

The contract unit rate for Dense Graded Bituminous Macadam shall be payment in full for carrying out all the required operations as specified and shall include, to all components listed in Clause 501.8.8.2. The rate shall include the provision of bitumen, at 4 percent and 4.5 percent by weight of the total mixture for grading 1 and grading 2 respectively.

The variation in actual percentage of bitumen used shall be assessed and the payment adjusted plus or minus accordingly.

506 SAND ASPHALT BASE COURSE

506.1 Scope

This work shall consist of a base course composed of a mixture of sand, mineral filler where required and bituminous binder, placed and compacted upon a prepared and accepted sub-base in accordance with these Specifications and the lines, levels, grades, dimensions and cross sections shown on the Drawings or as directed by the Engineer.

Note: Sand Asphalt Base course is used in special situations like quality coarse aggregates not being available within economical leads and/or water needed for conventional base course not being readily available, as in desert areas.

506.2 Materials

506.2.1 Bitumen

The bitumen shall be paving bitumen of viscosity grade VG 30 or VG 20, as specified in the Contract, conforming to IS:73.

506.2.2 Sand

The sand shall be clean, naturally occurring or blended material free from any deleterious substances, dry and well graded within the limits given in Table 500-14 and with other physical properties conforming to the requirements of this Table.

Table 500-14 : Sand Grading and Physical Requirements

Sieve Size (mm)	Cumulative Percentage by Weight of Total Aggregate Passing
9.5	100
4.75	85 – 100
2.36	80 – 100
1.18	70 – 98
0.60	55 – 95
0.30	30 – 75
0.15	10 – 40
0.075	4 – 10
Plasticity Index (%)	6 max.
Sand equivalent (IS:2720 Part 37)	30 min.
Los Angeles Abrasion Value (IS:2386, Part 4)	40 max.

Note : Maximum thickness for sand asphalt is 80 mm.

506.2.3 Filler

When required, filler shall consist of finely divided mineral matter such as rock dust, hydrated lime or cement as approved by the Engineer. The filler shall conform to Clause 505.2.4.

506.3 Mix Design

506.3.1 Requirements for the Mix

Apart from conformity with the grading and quality requirements for individual ingredients, the mixture shall meet the requirements set out in Table 500-15.

506.3.2 Binder Content

The binder content shall be optimized to achieve the requirements of the mix set out in Table 500-15. The Marshall method for determining the optimum binder content shall be adopted as described in the Asphalt Institute Manual MS-2.

Table 500-15 : Requirements for Sand Asphalt Base Course

Parameter	Requirement
Minimum stability (kN at 60°C)	2.0
Minimum flow (mm)	2
Compaction level (Number of blows)	2 x 75
Percent air voids	3–5
Percent voids in mineral aggregate (VMA)	16 min.
Percent voids filled with bitumen (VFB)	65-75

506.3.3 Job Mix Formula

The Contractor shall develop the job mix formula proposed for use in the works and submit it to the Engineer for approval together with the following details :

i) Source and location of all materials;

ii) Proportions of all materials expressed as follows where each is applicable:

a) Binder, as percentage by weight of total mixture;

b) Sand/Mineral filler as percentage by weight of total aggregate including mineral filler;

iii) A single definite percentage passing each sieve for the mixed aggregate;

iv) The results of tests enumerated in Table 500-15 as obtained by the Contractor;

v) Test results of physical characteristics of aggregates to be used;

vi) Mixing temperature and compacting temperature.

While working out the job mix formula, the Contractor shall ensure that it is based on a correct and truly representative sample of the materials that will actually be used in the work and that the mixture and its different ingredients satisfy the physical and strength requirements of these Specifications.

Approval of the job mix formula shall be based on independent testing by the Engineer for which joint samples of all ingredients of the mix shall be furnished by the Contractor as required by the former.

The approved job mix formula shall remain effective unless and until modified by the Engineer. Should a change in the source of materials be proposed, a new job mix formula shall be established by the Contractor and approved by the Engineer before actually using the materials.

506.3.4 Permissible Variation from Job Mix Formula

The Contractor shall produce a uniform mix conforming to the approved job mix formula, subject to the permissible variations of the individual percentages of the various ingredients in the actual mix from the job mix formula to be used, within the limits as specified in Table 500-12, with the condition that the gradation after the variation remains within the gradation envelop. These variations are intended to apply to individual specimens taken for quality control tests in accordance with Section 900.

506.4 Construction Operations

506.4.1 Weather and Seasonal Limitations

Clause 501.5.1 shall apply.

506.4.2 Preparation of Base

The surface on which Sand Asphalt Base course Material is to be laid shall be prepared, shaped and graded in the profile required for the particular layer in accordance with Clauses 501 and 902 as appropriate or as directed by the Engineer. The surface shall be thoroughly swept clean free from dust and foreign matter using a mechanical brush, and the dust blown off by compressed air. In confined locations where mechanical plant cannot get access, other methods shall be used as approved by the Engineer. A prime coat, where specified, shall be applied in accordance with Clause 502 or as directed by the Engineer.

506.4.3 Tack Coat

A tack coat over the base shall be applied in accordance with Clause 503, or otherwise as directed by the Engineer.

506.4.4 Preparation and Transportation of the Mixture

The provisions of Clauses 501.3 and 501.4 shall apply.

506.4.5 Spreading

The provisions of Clauses 501.5.2 to 501.5.4 shall apply. Laying must be accomplished at a suitable temperature to ensure proper compaction. Guidance for mixing and compaction temperature for the particular bitumen may be taken from Table 500-3 and shall correspond to a viscosity of 2 Poise (0.2 Pa.s) and 3 poise (0.3 Pa.s) respectively, based on the original (unaged) bitumen properties.

506.4.6 Rolling

Clause 501.6 shall apply. Generally the initial or breakdown rolling shall be done with 8-10 tonne static weight smooth-wheeled rollers. The intermediate rolling shall be done with 8–10 tonne static weight or vibratory rollers or with a pneumatic tyred roller of 12-15 tonne weight having a tyre pressure of at least 0.56 MPa. The finish rolling shall be done with 8–10 tonne deadweight smooth wheeled tandem rollers. The exact pattern of rolling shall be established at the laying trials.

506.5 Opening to Traffic

It shall be ensured that the traffic is not allowed without the express approval of the Engineer in writing, on the surface until the paved mat has cooled below 60°C in its entire depth.

506.6 Surface Finish and Quality Control of Work

The surface finish of the completed construction shall conform to the requirements of Clause 902.

For control of the quality of materials and the works carried out, the relevant provisions of Section 900 shall apply.

506.7 Arrangements for Traffic

During the period of construction, arrangements for traffic shall be made in accordance with the provisions of Clause 112.

506.8 Measurement for Payment

Sand Asphalt Base course materials shall be measured as finished work, for the area covered, in cubic metres, metric tonnes, or in square metres, at a specified thickness, as stated in the Contract.

506.9 Rate

The Contract unit rate for Sand Asphalt Base course materials shall be payment in full for carrying out the required operations including full compensation for all components listed in Clause 501.8.8.2 (i) to (x). The rate shall cover provision of 5 percent of bitumen by weight of the total mixture.

The variation in the actual percentage of bitumen used will be assessed and the rate, adjusted plus or minus, as applicable.

507 BITUMINOUS CONCRETE

507.1 Scope

This work shall consist of construction of Bituminous Concrete, for use in wearing and profile corrective courses. This work shall consist of construction in a single layer of bituminous concrete on a previously prepared bituminous bound surface. A single layer shall be 30 mm/40 mm/50 mm thick.

507.2 Materials

507.2.1 Bitumen

The bitumen shall conform to Clause 504.2.1.

507.2.2 Coarse Aggregates

The coarse aggregates shall be generally as specified in Clause 504.2.2, except that the aggregates shall satisfy the physical requirements of Table 500-16 and where crushed gravel is proposed for use as aggregate, not less than 95 percent by weight of the crushed material retained on the 4.75 mm sieve shall have at least two fractured faces.

Table 500-16 : Physical Requirements for Coarse Aggregate for Bituminous Concrete

Property	Test	Specification	Method of Test
Cleanliness (dust)	Grain size analysis	Max 5% passing 0.075 mm sieve	IS:2386 Part I
Particle shape	Combined Flakiness and Elongation Indices	Max 35%	IS:2386 Part I
Strength	Los Angeles Abrasion Value or Aggregate Impact Value	Max 30% Max 24%	IS:2386 Part IV
Durability	Soundness either:Sodium Sulphate or Magnesium Sulphate	Max 12% Max 18%	IS:2386 Part V
Polishing	Polished Stone Value	Min 55	BS:812-114
Water Absorption	Water Absorption	Max 2%	IS:2386 Part III
Stripping	Coating and Stripping of Bitumen Aggregate Mix	Minimum retained coating 95%	IS:6241
Water Sensitivity	Retained Tensile Strength*	Min 80%	AASHTO 283

* If the minimum retained tensile test strength falls below 80 percent, use of anti stripping agent is recommended to meet the requirement.

507.2.3 Fine Aggregates

The fine aggregates shall be all as specified in Clause 505.2.3.

507.2.4 Filler

Filler shall be as specified in Clause 505.2.4.

507.2.5 Aggregate Grading and Binder Content

When tested in accordance with IS:2386 Part 1 (Wet grading method), the combined grading of the coarse and fine aggregates and filler shall fall within the limits shown in Table 500-17. The grading shall be as specified in the Contract.

Table 500-17 : Composition of Bituminous Concrete Pavement Layers

Grading	1	2
Nominal aggregate size*	**19 mm**	**13.2 mm**
Layer thickness	**50 mm**	**30–40 mm**
IS Sieve[1] (mm)	**Cumulative % by weight of total aggregate passing**	
45		
37.5		
26.5	100	
19	90-100	100
13.2	59-79	90-100
9.5	52-72	70-88
4.75	35-55	53-71
2.36	28-44	42-58
1.18	20-34	34-48
0.6	15-27	26-38
0.3	10-20	18-28
0.15	5-13	12-20
0.075	2-8	4-10
Bitumen content % by mass of total mix	Min 5.2*	Min 5.4**

Notes :

* The nominal maximum particle size is the largest specified sieve size up on which any of the aggregate is retained.

** Corresponds to specific gravity of aggregate being 2.7. In case aggregate have specific gravity more than 2.7, the minimum bitumen content can be reduced proportionately. Further the region where highest daily mean air temperature is 30°C or lower and lowest daily air temperature is – 10°C or lower, the bitumen content may be increased by 0.5 percent

507.3 Mix Design

507.3.1 Requirements for the Mix

Clause 505.3.1 shall apply.

507.3.2 Binder Content

Clause 505.3.2 shall apply.

507.3.3 Job Mix Formula

Clause 505.3.3 shall apply.

507.3.4 Plant Trials – Permissible Variation in Job Mix Formula

The requirements for plant trials shall be as specified in Clause 505.3.4, and permissible limits for variation as given in Table 500-18.

Table 500-18 : Permissible Variations in Plant Mix from the Job Mix Formula

Description	Permissible Variation
Aggregate passing 19 mm sieve or larger	± 7%
Aggregate passing 13.2 mm, 9.5 mm	± 6%
Aggregate passing 4.75 mm	± 5%
Aggregate passing 2.36 mm, 1.18 mm, 0.6 mm	± 4%
Aggregate passing 0.3 mm, 0.15 mm	± 3%
Aggregate passing 0.075 mm	± 1.5%
Binder content	± 0.3%
Mixing temperature	± 10°C

507.3.5 Laying Trials

The requirements for laying trials shall be as specified in Clause 505.3.5. The compacted layers of bituminous concrete (BC) shall have a minimum field density equal to or more than 92 percent of the average theoretical maximum specific gravity (G_{mm}) obtained on the day of compaction in accordance with ASTM D2041.

507.4 Construction Operations

507.4.1 Weather and Seasonal Limitations

The provisions of Clause 501.5.1 shall apply.

507.4.2 Preparation of Base

The surface on which the bituminous concrete is to be laid shall be prepared in accordance with Clauses 501 and 902 as appropriate, or as directed by the Engineer. The surface shall be thoroughly swept clean by mechanical broom and dust removed by compressed air. In locations where a mechanical broom cannot get access, other approved methods shall be used as directed by the Engineer.

507.4.3 Geosynthetics

Where Geosynthetics are specified in the Contract, this shall be in accordance with the requirements stated in Clause 703.

507.4.4 Stress Absorbing Layer

Where a stress absorbing layer is specified in the Contract, this shall be applied in accordance with the requirements of Clause 517.

507.4.5 Tack Coat

The provisions as specified in Clause 504.4.6 shall apply.

507.4.6 Mixing and Transportation of the Mix

The provisions as specified in Clauses 501.3, 501.4 and 504.4.7 shall apply.

507.4.7 Spreading

The general provisions of Clauses 501.6 and 501.7 shall apply, as modified by the approved laying trials.

507.4.8 Rolling

The general provisions of Clauses 501.6 and 501.7 shall apply, as modified by the approved laying trials.

507.5 Opening to Traffic

Provisions in Clause 504.5 shall apply.

507.6 Surface Finish and Quality Control

The surface finish of the completed construction shall conform to the requirements of

Clause 902. All materials and workmanship shall comply with the provisions set out in Section 900 of these Specifications.

507.7 Arrangements for Traffic

During the period of construction, arrangements for traffic shall be made in accordance with the provisions of Clause 112.

507.8 Measurement for Payment

The measurement shall be as specified in **Clause 505.8**.

507.9 Rate

The contract unit rate shall be all as specified in Clause 504.9, except that the rate shall include the provision of bitumen at 5.2 percent & 5.4 percent for grading 1 and grading 2 by weight of total mix respectively. The variation in actual percentage of bitumen used will be assessed and the payment adjusted plus and minus accordingly.

508 CLOSE-GRADED PREMIX SURFACING/MIXED SEAL SURFACING

508.1 Scope

508.1.1 The work shall consist of the preparation, laying and compaction of a close-graded premix surfacing material of 20 mm thickness composed of graded aggregates premixed with a bituminous binder on a previously prepared surface, in accordance with the requirements of these Specifications, to serve as a wearing course.

508.1.2 Close graded premix surfacing shall be of Type A or Type B as specified in the Contract documents. Type A grading is recommended for use in areas having rainfall more than 150 cm per year. In other areas Type B grading may be used.

508.2 Materials

508.2.1 Binder

The provisions of Clause 510.1.2.1 shall apply.

508.2.2 Coarse Aggregates

The provisions of Clause 511.1.2.2 shall apply.

508.2.3 Fine Aggregates

The fine aggregates shall consist of crushed rock, or natural sand or a mixture of both. These shall be clean, hard, durable, un-coated, mineral particles, dry; and free from injurious, soft or flaky particles and organic or deleterious substances.

508.2.4 Aggregate Gradation

The coarse and fine aggregates shall be so graded or combined as to conform to one or the other gradings given in Table 500-19, as specified in the contract.

Table 500-19 : Aggregate Gradation

IS Sieve Designation (mm)	Cumulative Percent by Weight of Total Aggregate Passing	
	Type A	Type B
13.2 mm	–	100
11.2 mm	100	88 – 100
5.6 mm	52 – 88	31 – 52
2.8 mm	14 – 38	5 – 25
0.090 mm	0 – 5	0 -5

508.2.5 Proportioning of Materials

The total quantity of aggregates used for Type A or B close-graded premix surfacing shall be 0.27 cubic metre per square metre area. The quantity of binder used for premixing shall be 22.0 kg and 19.0 kg per 10 square metre area for Type A and Type B surfacing respectively.

508.3 Construction Operations

The provisions of Clause 510.1.3.1 through Clause 510.1.3.5 shall apply.

508.4 Opening to Traffic

Traffic may be allowed after completion of the final rolling when the mix has cooled down to the surrounding temperature. Speed restrictions may be imposed at initial stages.

508.5 Surface Finish and Quality Control of Work

The surface finish of construction shall conform to the requirements of Clause 902. For control on the quality of materials and the works carried out, the relevant provisions of Section 900 shall apply.

508.6 Arrangements for Traffic

During the period of construction, arrangements for traffic shall be in accordance with the provisions of Clause 112.

508.7 Measurement for Payment

Close-graded premix surfacing, Type A or B shall be measured as finished work, for the area specified to be covered, in square metres at a specified thickness. The area will be the net area covered.

508.8 Rate

The contract unit rate for close-graded premix surfacing, Type A or B shall be payment in full for carrying out the required operations including full compensation for all components listed in Clause 501.8.8.2.

509 SURFACE DRESSING

509.1 Scope

This work shall consist of the application of one coat or two coats of surface dressing, each coat consisting of a layer of bituminous binder sprayed on a previously prepared, base, followed by a cover of stone chips rolled in to form a wearing course to the requirements of these Specifications.

509.2 Materials

509.2.1 Binder

The binder shall either be bitumen conforming to IS:73 or rapid setting cationic bitumen emulsion (RS-2) conforming to IS:8887. Grade of bitumen shall depend upon the climatic condition. For selection of grade of bitumen guidance may be taken from Table 500-1. The type of binder to be used shall be stated in the Contract, or as directed by the Engineer.

509.2.2 Aggregates

The stone chips (cover aggregate) shall conform to the requirements of Clause 505.2.2., except that their water absorption shall be restricted to a maximum of 1 percent and they shall have a Polished Stone Value of minimum 60. [in BS:812 (Part-114)], of not less than 60. The size of the aggregate shall depend upon the type of surface on which it is laid and the traffic intensity. The chips shall be single sized, clean, hard, durable, of cubical shape; and free from dust and soft or friable matter, organic or other deleterious matter and conform to one of the gradings given in Table 500-21. The size of the aggregate shall depend upon the type of surface on which it is laid and the traffic intensity. Table 500-20 may be used as guidance.

Pre-coated Chips : As an alternative to the use of an adhesion agent or wherever specified in the Contract, the chips may be pre-coated before they are spread except when the sprayed binder film is a bitumen emulsion. Pre-coating the chips may be carried out by mixing aggregates with 0.75 to 1.0 percent of bitumen by weight of chips in a suitable mixer. The chips shall be heated to 160°C and mixed with the binder heated to its application temperature. The pre-coated chips shall be allowed to cure for at least one week or until they become non sticky and can be spread easily.

Table 500-20 : Recommended Nominal Size of Aggregates (mm)

Type of Surface	Traffic Intensity in Terms of Number of Vehicles Per Day in the Lane Under Consideration		
	1000-2000	200-1000	20-200
Very hard	10	6	6
Hard	13	10	6
Normal	13	10	6
Soft	19	13	13
Very soft		19	13

Table 500-21 : Grading requirements for Aggregates used for Surface Dressing

IS Sieve Designation (mm)	Cumulative Percent by Weight of Total Aggregates Passing for the Following Nominal Sizes (mm)			
	19	13	10	6
26.5	100			
19	85-100	100		
13	0-40	85-100	100	
9.5	0-7	0-40	85-100	100
6.3		0-7	0-35	85-100
4.75			0-10	
3.35				0-35
2.36	0-2	0-2	0-2	0-10
0.60				0-2
0.075	0-1.5	0-1.5	0-1.5	0-1.5
Minimum 65% by weight of aggregate	Passing 19 and retained on 13.2	Passing 13.2 and retained on 9.5	Passing 9.5 and retained on 6.3	Passing 6.3 and retained on 3.35

509.2.3 Rates of Spread of Binder and Chips

The rate of spread of binder and chips will depend upon the nominal size of the aggregate and the extent of its embedment into the surface. The rate shall be determined as per the procedure given in Manual for Construction and Supervision of Bituminous Construction. Approximate rate of application of aggregates, and binder under average conditions are given in Table 500-22.

Table 500–22 : Approximate Rate of Application of Binder and Aggregates

Nominal Aggregate Size mm	Binder (Kg/m²)			Aggregates Cu.m/m²
	Uncoated Aggregates		Coated Aggregates	
	Bitumen	Emulsion	Bitumen	
19	1.2	1.8	1.0	0.014-0.015
13	1.0	1.5	0.8	0.009-0.011
10	0.9	1.3	0.7	0.007-0.009
6	0.75	1.1	0.6	0.003-0.005

Note : Bitumen for coated aggregates excludes quantity of bitumen required for coating.

509.2.4 Anti-Stripping Agent

Where the proposed aggregate fails to pass the stripping test then an approved anti-stripping agent (Appendix 4 for details) may be added to the binder in accordance with the manufacturer's instructions. The effectiveness of the proposed anti-stripping agent must be demonstrated by the Contractor, before approval by the Engineer.

509.3 Construction Operations

509.3.1 Weather and Seasonal Limitations

Clause 501.5.1 shall apply.

509.3.2 Preparation of Base

The base on which the surface dressing is to be laid shall be prepared, shaped and conditioned to the specified lines, grade and cross section in accordance with Clause 501 or as directed by the Engineer. Prime coat, where needed, shall be provided as per Clause 502 or as directed by the Engineer. Where the existing surface shows signs of fatting up, the excess bitumen shall be removed as directed by the Engineer. The bituminous surface to be dressed shall be thoroughly cleaned either by using a mechanical broom and/or compressed air, or any other approved equipment/method as specified in the Contract or directed by the Engineer. The

prepared surface shall be dust free, clean and dry, (except in the case of cationic emulsion where the surface shall be slightly damp).

509.3.3 Application of Binder

After preparation of base, paving grade binder heated to an appropriate temperature or bitumen emulsion shall be sprayed uniformly using mechanical sprayers. During the operation the ratio between truck speed and pump revolution shall be maintained constant with the help of automatic control. When work resumes, the binder shall not be sprayed on the earlier completed surface. This can be done by covering the completed work with bitumen impregnated paper. Excessive deposit of bituminous material shall be immediately removed. The equipment described in IRC:SP:34 with synchronized spraying and compaction shall be preferred for better control and uniformity in construction.

The spraying temperatures for binder are given below:

Binder Grade	Whirling Spray Jets		Slot Jets	
	Min°C	Max°C	Min°C	Max°C
VG 10	180	200	165	175

509.3.4 Application of Stone Chips

Immediately after application of the binder, clean, dry chips (in the case of emulsion the chippings may be slightly damp) shall be spread uniformly by means of a mechanical chip spreader on the surface so as to cover the surface completely with a single layer of chips.

509.3.5 Rolling

Rolling of the chips should preferably be carried out by a pneumatic tyre roller in accordance with Clauses 501.6 and 501.7. Rolling shall commence at the edges and progress towards the centre except in super-elevated and uni-directional cambered portions where it shall proceed from the lower edge to the higher edge. Each pass of the roller shall uniformly overlap not less than one-third of the track made in the preceding pass. While rolling is in progress, additional chips shall be spread by hand in necessary quantities required to make up irregularities. Rolling shall continue until all aggregate particles are firmly embedded in the binder and present a uniform closed surface.

509.3.6 Application of Second Coat of Surface Dressing

Where surface dressing in two coats is specified, the second coat should not be applied until the first coat has been open to traffic for two weeks. The surface on which the second coat is

laid must be clean and free of dust. The construction operations for the second coat shall be the same as described in Clauses 510.3.3 to 510.3.5.

509.4 Opening to Traffic

Traffic shall not be permitted to run on any newly surface dressed area until the following day. In special circumstances, however, the Engineer may allow the road to be opened to traffic immediately after rolling, but in such cases traffic speed shall be limited to 20 km per hour until the following day.

509.5 Surface Finish and Quality Control of Work

The surface finish of construction shall conform to the requirements of Clause 902.

For control on the quality of materials and the works carried out, the relevant provisions of Section 900 shall apply.

509.6 Arrangements for Traffic

During the period of construction, arrangements for traffic shall be made in accordance with the provisions of Clause 112.

509.7 Measurement for Payment

Each coat of surface dressing shall be measured as finished work for the area instructed to be covered, in square metres.

509.8 Rate

The Contract unit rate for surface dressing, based on the approximate rates of application for binder given in Table 500-22 and each size of chippings given in Clause 509.2.3, shall be adjusted, plus or minus, for the difference between the approximate rate of spread and the rate of spread determined based on design and approved by the Engineer. The adjusted rate shall be payment in full for carrying out the required operations including full compensation for all components listed in Clause 501.8.8.2.

510 OPEN-GRADED PREMIX SURFACING

510.1 Open-Graded Premix Surfacing using Viscosity Grade Paving Bitumen

510.1.1 Scope

This work shall consist of preparation, laying and compaction of an open-graded premix surfacing material of 20 mm thickness composed of small-sized aggregate premixed with

bituminous binder on a previously prepared base, in accordance with the requirements of these Specifications to serve as a wearing course.

510.1.2 Materials

510.1.2.1 Binder

The binder shall be viscosity grade bitumen of a suitable grade as specified in the Contract, or as directed by the Engineer, and satisfying the requirements of IS:73. For selection of grade of bitumen guidance may be taken from Table 500-1.

510.1.2.2 Aggregates

The aggregates shall conform to Clause 504.2.2 except that the water absorption shall be limited to a maximum of 1 percent. The Polished Stone Value, shall not be less than 55, when tested as per BS:812-114.

510.1.2.3 Proportioning of Material

The materials shall be proportioned in accordance with Table 500-23.

Table 500-23 : Quantities of Materials Required for 10 m² of Road Surface for 20 mm Thick Open-graded Premix Surfacing

	Materials	Quantity
Aggregates		
a)	Nominal Stone size 13.2 mm (passing 22.4 mm sieve and retained on 11.2 mm sieve)	0.18 m^3
b)	Nominal Stone size 11.2 mm (passing 13.2 mm sieve and retained on 5.6 mm sieve)	0.09 m^3
	Total	**0.27 m^3**
Binder		
a)	For 0.18 m^3 of 13.2 mm nominal size stone of 52 kg bitumen per m^3	9.5 kg
b)	For 0.09 m^3 of 11.2 mm nominal size stone of 56 kg bitumen per m^3	5.1 kg
	Total	**14.6 kg**

510.1.3 Construction Operations

510.1.3.1 Weather and Seasonal Limitations

Clause 501.5.1 shall apply.

510.1.3.2 Preparation of Surface

The underlying surface on which the bituminous surfacing is to be laid shall be prepared, shaped and conditioned to the specified lines, grade and cross-section in accordance with Clause 501. A prime coat where needed shall be applied in accordance with Clause 502 as directed by the Engineer.

510.1.3.3 Tack Coat

A tack coat complying with Clause 503, shall be applied over the base preparatory to laying of the surfacing.

510.1.3.4 Preparation of Premix

Hot mix plant of appropriate capacity and type shall be used for the preparation of the mix material. The hot mix plant shall have separate dryer arrangement for heating aggregate.

The temperature of the binder and aggregate at the time of mixing, laying and compaction shall be in conformity with the temperature given in Table 500-3. The difference in temperature between the binder and aggregate shall at no time exceed 14°C. Mixing shall be thorough to ensure that a homogeneous mix is obtained in which all particles of the aggregates are coated uniformly.

The mix shall be immediately transported from the mixer to the point of use in suitable vehicles or hand barrows. The vehicles employed for transport shall be clean and the mix being transported covered in transit if so directed by the Engineer.

510.1.3.5 Spreading and Rolling

The pre mixed material shall be spread on a previously prepared base to Clause 501 by a paver unless specified otherwise in the Contract to the desired thickness, grades and crossfall (camber). The cross-fall should be checked by means of camber boards and irregularities levelled out. Excessive use of blades or rakes should be avoided. As soon as sufficient length of bituminous material has been laid, rolling shall commence with 8–10 tonne rollers, smooth wheel tandem type or other approved equipment. Rolling shall begin at the edge and progress towards the centre longitudinally, except that on superelevated and uni-directional cambered portions, it shall progress from the lower to upper edge parallel to the centre line of the pavement.

When the roller has passed over the whole area once, any high spots or depressions, which become apparent, shall be corrected by removing or adding premixed materials. Rolling shall then be continued until the entire surface has been rolled and all the roller marks eliminated. In each pass of the roller the preceding track shall be overlapped uniformly by at least one-third width. The roller wheels shall be kept damp to prevent the premix from adhering to the wheels. In no case shall fuel/lubricating oil be used for this purpose. Excess use of water for this purpose shall also be avoided.

Rollers shall not stand on newly laid material. Rolling operations shall be completed in every respect before the temperature of the mix falls below the rolling temperature indicated in Table 500-3.

510.1.3.6 Seal Coat

A seal coat conforming to Clause 511 of the type specified in the Contract shall be applied to the surface immediately after laying the surfacing.

510.1.4 Opening to Traffic

No traffic shall be allowed on the road until the seal coat has been laid. After the seal coat is laid, the road may be opened to traffic according to Clause 511.4.

510.1.5 Surface Finish and Quality Control of Work

The surface finish of construction shall conform to the requirements of Clause 902. For control of the quality of materials and the works carried out, the relevant provisions of Section 900 shall apply.

510.1.6 Arrangements for Traffic

During the period of construction, arrangements for traffic shall be made in accordance with the provisions of Clause 112.

510.1.7 Measurement for Payment

Open graded premix surfacing shall be measured as finished work, for the area instructed to be covered, in square metres.

510.1.8 Rate

The contract unit rate for open-graded premix surfacing shall be payment in full for carrying out the required operations including full compensation for all components listed in Clause 501.8.8.2.

510.2 Open Graded Premix Surfacing Using Cationic Bitumen Emulsion

510.2.1 Scope

This work shall consist of the preparation, laying and compaction of an open graded premix surfacing of 20 mm thickness composed of small-sized aggregate premixed with a cationic bitumen emulsion on a previously prepared surface, in accordance with the requirements of these Specifications to serve as a wearing course.

510.2.2 Materials

510.2.2.1 Binder

The binder for Premix wearing course shall be Cationic Bitumen emulsion of Medium Setting (MS) grade complying with IS:8887 or as specified in the Contract.

510.2.2.2 Aggregate

The requirements of Clause 511.1.2.2 shall apply.

510.2.3 Proportioning of Materials

The materials shall be proportioned as per quantities given in Tables 500-24.

Table 500-24 : Quantities of Aggregate for 10 m² Area

Aggregates		
a)	Coarse aggregate nominal 13.2 mm size, passing IS 22.4 mm sieve and retained on IS 11.2 mm sieve	0.18 m^3
b)	Coarse aggregate nominal 11.2 mm size; passing IS 13.2 mm sieve and retained on IS 5.6 mm sieve	0.09 m^3
	Binder	20 to 23 kg

510.2.4 Construction Operations

510.2.4.1 Weather and Seasonal Limitations

Clause 501.5.1 shall apply except that the minimum air temperature for laying shall be 10°C. Cationic bitumen emulsions shall not normally be stored below 0°C.

510.2.4.2 Preparation of Surface

The underlying surface on which the premix surfacing is to be laid shall be prepared, in accordance with the requirements of Clause 504.3.2 for a newly primed surface, and in accordance with Clause 505.4.2 where an existing bituminous surface is to be overlaid.

510.2.4.3 Preparation of Binder

Before opening, the cationic bitumen emulsion drums shall be rolled at a slow speed, to and fro at least 5 times, for a distance of about 10 metres, to distribute any storage sedimentation.

510.2.4.4 Tack Coat

A tack coat complying with Clause 503, shall be applied over the surface preparatory to laying of the surfacing where specified in the Contract, as directed by the Engineer.

510.2.4.5 Preparation of Premix

Premixing of cationic bitumen emulsion and aggregates can be carried out in a suitable mixer such as cold mixing plant as per IS:5435 (Revised) or concrete mixer or by pay loaders in exceptional cases where approved by the Engineer. Where specified in the Contract, continuous mixing operation shall be done either in batch or continuous hot mix plant suitable for emulsion mixes.

When using concrete mixer for preparing the premix, 0.135 cu.m (0.09 cu.m of 13.2 mm size and 0.045 cu.m of 11.2 mm size) of aggregates per batch shall be used. This quantity will be for 5 sq.m of road surface with 20 mm average thickness.

The aggregates required for one batch shall be prepared adjacent to the mixer.

The coarse aggregate of 13.2 mm size shall be placed into the mixer followed by 5 to 6.5 kg of Cationic bitumen emulsion and then the 11.2 mm size aggregate shall be added, followed by 5 to 6.5 kg of Cationic bitumen emulsion. After the materials have been mixed thoroughly, the mix shall be immediately transported to the laying site in suitable vehicles. Too much mixing shall be avoided.

510.2.4.6 Spreading and Rolling

The premixed cationic bitumen emulsion and aggregates shall be spread uniformly by a paver within 10 minutes of applying the tack coat. All levelling, raking etc. should be completed within 20 minutes of the time of mixing.

The mix shall be spread uniformly to the desired thickness, grades and crossfall (camber). The crossfall shall be checked by means of camber boards and irregularities levelled out. Too much raking is to be avoided.

The rolling shall start immediately after laying the premix. A smooth wheeled tandem roller of 8-10 tonnes shall be used, unless other compaction methods are approved by the Engineer, based on the results of laying trials, if necessary. While rolling, wheels of roller should be clean and kept moist to prevent the premix from adhering to the wheels. In no case shall fuel/ lubricating oil be used for this purpose. Use of water for this purpose shall be strictly limited to an absolute minimum.

Rolling shall commence at the edges and progress towards the centre longitudinally except in the case of superelevated and uni-directionaly cambered sections where rolling shall be carried out from the lower edge towards the higher edge parallel to the centre line of the road.

After one pass of roller over the whole area, depressions or uncovered spots should be corrected by adding premix material. Rolling shall be continued until the entire surface has been rolled, to maximum compaction and all the roller marks eliminated. In each pass of the roller, the preceding track shall be overlapped uniformly by at least one-third width. Roller(s) shall not stand on newly laid material. Joints, both longitudinal and transverse to the road sections laid and compacted earlier, shall be cut vertically to their full depth so as to expose fresh surface which shall be painted with a thin coat of binder before the new mix is laid.

510.2.5 Seal Coat

A seal coat, conforming to Clause 511, as specified in the Contract, shall be applied immediately after laying the premix carpet.

510.2.6 Opening to Traffic

Traffic should not be allowed over the premix surface till seal coat is laid. After the seal coat is laid, traffic may be allowed in accordance with Clause 511.4.

510.2.7 Surface Finish and Quality Control

The surface finish of construction shall conform to the requirements of Clause 902. For control of the quality of materials and work carried out, relevant provision of Section 900 shall apply.

510.2.8 Arrangements for Traffic

During the period of construction, arrangements for traffic shall be made in accordance with the provisions of Clause 112.

510.2.9 Measurement for Payment

Open graded premix surfacing shall be measured as finished work, for the area instructed to be covered, in square metres. All allowances for wastage in cutting of joints shall be deemed to be included in the rate.

510.2.10 Rate

The contract unit rate for premix carpet shall be payment in full for carrying out the required operations including full compensation for all components listed in Clause 501.8.8.2.

511 SEAL COAT

511.1 Scope

This work shall consist of the application of a seal coat for sealing the voids in a bituminous surface laid to the specified levels, grade and cross fall (camber).

Seal coat shall be of either of the two types specified below:

A) Liquid seal coat comprising of an application of a layer of bituminous binder followed by a cover of stone chips.

B) Premixed seal coat comprising of a thin application of fine aggregate premixed with bituminous binder.

511.2 Materials

511.2.1 Binder

The requirements of Clauses 510.1.2.1 and 510.2.2.1 shall apply.

The quantity of bitumen per 10 square metres, shall be 9.8 kg for Type A, and 6.8 kg for Type B seal coat. Where bituminous emulsion is used as a binder, the quantities for Type A and Type B seal coats shall be 15 kg and 10.5 kg respectively.

511.2.2 Stone Chips for Type A Seal Coat

The stone chips shall consist of angular fragments of clean, hard, tough and durable rock of uniform quality throughout. They shall be free of soft or disintegrated stone, organic or other deleterious matter. Stone chips shall be of 6.7 mm size defined as 100 percent passing through 11.2 mm sieve and retained on 2.36 mm sieve. The quantity used for spreading shall be 0.09 cubic metre per 10 square metre area. The chips shall satisfy the quality requirements

given in Table 500-8 except that the upper limit for water absorption value shall be 1 percent.

511.2.3 Aggregate for Type B Seal Coat

The aggregate shall be sand or grit and shall consist of clean, hard, durable, uncoated dry particles, and shall be free from dust, soft or flaky/elongated material, organic matter or other deleterious substances. The aggregate shall pass 2.36 mm sieve and be retained on 180 micron sieve. The quantity used for premixing shall be 0.06 cum per 10 sqm area.

511.3 Construction Operations

511.3.1 Weather and Seasonal Limitations

The requirements of Clause 501.5.1 shall apply.

511.3.2 Preparation of Surface

The seal coat shall be applied immediately after laying the bituminous course which is required to be sealed. Before application of seal coat materials, the surface shall be cleaned free of any dust or other extraneous matter.

511.3.3 Construction of Type A Seal Coat

The construction operations shall be the same as described in Clause 509.3.3 to 509.3.5.

511.3.4 Construction Type B Seal Coat

511.3.4.1 Using Paving Bitumen

The construction operations shall be the same as in Clause 510.1.3.

511.3.4.2 Using Emulsion

The construction operations shall be the same as in Clause 510.2.4.

511.4 Opening to Traffic

In the case of Type B seal coat, traffic may be allowed soon after final rolling when the premixed material has cooled down to the surrounding temperature. In the case of Type A seal coat, traffic shall not be permitted to run on any newly sealed area until the following day.

In special circumstances, however, the Engineer may open the road to traffic immediately after rolling, but in such cases traffic shall be rigorously limited to 20 km per hour until the following day.

511.5 Surface Finish and Quality Control Work

The surface of construction shall conform to the requirements of Clause 902.

For control on the quality of materials and the works carried out, the relevant provisions of **Section 900** shall apply.

511.6 Arrangements for Traffic

During the period of construction, arrangements for traffic shall be made in accordance with the provisions of Clause 112.

511.7 Measurement for Payment

Seal coat, Type A or B shall be measured as finished work, over the area specified to be covered, in square metres at the thickness specified in the Contract.

511.8 Rate

The contract unit rate for seal coat Type A or B shall be payment in full for carrying out the required operations including full compensation for all components listed in Clause 501.8.8.2.

512 SLURY SEAL

512.1 Scope

The work consists of design and laying a mixture of mineral aggregate, slow setting cationic bitumen emulsion, water and additives, if needed, proportioned, mixed and uniformly spread over a previously prepared surface. The finally laid slurry seal shall have a homogenous mat, adhere firmly to the prepared surface and provide friction resistant surface texture throughout its surface life.

512.2 Type of Slurry Seals and Applications

Different types of slurry seal and their applications are given in Table 500-25. The type and application of the slurry seal shall be specified in the Contract.

Table 500-25 : Different Types of Slurry Seals

Items	Type I (2 – 3 mm)	Type II (4 – 6 mm)	Type III (6-8 mm)**
Application	Filling of hair cracks	Filling of surface cracks 1- 3 mm and preventive/ renewal treatment (upto 450 CVPD)***	Filling of surface cracks 3-6 mm and preventive/renewal treatment (upto 1500 CVPD)***
Quantity* of slurry (kg/m^2)	4.3 to 6.5	8.4 to 9.8	10.1 to 12
Residual binder (% by weight of dry aggregate)	10 to 16	7.5 to 13.5	6.5 to 12

* In terms by weight of dry aggregate

** Indicative only

*** CVPD : Commercial Vehicles per day

512.3 Materials

The materials for slurry seal shall conform to the following requirements.

512.3.1 Bitumen Emulsion

The bitumen emulsion shall be a cationic slow setting type SS 2, conforming to the requirements of IS:8887.

512.3.2 Aggregates

The mineral aggregates shall be crushed stone dust, clean, sharp, hard, durable and uncoated dry particles and shall be free from soft pieces and organic and other deleterious substances. The aggregate shall satisfy the requirement given in Table 500-26. The target grading shall conform to one of the three types given in Table 500-27.

Table 500-26 : Properties of Aggregates

Properties	Test Method	Specification
Sand Equivalent Value	IS:2720 (Part 37)	Min 50 percent
Water absorption*	IS:2386 (Part 3)	Max 2 percent
Soundness with- Sodium sulphate Magnesium sulphate	IS:2386 (Part 5)	 Max 12 percent Max 18 percent

* In case water absorption exceeds 2% but is less than 4%, same may be permitted subject to conformity of soundness test and wet stripping test

Table 500-27 : Aggregate Grading

Sieve Size (mm)	Percentage by Mass Passing (Minimum Layer Thickness)		
	Type I (2-3 mm)	Type II (4-6 mm)	Type III (6-8 mm)
9.5	–	–	100
6.3	–	100	90–100
4.75	100	90–100	70–90
2.36	90–100	65–90	45–70
1.18	65–90	45–70	28–50
0.600	40–65	30–50	19–34
0.300	25–42	18–30	12–25
0.150	15–30	10–21	7-18
0.075	10–20	5–15	5–15

Tolerances : Percent passing each sieve shall not vary by more than the tolerance limit indicated in Table 500-28 and shall remain within the gradation band.

Table 500-28 : Tolerances for Slurry Seal

Description	Tolerance
Aggregate passing 4.75 mm	±5%
Aggregate passing 2.36 mm, 1.18 mm, 0.6 mm	±5%
Aggregate passing 0.3 mm	±4%
Aggregate passing 0.15 mm	±3%
Aggregate passing 0.075 mm	±2%

If more than one nominal size aggregate is used to produce the required grading, the correct amount of each type of aggregate used shall be proportioned separately to meet the requirements of grading as per Table 500-27, prior to adding other materials in the mixture. After target gradation has been submitted, the percent passing each sieve shall not vary by more than the tolerance limits given in Table 500-29, and shall remain within the gradation band. The aggregate will be acceptable based on average of five gradation tests at the job location.

512.3.3 Filler

Mineral filler shall be Ordinary Portland Cement. The quantity of filler shall be in the range of 0.5 to 2 percent by weight of dry aggregate.

512.3.4 Water

Water shall be potable, free from harmful salt and contaminants. The pH of the water shall be in the range of 6 to 7.

512.3.5 Additives

Chemical additives may be used to accelerate or retard the break-set time of the slurry or to improve the resulting surface finish. The quantity of additive, if used, shall be decided by mix design and to be adjusted as per the site/climate conditions. The specifications for additive shall be supplied by the supplier of the emulsion. The additive and emulsion shall be compatible with each other.

512.4 Mix Design

The compatibility of aggregate, emulsion, filler and additive(if needed) shall be verified by mix design for a selected type and grading of aggregate as specified in Tables 500-27 and 500-28. the design criteria for slurry seal mixture is specified in Table 500-29. The proposed slurry seal mix shall conform to the specified requirements, when tested in accordance with tests specified in Table 500-30. The mix design report shall clearly show the proportions of aggregate, filler, water and residual bitumen content based on the dry weight of the aggregates, additive usage (if any).

Table 500-29 : Mix Design Criteria for Slurry Seal Mix

Requirement	Specifications	Test Method
Mix Time, minimum	180 seconds	Appendix 1 IRC:SP:81
Consistency, maximum	3 cm	Appendix 3 IRC:SP:81
Wet cohesion, pass % minimum	20 kg.cm	Appendix 4 IRC:SP:81
Wet striping, Pass %, minimum	90	Appendix 5 IRC:SP:81
Wet Track abrasion loss, (one hour soak), maximum	800 g/m^2	Appendix 6 IRC:SP:81

Aggregate, bitumen emulsion, water and additive including set control additive (if needed), shall be proportioned by weight utilizing the mix design approved by the Engineer. The final mixture, after addition of water and additive (if used) shall be such that the slurry seal mixture has proper workability and permit traffic within four hours (without leading to ravelling after placement). Trial mix shall be prepared and laid at site for the designed mix and observed for breaking and setting time. Indicative limits of various ingredients for job mix of slurry seal shall be as given in Table 500-30.

Table 500-30 : Indicative Quantity of Ingredients

Ingredients	Limits (Percent by Weight of Dry Aggregates)
Cationic Bitumen Emulsion	10 to 16 for type I 7.5 to 13.5 for Type II 6.5 to 12 for Type III
Water	6 to 12
Filler	1.0 to 2.0
Additive	0.5 to 2.0

512.5 Construction

512.5.1 Weather and Seasonal Limitations

Laying of slurry seal shall not be undertaken, if either the pavement temperature or air temperature is below 10°C. However during a dry spell , slurry seal may be laid in rainy season also, even if the surface is wet but there is no stagnant water on the pavement surface.

512.5.2 Surface Preparation

The underlying surface on which the slurry seal is to be applied shall be cleaned of all loose material, mud spots, vegetation and extraneous matter and shall be prepared and shaped to the needed profile. It is essential to pre-treat cracks on the pavement surface with an appropriate crack sealing material prior to application of slurry seal, if it is used for preventive/ renewal treatment. The surface should be swept clean by removing caked earth and other foreign matter with wire brushes, sweeping with mechanical brooms and finally dusting with air jet or other means approved by the Engineer

512.5.3 Application of Tack Coat

Tack coat is not required normally for flexible pavements, unless surface is extremely hungry and dry. In case it is needed, Clause 503 shall apply.

512.5.4 Machine

The machine shall be specially designed and manufactured to lay slurry seal. It shall be self propelled equipment, truck mounted, consisting of following sub-assemblies used to manufacture and simultaneously spread these mixes on the surface:

i) Aggregate bin.

ii) Filler bin.

iii) Water and Emulsion Tanks.

iv) Additive Tanks.

v) Aggregates and filler conveyors to supply the mixer box.

vi) Pump or compressed air system to supply the emulsion/water.

vii) Mixer Box.

viii) Spreader box to place the mixed slurry on the job.

512.5.5 Calibration of Machine

Slurry seal laying machine shall be calibrated for flow of all the constituents as per the job mix in presence of Engineer. No machine shall be allowed to work on the project until the calibration has been completed and accepted by the engineer. 2 kg samples of slurry seal mix will be taken and verified for proportioning and mix consistency. The verification for application rate shall also be carried out in presence of the Engineer. The procedure for calibration and verification is as given in Appendix 7 of IRC:SP:81.

512.5.6 Application of Slurry Seal

A calibrated slurry seal machine, as per requirements of job mix, shall be used to spread the material. The surface shall be pre-wetted by fogging ahead of the spreader box (if required under hot weather conditions). The rate of application shall be adjusted during the day to suit temperature, surface texture and humidity. The mixture shall be agitated and mixed uniformly in the spreader box by means of twin shafted paddles or spiral augurs fixed in spreader box. A front seal shall be provided to ensure no loss of the mixture at the road contact point. The rear seal shall act as final strike off and shall be adjustable. The spreader box and real strike off shall be so designed and operated that a uniform consistency is achieved to produce free flow of material to the rear strike off. A secondary strike off shall have the same adjustment as the spreader box. The spreader box shall have the suitable means provided to side shift the box to compensate for variation in pavement geometry. Sufficient amount of material shall be carried in all parts of spreader box at all times so that a complete coverage is obtained. Overloading of the spreader box shall be avoided. No lumping, balling and unmixed aggregates shall be permitted. No streak, caused by oversized aggregates shall be left on the finished surface. Longitudinal joints shall correspond with the edges of existing traffic lanes. Other patterns of longitudinal joints may be permitted, if pattern will not adversely affect the quality of finished surface. In case streak is formed, it shall be corrected immediately by fresh material and with use of squeeze. Longitudinal joints, common to two traffic lanes shall be butt joints with overlap not exceeding an average of 60-100 mm. The mixture shall be uniform and homogeneous after spreading on existing surfaces and shall not show separation of the emulsion and aggregates after setting.

512.5.7 Rate of Application

The rate of application shall be as per Table 500-26 (by weight of dry aggregates).

512.5.8 Rolling

Generally rolling is not required. Where rolling is felt necessary due to inadequate cohesion, a pneumatic tyred roller having individual wheel load between 0.75 to 1.5 tonne shall be used. Rolling shall commence as soon as the slurry has set.

512.6 Surface Finish and Quality Control

The surface finish of construction shall conform to the requirements of Clause 902. For control of the quality of materials and work carried out, relevant provision of Section 900 shall apply.

512.6.1 Opening to Traffic

Surface shall be opened to traffic after slurry is in a completely set condition. The maximum setting time shall be 4 hours. Speed of traffic shall be restricted to 20 km per hour for next 12 hours.

512.7 Arrangements for Traffic

During the period of construction, arrangements for traffic shall be made in accordance with the provisions of Clause 112.

512.8 Measurement for Payment

Slurry seal shall be measured as finished work as specified, in square metres.

512.9 Rate

The contract unit rate for slurry seal shall be payment in full for carrying out the required operations including full compensation for the specified rate of application of the mix and the quantity of residual binder. The variation in rates of actual application shall be suitably adjusted plus or minus as provided in the Contract. The contract unit rate shall cover all operations listed in Clause 501.8.8.2.

513 FOG SPRAY

513.1 Scope

The work covers a very light application of low viscosity bitumen emulsion for purposes of sealing cracks less than 3 mm wide or incipient fretting or disintegration in an existing

bituminous surfacing, and to help reduce loosening of chips by traffic on newly finished surface dressing.

513.2 Material

The bitumen emulsion shall be as specified in the Contract or as instructed by the Engineer. The emulsion shall be SS-1 complying with the requirements of IS:8887.

513.3 Weather and Seasonal Limitations

Spraying shall not take place when the temperature is below 10°C, nor in windy or dusty conditions, nor when it is raining or the surface to be sprayed is wet (a damp surface is acceptable but refer to Clause 513.4.2.).

513.4 Construction Operations

513.4.1 Equipment

The fog spray shall be applied by means of a self-propelled or towed bitumen pressure sprayer complying with the requirements of the Manual for Construction and Supervision of Bituminous Works. The spray bar should be protected from gusts of wind by means of a hood.

513.4.2 Preparation of Surface

The surface on which the fog spray is to be applied shall be thoroughly cleaned with compressed air, scrubbers etc. The cracks shall be cleaned with a pressure air jet to remove all dirt, dust etc.

513.4.3 Application

The fog seal shall be applied at a rate of 0.5-1.0 litres/m², using equipment such as pressure tank, flexible hose and spray bar or lance.

513.5 Blinding

If specified in the Contract or ordered by the Engineer, the fog spray shall be blinded with graded grit of 3 mm size and under, coated with about 2 percent of the emulsion by weight. The pre coated grit shall be allowed to be cured for at least one week or until they become non-sticky and can be spread easily.

513.6 Quality Control of Work

For control of quality of materials and the works carried out, the relevant provisions of Section 900 shall apply.

513.7 Arrangements for Traffic

During the spraying operations, arrangements for traffic shall be made in accordance with the provisions of Clause 112. The surface should not be opened to traffic for 24 hours after spraying. If pick-up does occur a light blinding of crusher dust or sand should be applied.

513.8 Measurement of Payment

Fog spray and blinding (if used) shall be measured in terms of surface area of application, for the area covered, in square metres.

513.9 Rate

The contract unit rate for fog spray and blinding (if used) shall be payment in full for carrying out the required operations including full compensation for all components listed in Clause 501.8.8.2. (i) to (xi) as applicable to the work specified in these Specifications.

514 MICRO-SURFACING

514.1 Scope

The work shall consist of design, testing and construction of micro-surfacing composed of modified bitumen emulsion, mineral aggregate, water and necessary additives (if needed), proportioned, mixed and uniformly spread over a properly prepared surface for surface treatment of pavements in accordance with these Specifications.

514.2 Type of Mirco-Surfacing

Micro-surfacing is applied on an existing pavement surface which is structurally sound but the surface shows signs of premature ageing, aggregate loss, cracking, high degree of polishing etc, It may be used as surface sealing treatment to improve skid resistance, surface durability, to seal fine and medium cracks and for preventive maintenance and periodic renewal treatment on low and medium traffic roads. Types of micro-surfacing and rates of application are given in Table 500-31.

Table 500-31 : Types of Micro-Surfacing and Rate of Application

Items	Type II (4 to 6 mm)**	Type III (6 to 8 mm)**
Application	**Preventive and Renewal Treatment for Roads Carrying <1500 CVPD**	**Preventive and Renewal Treatment for Roads Carrying1500 to 4500 CVPD**
Quantity of mix* (kg/m^2)	8.4 to 10.8	11.1 to 16.3
Residual binder (percentage by weight of dry aggregate)	6.5 to 10.5	5.5 to 10.5

* By weight of dry aggregate. ** Indicative only.

514.3 Materials

514.3.1 Binder

The bitumen emulsion shall be a modified bitumen emulsion conforming to requirements specified in Table 500-32. The modifier shall be polymer/rubber, preferably synthetic or natural rubber latex.

Table 500-32 : Requirement of Modified Bitumen Emulsion for Micro-Surfacing

Requirements	Specifications	Method of test
Residue on 600 micron IS sieve (percent by mass), maximum	0.05	IS: 8887
Viscosity by Say bolt Furol Viscometre, at 25°C, in second	20-100	IS :8887
Coagulation of emulsion at low temperature	Nil	IS :8887
Storage stability after 24 h (168 h), % maximum	2(4)	IS :8887
Particle charge, + ve/-ve	+ ve	IS :8887
Tests on residue:		
a) Residue by evaporation, % minimum	60	IS :8887
b) Penetration at 25ºC/100 g/5 s	40-100	IS :1203
c) Ductility at 27°C, cm, minimum	50	IS :1208
d) Softening point, in °C, minimum	57	IS :1205
e) Elastic recovery*, %, minimum	50	IS :15462
f) Solubility in tri-chloroethylene, % minimum	97	IS :1216

* In case, elastic recovery is tested for Torsional Elasticity Recovery as per Appendix-8 of IRC:81, the minimum value shall be 20 percent.

514.3.2 Aggregates

As per Clause 512.3.2 (Type II and Type III Grading, Table 500-27).

514.3.3 Filler

As per Clause 512.3.3.

514.3.4 Water

As per Clause 512.3.4.

514.3.5 Additives

As per Clause 512.3.5.

514.4 Design and Proportioning of Micro-Surfacing Mix

514.4.1 The design criteria for micro-surfacing mixture is specified in Table 500-33. The mix design report shall clearly show the proportions of aggregate, filler, water and residual bitumen content based on the dry weight of aggregates and additives used (if any). The set time shall be determined by the method given in Appendix-2 of IRC:SP:81.

Table 500-33 : Mix Design Criteria for Micro-Surfacing Mix

Requirements	Specifications	Method of Test as given in IRC:SP:81
Mix time, minimum	120 s	Appendix-1
Consistency, maximum	3 cm	Appendix-3
Wet Cohesion, within 30 min, minimum.	12 kg cm	Appendix-4
Wet Cohesion, within 60 min, minimum	20 kg cm	Appendix-4
Wet stripping, pass %, minimum	90	Appendix-5
Wet track abrasion loss (one hour soak), maximum	538 g/m^2	Appendix-6

514.4.2 Aggregate, modified bitumen emulsion, water and additive (if used), shall be proportioned by weight of aggregate utilizing the mix design approved by the Engineer. If more than one type of aggregates is used, the correct amount of each type of aggregate used to produce the required grading shall be proportioned separately prior to adding other materials of the mixture, in a manner that will result in a uniform and homogenous blend. Final completed mixture, after addition of water and any additive, if used shall be such that the micro-surfacing mixture has proper workability and permit traffic within a short period depending upon the weather conditions without occurrence of ravelling and bleeding. Trial mixes shall be prepared and laid for the designed mix and observed for breaking time and setting time. The wet track abrasion test is used to determine the minimum residual bitumen content. Indicative limits of various ingredients for job mix of micro-surfacing shall be as given in Table 500-34.

Table 500-34 : Indicative ingredients in mix

Ingredients	Limits (Percent Weight of Aggregate)
Residual bitumen	6.5 to 10.5 for type II and 5.5 to 10.5 for Type III
Mineral filler	0.5 to 3.0
Additive	As needed
Water	As needed

514.5 Construction

As per Clause 512.5.

514.5.1 Weather and Seasonal Limitations

As per Clause 512.5.1.

514.5.2 Surface Preparation

As per Clause 512.5.2.

514.5.3 Application of Tack Coat

As per Clause 512.5.3.

514.5.4 Machine

As per Clause 512.5.4.

514.5.5 Calibration of Machine

As per Clause 512.5.5.

514.5.6 Application of Micro-Surfacing

A calibrated micro-surfacing machine as per requirements of job mix shall be used to spread the material. The surface shall be pre-wetted (if required under extreme hot weather conditions) by spraying water ahead of the spreader box. The rate of application of spray shall be adjusted during the day to suit temperature, surface texture and humidity. The application of micro-surfacing shall be as per Clause 512.5.6.

514.5.7 Rate of Application

The micro-surfacing mixture shall be of proper consistency at all times so as to provide the application rate required by the surface condition. The quantities of micro-surfacing mix (by weight of dry aggregate) to be used shall be as given in Table 500-31.

514.5.8 Rolling

As per Clause 512.5.8.

514.5.9 Quality Control and Surface Finish

The surface finish of construction shall conform to the requirements of Clause 902. For control of the quality of materials and work carried out, relevant provision of Section 900 shall apply.

514.6 Control of Traffic

Micro-surfacing mix requires about 2 hours to set. Traffic may be opened only after 2 hours restricting the speed to 20 km/h till 12 hours thereafter.

514.7 Arrangements for Traffic

During the period of construction, arrangements for traffic shall be made in accordance with the provisions of Clause 112.

514.8 Measurement for Payment

Micro-surfacing shall be measured as finished work as specified, in square metres.

514.9 Rate

The contract unit rate for micro-surfacing shall be payment in full for carrying out the required operations including full compensation for the specified rate of application of the mix and the quantity of residual binder. The variation in rates of actual application shall be suitably adjusted plus or minus as provided in the Contract. The contract unit rate shall include full compensation for all operations listed in Clause 501.8.8.2.

515 STONE MATRIX ASPHALT (SMA)

515.1 Scope

This work shall consist of construction in a single or multiple layer of fibre-stabilized SMA for use as wearing course/ binder course on a previously prepared bituminous bound surface. The 13 mm SMA in this Specification shall be used for wearing course with nominal layer thickness of 40 to 50 mm. The 19 mm SMA shall be used for binder (or intermediate) course with nominal layer thickness of 45 to 75 mm.

515.2 Materials

515.2.1 Bitumen

The bitumen for fibre-stabilized SMA shall be viscosity grade paving bitumen conforming to Indian Standard Specification IS:73 or Modified Bitumen complying with IS:15462 and IRC:SP:53 of appropriate type and grade capable of yielding the design mix requirements, and as per Table 500-2.

515.2.2 Coarse Aggregates

The coarse aggregates shall consist of crushed rock retained on 2.36 mm sieve. It shall be clean, hard, durable, of cubical shape and free from dust and soft organic and other deleterious substances. The aggregates shall satisfy the physical requirements given in Table 500-35.

Table 500-35 : Physical Requirements for Coarse Aggregates for Stone Matrix Asphalt

Property	Text	Method	Specification
Cleanliness	Grain Size Analysis	IS:2386 (P-1)	< 2% passing 0.075 mm sieve
Particle Shape	Combined Flakiness and Elongation Index	IS:2386 (P-1)	< 30%
Strength	Los Angeles Abrasion Value	IS:2386(P-4)	< 25%
	Aggregate Impact Value	IS:2386 (P-4)	< 18%
Polishing	Polished Stone Value	IS:2386 (P-114)	> 55%
Durability	Soundness (either Sodium or Magnesium) - 5 cycles		
	Sodium Sulphate	IS:2386 (P-5)	< 12%
	Magnesium Sulphate	IS:2386 (P-5)	
Water Absorption	Water Absorption	IS:2386 (P-3)	< 2%

* Polishing requirement does not apply when the coarse aggregate is used for intermediate (binder) course.

515.2.3 Fine Aggregates

Fine aggregates (passing 2.36 mm sieve and retained on 0.075 mm sieve) shall consist of 100 percent crushed, manufactured sand resulting from crushing operations. The fine aggregate shall be clean, hard, durable, of fairly cubical shape and free from soft pieces, organic or other deleterious substances. The Sand Equivalent Test (IS:2720, Part 37) value for the fine aggregate shall not be less than 50. The fine aggregates shall be non plastic.

515.2.4 Mineral Filler

Mineral filler shall consist of finely divided mineral matter such as stone dust and/or hydrated lime. Fly ash shall not be permitted as a filler. The filler shall be graded within the limits indicated in Table 500-36.

Table 500-36 : Grading Requirement of Mineral Filler

IS Sieve (mm)	Cumulative % Passing by Weight of Total Aggregate
0.6	100
0.3	95-100
0.075	85-100

The filler shall be inert material free from organic impurities and shall have plasticity index not greater than 4. Plasticity index requirement will not apply if filler is hydrated lime. Where the complete SMA mixture fails to satisfy the requirement of Moisture Susceptibility Test (AASHTO T 283), at least 2 percent by total weight of aggregate of hydrated lime shall be used as filler and the percentage of fine aggregate reduced accordingly.

515.2.5 Stabilizer Additive

Only pelletized cellulose fibres shall be utilized. The dosage rate for cellulose fibres is 0.3 percent minimum by weight (on loose fibre basis) of the total mix. The dosage rate shall be confirmed so that the bitumen draindown does not exceed 0.3 percent when the designed mix is tested in accordance with ASTM D 6390.

515.2.6 The cellulose fibres to be used in pellets shall meet the following requirements:

Maximum fibre length	-	8 mm
Ash content	-	maximum of 20 percent nonvolatile
Oil absorption	-	more than 4 times of the fibre weight
Moisture content	-	less than 5 percent by weight

When the Contractor submits the proposed job-mix formula for SMA for approval, it shall include the fibre manufacturer's most recently dated actual test data showing that the fibres meet the above requirements. The contractor shall protect the cellulose from moisture and contamination prior to incorporating it into the SMA.

515.3 SMA Mix Design

515.3.1 The combined grading of the coarse aggregate, fine aggregate and mineral filler (including hydrated lime if used) shall be within the limits shown in Table 500-37.

Table 500-37 : Composition of Stone Matrix Asphalt

SMA Designation	13 mm SMA	19 mm SMA
Course where used	Wearing course	Binder (intermediate) course
Nominal aggregate size	13 mm	19 mm
Layer thickness	40-50 mm	45-75 mm
IS Sieve (mm)	Cumulative % by weight of total aggregate passing	Cumulative % by weight of total aggregate passing
26.5	–	100
19	100	90-100
13.2	90-100	45-70
9.5	50-75	25-60
4.75	20-28	20-28
2.36	16-24	16-24
1.18	13-21	13-21
0.600	12-18	12-18
0.300	10-20	10-20
0.075	8-12	8-12

515.3.2 The SMA mixture will be designed using AASHTO MP8, Standard Specification for Designing Stone Matrix Asphalt and AASHTO PP 41, Standard Practice for Designing Stone Matrix Asphalt. The SMA mixture shall be compacted with 50 blows on each side using the Marshall procedure given in the Asphalt Institute MS-2 (Sixth edition). The designed mix shall meet the requirements given in Table 500-38.

Table 500-38 : SMA Mix Requirements

Mix Design Parameters	Requirement
Air void content, percent	4.0
Bitumen content, percent	5.8 min.
Celluloid fibres	0.3 percent minimum by weight of total mix
Voids in mineral aggregate (VMA), percent	17 min.
Voids in Coarse Aggregates (VCA) mix, percent	Less than VCA (dry rodded)
Asphalt drain down, percent ASTM D 6390 (Annex C of IRC:SP:79)	0.3 max.
Tensile Strength Ratio (TSR), per cent AASHTO T 283 (Annex E of IRC:SP:79)	85 min.

515.4 SMA Production

515.4.1 Mixing

The SMA mix shall be prepared in a hot mix plant of adequate capacity and capable of yielding a mix of proper and uniform quality with thoroughly coated aggregate.

When viscosity grade bitumen is used, the mix temperature shall range from 150°C to 165°C. In case of modified bitumen, the temperature of mixing and compaction shall be higher than the mix with viscosity grade bitumen. The exact temperature depends upon the type and amount of modifier used and shall be adopted as per the recommendations of the manufacturer. In order to ensure uniform quality of mix, the plant shall be calibrated from time to time.

515.4.2 Handling Mineral Filler

Adequate dry storage will be provided for the mineral filler and provisions shall be made for proportioning the filler into the mixture uniformly and in the desired quantities. This is necessary because relatively large amounts of mineral filler are required in SMA mixes.

515.4.3 Fibre Additive

For batch plant, the fibre will be added directly into the weigh hopper above the pugmill. Adequate dry mixing time is required to disperse the fiber uniformly throughout the hot aggregate. Dry mixing time will be increased by 5 to 10 seconds. Wet mixing time shall be increased by at least 5 seconds. For drum mix plant, a separate fibre feeding system shall be utilized that can accurately and uniformly introduce fibre into the drum at such a rate as not to limit the normal production of mix through the drum. At no time shall there be any evidence of fibre in the baghouse/wasted baghouse fines.

515.5 SMA Placement and Compaction

515.5.1 Preparation of Existing Bituminous Surface

The existing bituminous surface shall be cleaned of all loose extraneous matter by means of mechanical broom and high-pressure air jet from compressor or any other approved equipment/method. Any potholes and/or cracks shall be repaired and sealed.

515.5.2 Tack Coat

Clause 503 shall apply.

515.5.3 Transportation

Clause 501.4 shall apply.

515.5.4 Laying

515.5.4.1 Weather and Seasonal Limitations

Clause 501.5.1 shall apply.

515.5.4.2 Spreading

Clause 501.5.3 shall apply.

515.5.5 Compaction

Clause 501.6. shall apply, except that the use of pneumatic roller shall not be permitted if there is a possibility of pick-up.

The density of the finished paving layer shall be determined by taking 150 mm diameter cores. The density of finished paving layer shall not be less than 94 percent of the average (sample size N=2) theoretical maximum specific gravity of the loose mix (G_{mm}) obtained on that day in accordance with ASTM D2041. That is, no more than 6 percent air voids shall be allowed in the compacted SMA mat.

515.5.6 Joints

Clause 501.7 shall apply.

515.6 Quality Control and Surface Finish

The surface finish of construction shall conform to the requirements of Clause 902. For control of the quality of materials supplied and work carried out, relevant portion of Section 900 shall apply.

515.7 Control of Traffic

It shall be ensured that traffic is not allowed on the SMA surface until the paved mat has cooled to ambient temperature in its entire depth.

515.8 Arrangements for Traffic

During the period of construction, arrangements for traffic shall be made in accordance with the provisions of Clause 112.

515.9 Measurement for Payment

SMA shall be measured as finished work in sq.m at this specified thickness or in cu.m as specified in the Contract.

515.10 Rate

The contract unit rate for SMA shall be payment in full for carrying out the required operations including full compensation for all components listed in Clause 501.8.8.2.

516 MASTIC ASPHALT

516.1 Scope

This work shall consist of constructing a single layer of mastic asphalt wearing course for road pavements and bridge decks.

Mastic asphalt is an intimate homogenous mixture of selected well-graded aggregates, filler and bitumen in such proportions as to yield a plastic and void less mass, which when applied hot can be trowelled and floated to form a very dense impermeable surfacing.

516.2 Materials

516.2.1 Binder

Subject to the approval of the Engineer, the binder shall be a paving/ Industrial grade bitumen meeting the requirements given in **Table 500-39**.

Table 500-39 : Requirements for Physical Properties of Binder

Property	Test Method	Requirements
Penetration at 25°C	IS:1203	15 ± 5*
Softening point, °C	IS:1205	65 ± 10
Loss on heating for 5h at 163°C, % by mass Max.	IS:1212	2.0
Solubility in trichloroethylene, % by mass Min.	IS:1216	95
Ash (mineral matter), % by mass Max.	IS:1217	1.0

* In cold climatic regions (temperature less than 10°C), VG 40 grade bitumen may be used.

516.2.2 Coarse Aggregates

The coarse aggregates shall consist of crushed stone, crushed gravel/shingle or other stones. They shall be clean, hard, durable, of fairly cubical shape, uncoated and free from soft, organic or other deleterious substances. They shall satisfy the physical requirements given in Table 500-6.

The percentage and grading of the coarse aggregates to be incorporated in the mastic asphalt depending upon the thickness of the finished course should be as specified in Table 500-40.

Table 500-40 : Grade and Thickness of Mastic Asphalt Paving and Grading of Coarse Aggregates

Application	Thickness Range (mm)	Nominal Size of Coarse Aggregate (mm)	Coarse Aggregate Content, % by Mass of Total Mix
Roads and bridge decks	25–50	13	40±10
Heavily stressed areas i.e. Junctions and toll plazas	40–50	13	45±10
Nominal size of coarse aggregate IS Sieve (mm)		13 mm Cumulative % passing by weight	
19		100	
13.2		88–96	
2.36		0-5	

Fine Aggregates : The fine aggregates shall be the fraction passing the 2.36 mm and retained on the 0.075 mm sieve consisting of crusher run screening, natural sand or a mixture of both. These shall be clean, hard, durable, uncoated, dry, and free from soft or flaky pieces and organic or other deleterious substances.

Filler : The filler shall be limestone powder passing the 0.075 mm sieve and shall have a calcium carbonate content of not less than 80 percent by weight when determined in accordance with IS:1514.

The grading of the fine aggregate inclusive of filler shall be as given in Table 500-41.

Table 500-41 : Grading of Fine Aggregate (Inclusive of Filler)

IS Sieve	Percentage by weight of aggregate
Passing 2.36 mm but retained on 0.600 mm	0 – 25
Passing 0.600 mm but retained on 0.212 mm	10 – 30
Passing 0.212 mm but retained on 0.075 mm	10 – 30
Passing 0.075 mm	30 – 55

516.3 Mix Design

516.3.1 Hardness Number

The mastic asphalt shall have a hardness number at the time of manufacture of 50 to 70 at 25ºC prior to the addition of coarse aggregate and 10 to 20 at 25°C at the time of laying after the addition of coarse aggregate.

The hardness number shall be determined in accordance with the method specified in IS:1195-1978.

516.3.2 Binder Content

The binder content shall be so fixed as to achieve the requirements of the mix specified in Clause 516.3.1 and shall be in the range of 14 to 17 percent by weight of total mix as indicated in Table 500-42.

Table 500-42 : Composition of Mastic Asphalt Blocks without Coarse Aggregate

IS Sieve	Percentage by Weight of Mastic Asphalt	
	Minimum	Maximum
Passing 2.36 mm but retained on 0.600 mm	0	22
Passing 0.600 mm but retained on 0.212 mm	4	30
Passing 0.212 mm but retained on 0.075 mm	8	18
Passing 0.075 mm	25	45
Bitumen Content % by mass	14	17

516.3.3 Job Mix Formula

The Contractor shall submit to the Engineer for approval at least one month before the start of the work the job mix formula proposed to be used by him for the work, indicating the source and location of all materials, proportions of all materials such as binder and aggregates, single definite percentage passing each sieve for the mixed aggregate and results of the tests recommended in the various Tables and Clauses of this Specification.

516.4 Construction Operations

516.4.1 Weather and Seasonal Limitations

The provisions of Clause 501.5.1 shall apply, except that laying shall not be carried out when the air temperature at the surface on which the Mastic Asphalt is to be laid is below 10°C.

516.4.2 Preparation of the Base

The base on which mastic asphalt is to be laid shall be prepared, shaped and conditioned to the profile required, in accordance with Clause 501 or 902 as appropriate or as directed by the Engineer. In the case of a cement concrete base, the surface shall be thoroughly power brushed clean and free of dust and other deleterious matter. Under no circumstances shall mastic asphalt be spread on a base containing a binder which might soften under high application temperatures. If such material exists, the same shall be cut out and repaired before the mastic asphalt is laid.

516.4.3 Tack Coat

A tack coat in accordance with Clause 503 shall be applied on the base or as directed by the Engineer.

516.4.4 Preparation of Mastic Asphalt

Preparation of mastic asphalt consists of two stages. The first stage shall be mixing of filler and fine aggregates and then heating the mixture to a temperature of 170°C to 210°C. Required quantity of bitumen shall be heated to 170°C to 180°C and added to the heated aggregated. They shall be mixed and cooked in an approved type of mechanically agitated mastic cooker for some time till the materials are thoroughly mixed. Initially the filler alone is to be heated in the cooker for an hour and then half the quantity of binder is added. After heating and mixing for some time, the fine aggregates and the balance of binder are to be added and further cooked for about one hour. The second stage is incorporation of coarse aggregates and cooking the mixtures for a total period of 3 hours. During cooking and mixing care shall be taken to ensure that the contents in the cooker are at no time heated to a temperature exceeding 210°C.

Where the material is not required for immediate use it shall be cast into blocks consisting of filler, fine aggregates and binder, but without the addition of coarse aggregate, weighing about 25 kg each. Before use, these blocks shall be reheated to a temperature of not less than 175°C and not more than 210°C, thoroughly incorporated with the requisite quantity of coarse aggregates and mixed continuously. Mixing shall be continued until laying operations are completed so as to maintain the coarse aggregates in suspension. At no stage during the process of mixing shall the temperature exceed 210°C.

The mastic asphalt blocks (without coarse aggregate) shall show on analysis a composition within the limits as given in Table 500-42.

The mix shall be transported to the laying site in a towed mixer transporter having arrangements for stirring and keeping the mix hot during transportation.

516.4.5 Spreading

The mastic asphalt shall be laid, normally in one coat, at a temperature between 175°C and 210°C and spread uniformly by hand using wooden floats or by machine on the prepared surface. The thickness of the mastic asphalt and the percentage of added coarse aggregate shall be in accordance with Table 500-40 or as specified by the Engineer. Where necessary, battens of the requisite dimensions should be employed. Any blow holes that appear in the surface shall be punctured while the material is hot, and the surface made good by further floating.

Laying surface over existing bridge deck : Before laying bitumen over existing bridge deck, the existing cross fall/camber, expansion joint members and water drainage spouts shall be carefully examined for their proper functioning in the bridge deck structure and any deficiency found shall be removed. Loose elements in the expansion joint shall be firmly secured. The existing wearing coat shall be removed, as per Clause 2809. The cracks in the concrete surface, if any, shall be repaired and filled up properly or replaced by new concrete of specified grade before laying the bitumen mastic over bridge deck.

Laying over new bridge deck : New concrete bridge deck which is not in camber/cross fall shall first be provided with required camber and cross fall by suitable concrete or bituminous treatment.

Treatment where mastic asphalt is laid over a concrete surface : In case of laying over concrete surface, following measures shall be taken :

1) For proper bond with new concrete deck, surface shall be roughened by means of stiff broom or wire brush and it shall be free from ridges and troughs.
2) A thin bituminous tack coat (with bitumen of grade VG 30) shall be applied on the concrete deck before pouring mastic. The deck shall be dry. The quantity of bitumen for tack coat shall be as per Table 500-6.
3) After applying tack coat, chicken-mesh reinforcement of 1.5 mm dia steel wire with hexagonal or rectangular openings of 20-25 mm shall be placed and held properly in position on the concrete surface before pouring mastic.

516.4.6 Joints

All construction joints shall be properly and truly made. These joints shall be made by warming existing mastic asphalt by the application of an excess quantity of the hot mastic asphalt mix which afterwards shall be trimmed to leave it flush with the surfaces on either side.

516.4.7 Surface Finish

The mastic asphalt surface can have poor skid resistance after floating. in order to provide resistance to skidding, the mastic asphalt after spreading, while still hot and in a plastic condition, shall be covered with a layer of stone aggregate. This aggregate shall be 13.2 mm size (passing the 19.0 mm sieve and retained on the 6.7 mm sieve) or 9.5 mm size (passing the 13.2 mm sieve and retained on the 6.7 mm sieve) subject to the approval of the Engineer. Hard stone chips, complying with the quality requirements of Table 500-16, shall be precoated with bitumen at the rate of 2 ± 0.4 percent of VG 30 grade. The addition of 2 percent of filler complying with Table 500-9 may be required to enable this quantity of binder to be held without draining. The chips shall then be applied at the rate of 0.005 cu.m per 10 sq.m and rolled or otherwise pressed into the surface of the mastic layer when the temperature of the mastic asphalt is not less than 100°C.

516.5 Opening of Traffic

Traffic may be allowed after completion of the work when the mastic asphalt temperature of the completed layer has cooled to the daytime maximum ambient temperature.

516.6 Surface Finish and Quality Control of Work

The surface finish of the completed construction shall conform to the requirements of Clause 902.

For control of the quality of materials and the works carried out, the relevant provisions of Section 900 shall apply.

The surface of the mastic asphalt, tested with a straight edge 3 m long, placed parallel to the centre line of the carriageway, shall have no depression greater than 7 mm. The same shall also apply to the transverse profile when tested with a camber template.

516.7 Arrangements for Traffic

During the period of construction, arrangements for traffic shall be made in accordance with the provisions of Clause 112.

516.8 Measurement for Payment

Mastic asphalt shall be measured as finished work in square metres at a specified thickness, or by weight in tonnes as stated in the Contract.

516.9 Rate

The contract unit rate for mastic asphalt shall be payment in full for carrying out the required operations including full compensation for all components listed under Clause 501.8.2.2.

517 CRACK PREVENTION COURSES

517.1 Scope

The work shall consist of providing one or two coats of an elastomeric rubber membrane known as Stress Absorbing Membrane (SAM) over a cracked surface, followed by a covering of aggregate chips, and a Stress Absorbing Membrane Interlayer (SAMI), which is a material similar to SAM or which consists of a bitumen impregnated geotextile, as specified in the Contract.

517.2 Materials

517.2.1 Binder

Binder shall be a modified binder complying with the requirements of IS:15462 and IRC:SP:53, according to the requirements of the Contract, except that viscosity grade VG 10 complying with the requirements of IS:73 shall be used in the case of a bitumen impregnated geotextile.

517.2.2 Aggregate

The requirements of Clause 510.2.2 apply except that the Polished Stone Value requirement does not apply in the case of SAMI. Where required by the contract, aggregates shall be pre-coated by mixing them with 0.75 to 1.0 percent of paving bitumen by weight of chips in a suitable mixer, the chips being heated to 160°C and the bitumen to its application temperature. The pre-coated chips shall be allowed to cure for at least one week or until they become non-sticky and can be spread easily.

517.2.3 Rates of Spread of Binder and Aggregate

The rate of spread of binder and aggregate shall be as given in Table 500-43, as required by the Contract.

517.2.4 Geotextile

The geotextile as prescribed shall conform to the requirements of Clause 703.3.

517.3 Construction Operations

517.3.1 Weather and Seasonal Limitations

Clause 501.5.1 shall apply.

517.3.2 Preparation of Base

The base on which the SAM, SAMI or bitumen impregnated geotextile is to be laid shall be prepared, in accordance with Clause 501 and as directed by the Engineer. The surface shall be thoroughly cleaned either by using a mechanical brush or any other equipment/method approved by the Engineer. Dust removed in the process shall be blown off with compressed air.

517.3.3 Application of Binder

517.3.3.1 The equipment and general procedures shall all be in accordance with the Manual for Construction and Supervision of Bituminous Works. The application temperature for modified binder shall be 160°-170°C. Binder for bitumen impregnated geotextile shall be applied according to Clause 703.4.4. The surface on which the binder is to be applied shall be dry.

Table 500-43 : Quantity of Materials Required for 10 sq.m of Road Surface for Stress Absorbing Membrane

S. No.	Type and Width of Crack	Specification of SAM to be Applied	Quantity of Binder Kg/10m²	Quantity of Chipping
1)	Hair cracks and map cracks upto 3 mm width	Single coat SAM or 2nd coat of two coat SAM	8 – 10	0.10 m³ of 5.6 mm chips
2)	Map cracks or alligator cracks 3 mm to 6 mm width	Single coat SAM	10 – 12	0.11m³ of 5.6 mm chips
3)	Map cracks or alligator cracks 6 mm to 9 mm width	Two coat SAM 1st coat 2nd coat	 12 – 14 8 – 10	 0.12 m³ of 5.6 mm and 11.2 mm chips in 1:1 ratio 0.10 m³ of 5.6 mm chips
4)	Cracks above 9 mm width and cracked area above 50 percent	Two coat SAM 1st coat 2nd coat	 14 – 16 8 – 10	 0.12 m³ of 11.2 mm chips 0.10 m³ of 5.6 mm chips
5)	All types of cracks with crack width below 6 mm	Single coat SAM I	8 – 10	0.10 m³ of 5.6 mm chips
6)	All types of cracks with crack width above 6 mm	Single coat SAM I	10 – 12	0.10 m³ of 11.2 mm chips

517.3.3.2 Binder quanty for bitumen impregnated geotextile shall be in the range 0.9 to 1.2 litres/m². Binder quantity outside this range is permitted according to the geotextile manufacturer's instructions and subject to the agreement of the Engineer.

517.3.4 Application of Aggregates

The equipment and general procedures shall all be in accordance with the Manual for Construction and Supervision of Bituminous Works. Immediately after application of the modified binder, clean, dry aggregate shall be spread uniformly on the surface.

517.3.5 Sweeping

The surface of SAMs and SAMIs shall be swept to ensure uniform spread of aggregate and that there are no loose chips on the surface.

517.3.6 Two Coat SAM or SAMI

Where a two coat SAM or SAMI is required by the Contract, the second coat shall be applied within 90 days of the first coat.

517.3.7 Geotextile Placement

For bitumen impregnated geotextile, the requirements of Clause 703.4.4 shall apply.

517.4 Opening to Traffic

Traffic may be permitted over a SAM or SAMI 2 hours after rolling, but the speed shall be limited to 20 km/h, until the following day. Speed control measures are to be approved by the Engineer, prior to laying. Traffic shall not be allowed on the bitumen impregnated geotextile layer unless it is overlaid.

517.5 Surface Finish and Quality Control of Work

The surface finish shall conform to the requirements of Clause 902.

For control on the quality of materials and the works carried out, the relevant provisions of **Section 900** shall apply.

517.6 Arrangements for Traffic

During the period of construction, arrangements for traffic shall be made in accordance with the provisions of Clause 112.

517.7 Measurement for Payment

Each application of SAM, SAMI or bitumen impregnated geotextile shall be measured as finished work, for the area specified, in square metres.

517.8 Rate

The contract unit rate for SAM, SAMI or bitumen impregnated geotextile shall be payment in full for carrying out the required operations including full compensation for all components listed in Clause 501.8.8.2.

518 BITUMINOUS COLD MIX (INCLUDING GRAVEL EMULSION)

518.1 The Design Mix

The work shall consist of providing a bituminous cold mix consisting of a mixture of unheated mineral aggregate and emulsified or cutback bitumen, laid in a single layer of 25-75 mm. The mix shall either be a design mix or a recipe mix.

518.2 Materials

518.2.1 Binder

The binder shall be a slow/ medium setting bitumen emulsion conforming to IS:8887 or a medium curing cut-back conforming to IS:217.

The final selection of the binder shall be made only after laboratory evaluation with the aggregates to be used. A general guide for the selection of the binder is given in the Manual for Construction and Supervision of Bituminous Works.

The binder with the highest residual viscosity at ambient temperatures that can reasonably be handled by the mixing and laying equipment proposed shall be used.

518.2.1.1 Aggregates

The aggregates shall comply with the requirements of Clauses 505.2.2. and 505.2.3. If the aggregates are not properly coated with the binder, a small amount of hydrated lime on an approved antistripping agent (see Appendix 4) shall be proposed by the Contractor, for the approval of the Engineer.

518.2.1.2 Aggregate Grading and Binder Content

The combined aggregate grading for the particular mixture, when tested in accordance with IS:2386 Part I, (wet sieving method), shall fall within the limits shown in Table 500-44.

518.2.2 Mix Design

518.2.2.1 Requirements for the Mixture

Apart from conformity with the grading and quality requirements for individual ingredients, the mix shall meet the requirements set out in Table 500-45.

Table 500-44 : Aggregate Grading and Bitumen Content

Nominal Maximum Size (mm)	**9.5**	**13.2**	**19.0**
Allowable Thickness (mm)	**25-35**	**36-50**	**51-75**
IS Sieve (mm)	**Cumulative % by weight of total aggregate passing**		
37.5	–	–	–
26.5	–	–	100
19.0	–	100	90-100
13.2	100	90-100	–
9.5	90-100	–	60-80
4.75	60-80	45-70	35-65
2.36	35-65	25-55	20-50
0.30	6-25	5-20	3-20
0.075	2-10	2-9	2-8
	Binder content, percent by weight of total mix		
Cutback Emulsion	4–6 7–10		

The binder content shall be determined by the modified Marshall Test.

Table 500-45 : Mix Requirements for Designed Cold Mix

Parameter	**Emulsion[1]**	**Cutback[2]**
Minimum Stability	2.2 kN at 22.2°C for paving	2.2 kN at 25°C for maintenance 3.3 kN at 25°C for paving
Percent maximum stability loss on soaking	50[3]	25[4]
Minimum flow (mm)	2	2
Compaction level (number of blows)	50	75
Per cent air voids	3-5[5]	3–5
Per cent voids in mineral aggregate (VMA)	See Table 500-46	
Per cent minimum coating[6]	50	

Notes: [1]Using Marshall method for emulsified asphalt-aggregate cold mix design".

Appendix F, MS-14

[2]Using "Marshall method for cut-back asphalt-aggregate cold mix design:, Appendix H, MS-14

[3]With vacuum saturation and immersion

[4]Four days soak at 25°C.

[5]Refers to total voids in the mix occupied by air and water

[6]Coating Test, Appendix F, MS-14.

Table 500-46 : Minimum Percent Voids in Mineral Aggregate (VMA)

Nominal Maximum Particle Size IS Sieve (mm)	Minimum VMA (Percent)
9.5	16.0
12.5	15.0
19.0	14.0
25.0	13.0
37.5	12.0

518.2.2.2 Binder Content

The binder content shall be optimized by the Modified Marshall Test to achieve the requirements of the mix set out in Table 500-45. The method adopted shall be that described in Appendix F and H of Asphalt Institute's Manual, MS-14.

518.2.2.3 Job Mix Formula

The Contractor shall submit to the Engineer for approval at least one month before the start of the work, the job mix formula proposed for use in the works together with the following details:

i) Source and location of all materials;

ii) Proportions of all materials expressed as follows where each is applicable:

   a) Binder, as percentage by weight of total mix;

   b) Coarse aggregate/fine aggregate as percentage by weight of total aggregate;

iii) A single definite percentage passing each sieve for the mixed aggregate;

iv) The results of tests enumerated in Table 500-46 as obtained by the Contractor;

v) Test results of the physical characteristics of the aggregates to be used;

vi) Spraying temperature of binder if appropriate.

While working out the job mix formula, the Contractor shall ensure that it is based on a correct and truly representative sample of the materials that will actually be used in the work and that the mix and its different ingredients satisfy the physical and strength requirements of these Specifications.

Approval of the job mix formula shall be based on independent testing by the Engineer for which samples selected jointly with the Engineer of all ingredients of the mix shall be furnished by the Contractor as required by the former.

The approved job mix formula shall remain effective unless and until modified by the Engineer. Should a change in the source of materials be proposed, a new job mix formula shall be established by the Contractor and approved by the Engineer before actually using the materials.

518.2.2.4 Permissible Variation from the Job Mix Formula

It shall be the responsibility of the Contractor to produce a uniform mix conforming to the approved job mix formula, subject to the permissible variations of the individual percentages of the various ingredients in the actual mix from the job mix formula to be used, within the limits as specified in Tables 500-13 and 500-18. These variations are intended to apply to individual specimens taken for quality control tests in accordance with Section 900.

518.2.3 Construction operations

518.2.3.1 Weather and Seasonal Limitations

Construction with cold mix must not be undertaken when ambient temperatures below 10°C are expected, during rain, in standing water, or generally when poor weather is predicted. Bitumen emulsions and cutbacks depend on the evaporation of water and/or solvent for the development of their curing and adhesion characteristics. Cold weather, rain and high humidity slow down the rate of curing. Extra manipulation may be required to remove volatiles in cool and humid conditions. Wind increases the rate of evaporation.

518.2.3.2 Preparation of the Base

The base on which cold mix is to be laid shall be prepared, shaped and levelled to the required profile in accordance with Clauses 501 and 902 as appropriate, and a prime coat, where specified, shall be applied in accordance with Clause 502 or as directed by the Engineer.

518.2.3.3 Tack Coat

A tack coat in accordance with Clause 503 shall be applied over the base on which the cold mix is to be laid where specified in the Contract.

518.2.3.4 Preparation and Transportation of the Mix

Mixing can be carried out using one of the following types of mixer, which is provided with equipment for spraying the binder at a controlled rate and, if necessary, for heating the binder to a temperature at which it can be applied uniformly to the aggregate:

a) rotary drum type concrete mixer for small jobs or asphalt cold mix plant;

b) batch or continuous type mixer without dryer

A sufficient number of haul trucks with smooth, clean beds should be available to ensure continuous operation of the mixing plant. The type of truck used for transporting the mixture from the mixer to the road site shall suit to the Contractor's proposed laying procedure methodology.

518.2.3.5 Spreading

Designed cold mix shall be placed by a paver or grader as specified in the Contract. The mix shall not be placed on any wet surface or when weather conditions will otherwise prevent its proper handling or finishing.

If spreading by motor grader, the grader shall have a blade that is straight and sharp and long enough to ensure finishing to close, straight, transverse tolerances and all joints and linkages must be in good condition. The grader must be heavy enough to hold the blade firmly and uniformly on the surface while spreading the mix.

If climatic conditions and aggregate grading do not permit evaporation of moisture or volatiles without aeration by manipulation, a grader shall be used to place designed cold mix.

Other methods of spreading may be used as approved by the Engineer.

518.2.3.6 Compaction

Initial compaction of the laid material shall preferably be carried out using a pneumatic-tyred roller of a weight appropriate to the layer thickness to be compacted with single layer thickness being 25-100 mm and all compaction being in accordance with Clauses 501.6 and 501.7. Smooth tyres shall be used. Final rolling and smoothening of the surface should be completed using steel wheel rollers. The Contractor shall demonstrate at laying trials that his proposed laying and compaction methods can achieve a satisfactory result.

518.2.4 Opening to Traffic

Traffic shall not be allowed to run on new work until all the water or volatiles in the mix have evaporated, as determined by the Engineer. The rate of evaporation will be influenced by the temperature, humidity and wind conditions.

518.2.5 Surface Finish and Quality Control of Work

The surface finish of construction shall conform to the requirements of Clause 902. For control of the quality of materials and the works carried out, the relevant provisions of Section 900 shall apply.

518.2.6 Arrangements for Traffic

During the period of construction, arrangements for traffic shall be made in accordance with the provisions of Clause 112.

518.2.7 Measurement for Payment

Designed Cold Mix shall be measured as finished work, for the area covered, in cubic metres, by weight in metric tonnes, or by square metres at a specified thickness as specified in the Contract.

518.2.8 Rate

The contract unit rate for Designed Cold Mix shall be payment in full for carrying out the required operations including full compensation for all components listed in Clause 501.8.8.2. The rate shall cover the provision of the specified grade of cutback in the mix at 5 percent of the weight of the total mix or emulsion at 8 percent of the weight of the total mix. However any variation in quantity of binder will be assessed on the basis of the amount agreed by the Engineer and the payment adjusted, plus or minus, as per the rate for cutback or emulsion quoted in the Bill of Quantities.

518.3 Recipe Cold Mix

518.3.1 Scope

The work consists of construction of Recipe Cold Mixes composed of aggregate and emulsion binder which are laid immediately after mixing and while the emulsion is still substantially in an unbroken state. These mixes are considered suitable for emergency and repair work and temporary road surface improvement.

518.3.2 Materials

518.3.2.1 Binder

Emulsions of sufficient stability for mixing with the particular graded aggregate should be used. Bitumen emulsion shall be slow/ medium setting conforming to IS:8887.

518.3.2.2 Aggregates

Any normal, clean, but not necessarily dry, aggregate shall be used, conforming to Clauses 505.2.2 and 505.2.3 provided that it has sufficiently high crushing strength with regard to the traffic to be carried. Typical gradings are given in Table 500-47.

518.3.2.3 Aggregate Grading and Binder Content

When tested in accordance with IS:2386 Part 1 (wet sieving methods) the combined aggregate grading for the particular mix shall fall within the limits shown in Table 500-47. The actual quantity of emulsion to be used shall be approved by the Engineer after seeing the results of trial mixes made in the laboratory.

518.3.3 Construction Operations

518.3.3.1 Weather and Seasonal Limitations

As per Clause 518.2.3.1.

518.3.3.2 Preparation of Base

As per Clause 518.2.3.2.

518.3.3.3 Tack Coat

A tack coat in accordance with Clause 503 shall be applied over the base on which the cold mix is to be laid if specified in the Contract or required by the Engineer.

518.3.3.4 Preparation and Transportation of the Mix

As per Clause 518.2.3.4.

518.3.3.5 Spreading

As per Clause 518.2.3.5.

Table 500-47 : Composition of Recipe Mixes

Nominal Size (mm) and Type of Course	40 Single Course	40 Open Textured Base Course	14 Open Textured Wearing Course	6 Medium Textured Wearing Course
Allowable Thickness (mm)	75	75	31-50	21-30
IS Sieve Size mm	Cumulative % by weight of total aggregate passing			
45	100	100	–	–
37.5	90-100	90-100	–	–
26.5	55-90	55-85	–	–
19	–	–	100	–
13.2	35-55	15-35	90-100	–
9.5	–	–	55-75	100
6.3	20-30	–	25-45	90-100
3.35	10-20	0-10	15-25	45-65
2.36	–	–	–	75-100
1.18	–	–	–	10-30
0.60	–	–	–	–
0.30	2-10	–	–	–
0.15	–	–	–	–
0.075	–	–	2-6	2-8
Emulsion grade and quantity				
Quantity(1) Kg/ tonne	55 to 70	45 to 65	70 to 90	85 to 100

518.3.3.6 Compaction

As per Clause 518.2.3.6.

518.3.4 Opening to Traffic

As per Clause 518.2.4.

518.3.5 Surface Finish and Quality Control of Work

As per Clause 518.2.5.

518.3.6 Arrangements for Traffic

As per Clause 518.2.6.

518.3.7 Measurement for Payment

As per Clause 518.2.7.

518.3.8 Rate

The contract unit rate for Recipe Cold Mix shall be payment in full for carrying out the required operations including full compensation for all components listed in Clause 501.8.8.2. The rate shall cover the provision of the specified grade of emulsion at the lower quantity in the range for each type of mix indicated in Table 500-47. However any variation of quantity in emulsion will be assessed on the basis of the amount agreed by the Engineer and the payment adjusted plus or minus, as per the rate for emulsion quoted in the Bill of Quantities.

519 RECYCLING OF BITUMINOUS PAVEMENT

519.1 Scope

This work covers the recycling of existing bituminous pavement materials to upgrade an existing bituminous pavement which has served its initially intended purpose. The work shall be performed on such widths and lengths as shall be directed by the Engineer and may consist of pavement removal, stockpiling of materials from the old pavement, addition of new bitumen and untreated aggregates in the requisite proportions, mixing, spreading and compaction of the blended materials.

These specifications cover the hot process.

519.2 Reclaimed Bituminous Materials for Central Plant Recycling

519.2.1 The reclaimed bituminous material shall be used in the production of bituminous macadam and dense bituminous macadam subject to the Clauses 519.2.3 to 519.2.8, and subject to satisfactory completion of full investigations in respect of all related materials entirely at the Contractor's cost and subject to the approval of the Engineer. For

estimation purposes, an amount not greater than 60 per cent of reclaimed bituminous material shall be assumed.

519.2.2 Materials for Recycled Pavement

The recycled materials shall be a blend of reclaimed and new materials proportioned to achieve a paving mixture with the specified engineering properties. The reclaimed materials shall be tested and evaluated to find the optimum blend meeting the mixture requirements. Such testing and evaluation shall be carried out on representative sample, either cores sampled from the carriageway or samples taken from stockpiles in accordance with current practice. The sampling frequency should be sufficient to determine how consistent the reclaimed material is and to provide representative samples for composition analysis and measurement of properties of recovered binder. As an absolute minimum, one sample to represent 500 m two lane carriageway shall be taken.

519.2.3 Bitumen Extraction

The procedure described in ASTM D-2172 shall be used to quantitatively separate aggregates and bitumen from any representative sample of reclaimed bituminous pavement.

519.2.4 Aggregate Evaluation

Mechanical sieve analysis (IS:2386, Part I, wet sieving method) shall be performed on the aggregate portion of the reclaimed bituminous pavement sample to determine the grading. It is essential that the reclaimed materials to be recycled are consistent, as variable materials will cause problems with the control of quality and impede the efficiency of the recycling operation. Suitable sources of consistent material either in existing pavements, from stockpiled of known origin or from another suitable source shall be identified before a decision can be made on the optimum percentage of reclaimed material.

After selecting the proportion of reclaimed materials to be recycled, the grading of the mixture may need adjustment, to meet Specification requirements, by the addition of selected aggregate sizes.

519.2.5 Evaluation of Bitumen

When the amount of reclaimed bituminous materials to be used in the mixture exceeds 10 percent, the penetration value of the recovered binder from the reclaimed bituminous material, before mixing, shall exceed 15 pen, after recovery of binder in accordance with the requirements of BS:2000:Part 397, when tested in accordance with IS:1203. Provided the

above requirement is met, hardening of the old binder, during the original mixing process or through ageing, can be compensated for by adding softer bitumen, to obtain the appropriate final grade of binder.

The determination of the type and amount of binder required to be added in the final mix is essentially a trial and error procedure.

After mixing with recycled materials, the binder recovered from the mixture shall have a recovered penetration value not less than the value specified in Table 500-48.

Table 500-48 : Minimum Recovered Binder Penetration of Recycled Mixture

Specified Grade of Binder Viscosity Grade	Minimum Recovered Penetration Value of Binder after Mixing
40 (45 pen)	27
30 (65 pen)	39
10 (90 pen)	54

519.2.6 Rejuvenators

The use of rejuvenators, and a test to measure their effectiveness, is given in Clause 519.6.3.

519.2.7 Untreated Aggregates

If necessary, fresh untreated aggregates shall be added to the reclaimed bituminous pavement to produce a mix with the desired grading. The aggregate shall be checked for quality requirements in accordance with Table 500-7 or Table 500-10 as appropriate. Reclaimed aggregate, if any, or any aggregate normally used for the desired bituminous mix, or both, may be used for this purpose.

519.2.8 Combined Aggregate Grading

The blend reclaimed and new aggregate shall meet the grading criteria specified in the relevant parts of Clauses 505 or 506, as appropriate and as approved by the Engineer. The blend of aggregates shall be checked for resistance to stripping as specified in Tables 500-7 or 500-10 as appropriate.

519.3 Mixture Design

The combined aggregate grading and binder content shall comply with the relevant tables in Clauses 504 or 505 as appropriate. The mix design shall also comply with the requirements of Table 500-10. There may be a variation on three to four sieves with respect to percent passing, the permissible variation shall not exceed 3 to 4 percent per sieve.

519.4 Reclaiming Old Pavement Materials

The removal of pavement materials to the required depth shall be accomplished either at ambient temperature (cold process) or at an elevated temperature (hot process), as approved by the Engineer.

519.4.1 Cold Removal Process

In the cold process, the ripping and crushing operations shall be carried out using scarifiers, grid rollers, or rippers or by any other means as directed by the Engineer. The removed materials shall be loaded and hauled for crushing to the required size as directed by the Engineer. Alternatively, cold milling or planning machines can be used to reclaim bituminous pavement to controlled depths. Thereafter the bituminous layers are removed, any remaining aggregate materials that are to be incorporated in the recycled hot mix shall be scarified and removed. When the pavement material removal is completed, any drainage deficiencies shall be corrected. After that, the base/sub-base, as the case may be, shall be cut, graded and compacted to the required profile and density.

519.4.2 Hot Removal Process

In the hot process, the road surface shall be heated, by infra-red/ hot-air heating system, before scarification. A self propelled plant fitted with suitable arrangement for heating the existing bituminous surface shall be used. A milling drum shall follow the planer for removing the heated soft bituminous layer. The depth, width and speed of travel shall be adjusted to suit specific requirements as directed by the Engineer. During the heating process, the surface temperature of the road shall not exceed 200°C for more than 5 minutes.

519.4.3 Stockpiling

In the cold process, the reclaimed bituminous pavement material shall be stockpiled with height of stockpiles not exceeding 3 m. The reclaimed untreated aggregate base/sub-base material shall be stockpiled in the same manner as new aggregate. The number and location of stockpiles shall be carefully planned for efficient operation of the hot-mix plant.

519.5 Mixing and Laying

the requirements of Clauses 504.3 or 505.4, as appropriate shall apply.

519.6 In Situ Recycling – The Remix and Repave Processes

519.6.1 Scope

In the process of repaving, the existing surface is preheated and scarified but the scarified material is not removed. A layer of fresh bituminous mix material prepared in the integrated mixing unit of the plant is then spread evenly on the scarified surface to give a uniform profile. The spread material should be compacted as soon as possible after laying. In the process, the total thickness of the pavement is increased by up to 50 mm.

In the remix process, the scarified material should be taken from the mixing unit of the plant where it is recycled with fresh binder, aggregate and recycling agent. Then the recycled mixture is spread on the preheated surface and tamped and compacted to the required profile.

519.6.2 Heating and Scarifying

Surfaces to be treated shall be heated by plant with surfaces insulated and fully enclosed. The heated width of surfacing shall exceed the scarified width by at least 75 mm on each side, except against the edge of the carriageway or kerb face. When new surfacing material is spilled onto the road surface it shall be removed before the existing surface is heated and scarified. Areas of unscarified material shall not exceed 50 mm x 50 mm.

The depth of scarification shall be such that the bottom of the scarified layer is parallel to and below the finished road surface level by the thickness of wearing course material specified. A tolerance of ±6 mm is permissible.

Where street furniture and other obstructions occur, these shall be suitably protected or removed and the void covered. Surface dressing and large areas of road markings shall be removed by milling, planning scarifying or by similar approved processes.

The heated surface shall be evenly scarified to comply with the requirements of this Clause. When street furniture is left in place or raised, the adjacent area shall be scarified by other means, with the material either left in place or removed, prior to passage of the machine. If furniture needs to be repositioned on completion of work, the new wearing course material shall be used to make good the road surface for a maximum width of 200 mm around the obstruction.

During the reheating process, the surface temperature of the road shall not exceed 200°C for more than 5 minutes.

519.6.3 Rejuvenator

For Remix, when required, rejuvenator shall be uniformly sprayed across the fullwidth of the processed material. The machine shall incorporate a metre for continuous verification of quantities which shall be within ±5% of the specified rate. The volume of rejuvenator shall vary in relation to the operating speed of the machine, which shall be related to the volume of material mixed or scarified.

The rejuvenator shall be a non-emulsified aromatic extract. Its properties shall be verified using the Rolling Thin Film Oven Test.

Rejuvenation of the existing pavement may also be performed by adding new hot-mix bituminous material containing a soft binder for restoring the binder in the existing pavement to the required viscosity. Use of rejuvenating oil may be resorted to in case the target values of viscosity, penetration and softening are not met.

519.6.4 Mixing

When required, new hot-mix material shall be mixed with the heated and scarified road pavement material in a pugmill within the Remix machine, observing the mixing temperatures specified in Table 500-2.

After mixing, the recycled bituminous materials shall be automatically led to a finishing unit, which spreads and levels the mixture to the specified thickness and cross-section. The new bituminous concrete wearing course shall comply with Clause 507.

519.6.5 Additional Material (General)

The proportion of new hot-mix bituminous material, and the proportion of existing bituminous pavement material shall be as directed by the Engineer, together with the amount the road surface level is to be raised (if any).

The type and quantity of the new hot-mix material shall be determined by using the Marshall Mix Design procedure specified in the Asphalt Institute Manual MS-2, before work commences. Remix designs shall incorporate the stated proportion of material sampled from the existing road surface.

When additional coarse or fine aggregate or filler are required to be added, they shall comply with the requirements of Clause 508.2. The amount of additional coarse or fine aggregate or filler to be added to the existing bituminous pavement material shall be notified to the Engineer.

519.6.6 Additional Aggregate (Remix Process)

The coarse aggregate, fine aggregate and filler added to the Remixed material shall comply with the requirements of Clause 507.2.

519.6.7 New Surfacing (Repave and Remix/Repave Processes)

New surfacing material shall be bituminous concrete wearing course complying with Clause 508, or other wearing course material approved by the Engineer.

The new surfacing material shall be laid on, and compacted with, the reprofiled surfacing, which shall be at a temperature within the range of 100°C to 150°C.

519.6.8 Binder

The binder shall be recovered from samples taken from each layer of material laid. The method of recovery shall be in accordance with BS:2000: Part 397 or an equivalent test. The penetration of the binder shall be in the range 35-70 pen.

519.6.9 Mixture Design

The surfacing material shall be sampled from the paver hopper or augers. Care shall be taken that only the material forming the new surface layer is sampled. The sample shall be reduced at site by rifling or quartering to approximately 5 kg and placed loose in an air-tight container.

The sample shall only be reheated once whilst within the container. As soon as the sample reaches the required temperature, the reheated material shall be remixed and three Marshall test specimens prepared in accordance with the procedures specified in MS-2.

The bulk density of each specimen shall be measured before Marshall Stability testing. The mean stability and flow of the three specimen measured in accordance with the procedures specified in MS-2, shall comply with the requirements of Table 500-11.

The three Marshall specimens shall be combined and the maximum theoretical specific gravity (G_{mm}) of the mix shall be determined in accordance with ASTM D 2041. This maximum theoretical specific gravity (G_{mm}) corresponds to 0% air voids in the mix. The percent air voids (Pa) in the specimen of the compacted mixture given by $P_a=(G_{mm}-G_{mb}x100)/G_{mm}$ shall meet the requirements of air voids laid down in Table 500-10, where G_{mb} is the actual bulk specific gravity of a Marshall specimen determined in the Laboratory.

519.7 Opening to Traffic

For recycled material forming the base or binder course layer, Clauses 504.5 or 505.5 shall apply as appropriate. For recycled material forming the wearing course layer, Clause 508.4 shall apply.

519.8 Surface Finish and Quality Control

The surface finish of the completed construction shall conform to the requirements of Clause 902.

For control of the quality of materials and the works carried out the relevant provisions of Section 900 shall apply.

519.9 Arrangements for Traffic

During the period of construction, arrangements for traffic shall be made in accordance with the provisions of Clause 112.

519.10 Measurement for Payment

The recycled pavement work shall be measured in cubic metres or tonnes of finished work as stated in the Contract.

519.11 Rate

The contract unit rate for recycled pavement shall be payment in full for carrying out the required operations including full compensation for all items as Clause 501.8.8.2.

520 SUPPLY OF STONE AGGREGATES FOR PAVEMENT COURSES

520.1 Scope

This Clause shall apply to the supply of stone aggregates only. The work shall consist only of collection, transportation and stacking the stone aggregates and stone filler for subsequent use in pavement courses. The actual work of laying the pavement courses shall, however, be governed by the individual Specification Clause for the actual work, given elsewhere in these Specifications. The size and quantities of the aggregates to be supplied shall be so selected by the Engineer that the grading requirements set forth in the individual Specification Clauses for the pavement courses, for which the supply is intended, are satisfied.

All the materials shall be procured from approved sources and shall conform to the physical requirements, specified in the respective Specification Clauses for the individual items given elsewhere in these Specifications.

520.2 Sizes of Stone Aggregates

The stone aggregates shall be designated by their standard sizes in the Contract and shall conform to the requirements shown in Table 500-49.

520.3 Stacking

520.3.1 Coarse Aggregates

Only the aggregates satisfying the Specifications requirements shall be conveyed to the roadside and stacked. Each size of aggregate shall be stacked separately. Likewise, materials obtained from different quarry sources shall be stacked separately and in such a manner that there is no contamination of one source with another.

Table 500-49 : Size Requirements for Coarse Stone Aggregates

S. No.	Nominal Size of Aggregate	Designation of Sieve Through which the Aggregates shall Wholly Pass	Designation of Sieve on which the Aggregates shall be Wholly Retained
1)	75 mm	106 mm	63 mm
2)	63 mm	90 mm	53 mm
3)	45 mm	53 mm	26.5 mm
4)	26.5 mm	45 mm	22.4 mm
5)	22.4 mm	26.5 mm	13.2 mm
6)	13.2 mm	22.4 mm	11.2 mm
7)	11.2 mm	13.2 mm	6.7 mm
8)	6.7 mm	11.2 mm	2.8 mm

520.3.2 Fine Aggregate

As stated in the individual relevant Specification Clauses.

The aggregates shall be stacked clear of the roadway on even clear hard ground, or on a platform prepared in advance for the purpose by the Contractor at his own cost and in a manner that allows correct and ready measurement. If the stockpile is placed on ground

where the scraping action of the loader can contaminate the material with underlying soil, then the stockpile shall be rejected by the Engineer. Materials shall not be stacked in locations liable to inundation or flooding.

The dimensions of the stockpiles and their locations shall be approved by the Engineer. Where the material is improperly stacked, the Engineer shall direct complete re-stacking of the materials in an approved manner at the Contractor's cost.

Stone filler shall be supplied in a dry state in bags or other suitable containers approved by the Engineer and shall be protected from the environment, so as to prevent deterioration in quality.

520.4 Quality Control of Materials

The Engineer shall exercise control over the quality of the materials so as to ascertain their conformity with the Specifications requirements, by carrying out tests for the specified properties in accordance with Section 900 of these Specifications.

Materials shall only be brought to site from a previously tested and approved source, and any materials not conforming to the requirements of the Specification shall be rejected by the Engineer and removed from the work site at the cost of the Contractor.

520.5 Measurement for Payment

Coarse and fine aggregates supplied to the site shall be paid for in cubic metres. The actual volume of the aggregates to be paid for shall be computed after deducting the specified percentages in Table 500-50, from the volume computed by stack measurements, to allow for bulking.

Table 500-50 : Percent Reduction In Volume of Aggregates

S. No.	Standard Size of Aggregates	Percentage Reduction in Volume Computed by Stack Measurements to Arrive at the Volume to be Paid for
1)	75 mm and 63 mm	12.5
2)	45 mm and 26.5 mm	10.0
3)	22.4 mm, 13.2 mm, 11.2 mm and 6.7 mm	5.0
4)	Fine aggregate	5.0

Unless otherwise directed by the Engineer, measurements shall not be taken until sufficient materials for use on the road have been collected and stacked. Immediately after measurement, the stacks shall be marked by white wash or other means as directed by the Engineer.

Stone filler as delivered to the site shall be measured in tonnes.

520.6 Rates

The contract unit rates for different sizes of coarse aggregate, fine aggregate and stone filler shall be payment in full for collecting, conveying and stacking or storing at the site including full compensation for:

i) all royalties, fees, rents where necessary;

ii) all leads and lifts; and

iii) all labour, tools, equipment and incidentals to complete the work to the specifications.

iv) All necessary testing of material, both initial, to approve the source, and regular control testing thereafter.

600

CONCRETE PAVEMENT

601 DRY LEAN CEMENT CONCRETE SUB-BASE

601.1 Scope

601.1.1 The work shall consist of construction of (zero slump) dry lean concrete sub-base for cement concrete pavement in accordance with the requirements of these Specifications and in conformity with the lines, grades and cross-sections shown on the drawings or as directed by the Engineer. The work shall include furnishing of all plant and equipment, materials and labour and performing all operations, in connection with the work, as approved by the Engineer.

601.1.2 The design parameters of dry lean concrete sub-base, viz., width, thickness, grade of concrete, details of joints, if any, etc. shall be as stipulated in the drawings.

601.2 Materials

601.2.1 Sources of Materials

The Contractor shall indicate to the Engineer the source of all materials with relevant test data to be used in the dry lean concrete work sufficiently in advance and the approval of the Engineer for the same shall be obtained at least 45 days before the scheduled commencement of the work in trial length. If the Contractor later proposes to obtain the materials from a different source during the execution of main work, he shall notify the Engineer with relevant test data for his approval at least 45 days before such materials are to be used.

601.2.2 Cement

Any of the following types of cement may be used with prior approval of the Engineer:

S. No.	Type	Conforming to
i)	Ordinary Portland Cement 43 Grade	IS:8112
ii)	Portland Slag Cement	IS:455
iii)	Portland Pozzolana Cement	IS:1489-Part I

If the subgrade soil contains soluble sulphates in a concentration more than 0.5 percent, sulphate resistant cement conforming to IS:6909 shall be used.

Cement to be used may preferably be obtained in bulk form. It shall be stored in accordance with stipulations contained in Clause 1014 and shall be subjected to acceptance test prior to its immediate use.

601.2.3 Fly-ash

Fly-ash upto 20 percent by weight of cementitious material (cement+flyash) may be used

along with 43/53 grade cement may be used to replace OPC cement grade 43 upto 30 percent by weight of cement. Fly-ash shall conform to IS:3812 (Part 1) and its use shall be permitted only after ensuring that facilities exist for uniform blending through a proper mechanical facility with automated process control like batch mix plant conforming to IS:4925 and IS:4926.

601.2.4 Aggregates

601.2.4.1 Aggregates for lean concrete shall be natural material complying with IS:383. The aggregates shall not be alkali reactive. The limits of deleterious materials shall not exceed the requirements set forth in Table 600-2. In case the Engineer considers that the aggregates are not free from dirt, the same may be washed and drained for at least 72 hours before batching, or as directed by the Engineer.

601.2.4.2 Coarse Aggregates

Coarse aggregates shall comply with Clause 602.2.6.2, except that the maximum size of the coarse aggregate shall be 26.5 mm, and aggregate gradation shall comply with Table 600-1.

601.2.4.3 Fine Aggregates

The fine aggregate shall comply with Clause 602.2.6.3.

601.2.4.4 The material after blending shall conform to the grading as indicated in Table 600-1.

Table 600-1 : Aggregate Gradation for Dry Lean Concrete

Sieve Designation	Percentage by Weight Passing the Sieve
26.50 mm	100
19.0 mm	75-95
9.50 mm	50-70
4.75 mm	30-55
2.36 mm	17-42
600 micron	8-22
300 micron	7-17
150 micron	2-12
75 micron	0-10

601.2.5 Water

Water used for mixing and curing of concrete shall comply with Clause 602.2.7.

601.2.6 Storage of Materials

All materials shall be stored in accordance with the provisions of Clauses 602.2.12 of these Specifications and other relevant IS Specifications.

601.3 Proportioning of Materials for the Mix

601.3.1 The mix shall be proportioned with a maximum aggregate cementitious material ratio of 15:1. The water content shall be adjusted to the optimum as per Clause 601.3.2 for facilitating compaction by rolling. The strength and density requirements of concrete shall be determined in accordance with Clauses 601.7 and 601.8 by making trial mixes. Care should be taken to prevent one size of aggregate falling into the other size of the hopper of the feeding bin while loading the individual size of aggregates into the bins.

601.3.2 Moisture Content

The optimum water content shall be determined and demonstrated by rolling during trial length construction and the optimum moisture content and degree of compaction shall be got approved from Engineer. While laying in the main work, the lean concrete shall have a moisture content between the optimum and optimum +2 percent, keeping in view the effectiveness of compaction achieved and to compensate for evaporation losses.

601.3.3 Cement Content

The cement content in the dry lean concrete shall be such that the strength specified in Clause 601.3.4 is achieved. The minimum cement content shall be 150 kg/cu.m of concrete. In case flyash is blended at site as part replacement of cement, the quantity of flyash shall not be more than 20 percent by weight of cementitious material and the content of OPC shall not be less than 120 kg/cu.m.

If this minimum is not sufficient to produce dry lean concrete of the specified strength, it shall be increased as necessary by the Contractor at his own cost.

601.3.4 Concrete Strength

The average compressive strength of each consecutive group of 5 cubes made in accordance with Clause 903.5.1.1 shall not be less than 10 MPa at 7 days. In addition, the minimum compressive strength of any individual cube shall not be less than 7.5 MPa at 7 days. The design mix complying with the above Clauses shall be got approved from the Engineer and demonstrated in the trial length construction.

601.4 Sub-grade

The sub-grade shall conform to the grades and cross-sections shown on the drawings and shall be laid and compacted in accordance with Clause 305. The subgrade strength shall

correspond to the design strength specified in the Contract. As far as possible, the construction traffic shall be avoided on the prepared sub-grade.

601.5 Drainage Layer

A drainage layer conforming to Clause 401 shall be laid above the subgrade before laying the Dry Lean Concrete sub-base, as specified in the drawings and the Contract.

601.6 Construction

601.6.1 General

The Dry Lean Concrete shall be laid on the prepared granular drainage layer. The pace and programme of the Dry Lean Concrete sub-base construction shall be matching suitably with the programme of construction of the cement concrete pavement over it. The Dry Lean Concrete sub-base shall be overlaid with concrete pavement only after 7 days of sub-base construction.

601.6.2 Batching and Mixing

The batching plant shall be capable of proportioning the materials by weight, each type of material being weighed separately in accordance with Clauses 602.9.2, 602.9.3.1 and 602.9.3.2.

The design features of Batching Plant should be such that the plant can be shifted quickly.

601.6.3 Transporting

Plant mix lean concrete shall be discharged immediately from the mixer, transported directly to the point where it is to be laid and protected from the weather by covering the tipping trucks with tarpaulin during transit. The concrete shall be transported by tipping trucks, sufficient in number to ensure a continuous supply of material to feed the laying equipment to work at a uniform speed and in an uninterrupted manner. The lead of the batching plant to paving site shall be such that the travel time available from mixing to paving as specified in Clause 601.6.5.2 will be adhered to. Tipping truck shall not have old concrete sticking to it. Each tipping truck shall be washed with water jet before next loading as and when required after inspection.

601.6.4 Placing

Lean concrete shall be placed by a paver with electronic sensor on the drainage layer or as specified in the Contract. The equipment shall be capable of laying the material in one layer

in an even manner without segregation, so that after compaction the total thickness is as specified. The paving machine shall have high amplitude tamping bars to give good initial compaction to the sub-base. One day before placing of the dry lean cement concrete sub-base, the surface of the granular sub-base/drainage layer shall be given a fine spray of water and rolled with a smooth wheeled roller.

Preferably the lean concrete shall be placed and compacted across the full width of the two lane carriageway, by constructing it in one go. In roads with carriageway more than 2 lanes a longitudinal joint shall be provided. Transverse butt type joint shall be provided at the end of the construction in a day. Transverse joints in the concrete pavement shall not be coterminous with the transverse construction joint of the Dry Lean Concrete.

The Dry Lean Concrete shall be laid in such a way that it is atleast 750 mm wider on each side than the proposed width including paved shoulders of the concrete pavement. The actual widening shall be decided based on the specifications of the paver, such that the crawler moves on the Dry Lean Concrete, and the cost of extra width shall be borne by the Contractor.

601.6.5 Compaction

601.6.5.1 The compaction shall be carried out immediately after the material is laid and levelled. In order to ensure thorough compaction, rolling shall be continued on the full width till there is no further visible movement under the roller and the surface is well closed. The minimum dry density obtained shall not be less than 98 percent of that achieved during the trial length construction in accordance with Clause 601.7. The densities achieved at the edges i.e. 0.5 m from the edge shall not be less than 96 percent of that achieved during the trial construction.

601.6.5.2 The spreading, compacting and finishing of the lean concrete shall be carried out as rapidly as possible and the operation shall be so arranged as to ensure that the time between the mixing of the first batch of concrete in any transverse section of the layer and the final finishing of the same shall not exceed 90 minutes when the temperature of concrete is between 25°C and 30°C, and 120 minutes if less than 25°C. This period may be reviewed by the Engineer in the light of the results of the trial run but in no case shall it exceed 120 minutes. Work shall not proceed when the temperature of the concrete exceeds 30°C. If necessary, chilled water or addition of ice may be resorted to for bringing down the temperature. It is desirable to stop concreting when the ambient temperature is above 35°C. After compaction has been completed, roller shall not stand on the compacted surface for the duration of the curing period except during commencement of next day's work near the location where work was terminated the previous day.

601.6.5.3 Double drum smooth-wheeled vibratory rollers of minimum 80 to 100 kN

static weight are suitable for rolling dry lean concrete. In case any other roller is proposed, the same shall be got approved from the Engineer, after demonstrating its performance. The number of passes required to obtain maximum compaction depends on the thickness of the dry lean concrete, the compactibility of the mix and the weight and type of the roller and the same as well as the total requirement of rollers for the jobs shall be determined during trial run by measuring in-situ density and the scale of the work to be undertaken.

Except on super elevated portions where rolling shall proceed from the inner edge to the outer, rolling shall begin from the edges gradually progressing towards the centre. First, the edge/edges shall be compacted with a roller running forward and backward. The roller shall then move inward parallel to the centerline of the road, in successive passes uniformly lapping preceding tracks by at least one half width.

601.6.5.4 A preliminary pass without vibration to bed the Dry Lean Concrete down shall be given followed by the required number of passes to achieve the desired density and, a final pass without vibration to remove roller with vibration marks and to smoothen the surface.

Special care and attention shall be exercised during compaction near joints, kerbs, channels, side forms and around gullies and manholes. In case adequate compaction is not achieved by the roller at these locations, use of plate vibrators shall be made, if so directed by the Engineer.

601.6.5.5 The final lean concrete surface on completion of compaction shall be well closed, free from movement under roller and free from ridges, low spots, cracks, loose material, pot holes, ruts or other defects. The final surface shall be inspected immediately on completion and all loose, segregated or defective areas shall be corrected by using fresh lean concrete material, laid and compacted. For repairing honeycombed/hungry surface, concrete with aggregates of size 10 mm and below shall be spread and compacted as per Specifications. It is necessary to check the level of the rolled surface for compliance. Any level/thickness deficiency shall be corrected after applying concrete with aggregates of size 10 mm and below after roughening the surface. Surface regularity also shall be checked with 3 m straight edge. Strength tests shall be carried out, and if deficiency in strength is noticed, at least three (evenly spread) cores of minimum 100 mm dia per km shall be cut to check deficiency in strength. The holes resulting from cores shall be restored by filling with concrete of the specified strength and compacted by adequate rodding.

601.6.5.6 Segregation of concrete in the tipping trucks shall be controlled by moving the dumper back and forth while discharging the mix into the same or by any appropriate means. Paving operation shall be such that the mix does not segregate.

601.6.6 Joints

Construction and longitudinal joints shall be provided as per the drawings.

Transverse butt type joint shall be provided at the end of the construction in a day. Longitudinal construction joint shall be provided only when full width paving is not possible. Transverse joints in Dry Lean concrete shall be staggered from the construction butt type joint in Concrete pavement by 800-1000 mm.

Longitudinal joint in Dry Lean Concrete shall be staggered by 300-400 mm from the longitudinal joint of concrete pavement.

At longitudinal or transverse construction joints, unless vertical forms are used, the edge of compacted material shall be cut back to a vertical plane where the correct thickness of the properly compacted material has been obtained.

601.6.7 Curing

As soon as the lean concrete surface is compacted, curing shall commence. One of the following methods shall be adopted:

a) Curing may be done by covering the surface by gunny bags/hessian, which shall be kept wet continuously for 7 days by sprinkling water.

b) The curing shall be done by spraying with approved resin based aluminized reflective curing compound conforming to ASTM-C 309-81 in accordance with Clause 602.9.12. As soon as the curing compound has lost its tackiness, the surface shall be covered with wet hessian for three days. The rate of application shall be as recommended by the supplier.

c) Wax-based white pigmented curing compound with water retention index of not less than 90 percent shall be used to cure the dry lean concrete. The curing compound shall conform to BS:7542. The compound shall be applied uniformly with a mechanical sprayer and with a hood to protect the spray from the wind. The curing compound shall be applied over the entire exposed surface of the Dry Lean Concrete, including sides and edges, at the rate of 0.2 litres/sq.m, or as recommended by the supplier.

   The first application, referred to as curing application shall be applied immediately after the final rolling of Dry Lean Concrete is completed. As soon as the curing compound loses tackiness, the surface shall be covered with wet hessian for three days. The second application of curing compound also referred to as the debonding application, shall be applied 24 to 48 hours prior to the placement of the concrete pavement. Any damaged Dry Lean Concrete shall be corrected prior to the second application. Normally, the manufacturer's instructions shall be followed for its application.

601.7 Trial Mixes

The Contractor shall make trial mixes of dry lean concrete with moisture contents like 5.0, 5.5, 6.0, 6.5 and 7.0 percent using specified cement content, specified aggregate grading and aggregate-cement ratio specified in Clause 601.3.1. Optimum moisture and density shall be established by preparing cubes with varying moisture contents. Compaction of the mix shall be done in three layers with vibratory hammer fitted with a square or rectangular foot as described in Clause 903.5.1.1. After establishing the optimum moisture, a set of six cubes shall be cast at optimum moisture for the determination of compressive strength on the third and the seventh day. Trial mixes shall be repeated if the strength is not satisfactory by increasing cement content. After the mix design is approved, the Contractor shall construct a trial section in accordance with Clause 601.8.

If during the construction of the trial length, the optimum moisture content determined as above is found to be unsatisfactory, the Contractor may make suitable changes in the moisture content to achieve the satisfactory mix. The cube specimens prepared with the changed mix content should satisfy the strength requirement. Before production of the mix, natural moisture content of the aggregate should be determined on a day-to-day basis so that the moisture content could be adjusted. The mix finally designed should neither stick to the rollers nor become too dry resulting in ravelling of surface.

601.8 Trial Length

601.8.1 The trial length shall be constructed at least 14 days in advance of the proposed date of commencement of work. At least 30 days prior to the construction of the trial length, the Contractor shall submit for the Engineer's approval a "Method Statement" giving detailed description of the proposed materials, plant, equipment, mix proportions, and procedure for batching, mixing, laying, compaction and other construction procedures. The Engineer shall also approve the location and length of trial construction which shall be a minimum of 100 m length laid in two days and for full width of the pavement. The trial length shall be outside the main works. The trial length shall contain the construction of at least one transverse construction joint involving hardened concrete and freshly laid Dry Lean Concrete sub-base. The construction of trial length shall be repeated till the Contractor proves his ability to satisfactorily construct the Dry Lean Concrete sub-base.

601.8.2 After the construction of the trial length, the in-situ density of the freshly laid material shall be determined by sand replacement method. Three density holes shall be made at locations equally spaced along a diagonal that bisects the trial length and average of these densities shall be determined. The density holes shall not be made in the strip 500 mm from the edges. The average density obtained from the three samples collected shall be the reference density and is considered as 100 percent. The field density of regular work will be compared with this reference density in accordance with Clauses 601.6.5.1 and 903.5.1.2.

601.8.3 The hardened concrete shall be cut over 3 m width and reversed to inspect the bottom surface for any segregation taking place. The trial length shall be constructed after making necessary changes in the gradation of the mix to eliminate segregation of the mix. The lower surface shall not have honey-combing and the aggregates shall not be held loosely at the edges.

601.8.4 The main work shall not start until the trial length has been approved by the Engineer. After approval has been given, the materials, mix proportions, moisture content, mixing, laying, compaction plant and construction procedures shall not be changed without the approval of the Engineer.

601.9 Tolerances for Surface Regularity, Level, Thickness, Density and Strength

Control of quality of materials and works shall be exercised by the Engineer in accordance with Section 900.

601.10 Traffic

No heavy commercial vehicles like trucks and buses shall be permitted on the dry lean concrete sub-base. Construction vehicles at slow speed may be permitted after 7 days of its construction with the prior approval of the Engineer.

601.11 Measurement for Payment

The unit of measurement for dry lean concrete pavement shall be in cubic metre of concrete placed, based on the net plan area for the accepted thickness shown on the drawings or as directed by the Engineer.

601.12 Rate

The Contract unit rate payable for dry lean concrete sub-base shall be for carrying out the required operations including full compensation for all labour, materials and equipment, mixing, transport, placing, compacting, finishing, curing, rectification of defective surface testing and incidentals such as trial length to complete the work as per Specifications, all royalties, fees, storage and rents where necessary and all leads and lifts.

602 CEMENT CONCRETE PAVEMENT

602.1 Scope

602.1.1 The work shall consist of construction of un-reinforced, dowel jointed, plain

cement concrete pavement in accordance with the requirements of these Specifications and in conformity with the lines, grades and cross sections shown on the drawings. The work shall include furnishing of all plant and equipment, materials and labour and performing all operations in connection with the work, as approved by the Engineer.

602.1.2 The design parameters, viz., thickness of pavement slab, grade of concrete, joint details etc. shall be as stipulated in the drawings.

602.2 Materials

602.2.1 Source of Materials

The Contractor shall indicate to the Engineer the source of all materials to be used in the concrete work with relevant test data sufficiently in advance, and the approval of the Engineer for the same shall be obtained at least 45 days before the scheduled commencement of the work in trial length. If the Contractor subsequently proposes to obtain materials from a different source during the execution of main work, he shall notify the Engineer, with relevant test data, for his approval, at least 45 days before such materials are to be used.

602.2.2 Cement

Any of the following types of cement capable of achieving the design strength may be used with prior approval of the Engineer, but preference shall be to use at least the 43 grade or higher.

S.No.	Type	Conforming to
i)	Ordinary Portland Cement 43 Grade	IS:8112
ii)	Ordinary Portland Cement 53 Grade	IS:12269
iii)	Portlant slag cement	IS:455
iv)	Portland Pozzolana Cement	IS:1489-Part I

If the soil around concrete pavement has soluble salts like sulphates in excess of 0.5 percent, the cement used shall be sulphate resistant and shall conform to IS:12330.

Cement to be used may preferably be obtained in bulk form. If cement in paper bags is proposed to be used, there shall be bag-splitters with the facility to separate pieces of paper bags and dispose them off suitably. No paper pieces shall enter the concrete mix. Bulk cement shall be stored in accordance with Clause 1014. The cement shall be subjected to acceptance test.

Fly-ash upto 20 percent by weight of cementitious material may be used in Ordinary Portland

Cement 43 and 53 Grade as part replacement of cement provided uniform blending with cement is ensured. The fly ash shall conform to IS:3812 (Part I).

Site mixing of fly ash shall be permitted only after ensuring availability of the equipments at site for uniform blending through a specific mechanised facility with automated process control like batch mix plants conforming to IS:4925 and IS:4926. Site mixing will not be allowed otherwise.

The Portland Pozzolana Cement produced in factory as per IS:1489-Part I shall not have fly-ash content more than 20 percent by weight of cementitious material. Certificate from the manufacturer to this effect shall be produced before use.

602.2.3 Chemical Admixtures

Admixtures conforming to IS:9103 and IS:6925 shall be permitted to improve workability of the concrete and/or extension of setting time, on satisfactory evidence that they will not have any adverse effect on the properties of concrete with respect to strength, volume change, durability and have no deleterious effect on steel bars. The particulars of the admixture and the quantity to be used, must be furnished to the Engineer in advance to obtain his approval before use. Satisfactory performance of the admixtures should be proved both on the laboratory concrete trial mixes and in the trial length paving. If air entraining admixture is used, the total quantity of air shall be 5±1.5 percent for 31.5 mm maximum nominal size aggregate (in air-entrained concrete as a percentage of the volume of the mix).

602.2.4 Silica Fumes

Silica fume conforming to a standard approved by the Engineer may be used as an admixture in the proportion of 3 to 10 percent of cement. Silica fume shall comply with the requirements given in IS:15388-2003, IS:456-2000, IRC:SP:76 and IRC:44-2008.

602.2.5 Fibres

Fibres may be used subject to the provision in the design/approval by the Engineer to reduce the shrinkage cracking and post-cracking. The fibres may be steel fibre as per IRC:SP:46 or polymeric Synthetic fibres within the following range of specifications:

Effective Diameter	10 micron – 100 micron
Length	6-48 mm
Specific gravity	more than 1.0
Suggested dosage	0.6-2.0 kg/cu.m (0.2 - 0.6% by weight of cement in mix) Usage will be regulated as stipulated in IRC:44/IS:456
Water absorption	less than 0.45 percent
Melting point of this fibre shall not be less than 160°C.	
The aspect ratio generally varies from 200 to 2000.	
These synthetic fibres will have good alkali and UV light resistance.	

When fibres are used, the mix shall be so designed that the slump of concrete at paving site is 25±15 mm.

602.2.6 Aggregates

602.2.6.1 Aggregates for pavement concrete shall be natural material complying with IS:383 but with a Los Angeles Abrasion Test value not exceeding 35 percent. The limits of deleterious materials shall not exceed the requirements set out in Table 600-2.

Table 600-2 : Permissible Limits of Deleterious Substances in Fine and Coarse Aggregates

S. No.	Deleterious Substance	Method of Test	Fine Aggregate Percentage by Weight, (Max)		Coarse Aggregate Percentage by Weight (Max)	
			Uncrushed	Crushed*	Uncrushed	Crushed*
(1)	(2)	(3)	(4)	(5)	(6)	(7)
i)	Coal and lignite	IS:2386 (Part II)-1963	1.0	1.0	1.0	1.0
ii)	Clay lumps	do	1.0	1.0	1.0	1.0
iii)	Mateirals finer than 75 μ IS Sieve	IS:2386 (Part I)-1963	3.0	8.0	3.0	3.0
iv)	Soft fragments	IS:2386 (Part II)-1963	–	–	3.0	–
v)	Shale	IS:2386 (Part II)-1963	1.0	–	–	–
vi)	Total of percentages of all deleterious materials (except mica) including Sl No. (i) to (v) for col 4, 6 and 7 and Sl No. (i) and (ii) for col 5 only		5.0	2.0	5.0	5.0

* Crushed aggregate at least one face fractured

Note: The presence of mica in the fine aggregate has been found to reduce considerably the durability and compressive strength of concrete and further investigations are underway to determine the extent of the deleterious effect of mica. It is advisable, therefore, to investigate the mica content of fine aggregate and make suitable allowances for the possible reduction in the strength of concrete or mortar; in cases where the stretch of the project road passes through micacious belt.

The aggregates shall be free from chert, flint, chalcedony or other silica in a form that can react with the alkalies in the cement. In addition, the total chlorides content expressed as chloride ion content shall not exceed 0.06 percent by weight and the total sulphate content expressed as sulphuric anhydride (SO_3) shall not exceed 0.25 percent by weight. In case the Engineer considers that the aggregates are not free from dirt, the same may be washed and drained for atleast 72 hours before batching, as directed by the Engineer.

602.2.6.2 Coarse Aggregates

Coarse aggregates shall consist of clean, hard, strong, dense, non-porous and durable pieces of crushed stone or crushed gravel and shall be devoid of pieces of disintegrated stone, soft, flaky, elongated, very angular or splintery pieces. The maximum size of coarse aggregate shall not exceed 31.5 mm for pavement concrete. No aggregate which has water absorption more than 2 percent shall be used in the concrete mix. The aggregates shall be tested for soundness in accordance with IS:2386 (Part-5). After 5 cycles of testing, the loss shall not be more than 12 percent if sodium sulphate solution is used or 18 percent if magnesium sulphate solution is used. The Los Angeles Abrasion value shall not exceed 35. The combined flakiness and elongation index of aggregate shall not be more than 35 percent.

602.2.6.3 Fine Aggregates

The fine aggregates shall consist of clean natural sand or crushed stone sand or a combination of the two and shall conform to IS:383. Fine aggregate shall be free from soft particles, clay, shale, loam, cemented particles, mica and organic and other foreign matter. The fine aggregates shall have a sand equivalent value of not less than 50 when tested in accordance with the requirement of IS:2720 (Part 37).

602.2.6.4 Combined Gradation of Fine and Coarse Aggregates

The combined gradation of fine and coarse aggregates shall be as per Table 600-3.

Table 600-3 : Aggregate Gradation for Pavement Quality Concrete

Sieve Designation	Percentage by Weight Passing the Sieve
31.5 mm	100
26.5 mm	85-95
19.0 mm	68-88
9.5 mm	45-65
4.75 mm	30-55
600 micron	8-30
150 micron	5-15
75 micron	0-5

602.2.7 Water

Water used for mixing and curing of concrete shall be clean and free from injurious amount of oil, salt, acid, vegetable matter or other substances harmful to the finished concrete. It shall meet the requirements stipulated in IS:456.

602.2.8 Steel for Dowels and Tie Bars

Steel shall conform to the requirements of IS:432 and IS:1786 as relevant. The dowel bars shall conform to IS:432 of Grade I. Tie bars shall be either High yield Strength Deformed bars conforming to IS:1786 and grade of Fe 500 or plain bars conforming to IS:432 of Grade I. The steel shall be coated with epoxy paint for protection against corrosion.

602.2.9 Joint Filler Board

Synthetic Joint filler board for expansion joints shall be used only at abutting structures like bridges and shall be of 20-25 mm thickness within a tolerance of ± 1.5 mm and of a firm compressible material and complying with the requirements of IS:1838, with a compressibility more than 25 percent. It shall be 25 mm less in depth than the thickness of the slab within a tolerance of ± 3 mm and provided to the full width between the side forms. It shall be in suitable lengths which shall not be less than one lane width. If two pieces are joined to make up full width, the joint shall be taped such that no slurry escapes through the joint. Holes to accommodate dowel bars shall be accurately bored or punched out to give a sliding fit on the dowel bars.

602.2.10 Joint Sealing Compound

The joint sealing compound shall be of hot poured, elastomeric type or cold polysulphide/ polyurethene/silicone type having flexibility, resistance to age hardening and durability as per IRC:57. Manufacturer's certificate shall be produced by the Contractor for establishing that the sealant is not more than six months old and stating that the sealant complies with the relevant standard mentioned below. The samples shall meet the requirements as mentioned in IRC:57.

If sealant is of hot poured type, it shall conform to

Hot applied sealant : IS:1834 or ASTM : 3406-95, as applicable

Cold poured sealants shall be one of the following :

i)	polysulphide	IS:11433 (Part I), BS:5212 (Part II)
ii)	polyurethene	BS:5212
iii)	silicone	ASTM 5893-04

602.2.11 Preformed Seals

The pre-formed joint sealing material shall be a vulcanized elastomeric compound using polychloroprene (Neoprene) as the base polymer.

The joint seal shall conform to requirements of ASTM D 2628 as given in Table 600-4.

Table 600-4 : Requirement of Preformed Seals as per ASTM D 2628

S. No.	Description	Requirements	ASTM Test Methods
1)	Tensile strength, min	13.8 MPa	D 412
2)	Elongation at break	Min. 250%	D 412
3)	Hardness, Type A durometer	55 +/-5 points	D 2240
4)	Oven aging, 70 h at 100°C Tensile strength loss	20% max	D 573
5)	Elongation loss	20% max	
6)	Hardness Change Type A durometer	0 to +10 points	D 471
7)	Oil Swell, ASTM Oil 3, 70 h at 100°C Weight Change	45% max	D 1149
8)	Ozone resistance 20 percent strain, 300 pphm in air, 70 h at 40°C	No cracks	D 2240
9)	Low temperature stiffening, 7 days at -10°C Hardness Change type A durometer	0 to +15 points	
10)	Low temperature recovery, 22h at -10°C, 50% deflection	88% min	D 2628
11)	Low temperature recovery, 22h at -29°C, 50% deflection	83% min	D 2628
12)	Low temperature recovery, 70h at -100°C, 50% deflection	85% min	D 2628
13)	Cornpression, deflection, at 80% of normal width (min)	613 N/m	D 2628

602.2.12 Storage of Materials

All materials shall be stored in accordance with the provisions of Clause 1014 of the Specifications. All efforts shall be made to store the materials in proper places so as to prevent their deterioration or contamination by foreign matter and to ensure their satisfactory quality and fitness for the work. The platform where aggregates are stock piled shall be paved and elevated from the ground atleast by 150 mm. The area shall have slope to drain off rain water. The storage space must also permit easy inspection, removal and storage of the materials. Aggregates of different sizes shall be stored in partitioned stack-yards. All such

materials even though stored in approved godowns must be subjected to acceptance test as per Clause 903 of these Specifications prior to their use.

602.3 Proportioning of Concrete

602.3.1 After approval by the Engineer of all the materials to be used in the concrete, the Contractor shall submit the mix design based on weighed proportions of all ingredients for the approval of the Engineer vide Clause 602.3.4. The mix design shall be submitted at least 30 days prior to the paving of trial length and the design shall be based on laboratory trial mixes using the approved materials and methods as per IRC:44 or IS:10262. The target mean strength for the design mix shall be determined as indicated in Clause 602.3.3.1. The mix design shall be based on the flexural strength of concrete.

602.3.2 Cement Content

When Ordinary Portland Cement (OPC) is used the quantity of cement shall not be less than 360 kg/cu.m. In case fly ash grade I (as per IS:3812) is blended at site as part replacement of cement, the quantity of fly ash shall be upto 20 percent by weight of cementitious material and the quantity of OPC in such a blend shall not be less than 310 kg/cu.m. The minimum of OPC content, in case ground granulated blast furnace slag cement blended, shall also not be less than 310 kg/m^3. If this minimum cement content is not sufficient to produce concrete of the specified strength, it shall be increased as necessary by the contractor at his own cost.

602.3.3 Concrete Strength

602.3.3.1 The characteristic flexural strength of concrete shall not be less than 4.5 MPa unless specified otherwise. Target mean flexural strength for mix design shall be more than 4.5 MPa + 1.65s, where s is standard deviation of flexural strength derived by conducting test on minimum 30 beams. While designing the mix in the laboratory, correlation between flexural and compressive strengths of concrete shall be established on the basis of at least thirty tests on specimens. However, quality control in the field shall be exercised on the basis of flexural strength. It may, however, be ensured that the materials and mix proportions remain substantially unaltered during the daily concrete production. The water content shall be the minimum required to provide the agreed workability for full compaction of the concrete to the required density as determined by the trial mixes or as approved by the Engineer and the maximum free water cement ratio shall be 0.45 when only OPC is used and 0.50 when blended cement (Portland Pozzolana Cement or Portland Slag Cement or OPC blended with fly ash or Ground Granulated Blast Furnance Slag, at site) is used.

602.3.3.2 The ratio between the 7 and 28 day strength shall be established for the mix to be used in the slab in advance, by testing pairs of beams and cubes at each stage on at least six batches of trial mix. The average strength of the 7 day cured specimens shall be divided by the average strength of the 28 day specimens for each batch, and the ratio "R' shall be determined. The ratio 'R' shall be expressed to three decimal places.

If during the construction of the trial length or during some normal working, the average value of any four consecutive 7 day test results falls below the required 7 day strength as derived from the value of 'R' then the cement content of the concrete shall, without extra payment, be increased by 5 percent by weight or by an amount agreed by the Engineer. The increased cement content shall be maintained at least until the four corresponding 28 day strengths have been assessed for in conformity with the requirements as per Clause 602.3.3.1. Whenever the cement content is increased, the concrete mix shall be adjusted to maintain the required workability.

602.3.4 Workability

602.3.4.1 The workability of the concrete at the point of placing shall be adequate for the concrete to be fully compacted and finished without undue flow. The optimum workability for the mix to suit the paving plant being used shall be determined by the Contractor and approved by the Engineer. The control of workability in the field shall be exercised by the slump test as per IS:1199.

602.3.4.2 The workability requirement at the batching and mixing plant and paving site shall be established by slump tests carried during trial paving. These requirements shall be established from season to season and also when the lead from batching and mixing plant site to the paving site changes. The workability shall be established for the type of paving equipment available. A slump value in the range of 25 ± 15 mm is reasonable for paving works but this may be modified depending upon the site requirement and got approved by the Engineer. These tests shall be carried out on every tipping truck/dumper at batching and mixing plant site and paving site initially when the work commences but subsequently the frequency can be reduced to alternate tipping trucks or as per the instructions of the Engineer.

602.3.5 Design Mix

602.3.5.1 The Contractor shall carry out laboratory trials of design mix with the materials from the approved sources to be used as per IRC:44. Trial mixes shall be made in presence of the Engineer or his representative and the design mix shall be subject to the approval of the Engineer. They shall be repeated, if necessary, until the proportions, that will produce a concrete which complies in all respects with these Specifications, and conform to the requirements of the design/drawings.

602.3.5.2 The proportions determined as a result of the laboratory trial mixes may be adjusted, if necessary, during the construction of the trial length. Thereafter, neither the materials nor the mix proportions shall be varied in any way except with the written approval of the Engineer.

602.3.5.3 Any change in the source of materials or mix proportions proposed by the Contractor during the course of work shall be assessed by making laboratory trial mixes and the construction of a further trial length of length not less than 50 m unless approval is given by the Engineer for minor adjustments like compensation for moisture content in aggregates or minor fluctuations in the grading of aggregate.

602.4 Sub-base

The cement concrete pavement shall be laid over the sub-base constructed in accordance with the relevant drawings and Specifications. It shall be ensured that the sub-base is not damaged before laying the concrete pavement. If the dry lean concrete sub-base is found damaged at some places or it has cracks wider than 10 mm, it shall be repaired with fine cement concrete (aggregate size 10 mm and down) or bituminous concrete before laying separation membrane layer.

602.5 Separation Membrane

A separation membrane shall be used between the concrete slab and the sub-base. Separation membrane shall be impermeable PVC sheet 125 micron thick transparent or white in colour laid flat with minimum creases. Before placing the separation membrane, the sub-base shall be swept clean of all the extraneous materials using air compressor. Wherever overlap of plastic sheets is necessary, the same shall be at least 300 mm and any damaged sheathing shall be replaced at the Contractor's cost. The separation membrane may be nailed to the lower layer with concrete nails. The separation membrane shall be omitted when two layers of wax-based curing compound is used.

602.6 Joints

602.6.1 The locations and type of joints shall be as shown in the drawing. Joints shall be constructed depending upon their functional requirement. The location of the joints should be transferred accurately at the site and mechanical saw cutting of joints done as per stipulated dimensions. It shall be ensured that the required depth of cut is made from edge-to-edge of the pavement. Transverse and longitudinal joints in the pavement and Dry Lean Concrete sub-base shall be staggered so that they are not coincident vertically and are at least 800 to 1000 mm and 300 to 400 mm apart respectively. Sawing of joints shall be carried out with diamond studded blades soon after the concrete has hardened to take the load of the sawing machine and crew members without damaging the texture of the pavement.

Sawing operation could start as early as 4-8 hours after laying of concrete pavement but not later than 8 to 12 hours depending upon the ambient temperature, wind velocity, relative humidity and required maturity of concrete achieved for this purpose.

When the kerb is cast integrally with the main pavement slab, the joint cutting shall also be extended to the kerb.

Where the use of maturity meter is specified, sawing should not be initiated when the compressive strength of the concrete is less than 2 MPa and should be completed before it attains the compressive strength of 7 MPa.

602.6.2 Transverse Joints

602.6.2.1 Transverse joints shall be contraction, construction and expansion joints constructed at the spacing described in the drawings. Transverse joints shall be straight within the following tolerances along the intended line of joints.

i) Deviations of the performed filler board (IS:1838) in the case of expansion joints from the intended line of the joint shall not be greater than ±10 mm.

ii) The best fit straight line through the joint grooves as constructed shall be not more than 25 mm from the intended line of the joint.

iii) Deviations of the joint groove from the best fit straight line of the joint shall not be greater than 10 mm.

iv) Transverse joints on each side of the longitudinal joint shall be in line with each other and of the same type and width. Transverse joints shall have a sealing groove which shall be sealed in compliance with Clause 602.10.

602.6.2.2 Contraction Joints

The contraction joints shall be placed transversely at pre-specified locations as per drawings/ design using dowel bars. These joints shall be cut as soon as the concrete has undergone initial hardening and is hard enough to take the load of joint sawing machine without causing damage to the slab.

Contraction joints shall consist of a mechanical sawn joint groove, 3 to 5 mm wide and one-fourth to one-third depth of the slab ± 5 mm or as stipulated in the drawings and dowel bars complying with Clause 602.6.5.

Contraction joint shall be widened subsequently to accommodate the sealant as per Clause 602.10, to dimensions shown on drawings or as per IRC:57.

602.6.2.3 Expansion Joints

The expansion joint shall consist of a joint filler board complying with Clause 602.2.9 and dowel bars complying with Clause 602.6.5 and as detailed in the drawings. The filler board shall be positioned vertically with the prefabricated joint assemblies along the line of the

joint within the tolerances given in Clause 602.6.2.1. The adjacent slabs shall be completely separated from each other by the joint filler board.

602.6.3 Transverse Construction Joint

Transverse construction joint shall be placed whenever concreting is completed after a day's work or is suspended for more than 30 minutes. These joints shall be provided at location of contraction joints using dowel bars. If sufficient concrete has not been mixed to form a slab extending upto a contraction joint, and if an interruption occurs, the concrete placed shall be removed upto the last preceding joint and disposed of. At all construction joints, steel bulk heads shall be used to retain the concrete. The surface of the concrete laid subsequently shall conform to the grade and cross sections of the previously laid pavement. When positioning of bulk head/stop-end is not possible, concreting to an additional 1 or 2 m length may be carried out to enable the movement of joint cutting machine so that joint grooves may be cut and the extra 1 or 2 m length is cut out and removed subsequently after concrete has hardened.

After minimum 14 days of curing, in case OPC cement is used and 16 days of curing when flyash or blended cement is used, the construction joint shall be widened to accommodate the sealant as per Clause 602.10 to dimensions shown on drawing or as per IRC:57.

602.6.4 Longitudinal Joint

602.6.4.1 The longitudinal joints shall be constructed by forming or by sawing as per details of the joints shown in the drawing. Sawed longitudinal joints shall be constructed when the concrete pavement placement width exceeds 4.5 m. The groove may be cut after the final set of the concrete. Joints should be sawn to at least one-third the depth of the slab ±5 mm as indicated in the drawing. The joint shall be widened subsequently to dimensions shown on the drawings.

Where adjacent lanes of pavement are constructed separately using slip form pavers or side forms, the tie bars may be bent at right angles against the vertical face/ side of the first lane constructed and straightened before placing concrete in the adjacent lane. Broken or damaged tie bars shall be repaired or replaced as required.

The groove for sealant shall be cut in the pavement lane placed later.

602.6.4.2 Tie Bars

Tie bars shall be provided at the longitudinal joints as per dimensions and spacing shown in the drawing and in accordance with Clause 602.6.6. The direction of the tie bars at curves shall be radial in the direction of the radius.

602.6.5 Dowel Bars

602.6.5.1 Dowel bars shall be mild steel rounds in accordance with Clause 602.2.8 with details/dimensions as indicated in the drawings and free from oil, dirt, loose rust or scale. They shall be straight, free of irregularities and burring restricting slippage in the concrete. The sliding ends shall be sawn or cropped cleanly with no protrusions outside the normal diameter of the bar. Any protrusions shall be removed by grinding the ends of the dowel bars. The dowel bar shall be supported on cradles/dowel chairs in pre-fabricated joint assemblies positioned prior to the construction of the slabs or mechanically inserted with vibration into the plastic concrete by a method which ensures correct placement of the bars besides full re-compaction of the concrete around the dowel bars.

602.6.5.2 Unless shown otherwise on the drawings, dowel bars shall be positioned at mid depth of the slab within a tolerance of ±20 mm, and centered equally about intended lines of the joint within a tolerance of ±25 mm. They shall be aligned parallel to the finished surface of the slab and to the centre line of the carriageway and to each other within tolerances given here-in-under, the compliance of which shall be checked as per Clause 602.11.7.

i) For bars supported on cradles prior to the laying of the slab:

a) All bars in a joint shall be within ±2 mm per 300 mm length of bar

b) 2/3rd of the number of bars shall be within ±3 mm per 500 mm length of bar

c) No bar shall differ in alignment from an adjoining bar by more than 3 mm per 300 mm length of bar in either the horizontal or vertical plane

d) Cradles supporting dowel bar shall not extend across the line of joint i.e. no steel bar of the cradle assembly shall be continuous across the joint.

ii) For all bars inserted after laying of the slab except those inserted by a Dowel Bar Inserter the tolerance for alignment may be twice as indicated in (i) above.

The transverse joints at curves shall be radial in the direction of the radius.

602.6.5.3 Dowel bars, supported on cradles in assemblies, when subject to a load of 110 N applied at either end and in either the vertical or horizontal direction (upwards and downwards and in both directions horizontally) shall conform to be within the limits given in Clause 602.6.5.2.

602.6.5.4 The assembly of dowel bars and supporting cradles, including the joint filler

board in the case of expansion joints, shall have the following degree of rigidity when fixed in position:-

i) For expansion joints, the deflection of the top edge of the filler board shall be not greater than 13 mm, when a load of 1.3 kN is applied perpendicular to the vertical face of the joint filler board and distributed over a length of 600 mm by means of a bar or timber packing, at mid depth and midway between individual fixings, or 300 mm from either end of any length of filler board, if a continuous fixing is used. The residual deflection after load shall be not more than 3 mm.

ii) The fixings for joint assembly shall not fail under 1.3 kN load and shall fail before the load reaches 2.6 kN when applied over a length of 600 mm by means of a bar or timber packing placed as near to the level of the line of fixings as practicable.

iii) Fixings shall be deemed to fail when there is displacement of the assemblies by more than 3 mm with any form of fixing, under the test load. The displacement shall be measured at the nearest part of the assembly to the centre of the bar or timber packing.

602.6.5.5 Dowel bars in the contraction joints, construction joints and expansion joints shall be covered by a thin plastic sheath. The thickness of the sheath shall not exceed 0.5 mm and shall be tightly fitted on the bar for at least two-thirds of the length from one end for dowel bars in contraction/construction joints and half the length plus 50 mm for expansion joints. The sheathed bar shall comply with the following pull-out tests:

Four bars shall be taken at random from stock and without any special preparation shall be covered by sheaths as required in this Clause. The ends of the dowel bars which have been sheathed shall be cast centrally into concrete specimens 150 mm x 150 mm x 600 mm, made of the same mix proportions to be used in the pavement, but with a maximum nominal aggregate size of 20 mm and cured in accordance with IS:516. At 7 days a tensile load shall be applied to achieve a movement of the bar of at least 0.25 mm. The average bond stress to achieve this movement shall not be greater than 0.14 MPa.

602.6.5.6 For expansion joints, a closely fitting cap 100 mm long consisting of waterproofed cardboard or an approved synthetic material like PVC or GI pipe shall be placed over the sheathed end of each dowel bar. An expansion space (about 25 mm) at least equal in length to the thickness of the joint filler board shall be formed between the end of the cap and the end of the dowel bar by using compressible sponge. To block the entry of cement slurry into the annular space between the sheathing and dowel bar shall be taped around its mouth.

602.6.6 Tie Bars

602.6.6.1 Tie bars in longitudinal joints shall be deformed steel bars of strength 500 MPa complying with IS:1786 and in accordance with the requirements given in this Clause. The bars shall be free from oil, dirt, loose rust and scale.

602.6.6.2 Tie bars projecting across the longitudinal joint shall be protected from corrosion for 75 mm on each side of the joint by a protective coating of bituminous paint with the approval of the Engineer. The coating shall be dry when the tie bars are used. In the case of coastal region and high rainfall areas, tie bars shall be epoxy coated in their full length as per IS:13620.

602.6.6.3 Tie bars in longitudinal joints shall be made up into rigid assemblies with adequate supports and fixings to remain firmly in position during the construction of the slab. Alternatively, tie bars at longitudinal joints may be mechanically or manually inserted into the plastic concrete from above by vibration using a method which ensures correct placements of the bars and recompaction of the concrete around the tie bars.

602.6.6.4 Tie bars shall be positioned to remain in the middle from the top or within the upper middle third of the slab depth as indicated in the drawings and approximately parallel to the surface and approximately perpendicular to the line of the joint, with the centre of each bar on the intended line of the joints within a tolerance of ±50 mm, and with a minimum cover of 30 mm below the joint groove. Spacing of tie bars on curves of radius less than 360 m shall not be less than 350 mm.

602.6.6.5 To check the position of the tie bars, one metre length, 0.5 m on either side of the longitudinal joint shall be opened when the concrete is green (within 20 to 30 minutes). The pit shall be refilled with the fresh concrete of same mix after checking.

602.7 Weather and Seasonal Limitations

602.7.1 Concreting during Monsoon Months

Concreting should be avoided during rainy season. However, when concrete is being placed during monsoon months and when it may be expected to rain, sufficient supply of tarpaulin or other waterproof cloth shall be provided along the line of the work. Any time when it rains, all freshly laid concrete which had not been covered for curing purposes shall be adequately protected. Any concrete damaged by rain shall be removed and replaced. If the damage is limited to texture, it shall be retextured in accordance with the directions of the Engineer.

602.7.2 Temperature Limitation

No concreting shall be done when the temperature of the concrete reaching the paving site is above 30°C. Besides, in adverse conditions like high temperature, low relative humidity, excessive wind velocity, imminence of rains etc., tents on mobile trusses may be provided over the freshly laid concrete for a minimum period of 3 hours as directed by the Engineer. To bring down the temperature, if necessary, chilled water or ice flakes should be made use of. When the ambient temperature is more than 35°C, no concreting shall be permitted. The ice

flakes should not be manufactured from chlorinated water. Generally the rate of evaporation of water shall not exceed 1 kg/sqm/hour as per IRC:15.

No concreting shall be done when the concrete temperature is below 5°C and the temperature is further falling.

602.8 Fixed Form Paving

602.8.1 Side Forms and Rails

These shall be provided in case of fixed form paving. All side forms shall be of mild steel of depth equal to the thickness of pavement or slightly less to accommodate the surface irregularity of the sub-base. The forms can be placed in series of steel packing plates or shims to take care of irregularity of sub-base. They shall be sufficiently robust and rigid to support the weight and pressure caused by a paving equipment. Side forms for use with wheeled paving machines shall incorporate metal rails firmly fixed at a constant height below the top of the forms. The forms and rails shall be firmly secured in position by not less than 3 stakes/pins for every 3 m length so as to prevent movement in any direction. Forms and rails shall be straight within a tolerance of 3 mm in 3 m and when in place shall not settle in excess of 1.5 mm in 3 m while paving is being done. Forms shall be cleaned and oiled immediately before each use. The forms shall be bedded on a continuous bed of low moisture content lean cement mortar or concrete and set to the line and levels shown on the drawings within tolerances ±10 mm and ±3 mm respectively. The bedding shall not extend under the slab and there shall be no vertical step between adjacent forms of more than 3 mm. The forms shall be got inspected by the Engineer for his approval 12 hours before construction of the slab and shall not be removed until at least 12 hours afterwards. No concreting shall commence till formwork has been approved by the Engineer.

602.8.2 At all times sufficient forms shall be used and set to the required alignment for at least 300 m length of pavement immediately in advance of the paving operations, or the anticipated length of pavement to be laid within the next 24 hours whichever is more.

602.8.3 Slip Form Paving

602.8.3.1 Use of Guidewires

Where slip form paving is proposed, a guidewire shall be provided along both sides of the slab. Each guidewire shall be at a constant height above and parallel to the required edges of the slab as described in the contract drawing within a vertical tolerance of ±3 mm. Additionally, one of the wires shall be kept at a constant horizontal distance from the required edge of the pavement as indicated in the contract drawing within a lateral tolerance of ±10 mm.

602.8.3.2 The guidewires shall be supported on stakes 5–6 m apart by connectors capable of fine horizontal and vertical adjustment. The guidewire shall be tensioned on the stakes so that a 500 gm weight shall produce a deflection of not more than 20 mm when suspended at the mid point between any pair of stakes. The ends of the guidewires shall be anchored to fixing point or winch and not on the stakes. On the curves, the stakes shall be fixed at not more than 3 m centre-to-centre.

602.8.3.3 The stakes shall be positioned and hammered into the ground and the connectors will be maintained at their correct height and alignment from 12 hours on the day before concreting takes place till after finishing of texturing and spraying of curing compound on the concrete.

However, the guidewire shall be erected and tensioned on the connectors at any section for at least 2 hours before concreting that section.

602.8.3.4 The Contractor shall submit to the Engineer for his approval of line and level, the stakes and connectors which are ready for use in the length of road to be constructed next day. Such approval shall be obtained atleast 12 hours before commencement of paving operation. Any deficiencies noted by the Engineer shall be rectified by the Contractor who shall then re-apply for approval of the affected stakes. Work shall not proceed until the Engineer has given his approval. It shall be ensured that the stakes and guidewires are not affected by the construction equipment when concreting is in progress.

602.9 Construction

602.9.1 General

A systems approach may be adopted for construction of the pavement, and the Method Statement for carrying out the work, detailing all the activities, indication of time-cycle, equipment, personnel etc., shall be got approved from the Engineer before the commencement of the work. This shall include the type, capacity and make of the batching and mixing plant besides the hauling arrangement and paving equipment. The capacity of paving equipment, batching plant as well as all the ancillary equipment shall be adequate for a paving rate of atleast 500 m in one day. The paving speed of slip-form paver shall not be less than 1.0 m per minute. The concreting should proceed continuously without stops and starts.

602.9.2 Batching and Mixing

Batching and mixing of the concrete shall be done at a central batching and mixing plant with automatic controls, located at a suitable place which takes into account sufficient space for stockpiling of cement, aggregates and stationary water tanks. This shall be located at an approved distance, duly considering the properties of the mix and the transporting arrangements available with the Contractor.

602.9.3 Equipment for Proportioning of Materials and Paving

602.9.3.1 Proportioning of materials shall be done in the batching plant by weight, each type of material being weighed separately. The cement from the bulk stock may be weighed separately from the aggregates. Water shall be measured by volume. Specified percentage of plasticizer in volume will be added by weight of cement. Wherever properly graded aggregate of uniform quality cannot be maintained as envisaged in the mix design, the grading of aggregates shall be controlled by appropriate blending techniques. The capacity of batching and mixing plant shall be at least 25 percent higher than the proposed capacity of the laying/paving equipment.

602.9.3.2 Batching Plant and Equipment :

1) **General :** The batching plant shall include minimum four bins, weighing hoppers, and scales for the fine aggregates and for each size of coarse aggregate. If cement is used in bulk, a separate scale for cement shall be included. There shall be a separate bin for flyash, if this additive is specified. The weighing hoppers shall be properly sealed and vented to preclude dust during operation. Approved safety devices shall be provided and maintained for the protection of all personnel engaged in plant operation, inspection and testing. The batch plant shall be equipped with a suitable non-resettable batch counter which will correctly indicate the number of batches proportioned. A continuous type of mixing plant can also be used provided the ingredients are weighed through electronic sensors before feeding.

2) **Automatic weighing devices :** Batching plant shall be equipped to proportion aggregates and bulk cement by means of automatic weighing devices using load cells. The weighing devices shall have an accuracy within ±1% in respect of quantity of cement, admixtures and water and ±2% in respect of aggregates and the accuracy shall be checked at least once a month.

3) **Mixer :** Mixers shall be pan type, reversible type or any other mixer capable of combining the aggregates, cement, and water into a thoroughly mixed and uniform mass within the specified mixing period, and of discharging the mix, without segregation. Each stationary mixer shall be equipped with an approved timing device which will automatically lock the discharge lever when the drum has been charged and release it at the end of the mixing period. The device shall be equipped with a bell or other suitable warning device adjusted to give a clearly audible signal each time the lock is released. In case of failure of the timing device, the mixer may be used for the balance of the day while it is being repaired, provided that each batch is mixed in 90 seconds or as per the manufacturer's recommendation. The mixer shall be equipped with a

suitable non-resettable batch counter which shall correctly indicate the number of batches mixed.

The mixer shall be cleaned at suitable intervals. The pick-up and throw-over blades in the drum or drums shall be repaired or replaced when they are worn down 20 mm or more. The Contractor shall (1) have available at the job site a copy of the manufacturer's design, showing dimensions and arrangements of blades in reference to original height and depth, or (2) provide permanent marks on blade to show points of 20 mm wear from new conditions. Drilled holes of 5 mm diameter near each end and at midpoint of each blade are recommended. Batching Plant shall be calibrated in the beginning and thereafter at suitable interval not exceeding 1 month.

4) **Control cabin :** An air-conditioned centralized computer control cabin shall be provided for automatic operation of the equipment.

5) The design features of the batching plant should be such that it can be shifted quickly.

602.9.3.3 Paving Equipment

The concrete shall be placed with an approved fixed form or slip form paver with independent units designed to (i) spread, (ii) consolidate, screed and float-finish, (iii) texture and cure the freshly placed concrete in one complete pass of the machine in such a manner that a minimum of hand finishing will be necessary and so as to provide a dense and homogeneous pavement in conformity with the plans and Specifications. The paver shall be equipped with electronic sensor controls to control the line and grade from either one side or both sides of the machine.

Vibrators shall operate at a frequency of 8000-10000 impulses per minute under load at a maximum spacing of 600 mm. The variable vibration setting shall be provided in the machine.

602.9.3.4 Concrete Saw

The Contractor shall provide adequate number of concrete saws with sufficient number of diamond-edge saw blades. The saw machine shall be either electric or petrol/diesel driven type. A water tank with flexible hose and pump shall be made available for this activity on priority basis. The Contractor shall have at least one standby saw in good working condition. The concreting work shall not commence if the saws are not in working condition.

602.9.4 Hauling and Placing of Concrete

602.9.4.1 Freshly mixed concrete from the central batching and mixing plant shall be

transported to the paver site by means of tipping trucks or transit mixers of sufficient capacity and approved design in sufficient numbers to ensure a constant supply of concrete. Covers shall be used for protection of concrete against the weather. While loading the concrete truck shall be moved back and forth under the discharge chute to prevent segregation. The tipping trucks shall be capable of maintaining the mixed concrete in a homogeneous state and discharging the same without segregation and loss of cement slurry. The feeding to the paver is to be regulated in such a way that the paving is done in an uninterrupted manner with a uniform speed throughout the day's work. Tipping trucks shall be washed at a regular frequency as prescribed by the Engineer to ensure that no left-over mix of previous loading remains stuck.

602.9.4.2 Placing of Concrete

The total time taken from the addition of the water to the mix, until the completion of the surface finishing and texturing shall not exceed 120 minutes when concrete temperature is less than 25°C and 90 minutes when the concrete temperature is between 25°C and 30°C. When the time between mixing and laying exceed these values, the concrete shall be rejected and removed from the site. Tipping trucks delivering concrete shall normally not run on plastic sheathing nor shall they run on completed slabs until after 28 days of placing the concrete.

The placing of concrete in front of the PQC paver should preferably be from the side placer to avoid damage to DLC by concrete tipping trucks. In case of unavoidable situation, truck supplying concrete to the paver may be allowed to ply on the DLC with the approval of the Engineer. The paver shall be capable of paving the carriageway as shown in the drawings, in a single pass and lift.

602.9.4.3 Where fixed form pavers are to be used, forms shall be fixed in advance as per Clause 602.8. Before any paving is done, the site shall be shown to the Engineer, in order to verify the arrangement for paving besides placing of dowels, tie-bars etc., as per the relevant Clauses of these Specifications. The mixing and placing of concrete shall progress only at such a rate as to permit proper finishing, protecting and curing of the concrete in the pavement.

602.9.4.4 In areas inaccessible to paving equipment, the pavement shall be constructed using side forms, as per Clause 602.9.7.

602.9.4.5 In all cases, the temperature of the concrete shall be measured at the point of discharge from the delivery vehicle.

602.9.4.6 The addition of water to the surface of the concrete to facilitate the finishing operations will not be permitted except with the approval of the Engineer when it shall be applied as a mist by means of approved equipment.

602.9.4.7 If considered necessary by the Engineer, the paving machines shall be provided with approved covers to protect the surface of the slab under construction from direct sunlight and rain or hot wind.

602.9.4.8 While the concrete is still plastic, its surface shall be textured by brush or tines as per the instructions of the engineer in compliance with Clause 602.9.11. The surface and edges of the slab shall be cured by the application of a sprayed liquid curing membrane in compliance with Clause 602.9.12. After the surface texturing, but before the curing compound is applied, the concrete slab shall be marked with the chainage at every 100 m interval by embossing.

602.9.4.9 As soon as the side forms are removed, edges of the slabs shall be corrected wherever irregularities have occurred by using fine concrete composed of 1:1:2, cement : sand : coarse agg (10 mm down) with water cement ratio not more than 0.4 under the supervision of the Engineer.

602.9.4.10 If the requirement of Clause 902.4. for surface regularity fails to be achieved on two consecutive working days, then normal working shall cease until the cause of the excessive irregularity has been identified and remedied.

602.9.5 Construction by Slip Form Paver

602.9.5.1 The slip form paving train shall consist of a power machine which spreads, compacts and finishes the concrete in a continuous operation. The slip form paving machine shall compact the concrete by internal vibration and shape it between the side forms with either a conforming plate or by vibrating and oscillating finishing beams. The concrete shall be deposited without segregation in front of slip form paver across the whole width and to a height which at all times is in excess of the required surcharge. The deposited concrete shall be struck off to the necessary average and differential surcharge by means of the strike off plate or a screw auger device extending across the whole width of the slab. The equipment for striking-off the concrete shall be capable of being rapidly adjusted for changes of the average and differential surcharge necessitated by change in slab thickness or crossfall.

602.9.5.2 The level of the conforming plate and finishing beams shall be controlled automatically from the guide wires installed as per Clause 602.8 by sensors attached at the four corners of the slip form paving machine. The alignment of the paver shall be controlled automatically from the guide wire by at least one set of sensors attached to the paver. The alignment and level of ancillary machines for finishing, texturing and curing of the concrete shall be automatically controlled relative to the guide wire or to the surface and edge of the slab.

602.9.5.3 Slip-form paving machines shall have vibrators of variable output, with a

maximum energy output of not less than 2.5 KW per metre width of slab per 300 mm depth of slab for a laying speed upto 1.5 m per minute. The machines shall be of sufficient mass to provide adequate reaction during spreading and paving operations on the traction units to maintain forward movements during the placing of concrete in all situations. Normal paving speed shall be maintained as per Clause 602.9.1.

602.9.5.4 If the edges of the slip formed slab slump to the extent that the surface of the top edge of the slab does not comply with the requirements of Clause 902.3, the work shall be stopped until such time as the Contractor can demonstrate his ability to slip form the edges to the required levels. The deficient edge shall be temporarily supported by a side form and the thickness deficiency shall be made good by adding fresh concrete to the newly formed edge and compacting.

602.9.5.5 Slip-form pavers with adequate width to pave the entire carriageway width in one go shall be employed unless specified in the Contract. In situations where full-width paving is not possible, paving in part widths may be permitted by the Engineer. Paving in part will be avoided, except in unavoidable circumstances. In case of part width paving, care shall be taken to ensure that while laying the next lane, bond between the remaining half length of tie bar or subsequently inserted tie bars and the newly laid concrete is adequately developed. Care shall be taken to avoid damage to the previous lane.

602.9.5.6 In case paving in separate lanes is allowed, work on the adjacent lane shall be permitted when the previously paved lane is cured for at least 14 days and is in a position to bear the weight of paving machine. When the wheels or crawler tracks are to ply on the already paved surface, necessary precautions shall be taken by placing protective pads of rubber or similar material so that texture is not damaged. The wheel or track shall be reasonably away from the edge to avoid damage to the previously laid slab.

602.9.5.7 Tube Floating

Upon the instructions of the Engineer, Contractor shall scrape the concrete surface when in plastic state with a 3 m long tube float fixed with a long and stable handle before texturing. Tube float shall be of an alloy steel tube of 50 to 60 mm diameter with a long and stable handle. The length of tube float shall preferably be longer than half the length of slab i.e., half the distance between two transverse contraction joints. This operation shall be done to minimise surface irregularity caused due to varied causes like frequent stoppages of work, surface deformation due to plastic flow etc. The tube float shall be placed at the centre of the slab parallel to longitudinal joint and pulled slowly and uniformly towards the edges. After the use of float tube, it shall be frequently cleaned before further use. The slurry removed shall be discarded. This activity shall be advanced laterally by providing an overlap of half the length of tube float. The removal of the cement slurry from the surface shall be sufficient enough such that the texture is formed on a firm surface and is more durable. This operation, however, shall be carried out after removing bleeding water.

602.9.6 Construction by Fixed Form Paver

602.9.6.1 The fixed form paving train shall consist of separate powered machines which spread, compact and finish the concrete in a continuous operation.

602.9.6.2 The concrete shall be discharged without segregation into a hopper spreader which is equipped with means for controlling its rate of deposition on to the sub-base. The spreader shall be operated to strike off concrete upto a level requiring a small amount of cutting down by the distributor of the spreader. The distributor of spreader shall strike off the concrete to the surcharge adequate to ensure that the vibratory compactor thoroughly compacts the layer. If necessary, poker vibrators shall be used adjacent to the side forms and edges of the previously constructed slab. The vibratory compactor shall be set to strike off the surface slightly high so that it is cut down to the required level by the oscillating beam. The machine shall be capable of being rapidly adjusted for changes in average and differential surcharge necessitated by changes in slab thickness or crossfall. The final finisher shall be able to finish the surface to the required level and smoothness as specified, care being taken to avoid bringing up of excessive mortar to the surface by over working.

602.9.7 Semi-mechanised Construction

Areas in which hand-guided methods of construction become indispensable shall be got approved by the Engineer in writing in advance. Such work may be permitted only in restricted areas in small lengths. Work shall be carried out by skilled personnel as per methods approved by the Engineer. The acceptance criteria regarding level, thickness, surface regularity, texture, finish, strength, of concrete and all other quality control measures shall be the same as in the case of machine laid work. Guidelines on the use of plants, equipment, tools, hauling of mix, compaction floating, straight edging, texturing, edging etc. shall be as per IRC:15.

602.9.8 Transition Slabs

At the interface of rigid and flexible pavement, at least 3 m long reinforced buried slab shall be provided to give a long lasting joint at the interface. The details shall be as given in IRC:15.

602.9.9 Anchor Beam and Terminal Slab Beam Adjoining Bridge Structures

RCC anchor beams shall be provided in the terminal slab adjoining bridge structures as per drawings and IRC:15.

602.9.10 The Treatment of Concrete Pavement on Culverts

The concrete pavement shall be taken over the culverts. At both ends of the culvert slab, a contraction joint shall be provided in the concrete pavement. Nominal reinforcement of

10 mm dia bars at 150 mm spacing in both directions shall be provided at 50 mm below the top of the slab. The reinforcement shall be stopped 50 mm short of the contraction joint. Such reinforcement shall also be provided in the next slab panel on either side.

602.9.11 Surface Texture

602.9.11.1 Tining

After final floating and finishing of the slab and before application of the liquid curing membrane, the surface of concrete slabs shall be textured either in the transverse direction (i.e., at right angles to the longitudinal axis of the road) or in longitudinal direction (i.e., parallel to the centreline of the roadway). The texturing shall be done by tining the finished concrete surface by using rectangular steel tines. A beam or a bridge mounted with steel tines shall be equipped and operated with automatic sensing and control devices from main paver or auxiliary unit. The tining unit shall have facility for adjustment of the download pressure on the tines as necessary to produce the desired finish. The tining rakes shall be cleaned often to remove snots of slurry. The tines shall be inspected daily and all the damaged and bent tines shall be replaced before commencing texturing. Tined grooves shall be 3 mm wide and 3 to 4 mm deep. Before commencing texturing, the bleeding water, if any, shall be removed and texturing shall be done on a firm surface. The measurement of texture depth shall be done as per Clause 602.12.

a) **Transverse tining :** When the texturing is specified in transverse direction, a beam of at least 3 m length mounted with tines shall be moved in transverse direction to produce the texture. The grooves produced shall be at random spacing of grooves but uniform in width and depth. The spacing shall conform to a pattern shown below:

Random spacing in mm

10	14	16	11	10	13	15	16	11	10	21	13	10

The above pattern shall be repeated. Texturing shall be done at the right time such that the grooves after forming shall not close and they shall not get roughened. Swerving of groove patterns will not be permitted. The completed textured surface shall be uniform in appearance.

b) **Longitudinal tining :** Longitudinal tining shall be done, if specified in the Contract. The texturing bridge shall be wide enough to cover the entire width of the carriageway but within 75 mm from the pavement edge. The centre to centre spacing between the tines shall be 18 to 21 mm. The width of tine texture shall be 3 mm and depth shall be 3 to 4 mm.

602.9.11.2 Brush Texturing

Alternatively on the instructions of the Engineer, the brush texturing shall be applied. The brushed surface texture shall be applied evenly across the slab in one direction by the use of a wire brush not less than 450 mm wide but wider brushes normally of 3 m length are preferred. The brush shall be made of 32 gauge tape wires grouped together in tufts placed at 10 mm centres. The tufts shall contain an average of 14 wires and initially be 100 mm long. The brush shall have two rows of tufts. The rows shall be 20 mm apart and the tufts in one row shall be opposite the centre of the gap between tufts in the other row. The brush shall be replaced when the shortest tuft wears down to 90 mm long.

The texture depth shall be determined by the Sand Patch Test as described in the Clause 602.12. This test shall be performed at least once for each day's paving and wherever the Engineer considers it necessary at times after construction as under:

Five individual measurements of the texture depth shall be taken at least 2 m apart anywhere along a diagonal line across a lane width between points 50 m apart along the pavement. No measurement shall be taken within 300 mm of the longitudinal edges of a concrete slab constructed in one pass.

Texture depths shall not be less than the minimum required depth when measurements are taken as given in Table 600-5 nor greater than an average of 1.25 mm.

Table 600-5 : Texture Depth

Time of Test		Number of Measurements	Required Texture Depth (mm)	
			Specified Value	Tolerance
1)	Between 24 hours and 7 days after the construction of the slab or until the slab is first used by vehicles	An average of 5 measurements	1.00	±0.25
2)	Not later than 6 weeks before the road is opened to traffic	An average of 5 measurements	1.00	+0.25 -0.35

After the application of the brushed texture, the surface of the slab shall have a uniform appearance.

Where the texture depth requirements are found to be deficient, the Contractor shall make good the texture across the full lane width over the length directed by the Engineer, by retexturing the hardened concrete surface in an approved manner.

602.9.12 Curing

602.9.12.1 Immediately after the surface texturing, the surface and sides of the slab shall be cured by the application of approved resin-based aluminized reflective curing compound which hardens into an impervious film or membrane with the help of mechanical sprayer.

602.9.12.2 The curing compound shall not react chemically with the concrete and the film or membrane shall not crack, peel or disintegrate within three weeks of application. Immediately prior to use, the curing compound shall be thoroughly agitated in its containers. The rate of spread shall be in accordance with the manufacturer's instructions checked during the construction of the trial length and subsequently whenever required by the Engineer. The mechanical sprayer shall incorporate an efficient mechanical device for continuous agitation and mixing of the compound during spraying. The curing compound shall be sprayed in two applications to ensure uniform spread.

Curing compounds shall contain sufficient flake aluminum in finely divided dispersion to produce a complete coverage of the sprayed surface with a metallic finish. The compound shall become stable and impervious to evaporation of water from the surface of the concrete within 60 minutes of application and shall be of approved type. The curing compounds shall have a water retention efficiency index not less than 90 percent in accordance with BS Specification No. 7542 or as per ASTM C-309-81 Type 2.

602.9.12.3 In addition to spraying of curing compound, the fresh concrete surface shall be protected for at least 3 hours by covering the finished concrete pavement with tents mounted on mobile trusses as described in Clause 602.7.2, during adverse weather conditions as directed by the Engineer. After three hours, the pavement shall be covered by moist hessian laid in two layers and the same shall then be kept damp for a minimum period of 14 days after which time the hessian may be removed. The hessian shall be kept continuously moist. All damaged/torn hessian shall be removed and replaced by new hessian on a regular basis.

602.9.12.4 The Contractor shall be liable at his cost to replace any concrete damaged as a result of incomplete curing or cracked on a line other than that of a joint as per procedure in IRC:SP:83.

602.10 Preparation and Sealing of Joint Grooves

602.10.1 General

All joints shall be sealed using sealants described in Clause 602.2.10.

602.10.2 Preparation of Joint Grooves for Sealing

602.10.2.1 Grooves are saw cut in the first instance just to provide minimum width (3-5 mm) to facilitate development of crack at joint locations, as shown in the drawing.

Subsequently before sealing, grooves are widened by sawing as per the dimensions in the drawing. Dimension of the grooves shall be controlled by depth/width gauge.

602.10.2.2 If rough arrises develop when grooves are made, they shall be ground to provide a chamfer approximately 5 mm wide. If the groove is at an angle upto 10° from the perpendicular to the surface, the overhanging edge of the groove shall be sawn or ground perpendicular. If spalling occurs or the angle of the former is greater than 10 degree, the

joint sealing groove shall be sawn wider and perpendicular to the surface to encompass the defects upto a maximum width, including any chamfer, of 20 mm for transverse joints and 10 mm for longitudinal joints. If the spalling cannot be so eliminated then the arises shall be repaired by an approved thin bonded arrises repair using cementitious/epoxy mortar materials.

602.10.2.3 All grooves shall be cleaned of any dirt or loose material by air blasting with filtered, oil-free compressed air. The Engineer shall instruct cleaning by pressurized water jets. Depending upon the requirement of the sealant manufacturer, the sides of the grooves shall be sand blasted to increase the bondage between sealant and concrete.

602.10.2.4 The groove shall be cleaned and dried at the time of priming and sealing. If sand blasting is recommended by the supplier, the same shall be carried out.

602.10.2.5 Before sealing the temporary seal provided for blocking the ingress of dirt, soil etc., shall be removed. A highly compressible heat resistant paper-backed debonding strip as per drawing shall be inserted in the groove to serve the purpose of breaking the bond between sealant and the bottom of the groove and to plug the joint groove so that the sealant may not leak through the cracks. The width of debonding strip shall be more than the joint groove width so that it is held tightly in the groove. In the case of longitudinal joints, heat resistant tapes may be inserted to block the leakage through bottom of the joint where hot poured sealant is used. When cold poured sealant is used a debonding tape of 1.0-2.0 mm thickness and 6 to 8 mm width shall be inserted to plug the groove so that the sealant does not enter in the initially cut groove.

602.10.3 Sealing with Sealants

602.10.3.1 When sealants are applied, an appropriate primer shall also be used if recommended by the manufacturer and it shall be applied in accordance with his instructions. The sealant shall be applied within the minimum and maximum drying times of the primer recommended by the manufacturer. Priming and sealing with applied sealants shall not be carried out when the naturally occurring temperature in the joint groove to be sealed, is below 7°C.

602.10.3.2 If hot applied sealant is used it shall be heated and applied from a thermostatically controlled, indirectly heated preferably with oil jacketed melter and pourer having recirculating pump and extruder. For large road projects, sealant shall be applied with extruder having flexible hose and nozzle. The sealant shall not be heated to a temperature higher than the safe heating temperature and not for a period longer than the safe heating period, as specified by the manufacturer. The dispenser shall be cleaned out at the end of each day in accordance with the manufacturer's recommendations and reheated material shall not be used. The Movement Accomodation Factor of the sealant shall be more than 10 percent.

602.10.3.3 Cold applied sealants with chemical formulation like polysulphide/ polyurethene/ silicone as per IRC:57 shall be used These shall be mixed and applied within

the time limit specified by the manufacturer. If primers are recommended they shall be applied neatly with an appropriate brush. The Movement Accomodation Factor shall be more than 25 percent.

602.10.3.4 The sealants applied at contraction phase of the slabs would result in bulging of the sealant over and above the slab. Therefore, the Contractor in consultation with the Engineer, shall establish the right temperature and time for applying the sealant. Thermometer shall be hung on a pole at the site for facilitating control during the sealing operation.

602.10.3.5 Sealant shall be applied, slightly to a lower level than the slab with a tolerance of 3 ± 1 mm.

602.10.3.6 During sealing operation, it shall be seen that no air bubbles are introduced in the sealant either by vapours or by the sealing process. The sealant after pouring, shall be allowed to cure for 7 days or for a period as per instructions of manufacturers.

602.11 Trial Length

602.11.1 The trial shall be constructed at least one month in advance of the proposed start of concrete paving work. At least one month prior to the construction of the trial length, the Contractor shall submit for the Engineer's approval a detailed method statement giving description of the proposed materials, plant, equipment and construction methods. All the major equipments like paving train, batching plant, tipping trucks etc., proposed in the construction are to be approved by the Engineer before their procurement. No trials of new materials, plant, equipment or construction methods, nor any development of them shall be permitted either during the construction of trial length or in any subsequent paving work, unless they form part of further trials. The trial lengths shall be constructed away from the carriageway.

602.11.2 The Contractor shall demonstrate the materials, plant, equipment and methods of construction that are proposed for concrete paving, by first constructing a trial length of slab, at least 100 m long for mechanised construction and at least 50 m long for hand guided methods. The width of the trial section shall be the full carriageway width as shown in the drawings. If the first trial is unsatisfactory, the Contractor shall have to demonstrate his capability to satisfactorily construct the pavement in subsequent trials.

602.11.3 The trial length shall be constructed in two parts over a period comprising at least part of two separate working days, with a minimum of 50 m constructed each day for mechanised construction and a minimum of 25 m on each day for hand guided construction. The trial length shall be constructed at a paving rate which is proposed for the main work.

602.11.4 Transverse joints including expansion joint and longitudinal joint that are proposed in the main work shall be constructed and assessed in the trial length.

602.11.5 The trial length shall comply with the Specifications in all respects including the test requirement of Table 900-6 with the following additions.

602.11.5.1 Surface Levels and Regularity

a) In checking for compliance with Clause 902.3 the levels shall be taken at intervals at the locations specified in this Clause along any line or lines parallel to the longitudinal centre line of the trial length.

b) The maximum number of permitted irregularities of pavement surface shall comply with the requirements of Clause 902.4. Shorter trial lengths shall be assessed pro-rata based on values for a 300 m length.

602.11.5.2 Joints

a) Alignment of dowel bars shall be inspected in any two consecutive transverse joints in a trial length construction by removing the fresh concrete in a width of 0.5 m on either side of the joint. The joint pit shall be refilled with freshly prepared concrete, after inspection. Alternatively, it can be tested by suitable device like MIT SCAN with the permission of the Engineer. If the position or alignment of the dowel bars at one of these joints does not comply with the requirements and if that joint remains the only one that does not comply after the next 3 consecutive joints of the same type have been inspected, then the method of placing dowels shall be deemed to be satisfactory. In order to check sufficient joints for dowel bar alignment without extending the trial length unduly joints may be constructed at more frequent joint intervals than the normal spacing required in trial slabs.

b) If there are deficiencies in the first expansion joint that is constructed as a trial, the next expansion joint shall be a trial joint. Should this also be deficient, further trial of expansion joints shall be made as part of the trial length which shall not form part of the permanent works, unless agreed by the Engineer.

602.11.5.3 Density

In-situ density in trial length shall be assessed as described in Clause 903.5.2.2 from at least 3 cores drilled from each part of the trial length when the concrete is not less than 7 days old. Should any of the cores show honey-combing in the concrete, the trail length shall be rejected and the construction in the main carriageway shall not be permitted until further trials have shown that modification has been made which would result in adequate compaction.

602.11.5.4 Strength

Minimum of thirty (30) beams for flexural strength and thirty (30) cubes for compressive strength shall be prepared from the concrete delivered in front of the paving plant. Each pair of beams and cubes shall be from the same location/batch but different sets of beams and cubes shall be from different locations/batches. Compressive and flexural strength shall be tested after 28 days water curing in the laboratory.

At the age of 28 days, thirty (30) cores with diameter 150 mm shall be cut from the pavement slab when the thickness of concrete pavement is more than 300 mm. In case the concrete pavement thickness is less than 300 mm, the dia of core shall be 100 mm. The cores shall be suitably cut at both ends to provide a specimen of plain surface on both ends. The dia to height ratio of core shall be 1 to 2. For cylindrical specimen of PQC of dia 150 mm, the variation in dia shall be ± 0.5 mm, a tolerance on height shall be ± 1 mm for a specimen of height 300 mm or more. For cylindrical specimen of dia 100 mm, the variation in dia shall be ± 0.3 mm, and a tolerance on height shall be ±1 mm for a specimen height of 200 mm. The compressive strength test shall be conducted as per IS:516.

Concrete in the member represented by a core test shall be considered acceptable, if the average equivalent cube strength of the cores is equal to at least 85 percent of the cube strength (characteristic strength) of the grade of the concrete specified for the corresponding age of 28 days and no individual core has a strength less than 75 percent.

202.11.6 Approval and Acceptance

602.11.6.1 Approval of the materials, plant, equipment and construction methods shall be given when the trial length complies with the Specifications. The Contractor shall not proceed with normal working until the trial length has been approved. If the Engineer does not notify the Contractor of any deficiencies in any trial length within 7 days after the completion of that trial length, the Contractor may assume that the trial length, and the materials, plant, equipment and construction methods adopted are acceptable, provided that the 28 days strength of cubes and cores extracted from trial length meet the requirement of the Specified strength.

602.11.6.2 When approval has been given, the materials, plant, equipment and construction methods shall not thereafter be changed, except for normal adjustments and maintenance of plant, without the approval of the Engineer. Any changes in materials, plant, equipment, and construction methods shall entitle the Engineer to require the Contractor to lay a further trial length as described in this Clause to demonstrate that the changes will not adversely affect the permanent works.

602.11.6.3 Trial lengths which do not comply with the Specifications, with the exception of areas which are deficient only in surface texture and which can be remedied in accordance with Clause 602.9.11.6 shall be removed immediately upon notification of deficiencies by the Engineer and the Contractor shall construct a further trial length.

602.11.7 Inspection of Dowel Bars

602.11.7.1 Compliance with Clause 602.6.5. for the position and alignment of dowel bars at contraction and expansion joints shall be checked by measurements relative to the side forms or guide wires.

602.11.7.2 When the slab has been constructed, the position and alignment of dowel bars and any filler board shall be measured after carefully exposing them in the plastic

concrete across the whole width of the slab. When the joint is an expansion joint, the top of the filler board shall be exposed sufficiently in the plastic concrete to permit measurement of any lateral or vertical displacement of the board. During the course of normal working, these measurements shall be carried out in the pavement section at the end of days work by extending slab length by 2 m. After sawing the transverse joint groove, the extended 2 m slab shall be removed carefully soon after concrete has set to expose dowels over half the length. These dowels can be tested for tolerances. This joint shall be treated as construction joint. The position of dowel bars in any type of transverse joint ie, contraction, construction or expansion can alternatively be tested by suitable device like MIT SCAN with the permission of the Engineer.

602.11.7.3 If the position and alignment of the bars in a single joint in the slab is unsatisfactory then the next two joints shall be inspected. If only one joint of the three is defective, the rate of checking shall be increased to one joint per day until the Engineer is satisfied that compliance is being achieved.

602.11.7.4 After the dowel bars have been examined, the remainder of the concrete shall be removed over a width of 500 mm on each side of the line of the joint and reinstated to the satisfaction of the Engineer. The dowels shall be inserted on both sides of the 1 m wide slab by drilling holes and grouting with epoxy mortar. Plastic sheath as per Clause 602.6.5.5 shall be provided on dowels on one of the joints. The joint groove shall be widened and sealed as per Clause 602.10.

602.11.8 Inspection of Tie Bars

To check the position of the tie bars, one metre length 0.5 m on either side of the longitudinal joint shall be opened when the concrete is green (within 20 to 30 minutes of its laying). The pit shall be refilled with the fresh concrete of same mix after checking.

602.12 Measurement of Texture Depth – Sand Patch Method

602.12.1 The following Apparatus shall be used:

i) A cylindrical container of 25 ml internal capacity;

ii) A flat wooden disc 64 mm diameter with a hard rubber disc, 1.5 mm thick, next to one face, the reverse face being provided with a handle;

iii) Dry natural sand with a rounded particle shape passing a 300 micron IS sieve and retained on a 150 micron IS sieve.

602.12.2 Method

The surface to be measured shall be dried, any extraneous mortar and loose material removed and the surface swept clean using a wire brush both at right angles and parallel to the carriageway. The cylindrical container shall be filled with the sand, tapping the base 3 times on the surface to ensure compaction, and striking off the sand level with the top of the cylinder. The sand shall be poured into a heap on the surface to be treated. The sand shall

be spread over the surface, working the disc with its face kept flat in a circular motion so that the sand is spread into a circular patch with the surface depressions filled with sand to the level of peaks.

602.12.3 The diameter of the patch shall be measured to the nearest 5 mm. The texture depth of concrete surface shall be calculated from 31000/(DxD) mm where D is the diameter of the patch in mm.

602.12.4 Measurement of Texture Depth - Tining

602.12.4.1 The following apparatus shall be used :

i) Tire Tread Depth Gauge

A stainless steel tire tread depth gauge with graduations with least count of 1.0 mm. The gauge end may be modified to measure depth of tine texture.

ii) A stainless steel caliper to measure spacing of tines. If necessary the caliper may be modified to measure the spacing and width of tine texture. The guage shall be used after making necessary calibration.

iii) Wire brush

iv) Corborundum stone

v) Steel straight edge to remove snots etc. sticking to the surface. The straight edge may be of 6 x 25 x 300 mm size.

602.12.4.2 Test Section

A unit of testing shall be 75 m per lane. If the length of construction is less than 75 m it shall be taken as one unit.

602.12.4.3 Test Procedure

In each 75 m section, along the diagonal line, 10 points shall be selected for making checks of depth, width and spacing of tine grooves. The surface where tests are to be conducted shall be cleared carefully with a wire brush or a steel straight edge or using a corborundum plate to remove any upward projection of concrete. When the base plate of the gauge is in contact with the concrete surface, the gauge shall be pressed to the bottom of groove and the depth shall be measured and recorded at this location. At the same location, the spacing of tines shall be measured to verify whether the pattern recommended in Clause 602.9.11.1 is complied or not.

The average of depth and width at 10 locations shall be calculated and recorded to the nearest 1 mm. The spacing of spectrum measured at 10 locations shall be recorded separately.

602.12.5 The average depth shall be 3 to 4 mm. When the depth is less than 2.5 mm and in excess of 4.5 mm, the Contractor shall stop concreting till he corrects his tine

brush or replaces it. The sensors associated with work shall be again calibrated to achieve the required texture. The textured groove less than 2.5 mm shall be re-grooved using concrete saw at the cost of Contractor. Variation in texture width in the range of 3+1 mm and 3 - 0.5 mm will be acceptable. If the variation of width is in excess of this range, the Contractor shall stop work and correct the brush and technique. When the spacing of spectrum is not satisfactory, the Contractor shall replace the entire brush.

602.13 Opening to Traffic

No vehicular traffic shall be allowed to ply on the finished surface of a concrete pavement within a period of 28 days of its construction and until the joints are permanently sealed and cured. The road may be opened to regular traffic after completion of the curing period of 28 days and after sealing of joints is completed including the construction of shoulder, with the written permission of the Engineer.

602.14 Acceptance Criteria in Quality and Distress

i) **Tolerances for Surface Regularity, Level, Thickness and Strength:** The tolerances for surface regularity, level, thickness and strength shall conform to the requirements given in Clause 903.5. Control of quality of materials and works shall be exercised by the Engineer in accordance with Section 900.

ii) **Tolerances in Distress :** The acceptance criteria with regard to the types of distresses in rigid pavement shall be as per IRC:SP-83. "Guidelines for Maintenance, Repair and Rehabilitation of Cement Concrete Pavements". The cracks (of severity rating not more than 2) which may appear during construction or before completion of Defect Liability Period shall be acceptable with suggested treatments as given in IRC:SP-83.

Cement Concrete Pavement slabs having cracks of severity rating more than 2 i.e. cracks of width more than 0.5 mm for single discrete cracks, multiple and transverse cracks and cracks of width more than 3 mm in case of longitudinal cracks and of depth more than half of the concrete pavement slabs, shall be removed and replaced as per IRC:SP-83.

602.15 Measurements for Payment

602.15.1 Cement Concrete pavement shall be measured as a finished work in cubic metres of concrete placed based on the net plan area and thickness as measured in accordance with Clause 602.15.2.

602.15.2 The finished thickness of concrete for payment on volume basis shall be computed in the manner described in Clause 113.3 with the following modifications:

i) The levels shall be taken before and after construction at grid points 5 m centre to centre longitudinally in straight as well as at curves.

ii) A day's work is considered as a 'lot' for calculating the average thickness of the slab. In calculating the average thickness, individual measurements which are in excess of the specified thickness by more than 10 mm shall be considered as the specified thickness plus 10 mm.

602.15.3 Individual areas deficient by more than 10 mm shall be verified by the Engineer by ordering core cutting and if in his opinion the deficient areas warrant removal, they shall be removed and replaced with concrete of the thickness shown on the plans.

602.16 Rate

602.16.1 The Contract unit rate for the construction of the cement concrete pavement shall be payment in full for carrying out the operations required for the different items of the work as per these Specifications including full compensation for all labour, tools, plant, equipment, providing all materials i.e. aggregates, dowel bars, tie bars, PVC membrane, cement, stabilizers (lime, cements or any other stabilizers approved by the Engineer), storing, mixing, transportation, placing, compacting, finishing, curing, testing, all royalties, fees, rents where necessary, all leads and lifts and incidentals to complete the work as per Specifications.

The unit rate shall all include the full costs of construction, expansion, contraction and longitudinal joints including joint filler, sealant, primer, debonding strip and all other operations for completing the work. The construction and testing of trial length shall be included in the contract unit rate for the pavement and shall not be paid separately.

602.16.2 Where the average thickness for the lot is deficient by the extent shown in Table 600-6, payment for cement concrete pavement shall be made at a price determined by adjusting the contract unit price as per Table 600-6.

Table 600-6 : Payment Adjustment for Deficiency in Thickness

Deficiency in the Average Thickness of Day's Work	Percent of Contract Unit Price Payable
Up to 5 mm	100
6–10 mm	87

602.16.3 No additional payment shall be made for the extra thickness of the slab than shown on the drawings.

700

GEOSYNTHETICS

701 GEOSYNTHETICS FOR ROAD AND BRIDGE WORKS

701.1 Application and General Requirements

The specification covers the various applications of geosynthetic materials for use in road and bridge works including supplying and laying as per contract specifications.

Geosynthetic is a general classification for all synthetic materials used in geotechnical engineering application. It includes geotextiles, geogrids, geostrips, geomembranes, geonets, geocomposites, geocells, geosynthetic mats, paving fabric and glass grid etc. Geo fabrics made from natural fibres such as jute, and coir referred to herein under natural geotextiles may also be used in different geotechnical engineering applications.

i) **Geotextiles :** Any permeable synthetic textile used with foundation, soil, rock, earth, or any other geotechnical engineering-related material as an integral part of a human-made project, structure, or system.

The geotextile fabric shall be a woven, non-woven or knitted fabric consisting of long-chain polymeric filaments or yarns such as polypropylene, polyethylene or polyester or any combination thereof, formed into a stable network such that the filaments or yarns retain their relative position to each other.

There are several application areas for geotextiles requiring specific functions namely separation, filtration, drainage, reinforcement or a combination thereof.

ii) **Geogrids :** A deformed or non-deformed netlike polymeric material used with foundation, soil, rock, earth, or any other geotechnical engineering-related material as an integral part of human-made project, structure, or system.

Geogrids have relatively high strength, high modulus, and low-creep-sensitive polymers with apertures varying from 10 to 100 mm in size or more. The openings/holes in geogrids are either elongated ellipse, near squares with rounded corners, squares or rectangles. Geogrids can be of uni-axial grid, bi-axial grid or three dimensional grids. Geostrip is another form of geogrid, which is used in reinforced soil structures. It is primarily made of synthetic material in strips and is made from high tenacity polyester yarn and contained in a suitable polymer sheath.

These are used as reinforcement in pavements and reinforced soil slopes.

iii) **Geomembranes :** An essentially impermeable membrane (liner or barrier) used with foundation, soil, rock, earth, or in any other geotechnical application as an integral part of human-made project, structure, or system, used to control fluid migration.

Geomembranes are made from PVC or polyethylene sheets, which are duly protected from ultraviolet exposure by carbon black or any antioxidants and thermal stabilizers.

These are used as capillary cut off in roads in water logged areas.

iv) **Geonets :** Geonets are used in combination with other types of geosynthetics. These are usually formed by continuous polymeric ribs at acute angle to one another. When the ribs are opened relatively large size apertures are formed in a net like configuration.

These are used in combination with other geosynthetic materials to form a composite material.

v) **Geocomposite :** A manufactured material, which could be a combination of any two or more synthetic materials like geotextiles, geogrids, geonets and geomembranes etc., in laminated or composite form. One of the popular form of geocomposite is Drainage Composite. Drainage Composites are formed by combining geotextile or geomembrane with a core of geonet or seratted/corrugated polymeric materials.

Prefabricated Vertical Drains (PVD)/Band Drains and Fin Drains come under the category of geocomposites.

vi) **Geocell :** It is a three dimensional structure with interconnected cells. The geocells are made of polyester/polypropylene/high density polyethylene stabilized with carbon black.

Geocells may be used in erosion control of slopes.

vii) **Geosynthetic Mats :** These are two dimensional or three dimensional mats with specified thickness, made of multi-filaments, with apertures to allow vegetation growth for erosion control application. Geosynthetic mat consists of UV stabilized non-degradable polypropylene/polyethylene or similar polymer fibres that are extruded or heat bonded to provide a dimensionally stable matrix. A tension element like steel wire mesh or geogrid shall be included in these mats as reinforcement, where these mats are required to posses more strength against erosive forces, like in steep slopes or in heavy rainfall areas.

These are used for erosion protection of slopes.

viii) **Natural Geotextiles :** These geotextiles are made of natural fibres like jute or coir. The blankets/mats/mesh made of these fibres are sometimes further reinforced with polymeric nettings to enhance its tensile strength and for holding the fibres intact. The polymer netting is securely stitched on both sides of the fabric to form a strong quilted mat. These fabrics have excellent drapability and aid in quick growth of vegetation and are used for erosion control applications.

ix) **Paving Fabric and Glass Grids :** The paving fabrics are non woven heat set material, consisting of atleast 85% by weight of polyolefins, polyester or polyamides. They are heat bonded only on one side.

Glass grids are either a composite glass fibre reinforced geogrid with continuous filament nonwoven geotextile chemically /mechanically bonded to the grid, or bituminous coated glass fibre geogrids with or without adhesive on one side of the grid.

The paving fabric, glass grids and composite of fabric and glass grids are used in bituminous pavements to act as stress relieving membrane and crack retarding layer within the pavement structure. The paving fabric also serves the function of water barrier.

701.2 Testing, Certification and Acceptance

701.2.1 Geosynthetic Materials Shall be Tested and Certified in the Following Manner.

a) The manufacturer shall have ISO or CE certification for manufacturing process and quality control.

b) The manufacturer shall provide manufacturer's test certificate for every lot supplied from the factory.

c) The supplier shall provide third party test reports from an independent laboratory with valid accreditation for all the test values in Manufacturer's test certificate.

701.2.2 Geosynthetics shall be tested in accordance with tests prescribed by BIS. In absence of IS codes, tests prescribed either by ASTM, EN, BS or ISO shall be conducted.

701.2.3 The material shall meet the requirements as specified in the contract.

701.3 Marking

Geosynthetic rolls shall be marked with the following information:

a) Manufacturer's name

b) Roll number

c) Grade

d) Length

e) Date of manufacture; and

f) Product identification details

701.4 Packing, Storage and Handling

701.4.1 Each geosynthetic roll shall be wrapped with a material that will protect the geosynthetic from damage due to shipment, water, sunlight and contaminants. The protective wrapping with a tarpaulin or opaque plastic sheet shall be maintained during periods of shipment and storage.

During storage, geosynthetic rolls shall be elevated off the ground and adequately covered to protect from site construction damage, precipitation, prolonged ultra-violet radiation including sunlight, chemicals that are strong acids or strong bases, flames including welding sparks, temperatures in excess of 71°C, and any other environmental condition that may damage the physical properties of the geosynthetics.

701.4.2 If the outer layer of the geosynthetic is damaged, or exposed to sunlight for a period beyond that is permitted the outermost wrap of the rolls shall be discarded, and only the remaining undamaged/unexposed material shall be used. If the geosynthetic rolls become wet, the water proof cover shall be removed, the rolls shall be elevated off the ground and exposed to wind in order to dry the fabric. The paving fabric used with bitumen overlays shall be completely dry prior to installation.

702 GEOTEXTILES FOR DRAINAGE, SEPARATION AND EROSION CONTROL

702.1 Scope

The work covers the use of geotextile materials for drainage, separation/filtration and erosion control works including supplying and laying as per design, drawing and these specifications.

For drainage/filtration function, geotextile shall be able to convey water across the plane of the fabric throughout its design life.

For separation function the geotextile shall prevent intermixing of two layers of dissimilar materials, throughout the design life of the structure.

The geotextile as a filter material below erosion control measures like stone pitching or stone filled mattresses over the slopes, shall allow the water to flow out and at the same time prevent the loss of soil under the protective measures.

702.2 Material

702.2.1 Strength Requirement

The minimum strength of geotextile in terms of MARV under different installation conditions shall be as specified in Table 700-1.

Table 700-1 : Minimum Geotextile Strength Property Requirements

Installation Condition	Type	Strength Property Requirement (MARV)							
		Grab Strength in Newton (N) as per ASTM D 4632/ IS:13162 Part 5		Tear Strength in Newton (N) as per ASTM D 4533/ IS:14293		Puncture Strength in Newton (N) as per IS:13162 Part 4		Burst Strength in Newton (N) as per ASTM D 3786/ IS:1966	
		Elongation at Failure							
		<50 %	>50 %	<50 %	>50 %	<50 %	>50 %	<50 %	>50 %
Harsh installation condition	Type 1	1400	900	500	350	500	350	3500	1700
Moderate Installation condition	Type II	1100	700	400	250	400	250	2700	1300
Less Severe Installation condition	Type III	800	500	300	180	300	180	2100	950

Note:

1) All numeric values in the above table represent Minimum Average Roll Value (MARV) in weaker principal direction. The MARV is derived statistically as the average value minus two standard deviations.

2) When the geotextiles are joined together by field sewing, the seam strength shall be at least 60 percent of the material's tensile strength. All field seams shall be sewn with thread as strong as the material in the fabric.

3) The puncture strength if determined in accordance with ASTM D 6241, the minimum requirement in terms of "Newton (N)" shall be as follows:

Installation condition	Strength property requirement (MARV)	
	Puncture Strength in Newton (N) as per ASTM D 6241.	
	Elongation at Failure	
	< 50 %	> 50 %
Harsh installation condition	2800	2000
Moderate Installation condition	2250	1400
Less Severe Installation condition	1700	1000

702.2.2 Ultraviolet Stability Requirements

The material shall satisfy the ultraviolet stability requirements specified in Table: 700-2.

Table 700-2 : Requirements for Ultra Violet Stability

S.No	Properties of Fabric	Requirements (Retained Strength)
1)	Grab Strength	Not less than 70% after 500 hours of exposure
2)	Tear Strength	
3)	Puncture Strength	
4)	Burst Strength	

702.2.3 Hydraulic Requirements for Various Applications

702.2.3.1 Subsurface Drainage

The geotextile shall conform to the physical requirements specified in Table 700-3.

Table 700-3 : Geotextile Requirements for Subsurface Drainage

In-situ Passing 0.075 mm Sieve (%)	Permittivity, per sec, as per ASTM D 4491/IS:14324-1995	Maximum Apparent Opening Size, mm ASTM D 4751/IS:14294-1995
< 15	0.5	0.43
15 to 50	0.2	0.25
> 50	0.1	0.22

The type of geotextile shall be decided by the Engineer depending upon the installation conditions.

702.2.3.2 Separation

The geotextile for different subgrade soil conditions shall conform to the requirements given in Tables 700-4 and 700-5.

Table 700-4 : Geotextile Requirements for Separation (Subgrades Soaked CBR >3)

S. No.	Geotextile Property	Requirement
1)	Permittivity as per ASTM D 4491	0.02 sec^{-1} (per sec)
2)	Maximum Apparent Opening Size as per ASTM D 4751	0.60 mm

Table 700-5 : Geotextile Requirements for Separation (Subgrades Soaked CBR ≤3)

S. No.	Geotextile Property	Requirement
1)	Permittivity as per ASTM D 4491	0.05 sec^{-1} (per sec)
2)	Maximum Apparent Opening Size as per ASTM D 4751	0.43

702.2.3.3 Erosion Control

The geotextile for erosion control shall conform to requirements given in Table 700-6.

Table 700-6 : Geotextile Requirements for Erosion Control

In-situ Soil Passing 0.075 mm Sieve (%)	Permittivity, per sec ASTM D 4491	Maximum Apparent Opening Size, mm ASTM D 4751
<15	0.7	0.43
15 to 50	0.2	0.25
>50	0.1	0.22

702.3 Construction

702.3.1 General

Exposure of geotextiles to the elements between lay down and cover shall be a maximum of 14 days to minimize damage potential.

In trenches, after placing the backfill material, the geotextile shall be folded over the top of the filter material to produce a minimum overlap of 300 mm for trenches greater than 300 mm wide. In trenches less than 300 mm wide, the overlap shall be equal to the width of the trench. The geotextile shall then be covered with the subsequent course.

Overlap at roll ends and at adjacent sheets shall be a minimum of 450 mm, except when placed under water. In such instances, the overlap shall be a minimum of 1 m. Where seams are required in the longitudinal trench direction, they shall be joined by either sewing or overlapping. All seams and overlaps shall be subject to the approval of the Engineer.

Care shall be taken during installation so as to avoid any damage to the geotextile. Damages, if any, during installation shall be repaired by placing a geotextile patch over the damaged area and extending it 1m beyond the perimeter of the tear or damage, or as approved by the Engineer.

702.3.2 Subsurface Drainage

Construction shall conform to Clause 309.3 of the specifications.

702.3.3 Separation

After preparation of subgrade as per the specifications along the road alignment, geotextile shall be rolled out as indicated in the drawings. The entire roll shall be placed on the subgrade

and unrolled as smoothly as possible. Wrinkles and folds in the fabric shall be removed by stretching as required.

Adjacent rolls of geotextiles shall be overlapped, sewn, or joined as required. For curves, the geotextile shall be folded or cut and overlapped in the direction of construction. Folds in the geotextile shall be stapled or pinned approximately 0.6 m centre-to-centre. Before covering, the condition of the geotextile shall be checked for damage (i.e., holes, nips, tears, etc) by the Engineer.

Before placing the first lift of granular sub-base on the geotextile, a trial stretch of 100 m shall be laid as per roll width to establish a proper construction methodology of placing and compacting the sub-base in a manner that no damages are caused to the separation layer of geotextile.

702.3.4 Filter Layer Under Stone Pitching for Erosion Control

The geotextile shall be placed in intimate contact of soil ensuring slight tension, to avoid wrinkles or folds and shall be anchored on a properly shaped surface as indicated in drawings and approved by the Engineer. It shall be ensured that the placement of the overlying material be placed in such a manner that it does not tear/puncture the geotextile. Anchoring of the terminal ends of the geotextile shall be accomplished as per drawings through the use of key trenches or aprons at the crest and toe of slope.

The geotextile shall be placed with the machine direction parallel to the direction of water flow. Adjacent geotextile sheets shall be joined by either sewing or overlapping.

The pitching shall begin at the toe and proceed up the slope. Big sized boulders shall not be allowed to roll down the slope.

Any geotextile damaged shall be either replaced or repaired with a patch, as directed by the Engineer, at the cost of the contractor.

702.4 Measurement for Payment

The measurement for payment for sub surface drains shall be as per Clause 309.

The geotextile for separation and for filter layer shall be measured in square metres as per planned dimensions with no allowance for overlapping at transverse and longitudinal joints. Excavation, back fill, bedding and cover material shall be measured separately as per relevant clauses of the Contract.

702.5 Rate

The contract unit rate for subsurface drains using geotextile shall be as per Clause 309.5.

The contract unit rate for the accepted quantities of geotextile for separation and filter layer in place shall be full compensation for furnishing, preparing, hauling, and placing geotextile including all labour, freight, tools, equipment, and incidentals to complete the work as per specifications.

703 GEOGRID

703.1 Scope

The work covers the use of geogrids in sub-base of pavement, erosion control of slopes, reinforced soil slopes and reinforced soil walls including supplying and laying as per design, drawing and these specifications.

The use of geogrids as a component for reinforced soil slopes and walls shall be as per Section 3100.

703.2 Materials

703.2.1 General

Geogrids shall be either made from high tenacity polyester yarn jointed at cross points by weaving, knitting or bonding process with appropriate coating or from polypropylene or polyethylene or any other suitable polymeric material by an appropriate process. Geogrids manufactured by extrusion process are integrally jointed, mono or bi-directionally oriented or stretched meshes, in square, rectangular, hexagonal or oval mesh form. The geogrids manufactured by weaving/knitting/bonding process shall be formed into a stable network such that ribs, filaments or yarns retain their dimensional stability relative to each other including selvages.

703.2.2 Sub-base Reinforcement

Geogrid for use as reinforcement of sub-base layers of flexible pavements shall meet the requirement as per the design subject to the minimum requirements as given in Table 700-7.

703.2.3 Erosion Control

The geogrid for erosion control application shall have the minimum tensile strength of 4 kN/m, when tested as per ASTM D5035 (Minimum Average Roll Value in Machine Direction). The aperture opening size shall be minimum 20 mm x 20 mm and average grid thickness shall be minimum 1.0 mm. Geogrid for erosion control application shall be UV stabilized. The geogrid shall have ultraviolet stability of 70 percent after 500 hrs exposure as per ASTM D 4355.

Table 700-7 : Minimum Requirements for Geogrid for Sub-Base of Flexible Pavement

Property	Test Method	Unit	Requirement
Stiffness at 0.5% strain	ISO-10319	kN/m	≥350; both in machine and cross-machine direction
Tensile strength @2% strain	ASTM D6637	kN/m	≥15% of T_{ult} ; both in machine and cross-machine direction
Tensile strength @5% strain	ASTM D6637	kN/m	≥20% of T_{ult} ; both in machine and cross-machine direction
Junction Efficiency for extruded geogrids	GRI-GG2-87or ASTM-WK 14256	-	90% of rib ultimate tensile strength
Ultraviolet stability	ASTM D4355	-	70% after 500 hrs exposure

Note :

1) All numerical values in the Table represent MARV in the specified direction.
2) All geogrids shall be placed along machine direction parallel to the centre line of roadway alignment.

703.2.4 Reinforced Soil Slopes and Walls

The strength and other requirements shall be as per Section 3100.

703.3 Installation and Construction Operations

703.3.1 Sub-base Reinforcement

Prior to laying of geogrid, the surface shall be properly prepared, cleaned and dressed to the specified lines and levels as shown on the drawings.

The geogrid shall be laid within the pavement structure as shown on the drawings.

Geogrid reinforcement shall be placed flat, pulled tight and held in position by pins or suitable means until the subsequent pavement layer is placed.

No vehicle shall be allowed on geogrid unless it is covered by at least 150 mm thick sub-base material.

703.3.2 Erosion Control

The geogrid for erosion control applications shall be installed in accordance with the manufacturer's recommendation and as per Clause 706.3.

703.3.3 Reinforced Slopes and Walls

The geogrid for reinforced slopes and walls shall be installed in accordance with the manufacturer's recommendation and as per Section 3100.

703.4 Measurement for Payment

The geogrid shall be measured in square metres as per planned dimensions with no allowance for overlapping at joints, anchoring at toe and crest of the slope. Excavation, back fill, bedding and cover material shall be measured separately as per relevant clauses of the Specifications. Reinforced soil slopes and walls shall be measured as per Section 3100.

703.5 Rate

The contract unit rate for the accepted quantities of geogrid in place shall be in full compensation for furnishing, preparing, hauling, and placing geogrid including all labour, freight, tools, equipment, and incidentals to complete the work as per specifications.

For reinforced soil slopes and walls, Section 3100 shall govern.

704 GEOCOMPOSITE DRAINS

704.1 Scope

The work covers the use of geocomposite drainage system: (i) Fin drains and (ii) Prefabricated Vertical Drains. The work for fin drains shall be carried out in accordance with the requirements of these specifications and to the lines, grades, dimensions and other particulars shown on the drawings or as directed by the Engineer. The work for prefabricated vertical drain shall be carried out as per Clause 314.

Fin drains with plastic core shall be installed for affecting vertical and/or horizontal drainage.

Prefabricated vertical drains shall be installed in soft saturated subsoils at designed spacing so as to accelerate the rate of consolidation.

704.2 Materials

704.2.1 Fin Drains

Fin drains shall be made of light weight, three dimensional high compressive strength polyethylene core; and heat bonded or needle punched polypropylene/polyester geotextile provided on one side or both sides of the core as per the requirements. Geotextile used in a

drainage composite shall meet the requirements as specified in Table 700-9. The properties of the core material shall meet the requirements as indicated in Table 700-10.

Table 700-9 : Geotextile Requirements for Fin Drains

In-situ Soil Passing 0.075 mm Sieve (%)	Permittivity, per sec ASTM D 4491/IS:14324-1995	Maximum Apparent Opening Size, mm as per ASTM D 4751/IS:14294-1995
< 15	0.5	0.43
15 to 50	0.2	0.25
> 50	0.1	0.22

Table 700-10 : Properties for Fin Drain Core

Property		Test Method	Units	Minimum Average Roll Value
Tensile strength		EN ISO-10319	kN/m	16
CBR Puncture Resistance		EN ISO-12236	N	3000
Mass per unit area		EN ISO-9864	g/m^2	710
Thickness of Composite		EN ISO-9863	mm	4.5
In-plane permeability	Hydraulic Gradient, i=1 at 100 kPa pressure	EN ISO-12958	l/m	0.55
	Hydraulic Gradient, i=1 at 200 kPa pressure			0.45

704.2.2 Prefabricated Vertical Drains (PVDs)/Band Drains

The PVDs/Band Drains shall meet the requirements as specified in Table 700-11.

Table 700-11 : Properties for Prefabricated Vertical Drains/Band Drains

S. No	Property		Test Method	Value
A	**Composite Drain**			
1)	Width			≥100 mm
2)	Thickness		ASTM D5199	≥4 mm
3)	Tensile strength		ASTM D4595	>2.00 kN
4)	Elongation at break			>35%
5)	Discharge capacity	i = 1.0 at, 300 kPa pressure	ASTM D4716	>1.5 x 10^{-5} m^3/s

S. No	Property	Test Method	Value
B	**Core**		
1)	Material		Polypropylene/Polyethylene
2)	Configuration/structure		Corrugated, filament, dimpled, studded etc.
C	**Filter**		
1)	Material		Polyester/polypropylene
2)	Structure		Nonwoven
3)	Mass per unit area	ASTM D5261	>120 g/m^2
4)	Tensile strength	ASTM D4632	>500 N
5)	Elongation at break		>45%
6)	Trapezoid tear strength	ASTM D4533	>150 N
7)	Permeability	ASTM D4491	>5 x 10^{-6} m/s
8)	Apparent opening size	ASTM D4751	

704.3 Installation

704.3.1 Fin Drains

The installation of fin drains shall be as per drawings. Where fin drains are assembled on site, the assembly area shall be clean and dry. No geotextile or core material shall be exposed to daylight (or any source of ultraviolet radiation) for a period exceeding 50 hours. Where fin drains are laid in a trench, the bottom of the trench shall be free of irregularities and shall be brought to the required level. Rock and other hard protrusions shall be removed and any excess cut in the trench bottom shall be filled and compacted back to the required grade with suitable excavated or imported material as directed by the Engineer. Fin drains shall be capable of being connected longitudinal or laterally into pipe systems or chambers for inflow and outflow purposes. Joints parallel to the direction of flow and any exposed edge shall be protected from the ingress of soil by a geotextile wrapping with a minimum overlap of 150 mm or other measures as approved by the Engineer. The splicing of lengths of geotextile and minimum overlap shall be as per the drawing or as approved by the Engineer.

704.3.2 Prefabricated Vertical Drains (PVD)

The installations for PVD shall be as per relevant Clauses of Section 314.

704.4 Measurement for Payment

Measurement for Fin drain shall be in running metre of its length.

Measurement for payment for PVDs shall be as per Clause 314.2.3.

704.5 Rate

The Contract unit rate for fin drains shall be payment in full for all items such as excavation, dressing the sides and bottom, providing fin drains and installation etc., including full compensation for all materials, labour, tools, equipment incidental to complete the work as shown on drawings with all leads and lifts including removal and disposal with all leads of unsuitable material. Provision of inlets, outlet pipes, bedding, etc., wherever required shall be incidental to construction of drain.

Unit rate for installation of vertical drains shall be as per Clause 314.2.4.

705 GEOCELL FOR SLOPE PROTECTION

705.1 Scope

The work covers the use of geocells for erosion control of soil slope including supplying and laying as per design, drawings and these specifications.

Geocells filled with local soil or with granular material shall be placed on cut or fill slope to hold top cover soil and allow vegetation to grow.

705.2 Materials

The geocell is a three dimensional structure consisting of series of cells and resembles a honey combed structure. The geocell shall be made of a suitable polymeric material such as high density polyethylene stabilised with carbon black.

705.2.1 Strength and Other Requirements of Geocell

Geocell shall meet the minimum specifications and properties specified in Table 700-12.

The geocells for erosion control measures shall have cells with nominal opening of 450 cm^2 to 1250 cm^2 and perforations in the cell wall shall be between 11% to 16%.The cell depth for erosion control shall vary from 75 mm to 100 mm.

For anchoring the cells on steep slopes suitable arrangements shall be made as shown on the drawings.

705.3 Installation and Construction Operations

Prior to laying of geocell on the slope, the surface shall be properly prepared, clean and dressed to the specified lines and levels as shown on the drawings.

Table 700-12 : Requirements of Geocell for Slope Protection

Property	Test method	Unit	Min. Required Value
Density	ASTM D1505	gm/cm^3	0.900
Environmental Stress crack resistance (ESCR)	ASTM D1693	Hrs	3000
Carbon Black Content		% by Weight	1.5 to 2
Strip/Cell Wall thickness	ASTM D5199	mm	1.20
Seam Peel-Strength Test		N per 25 mm of cell depth.	350
Creep Rupture Strength	ASTM D2990		Creep Rupture Load at 10,000 hours shall be 1 kN minimum obtained from the 95% prediction interval at 10,000 hours considering a logarithmic time/ creep rupture model.

Trench keys along the crest and at the bottom of slope area shall be dug to fix the cellular system in the ground.

Cellular section shall be expanded to the predesigned shape and size, and placed over prepared slope. Geocell sections shall be fastened together using accessories as per manufacturer's installation guide and the drawings.

After cellular sections are secured to the slope, the cells shall be filled with the specified materials ensuring that no damage is caused to the cells. Filling of cells shall be done from the toe of slope to crest of slope.

The fill shall be overfilled between 25 mm to 50 mm and material shall be suitably tamped to leave soil flush with top edge of cell walls.

Once the soil filling is completed, turfing/seeding shall be done as recommended.

705.4 Measurement for Payment

The geocell protection work shall be measured as finished work in square meters as per planned dimensions with no allowance for overlapping at joints, anchoring at toe and crest of the slope. It shall also include the fixing and anchoring of cells in the ground with accessories as per manufacturer's recommendation or as specified in the design and drawings.

The above also includes turfing, seeding and all other incidental items to cover the work of vegetation on slopes, unless otherwise specified in the contract. The quantities of cellular

system for erosion control as shown on the drawings may be increased or decreased at the direction of the Engineer based on construction procedure and actual site conditions that occur during construction of the project. Such variations in quantity will not be considered as alterations in the details of construction or a change in the character of the work.

705.5 Rate

The contract unit rate for goecell protection system shall payment in full be in full for furnishing and installing the specified materials in accordance with the contract documents including fixing and anchoring of cells in the ground as per manufacturer's recommendations, filling of cells with specified materials, seeding and all other incidentals including all other items to complete the work as per these specifications.

706 GEOSYNTHETIC MAT

706.1 Scope

The work covers the use of geosynthetic mats for control of erosion of slopes including supplying and laying the mat, spreading soil and seeding to promote the design of vegetation, as per design, drawing and these specifications.

706.2 Material and Strength Requirements

Geosynthetic mat shall be a three-dimensional structure consisting of UV stabilized non-degradable polypropylene, polyethylene, nylon or similar polymer fibres that are extruded or heat bonded at the contact points to provide a dimensionally stable matrix for soil erosion protection. A tension element, i.e., a reinforcing element like geogrid or steel wire mesh shall be included along with the three dimensional polymeric mats to provide strength against erosive forces, if specified in the contract

The tensile strength requirements for non reinforced and reinforced three dimension geosynthetics mat shall meet the minimum requirement as specified in Table 700-13 and Table 700-14 respectively.

706.3 Installation

Prior to laying of geosynthetics mat on the slope, the surface shall be properly prepared, cleaned and dressed to the specified lines and levels as shown on the drawings. Specified trench keys along the crest and at the bottom of slope area shall be provided to fix the geosynthetics mat in the ground. In case the soil is not fertile, it shall be mixed with suitable amount of fertilizer or seeds.

Table 700-13 : Tensile Strength Requirement for Normal (Non-Reinforced) Three Dimensional Geosynthetic Mat for Erosion Control Application (Less Severe Environmental Condition)

Property	Test Method	Units	Minimum Average Roll Value
Tensile strength requirement (For slopes less than 60°)	ASTM D 5035	kN/m	2
Ultraviolet stability at 500h, Retained strength percentage with respect to original strength	ASTM D 4355	%	80
Thickness	ASTM D 6525	mm	6.5
Mass per unit area	ASTM D 3776	gm/m^2	250

Table 700-14 : Tensile Strength Requirement for Reinforced Three Dimensional Geosynthetic Mat for Erosion Control Application (Severe Environmental Conditions)

Property		Test Method	Units	Minimum Average Roll Value
Tensile strength requirement	For Slopes up to 60°	ASTM D 5035	kN/m	10
	For Slopes up to 80°			35
Ultraviolet stability at 500h, Retained strength percentage with respect to original strength		ASTM D 4355	%	80
Thickness		ASTM D 6525	mm	12
Mass per unit area of the composite		ASTM D 3776	gm/m^2	500

The work of laying the mat shall begin at the top of the slope providing anchor blankets in a 300 mm deep and 300 mm wide trench and anchoring with staples/pins. The mat shall then be unrolled down the slope in the machine direction. The blanket shall not be stretched but shall have full contact with the soil. The blanket shall be anchored using staples or stakes.

Edges of adjacent parallel rolls shall be overlapped by approximately 100 mm to 120 mm and anchored with staples at 600 mm to 800 mm spacing depending on the slope. When blankets have to be spliced, the upper blanket end shall be placed over lower blanket end (shingle style) with 300 mm overlap and anchoring with two staggered rows of staples at 300 mm spacing.

A minimum cover of soil shall be spread followed by spreading the seeds and fertiliser.

In the absence of rain, blankets shall be regularly watered for viable growth till vegetation sustains on its own.

If any damage due to heavy downpour is noticed, suitable corrective measures shall be taken immediately.

Gully formations, if any, shall be suitably corrected depending upon the site condition.

The treated area shall be protected from the movement of cattle (goat, sheep & cow). Grazing shall be avoided till the vegetation sustains on its own

706.4 Measurement for Payment

The geosynthetic mat shall be measured in square metre as per planned dimensions with no allowance for overlapping at joints, anchoring at toe and crest of the slope.

706.5 Rate

The contract unit rate for geosynthetic mat for erosion control shall be in full compensation for furnishing and installing the specified materials and growth of vegetative cover in accordance with the contract documents including site preparation, and for furnishing all labour, tools, equipment and incidentals to complete the work as per these Specifications.

707 NATURAL GEOTEXTILE

707.1 Scope

The work covers the use of natural geotextiles for control of erosion of slopes including supplying and laying the mat spreading soil and seeding to promote the growth of vegetation, as per design, drawing and these specifications.

Natural Geotextile shall be used to control surface erosion of top cover soil on cut or fill slopes and to facilitate vegetation to grow.

707.2 Strength Requirements

The natural fibre geotextiles made of Jute shall meet the minimum requirement as stated in IS:14715 - Woven Jute Geotextiles – Specification. However for coir fibre geotextile, it shall meet the requirements as specified in Table 700-15, when used for erosion control measures.

Table 700-15 : Typical Specifications of Natural Geotextile (MARV*) using Coir

Type of Price	Weight (gsm)	Width (cm)	Thickness (mm)	Tensile Strength (KN/m)		Elongation at Break (%)	Water Holding Capacity (%)	Porometry (°95), Micron
				MD	CD			
Open Mesh fabric	300	120	4.0	5	2.5	20	-	-
Nonwoven Fabric	450	150	4.0	7.5	2.5	30	80	75

* Minimum average roll value

707.3 Installation

Prior to laying of natural geotextiles on the slope, the surface shall be properly prepared, cleaned and dressed to the specified lines and levels as shown on the drawings. Specified trench keys along the crest and at the bottom of slope area shall be provided to fix the natural geotextile in the ground. In case the soil is not fertile, it shall be mixed with suitable amount of fertilizer or seeds.

The work of laying the mat shall begin at the top of the slope providing anchor blankets in a 300 mm deep and 300 mm wide trench and anchoring with staples/pins. The mat shall then be unrolled down slope in the machine direction. The blanket shall not be stretched but shall have full contact with the soil. The blanket shall be anchored using staples or stakes. Edges of adjacent parallel rolls shall be overlapped by approximately 100-120 mm and anchored with staples at 600-800 mm spacing depending on the slope. When blankets have to be spliced, the upper blanket end shall be placed over lower blanket end (shingle style) with 300 mm overlap and anchoring with two staggered rows of staples at 300 mm spacing.

A minimum cover of soil shall be spread followed by spreading the seeds and fertilizer. A slow release supplementary fertilizer may be applied to speed up the growth of the vegetation.

In the absence of rain, blankets shall be regularly watered for viable growth till vegetation sustains on its own.

If any damage due to heavy downpour is noticed, suitable corrective measures shall be taken immediately.

Gully formations, if any, shall be suitably corrected depending upon the site conditions.

The treated area shall be protected from the movement of cattle (goat, sheep & cow). Grazing shall be avoided till the vegetation sustains on its own.

707.4 Measurement for Payment

The natural geotextile shall be measured in square metres as per planned dimensions with no allowance for overlapping at joints, anchoring at toe and crest of the slope.

707.5 Rate

The contract unit rate for natural geotextile mat for erosion control shall be in full compensation for furnishing and installing the specified materials and growth of vegetative cover in accordance with the contract documents including site preparation, and for furnishing all labour, tools, equipment and incidentals to complete the work as per these Specifications.

708 PAVING FABRICS/GLASS GRIDS

708.1 Scope

This work shall consist of laying geosynthetic materials either non-woven paving fabric or fibre glass coated grid over existing bituminous surface, including preparation of surface and joining, stitching or overlapping of geosynthetic fabric etc., as part of highway pavement strengthening in layers as shown on drawings or as directed by the Engineer.

708.2 Material Requirements

708.2.1 Paving Fabrics

The paving fabric will be a non-woven heat set material consisting of at least 85 percent by weight of polyolefins, polyesters or polyamides. The paving fabric shall be resistant to chemical attack, rot and mildew and shall have no tears or defects which will adversely alter its physical properties. The fabric shall be specifically designed for pavement applications and be heat bonded only on one side to reduce bleed-through of tack coat during installation. The fabric shall meet the physical requirements given in Table 700-16.

Table 700-16 : Physical requirements for Paving Fabrics (Minimum Average Roll Value)

Property	Units	Standard Requirements	Test Method
Grab Tensile Strength	N	450	ASTM D 4632
Elongation	%	≥ 50	ASTM D 4632
Mass Per Unit Area	gm/m^2	140	ASTM D 3776
Asphalt Retention	Kg/10 sq.m	10*	ASTM D 6140
Melting Point	°C	150	ASTM D 276
Surface Texture	-	Heat bonded on One side only	Visual Inspection

Note : * the product asphalt retention property must meet MARV provided by the manufacturer.

708.2.2 Glass Grids

These will be either a composite glass fibre reinforced geogrid with continuous filament non-woven Geotextile chemically or mechanically bonded to the grid; or bituminous coated glass fiber geogrid with or without adhesive on one side of the grid. The physical and mechanical properties of glass grid fabric shall conform to the requirements given in Table 700-17.

Table 700-17 : Properties of Glass Fibre Grids

Property	Units	Requirement			
		Tensile Strength in Both Median and Cross-Machine Direction			
Tensile Strength	kN/m	ASTM D 6637	50	1000	200
% Elongation at break	%		> 4	> 4	> 4
Minimum Mesh Size	mm		25 x 25	12.5 x 12.5	12.5 x 12.5
Melting Point	°C	ASTM D 276	> 250	> 250	> 250

708.2.3 Asphalt Reinforcing Geogrids

These shall be made of high modulus polyester yarns with low creep properties. The grid shall be connected to low weight non-woven polypropylene fabric. The composite shall have a bitumen finish. The properties shall conform to the requirements given in Table 700-18.

Table 700-18 : Properties of Asphalt Reinforcement Geogrids

Property	Units	Test Method	Requirement		
			Tensile strength in both MD and CD, Not less than		
Tensile strength	kN/m	ISO-10319	25	50	100
% Elongation at break	%	ISO-10319	12.5%	12.5%	12.5%
Mesh Size			35 x 35 20 x 20	35 x 35 20 x 20	35 x 35 20 x 20
Melting Point	°C		> 190	> 190	> 190

708.3 Installation

708.3.1 Weather Limitations

The air and pavement temperatures shall be at least 10°C for placement of hot bitumen and at least 16°C for placement of asphalt emulsion. The asphalt tack coat or Glass grid shall not be placed when weather conditions are not suitable.

708.3.2 Surface Preparation

The pavement surface shall be dry and cleaned of all dirt and oil to the satisfaction of the Engineer. Cracks wider than 3 mm shall be cleaned and filled with suitable bituminous material

approved by the Engineer. Potholes and locally failed and cracked pavement sections shall be repaired as directed by the Engineer. If the existing pavement is rough or has been milled, a levelling course shall be provided prior to installation of the Glass grid.

708.3.3 Tack Coat

The tack coat used to impregnate the fabric and bond the fabric to the pavement shall be paving grade Bitumen of VG-10. Glass fiber grids with adhesive on one side may not require a tack coat.

The tack coat shall be applied using a calibrated distributor spray bar. Hand spraying, squeegee and brush application may be used only in locations where the distributor truck cannot reach. The tack coat shall be uniformly applied at a rate to bond the nonwoven scrim to the existing pavement surface. The tack coat application rate shall be 1 Kg per square metre or as specified in the contract. When using emulsions, the application rate must be increased as directed by the Engineer to take into account the water content in the emulsion. The temperature of the tack coat shall be sufficiently high to permit a uniform spray. Bitumen shall be sprayed at temperatures between 143°C and 163°C. For emulsions, the distributor tank temperatures shall be maintained between 55°C and 71°C. The target width of the tack coat application shall be equal to the Glass grid width plus 100-150 mm. The tack coat shall be applied only as far in advance of Glass grid installation as is appropriate to ensure a tacky surface at the time of Glass grid placement. Traffic shall not be allowed on the tack coat. Excess tack coat shall be cleaned from the pavement.

708.3.4 Paving Fabric Placement

The paving fabric shall be placed onto the tack coat using mechanical or manual lay down equipment capable of providing a smooth installation with a minimum amount of wrinkling or folding. The paving fabric shall be placed before to the tack coat cools and loses tackiness. After laying the paving fabric, some loose bituminous premix material shall be sprinkled on it in the wheel path of the paver and the tipper to ensure that the fabric is not picked up between the wheels. Paving fabric shall not be installed in areas where the bituminous overlay tapers to a thickness of less than 40 mm. Excess paving fabric which extends beyond the edge of existing pavement or areas of tack coat application shall be trimmed and removed. When bitumen emulsions are used, the emulsion shall be allowed to cure properly such that no water/moisture remains prior to placing the paving fabric. Wrinkles or folds in excess of 25 mm shall be single-lapped in the direction of the paving operation. Brooming and/ or pneumatic rolling will be required to maximize paving fabric contact with the pavement surface. Additional hand-placed tack coat may be required at laps and repairs as determined by the Engineer to satisfy bitumen retention of the lapped paving fabric. All areas where paving fabrics have been placed shall be paved the same day. No traffic except necessary construction equipment will be allowed to drive on the paving fabric. Turning of the paver and other vehicles shall be done gradually and kept to a minimum to avoid movement and

damage to the paving fabric. Abrupt starts and stops shall also be avoided. Damaged fabric shall be removed and replaced with the same type of fabric. Overlaps shall be shingle-lapped in the direction of paving. Additional tack coat shall be placed between the overlap to satisfy saturation requirements of the fabric. Overlap shall be sufficient to ensure full closure of the joint but not exceed 150 mm. Transverse joints shall be overlapped in the direction of the pavement by 100 to 150 mm or as per the manufacturer's recommendations or as directed by the Engineer. Longitudinal joints shall be overlapped by 20-30 mm or as per the manufacturer's recommendations or as directed by the engineer. The overlay operations shall be completed at the earliest after laying the fabric.

708.3.5 Glass Grid Placement

The glass grid shall be placed on the surface provided by the tack coat using mechanical or manual lay down equipment capable of providing a smooth installation with a minimum amount of wrinkling or folding. On curves, the Glass grid must be cut and realigned to match the curvature.

Glass grid shall not be installed in areas where the bituminous overlay tapers to a compacted thickness of less than 40 mm. When emulsions are used, the emulsion shall be allowed to cure properly such that no water/moisture remains prior to placing the glass grid. Wrinkles severe enough to cause folds shall be slit and laid flat. Brooming and/or rubber-tire rolling will be required to maximize glass grid contact with the pavement surface. Additional hand-placed tack coat may be required at overlaps and repairs as required by the Engineer. Turning and braking of the paver and other vehicles shall be done gradually and kept to a minimum to avoid movement and damage to the glass grid. Damaged composite shall be removed and replaced with the same type of composite and a tack coat.

All areas where glass grid has been placed shall be paved the same day. No traffic except necessary construction traffic shall be allowed to drive on the glass grid.

Overlaps shall be shingle - lapped in the direction of paving. Additional tack coat shall be placed between the overlap to satisfy saturation requirements of the fabric. Overlap shall be sufficient to ensure full closure of the joint but not exceeding 150 mm.

708.3.6 Overlay Placement

Bituminous overlay construction shall closely follow the placement of paving fabric or glass-grid. Excess tack coat that bleeds through the paving fabric or glass grid shall be removed by broadcasting hot mix or sand on the glass grid. Excess sand or hot mix shall be removed before beginning the paving operation. In the event of rainfall prior to the placement of the asphalt overlay, the fabric must be allowed to dry completely before the overlay is placed. Overlay asphalt thickness shall meet the requirements of the contract drawings and documents. The minimum compacted thickness of the first lift of overlay asphalt concrete shall not be less than 40 mm.

708.4 Measurement

The paving fabric/ glass fibre geogrid shall be measured in Square metres of paved area covered by the fabric/ glass fibre geogrid.

708.5 Rate

The contract unit rate shall be for the accepted quantities of paving fabric. The rate shall be full compensation for the work performed and furnishing, preparing, hauling and placing materials including all labour, material, freight, tools, equipment and incidentals to complete the work as per contract.

800

TRAFFIC SIGNS, MARKINGS AND OTHER ROAD APPURTENANCES

801 TRAFFIC SIGNS

801.1 Scope

The work shall consist of the fabrication, supply and installation of ground mounted traffic signs on roads. The details of the signs shall be as shown in the drawings and in conformity with the Code of Practice for Road Signs, IRC:67-2010.

801.2 Materials

The various materials and fabrication of the traffic signs shall conform to the following requirements:

801.2.1 Concrete

Concrete for foundation shall be of M 15 Grade as per Section 1700 or the grade shown on the drawings or otherwise as directed by the Engineer.

801.2.2 Reinforcing Steel

Reinforcing steel shall conform to the requirement of IS:1786 unless otherwise shown on the drawing.

801.2.3 Bolts, Nuts, Washers

High strength bolts shall conform to IS:1367 whereas precision bolts, nuts, etc., shall conform to IS:1364.

801.2.4 Plates and Supports

Plates and support sections for the sign posts shall conform to IS:226 and IS:2062 or any other relevant IS Specifications.

801.2.5 Substrate

Sign panels shall be fabricated on aluminium sheet, aluminium composite panel, fibre glass sheeting, or sheet moulding compound. Aluminum sheets used for sign boards shall be of smooth, hard and corrosion resistant aluminium alloy conforming to IS:736-Material Designation 24345 or 1900. Aluminium Composite Material (ACM) sheets shall be sandwiched construction with a thermoplastic core of Low Density Polyethylene (LDPE) between two thick skins/sheets of aluminium with overall thickness and 3 mm or 4 mm (as specified in the Contract), and aluminium skin of thickness 0.5 mm and 0.3 mm respectively on both sides.

The mechanical proportion of ACM and that of aluminium skin shall conform to the requirements given in Table 800-1, when tested in accordance with the test methods mentioned against each of them.

Table 800-1 : Specifications for Aluminium Composite Material (ACM)

S. No.	Description	Specification	
		Standard Test	Acceptable Value
A	**Mechanical Properties of ACM**		
1)	Peel off strength with retro reflective sheeting (Drum Peel Test)	ASTM D903	Min. 4 N/mm
2)	Tensile strength	ASTM E8	Min. 40 N/mm^2
3)	0.2% Proof Stress	ASTM E8	Min. 34 N/mm^2
4)	Elongation	ASTM E8	Min. 6%
5)	Flexural strength	ASTM 393	Min. 130 N/mm^2
6)	Flexural modulus	ASTM 393	Min. 44.00 N/mm^2
7)	Shear strength with Punch shear test	ASTM 732	Min. 30 N/mm^2
B	**Properties of Aluminium Skin**		
1)	Tensile strength (Rm)	ASTM E8	Min. 65 N/mm^2
2)	Modulus of elasticity	ASTM E8	Min. 70,000 N/mm^2
3)	Elongation	ASTM E8	A50 Min. 2%
4)	0.2% Proof Stress	ASTM E8	Min. 10 N/mm^2

801.2.6 Plate Thickness

Shoulder mounted ground sings with a maximum side dimension not exceeding 600 mm shall not be less than 1.5 mm thick with Aluminium and 3 mm thick with Aluminium Composite Material. All other signs be at least 2 mm thick with Aluminium and 4 mm thick with Aluminium Composite Material. The thickness of the sheet shall be related to the size of the sign and its support and shall be such that it does not bend or deform under prevailing wind and other loads.

801.2.7 In respect of sign sizes not covered by IRC:67, the structural details (thickness, etc.) shall be as per the approved drawings or as directed by the Engineer.

801.3 Traffic Signs having Retro-Reflective Sheeting

801.3.1 General Requirements

The retro-reflective sheeting used on the sign shall consist of the white or coloured sheeting having a smooth outer surface which has the property of retro-reflection over its entire surface.

It shall be weather-resistant and show colour fastness. It shall be new and unused and shall show no evidence of cracking, scaling, pitting, blistering, edge lifting or curling and shall have negligible shrinkage or expansion. A certificate of having tested the sheeting for co-efficient of retro-reflection, day/night time colour luminous, shrinkage, flexibility, linear removal, adhesion, impact resistance, specular gloss and fungus resistance and its having passed these tests shall be obtained from a Government Laboratory/Institute, by the manufacturer of the sheeting. The retro-reflective sheeting shall be either of Engineering Grade material with enclosed lens, High Intensity Grade with encapsulated lens or Micro-prismatic Grade retro-reflective element material as given in Clauses 801.3.2 to 801.3.7. Guidance on the recommended application of each class of sheeting may be taken from IRC:67.

801.3.2 High Intensity Grade Sheeting

801.3.2.1 High Intensity Grade (Type III)

This high intensity retro reflective sheeting shall be of encapsulated lens type consisting of spherical glass lens, elements adhered to a synthetic resin and encapsulated by a flexible, transparent waterproof plastic having a smooth surface or as an unmetallised micro prismatic reflective material element. The retro-reflective surface after cleaning with soap and water and in dry condition shall have the minimum co-efficient of retro-reflection (determined in accordance with ASTM D:4956-09) as indicated in **Table 800-2**.

Table 800-2 : Acceptable Minimum Co-efficient of Retro-Reflection for High Intensity Grade Sheeting (Type III) (Encapsulated Lens Type) (Candelas Per Lux Per Square Metre)

Observation Angle in Degrees	Entrance Angle in Degrees	White	Yellow	Orange	Green	Red	Blue	Brown
$0.1^{0\,B}$	-4^0	300	200	120	54	54	24	14
$0.1^{0\,B}$	$+30^0$	180	120	72	32	32	14	10
0.2^0	-4^0	250	170	100	45	45	20	12
0.2^0	$+30^0$	150	100	60	25	25	11	8.5
0.5^0	-4^0	95	62	30	15	15	7.5	5.0
0.5^0	$+30^0$	65	45	25	10	10	5.0	3.5

A minimum of Coefficient of Retro-reflection (RA) cd/fc/ft^2 (cd-lx-1m^2).

B Values for 0.1° observation angles are supplementary requirements that shall apply only when specified by the purchaser in the Contract or order. When totally wet, the sheeting shall show not less than 90 percent, of the values of retro reflectance indicated in above Table. At the end of 7 years, the sheeting shall retain at least 80 percent of its original retro-reflectance.

801.3.3 High Intensity Micro-Prismatic Grade Sheeting (HIP) (Type IV)

This sheeting shall be of high intensity retro-reflective sheeting made of micro-prismatic retro-reflective element material coated with pressure sensitive adhesive. The retro-reflective surface after cleaning with soap and water and in dry condition shall have the minimum co-efficient of retro-reflection (determined in accordance with ASTM D:4956-09) as indicated in **Table 800-3**.

Table 800-3 : Acceptable Minimum Co-efficient of Retro-Reflection for High Intensity Micro-Prismatic Grade Sheeting (Type IV) (Candelas Per Lux Per Square Metre)

Observation	Entrance	White	Yellow	Orange	Green	Red	Blue	Brown
$0.1^{0\,B}$	-4^0	500	380	200	70	90	42	25
$0.1^{0\,B}$	$+30^0$	240	175	94	32	42	20	12
0.2^0	-4^0	360	270	145	50	65	30	18
0.2^0	$+30^0$	170	135	68	25	30	14	8.5
0.5^0	-4^0	150	110	60	21	27	13	7.5
0.5^0	$+30^0$	72	54	28	10	13	6	3.5

A Minimum Coefficient of Retro reflection (RA) cd/fc/ft^2 (cd-lx-1m^2).

B Values for 0.1° observation angles are supplementary requirements that shall apply only when specified by the purchaser in the contract or order. When totally wet, the sheeting shall show not less than 90 percent of the values of retro reflection indicated in above Table . At the end of 7 years, the sheeting shall retain at least 80 percent of its original retro-reflectance.

801.3.4 Prismatic Grade Sheeting

801.3.4.1 Prismatic Grade Sheeting (Type VIII)

The reflective sheeting shall be retro reflective sheeting made of micro prismatic retro reflective material. The retro reflective surface, after cleaning with soap and water and in dry condition shall have the minimum co-efficient of retro reflection (determined in accordance with ASTM E 810) as indicated in Table 800-4.

801.3.4.2 Prismatic Grade Sheeting (Type IX)

The reflective sheeting shall be retro-reflective sheeting made of micro prismatic retro-reflective material. The retro-reflective surface, after cleaning with soap and water and in dry condition shall have the minimum co-efficient of retro-reflection (determined in accordance with ASTM E 810) as indicated in Table 800-5.

Table 800-4 : Acceptable Minimum Co-efficient of Retro-Reflection for Prismatic Grade Sheeting (Type VIII) (Candelas Per Lux per Square Metre)

Observation Angle	Entrance Angle	White	Yellow	Orange	Green	Red	Blue	Brown	Fluor-escent Yellow/ Green	Fluor-escent Yellow	Fluor-escent Orange
0.1°[B]	-4°	1000	750	375	100	150	45	30	800	600	300
0.1°[B]	+30°	460	345	175	46	69	21	14	370	280	135
0.2°	-4°	700	525	265	70	105	32	21	560	420	210
0.2°	+30°	325	245	120	33	49	15	10	260	200	95
0.5°	-4°	250	190	94	25	38	11	7.5	200	150	75
0.5°	+30°	115	86	43	12	17	5	3.5	92	69	35

A Minimum Coefficient of Retro reflection (R^A) cd/fc/ft^2 (cd-lx-1m^2).

B Values for 0.1° observation angles are supplementary requirements that shall apply only when specified by the purchaser in the contract or order. When totally wet, the sheeting shall show not less than 90 percent of the values of retro reflection indicated in above Table. At the end of 10 years, the sheeting shall retain at least 80 percent of its original retro-reflectance.

Table 800-5 : Acceptable Minimum Co-efficient of Retro-Reflection for Prismatic Grade Sheeting (Type IX) (Candelas Per Lux per Square Metre)

Obser-vation	Entrance	White	Yellow	Orange	Green	Red	Blue	Fluorescent Yellow/ Green	Fluore-scent Yellow	Fluore-scent Orange
0.1°[B]	-4°	600	500	250	66	130	130	530	400	200
0.1°[B]	+30°	370	280	140	37	74	17	300	220	110
0.2°	-4°	380	285	145	38	76	17	300	230	115
0.2°	+30°	215	162	82	22	43	10	170	130	65
0.5°	-4°	240	180	90	24	48	11	190	145	72
0.5°	+30°	135	100	50	14	27	6.0	110	81	41
1.0°	-4°	80	60	30	8.0	16	3.6	64	48	24
1.0°	+30°	45	34	17	4.5	9.0	2.0	36	27	14

A Minimum Coefficient of Retro reflection (RA) cd/fc/ft^2 (cd-lx-1m^2).

B Values for 0.1° observation angles are supplementary requirements that shall apply only when specified by the purchaser in the contract or order. When totally wet, the sheeting shall show not less than 90 percent of the values of retro reflection indicated in above Table. At the end of 10 years, the sheeting shall retain at least 80 percent of its original retro-reflectance.

801.3.4.3 Prismatic Grade Sheeting (Type XI)

A Retro-reflective sheeting typically manufactured as a cube corner. The reflective sheeting shall be retro-reflective sheeting made of micro prismatic retro-reflective material. The retro-

reflective surface, after cleaning with soap and water and in dry condition shall have the minimum co-efficient of retro-reflection (determined in accordance with ASTM E 810) as indicated in Table 800-6.

Table 800-6 : Acceptable Minimum Co-efficient of Retro-Reflection for Prismatic Grade Sheeting Type A (Type XI) (Candelas Per Lux per Square Metre)

Observation	Entrance Angle	White	Yellow	Orange	Green	Red	Blue	Brown	Fluorescent Yellow/ Green	Fluorescent Yellow	Fluorescent Orange
$0.1^{0\,B}$	-4^0	830	620	290	83	125	37	25	660	500	250
$0.1^{0\,B}$	$+30^0$	325	245	115	33	50	15	10	260	200	100
0.2^0	-4^0	580	435	200	58	87	26	17	460	350	175
0.2^0	$+30^0$	220	165	77	22	33	10	7.0	180	130	66
0.5^0	-4^0	420	315	150	42	63	19	13	340	250	125
0.5^0	$+30^0$	150	110	53	15	23	7.0	5.0	120	90	45
1.0^0	-4^0	120	90	42	12	18	5.0	4.0	96	72	36
1.0^0	$+30^0$	45	34	16	5.0	7.0	2.0	1.0	36	27	14

A Minimum Coefficient of Retro-reflection (RA) cd/fc/ft^2 (cd-lx-1m^2).

B Values for 0.1^0 observation angles are supplementary requirements that shall apply only when specified by the purchaser in the contract or order. When totally wet, the sheeting shall show not less than 90 percent of the values of retro reflection indicated in above Table. At the end of 10 years, the sheeting shall retain at least 80 percent of its original retro-reflectance.

801.3.5 Adhesives

The sheeting shall have a pressure-sensitive adhesive of the aggressive-tack type requiring no heat, solvent other preparation for adhesion to a smooth clean surface, in a manner recommended by the sheeting manufacturer. The adhesive shall be protected by an easily removable liner (removable by peeling without soaking in water or other solvent) and shall be suitable for the type of material of the base plate used for the sign. The adhesive shall form a durable bond to smooth, corrosion and weather resistant surface of the base plate such that it shall not be possible to remove the sheeting from the sign base in one piece by use of sharp instrument. The sheeting shall be applied in accordance with the manufacturer's specifications.

801.3.6 Fabrication

Surface to be reflectorised shall be effectively prepared to receive the retro-reflective sheeting. The aluminium sheeting shall be de-greased either by acid or hot alkaline etching and all

scale/dust removed to obtain a smooth plain surface before the application of retro-reflective sheeting. If the surface is rough, approved surface primer may be used. After cleaning, metal shall not be handled, except by suitable device or clean canvas gloves, between all cleaning and preparation operation and application of reflective sheeting/primer. There shall be no opportunity for metal to come in contact with grease, oil or other contaminants prior to the application of retro-reflective sheeting. Complete sheets of the material shall be used on the signs except where it is unavoidable. At splices, sheeting with pressure-sensitive adhesives shall be overlapped not less than 5 mm. Where screen printing with transparent colours is proposed, only butt joint 'shall be used. The material shall cover the sign surface evenly and shall be free from twists, cracks and folds. Cut-outs to produce legends and borders shall be bonded with the sheeting in the manner specified by the manufacturer.

801.3.7 Messages/Borders

The messages (legends, letters, numerals etc.) and borders shall either be screen-printed or of cut out from durable transparent overlay or cut out from the same type of reflective sheeting for the cautionary/mandatory sign boards. Screen printing shall be processed and finished with materials and in a manner specified by the sheeting manufacturer. For the informatory and other sign boards, the messages (legends, letters, numerals etc.) and borders shall be cut out from durable transparent overlay film or cut-out from the same reflective sheeting only. Cut-outs shall be from durable transparent overlay materials as specified by the sheeting manufacturer and shall be bonded with the sheeting in the manner specified by the manufacturer. For screen-printed transparent coloured areas on white sheeting, the co-efficient of retro-reflection shall not be less than 50 percent of the values of corresponding colour in Tables 800-2 to 800-8 as applicable. Cut-out messages and borders, wherever used, shall be either made out of retro-reflective sheeting or made out of durable transparent overlay except those in black which shall be of non-reflective sheeting or opaque in case of durable transparent overlay.

801.3.8 Colour for Signs

801.3.8.1 Signs shall be provided with retro-reflective sheeting and/or overlay film/ screening ink. The reverse side of all signs shall be painted grey.

801.3.8.2 Except in the case of railway level crossing signs the sing posts shall be painted in 250 mm side bands, alternately black and white. The lowest band next to be ground shall be in black.

801.3.8.3 The colour of the material shall be located within the area defined by the chromaticity coordinates in Table 800-7 and comply with the luminance factor when measured as per ASTM D-4956.

Table 800-7 : Colour Specified Limits (Daytime)

Colour	1		2		3		4		Daytime Luminance Factor (Y%)	
	x	y	x	y	x	y	x	y	Min.	Max.
White	0.303	0.300	0.368	0.366	0.340	0.393	0.274	0.329	15	- -
Yellow	0.498	0.412	0.557	0.442	0.479	0.520	0.438	0.472	24	45
Green	0.026	0.399	0.166	0.364	0.286	0.446	0.207	0.771	2.5	11
Red	0.648	0.351	0.735	0.265	0.629	0.281	0.565	0.346	2.5	11
Blue	0.140	0.035	0.244	0.210	0.190	0.255	0.065	0.216	1	10
Orange	0.558	0.352	0.636	0.364	0.570	0.429	0.506	0.404	12	30
Brown	0.430	0.340	0.610	0.390	0.550	0.450	0.430	0.390	1	6
Fluorescent Yellow-Green	0.387	0.610	0.369	0.546	0.428	0.496	0.460	0.540	60	- -
Fluorescent Yellow	0.479	0.520	0.446	0.483	0.512	0.421	0.557	0.442	45	- -
Fluorescent Orange	0.583	0.416	0.535	0.400	0.595	0.351	0.645	0.355	25	- -

The colours shall be durable and uniform in acceptable hue when viewed in day light or under normal headlights at night.

801.3.8.4 The Regulatory/Prohibitory and warning signs shall be provided with white background and red border. The legend/ symbol for these signs shall be in black colour. The Mandatory sign shall be provided with Blue background and white Symbol/letter.

801.3.8.5 The colours chosen for informatory or guide signs shall be distinct for different classes of roads. For National Highways and State Highways, these signs shall be of green background and for Expressways these signs shall be of blue background with white border, legends and word messages.

801.3.9 Refurbishment

Where existing signs are specified for refurbishment, the sheeting shall have a semi-rigid aluminium backing or materials as per Clause 801.2.5, pre-coated with aggressive-tack type pressure sensitive adhesive. The adhesive shall be suitable for the type of material used for the sign and should thoroughly bond with that material.

801.3.10 Sizes of Letters

801.3.10.1 Letter size should be chosen with due regard to the speed, classification and location of the road, so that the sign is of adequate size for legibility but without being too large or obtrusive. The size of the letter, in terms of x-height, to be chosen as per the design speed is given in Table 800-8.

Table 800-8 : Acceptable Limits for Sizes of Letters

Design Speed (Km./hr.)	Minimum 'x' Height of the Letters (mm)	Minimum Sight Distance/ Clear Visibility Distance (m)	Maximum Distance from Centre Line (m)
40	100	45	12
50	125	50	14
65	150	60	16
80	250	80	21
100	300	90	24
120	400	115	32

The thickness of the letters and their relation to the x-height, the width, the heights are indicated in Table IV (a) of the Annexure-4 of IRC:67 to facilitate the design of the informatory signs and definition plates.

801.3.10.2 For advance direction signs on non-urban roads, the letter size ('x' height) should be minimum of 150 mm for Expressway, National and State Highways and 100 mm for other roads. In case of overhead signs, the size ('X' height) of letters may be minimum 300 mm. Thickness of the letter could be varied from 1/6 to 1/5 of the letter 'x' size. The size of the initial uppercase letter shall be 1-1/3 times x-height. In urban areas, letter size shall be 100 mm on all directional signs. For easy and better comprehension, the word messages shall be written in upper case letters only.

801.3.10.3 Letter size on definition plates attached with normal sized signs should be 100 mm or 150 mm. In the case of small signs, it should be 100 mm. Where the message is long, as for instance in "NO PARKING" and "NO STOPPING" signs, the message may be broken into two lines and size of letters may be varied in the lines so that the definition plate is not too large. The lettering on definition plates will be all in upper case letters.

801.3.11 Warranty and Durability

The Contractor shall obtain from the manufacturer a ten year warranty for satisfactory field performance including stipulated retro-reflectance of the retro-reflective sheeting of micro-

prismatic sheeting and a seven-year warranty for high intensity grade and submit the same to the Engineer. The warranty shall be inclusive of the screen printed or cut out letters/legends and their bonding to the retro-reflective sheeting. The Contractor/supplier shall also furnish the LOT numbers and certification that the signs and materials supplied against the assigned work meets all the stipulated requirements and carry the stipulated warranty and that the contractor/supplier is the authorized converter of the particular sheeting.

All signs shall be dated during fabrication with indelible markings to indicate the start of warranty. The warranty shall also cover the replacement obligation by the sheeting manufacturer as well as contractor for replacement/repair/restoration of the retro-reflective efficiency.

A certificate in original shall be given by the sheeting manufacturer that its offered retro-reflective sheeting has been tested for various parameters such as co-efficient of retro-reflection, day/night time colour and luminance, shrinkage, flexibility, linear removal, adhesion, impact resistance, specular gloss and fungus resistance; the tests shall be carried out by a Government Laboratory in accordance with various ASTM procedures and the results must show that the sheeting has passed the requirements for all the above mentioned parameters. A copy of the test reports shall be attached with the certificate.

801.4 Installation

801.4.1 The traffic signs shall be mounted on support posts, which may be of GI pipes conforming to IS:1239, Rectangular Hollow Section conforming to IS:4923 or Square Hollow Section conforming to IS:3589. Sign posts, their foundations and sign mountings shall be so constructed as to hold these in a proper and permanent position against the normal storm wind loads or displacement by vandalism. Normally, signs with an area up to 0.9 sq.m shall be mounted on a single post, and for greater area two or more supports shall be provided. Post-end(s) shall be firmly fixed to the ground by means of properly designed foundation. The work of foundation shall conform to relevant Specifications as specified.

801.4.2 All components of signs (including its back side) and supports, other than the reflective portion and G.I. posts shall be thoroughly de-scaled, cleaned, primed and painted with two coats of epoxy/ fibre glass/ powder coated paint. Any part of support post below ground shall be painted with protective paint.

801.4.3 The signs shall be fixed to the posts by welding in the case of steel posts and by bolts and washers of suitable size. After the nuts have been tightened, the tails of the bolts shall be furred over with a hammer to prevent removal.

801.5 Measurement for Payment

The measurement of standard cautionary, mandatory and information signs shall be in numbers of different types of signs supplied and fixed, while for direction and place identification signs, these shall be measured by area in square metres.

801.6 Rate

The Contract unit rate shall be payment in full for the cost of making the road sign, including all materials, installing it at the site furnishing of necessary test certificates, warranty and incidentals to complete the work in accordance with these Specifications.

802 OVERHEAD SIGNS

802.1 Scope

The work shall consist of fabrication, supply and installation of overhead traffic signs on roads. The details of the signs shall be as shown in the drawings and in conformity with the Code of Practice for Road Signs, IRC:67-2010.

802.2 Height

Overhead signs shall provide a vertical clearance of not less than 5.5 m over the entire width of the pavement and shoulders except where a lesser vertical clearance is used for the design of other structures. The vertical clearance to overhead sign structures or supports need not be greater than 300 mm in excess of the minimum clearance of other structures.

802.3 Lateral Clearance

802.3.1 The minimum clearance outside the usable roadway shoulder for signs mounted at the road side or for overhead sign supports either to the right or left side of the roadway shall be 1.80 m. This minimum clearance of 1.80 m shall also apply outside of an unmountable kerb. Where practicable, a sign should not be less than 3 m from the edge of the nearest traffic lane. Large guide signs should be farther removed preferably 9 m or more from the nearest traffic lane, unless otherwise specified. Lesser clearances, but not generally less than 1.80 m, may be used on connecting roadways or ramps at inter-changes.

802.3.2 Where a median is 3.6 m or less in width, consideration should be given to spanning over both roadways without a central support. Where overhead sign supports cannot be placed at a safe distance away from the line of traffic or in an otherwise protected site, they should either be so designed as to minimize the impact forces or protect motorists adequately by a physical barrier or guard rail of suitable design.

802.4 Materials for Overhead Sign and Support Structures

802.4.1 Aluminium alloy or galvanized steel to be used as truss design supports shall conform to relevant IS. These shall be of sections and type as per structural design requirements as shown on the plans.

802.4.2 After steel trusses have been fabricated and all required holes punched or drilled on both the horizontal truss units and the vertical and support units, they shall be galvanized in accordance with IS Specifications.

802.4.3 Where aluminium sheets are used for road signs, they shall be of smooth, hard and corrosion resistant aluminium alloy conforming to IS:736 - Material Designation 24345 or 1900. The thickness of sheet shall be related to the size of the sign with minimum thickness of sheet as 1.5 mm.

802.4.4 High strength bolts shall conform to IS:1367 whereas precision bolts, nuts etc. shall conform to IS:1364.

802.4.5 Plates and support sections for sign posts shall conform to IS:226 and IS:2062.

802.4.6 The overhead signs shall be of micro prismatic retro-reflective sheeting.

802.5 Size and Locations of Signs

802.5.1 The size of the signs, letters and their placement shall be as specified in the Contract drawings and Specifications.

802.5.2 In the absence of details or for any missing details in the Contract documents, the signs shall be provided as directed by the Engineer.

802.6 Installation

802.6.1 From safety and aesthetic considerations, overhead signs shall be mounted on overhead bridge structures. Where these are required to be provided at some other locations, the support system providing pleasing aesthetics, should be properly designed based on sound engineering principles, to safely sustain the dead load, live load and wind load on the completed sign system. For this purpose, the overhead signs shall be designed to withstand a wind loading of 150 kg/m^2 normal to the face of the sign and 30 kg/m^2 transverse to the face of the sign. In addition to the dead load of the structure, walkway loading of 250 kg concentrated live load shall also be considered for the design of the overhead sign structure.

802.6.2 The supporting structure and signs shall be fabricated and erected as per details given in the plans and at locations directed by the engineer.

802.6.3 Sign posts, their foundations and sign mountings shall be so constructed as to hold signs in a proper and permanent position to adequately resist swaying in the wind or displacement by vandalism.

802.6.4 The work of construction of foundation for sign supports including excavation and backfill, forms, steel reinforcement, concrete and its placement shall conform to the relevant Specifications given in these Specifications.

802.6.5 The structures shall be erected with the specified camber and in such a manner as to prevent excessive stresses, injury and defacement.

802.6.6 Brackets shall be provided for mounting signs of the type to be supported by the structure. For better visibility, they shall be adjustable to permit mounting the sign faces at any angle between a truly vertical position and three degree from vertical. This angle shall be obtained by rotating the front lower edge of the sign forward. All brackets shall be of a length equal to the heights of the signs being supported.

802.6.7 Before erecting support structures, the bottom of each base plate shall be protected with an approved material which will adequately prevent any harmful reaction between the plate and the concrete.

802.6.8 The end supports shall be plumbed by the use of levelling nuts and the space between the foundation and base plate shall be completely filled with an anti-shrink grout.

802.6.9 Anchor bolts for sign supports shall be set to proper locations and elevation with templates and carefully checked after construction of the sign foundation and before the concrete has set.

802.6.10 All nuts on aluminium trusses, except those used on the flanges shall be tightened only until they are snug. This includes the nuts on the anchor bolts. A thread lubricant shall be used with each aluminium nut.

802.6.11 All nuts on galvanized steel trusses, with the exception of high strength bolt connections, shall be tightened only to a snug condition.

802.6.12 Field welding shall not be permitted.

802.6.13 After installation of signs is complete, the sign shall be inspected by the Engineer. If specular reflection is apparent on any sign, its positioning shall be adjusted by the Contractor to eliminate or minimize this condition.

802.7 Measurements for Payment

802.7.1 Aluminium or steel overhead sign structure shall be measured for payment by the specific unit (each) complete in place as indicated in the Bill of Quantities and the detailed drawings(s).

802.7.2 Flat sheet aluminium signs with retro-reflective sheeting thereon shall be measured for payment by the square metre, complete in place.

802.8 Rate

802.8.1 The Contract unit rate for overhead sign structure shall be payment in full compensation for furnishing all labour, materials, tools, equipment, excavation for foundation, concrete, reinforcement, painting of structural steel and sign back, fabrications and installation, furnishing of necessary test certificates, warranty and all other incidental costs necessary to complete the work to these Specifications.

802.8.2 The Contract unit rate for aluminium sheet signs shall include the cost of making the sign including all materials and fixing the same in position and all other incidental costs necessary to complete the work to these Specifications.

803 ROAD MARKINGS

803.1 Scope

The work shall consist of providing road markings of specified width, layout and design using paint of the required specifications as given in the Contract and as per guidelines contained in from IRC:35-1997.

803.2 Materials

Road markings shall be of ordinary road marking paint hot applied thermoplastic compound, reflectorised paint or cold applied reflective paint as specified in the item and the material shall meet the requirements as specified in these Specifications.

803.3 Ordinary Road Marking Paint

803.3.1 Ordinary paint used for road marking shall conform to Grade I as per IS:164.

803.3.2 The road marking shall preferably be laid with appropriate road marking machinery.

803.4 Hot Applied Thermoplastic Road Marking

803.4.1 Thermoplastic Material

803.4.1.1 General

The thermoplastic material shall be homogeneously composed of aggregate, pigment, resins and glass reflectorizing beads. The colour of the compound shall be white or yellow (IS colour No. 356) as specified in the drawings or as directed by the Engineer.

803.4.1.2 Requirements :

i) **Composition:** The pigment, beads, and aggregate shall be uniformly dispersed in the resin. The material shall be free from all skins, dirt and foreign objects and shall comply with requirements indicated in Table 800-9.

Table 800-9 : Proportions of Constituents of Marking Material (Percentage by Weight)

Component	White	Yellow
Binder	18.0 min.	18.0 min.
Glass Beads	30–30	30–30
Titanium Dioxide	10.0 min.	- -
Calcium Carbonate and Inert Fillers	42.0 max.	See Note below
Yellow Pigments	- -	See Note below

Note : Amount of yellow pigment, calcium carbonate and inert fillers shall be at the option of the manufacturer, provided all other requirements of this Specification are met.

ii) **Properties:** The properties of thermoplastic material, when tested in accordance with ASTM D36/BS-3262-(Part I), shall be as below:

a) **Luminance :**

White: Daylight luminance at 45°-65 percent min. as per AASHTO M 249

Yellow: Daylight luminance at 45°-45 percent min. as per AASHTO M 249

b) **Drying time :** When applied at a temperature specified by the manufacturer and to the required thickness, the material shall set to bear traffic in not more than 15 minutes.

c) Skid resistance: not less than 45 as per BS:6044.

d) Cracking resistance at low temperature: The material shall show no cracks on application to concrete blocks.

e) Softening point: 102.5°C ± 9.5°C as per ASTM D 36.

f) Yellowness index (for white thermoplastic paint): not more than 0.12 as per AASHTO M 249

iii) **Storage life :** The material shall meet the requirements of these Specifications for a period of one year. The thermoplastic material must also melt uniformly with no evidence of skins or unmelted particles for the one year storage period. Any material not meeting the above requirements shall be replaced by the manufacturer/supplier/ Contractor.

iv) **Reflectorisation :** Shall be achieved by incorporation of beads, the grading and other properties of the beads shall be as specified in Clause 803.4.2.

v) **Marking :** Each container of the thermoplastic material shall be clearly and indelibly marked with the following information:

1) The name, trade mark or other means of identification of manufacturer
2) Batch number
3) Date of manufacture
4) Colour (white or yellow)
5) Maximum application temperature and maximum safe heating temperature.

vi) **Sampling and Testing :** The thermoplastic material shall be sampled and tested in accordance with the appropriate ASTM/BS method. The Contractor shall furnish to the Engineer a copy of certified test reports from the manufacturers of the thermoplastic material showing results of all tests specified herein and shall certify that the material meets all requirements of this Specification.

803.4.2 Reflectorizing Glass Beads

803.4.2.1 General

This Specification covers two types of glass beads to be used for the production of reflectorised pavement markings.

Type 1 beads are those which are a constituent of the basic thermoplastic compound vide Table 800-9 and Type 2 beads are those which are to be sprayed on the surface vide Clause 803.6.4.

803.4.2.2 The glass beads shall be transparent, colourless and free form milkiness, dark particles and excessive air inclusions.

These shall conform to the requirements spelt out in Clause 803.4.2.3.

803.4.2.3 Specific Requirements

a) **Gradation :** The glass beads shall meet the gradation requirements for the two types as given in Table 800-10.

Table 800-10 : Gradation Requirements for Glass Beads

Sieve Size	Percent Retained	
	Type 1	Type 2
1.18 mm	0 to 3	
850 micron	5 to 20	0 to 5
600 micron	- -	5 to 20
425 micron	65 to 95	- -
300 micron	- -	30 to 75
180 micron	0-10	10 to 30
Below 180 micron	- -	0 to 15

b) **Roundness:** The glass beads shall have a minimum of 70 percent true spheres.

c) **Refractive index:** The glass beads shall have a minimum refractive index of 1.50.

d) **Free flowing properties:** The glass beads shall be free of hard lumps and clusters and shall dispense readily under any conditions suitable for paint striping. They shall pass the free flow-test.

803.4.2.4 Test Methods

The specific requirements shall be tested with the following methods:

i) Free-flow test: Spread 100 grams of beads evenly in a 100 mm diameter glass dish. Place the dish in a 250 mm inside diameter dessicator which is filled within 25 mm of the top of a dessicator plate with sulphuric acid water solution (specific gravity 1.10). Cover the dessicator and let it stand for 4 hours at 20°C to 29°C. Remove sample from dessicator, transfer beads to a pan and inspect for lumps or clusters. Then pour beads into a clean, dry glass funnel having a 100 mm stem and 6 mm orifice. If necessary, initiate flow by lightly tapping the funnel. The glass spheres shall be free of lumps and clusters and shall flow freely through the funnel.

ii) The requirements of gradation, roundness and refractive index of glass beads and the amount of glass beads in the compound shall be tested as per BS:6088 and BS:3262 (Part I).

iii) The Contractor shall furnish to the Engineer a copy of certified test reports from the manufacturer of glass beads obtained from a reputed laboratory showing results of all tests specified herein and shall certify

that the material meets all requirements of these Specifications. However, if so required, these tests may be carried out as directed by the Engineer.

803.4.3 Application Properties of Thermoplastic Material

803.4.3.1 The thermoplastic material shall readily get screeded/extruded at temperatures specified by the manufacturers for respective method of application to produce a line of specified thickness which shall be continuous and uniform in shape having clear and sharp edges.

803.4.3.2 The material upon heating to application temperatures shall not exude fumes, which are toxic, obnoxious or injurious to persons or property.

803.4.4 Preparation

i) The material shall be melted in accordance with the manufacturer's instructions in a heater with a mechanical stirrer to give a smooth consistency to the thermoplastic material to avoid local overheating. The temperature of the mass shall be within the range specified by the manufacturer, and shall on no account be allowed to exceed the maximum temperature stated by the manufacturer. The molten material should be used as expeditiously as possible and for thermoplastic material which has natural binders or is otherwise sensitive to prolonged heating, the material shall not be maintained in a molten condition for more than 4 hours.

ii) After transfer to the laying equipment, the material shall be maintained within the temperature range specified by the manufacturer for achieving the desired consistency for laying.

803.5 Reflectorised Paint

Reflectorised paint, if used, shall conform to the Specification by the manufacturers and approved by the Engineer. Reflectorising glass beads for reflectorising paints where used shall conform to the requirements of Clause 803.4.2.

803.6 Application

803.6.1 Marking shall be done by machine. For locations where painting cannot be done by machine, approved manual methods shall be used with prior approval of the Engineer. The Contractor shall maintain control over traffic while painting operations are in progress so as to cause minimum inconvenience to traffic compatible with protecting the workmen.

803.6.2 Where the compound is to be applied to cement concrete pavement, a sealing primer as recommended by the manufacturer, shall be applied to the pavement in advance of placing of the stripes to ensure proper bonding of the compound. On new concrete surface any laitance and/or curing compound shall be removed before the markings are applied.

803.6.3 The thermoplastic material shall be applied hot either by screeding or extrusion process. After transfer to the laying apparatus, the material shall be laid at a temperature within the range specified by the manufacturer for the particular method of laying being used. The paint shall be applied using a screed or extrusion machine.

803.6.4 The pavement temperature shall not be less than 10°C during application. All surfaces to be marked shall be thoroughly cleaned of all dust, dirt, grease, oil and all other foreign matter before application of the paint.

The material, when formed into traffic stripes, must be readily renewable by placing an overlay of new material directly over an old line. Such new material shall so bond itself to the old line that no splitting or separation takes place.

Thermoplastic paint shall be applied in intermittent or continuous lines of uniform thickness of at least 2.5 mm unless specified otherwise. Where arrows or letters are to be provided, thermoplastic compound may be hand-sprayed. In addition to the beads included in the material, a further quantity of glass beads of Type 2, conforming to the above noted Specification shall be sprayed uniformly into a mono-layer on to the hot paint line in quick succession of the paint spraying operation. The glass beads shall be applied at the rate of 250 grams per square metre area.

803.6.5 The minimum thickness specified is exclusive of surface applied glass beads. The method of thickness measurement shall be in accordance with Appendices B and C of BS:3262 (Part 3).

803.6.6 The markings shall be done to accuracy within the tolerances given below:

i) Width of lines and other markings shall not deviate from the specified width by more than 5 percent.

ii) The position of lines, letters, figures, arrows and other markings shall not deviate from the position specified by more than 20 mm

iii) The alignment of any edge of a longitudinal line shall not deviate from the specified alignment by more than 10 mm in 15 m.

iv) The length of segment of broken longitudinal lines shall not deviate from the specified length by more than 150 mm.

In broken lines, the length of segment and the gap between segments shall be as indicated on the drawings; if these lengths are altered by the Engineer, the ratio of the lengths of the painted sections shall remain the same.

803.6.7 Properties of Finished Road Markings

The finished lines shall be free from ruggedness on sides and ends and be parallel to the general alignment of the carriageway. The upper surface of the lines shall be level, uniform and free from streaks.

a) The stripe shall not be slippery when wet.

b) The marking shall not lift from the pavement in freezing weather.

c) After application and proper drying, the stripe shall show no appreciable deformation or discoloration under traffic and under road temperatures upto 60°C.

d) The marking shall not deteriorate by contact with sodium chloride, calcium chloride or oil dripping from traffic.

e) The stripe or marking shall maintain its original dimensions and position. Cold ductility of the material shall be such as to permit normal movement with the road surface without chopping or cracking.

f) The colour of yellow marking shall conform to IS Colour No. 356 as given in IS:164

803.6.8 Measurements for Payment

803.6.8.1 The painted markings shall be measured in sq. metres of actual area marked (excluding the gaps, if any).

803.6.8.2 In respect of markings like directional arrows and lettering, etc., the measurement shall be by numbers.

803.6.9 Rate

The Contract unit rate for road markings shall be payment in full compensation for furnishing all labour, materials, tools, equipment, including all incidental costs necessary for carrying out the work at the site conforming to these Specifications complete as per the approved drawing(s) or as directed by the Engineer and all other incidental costs necessary to complete the work to these Specifications.

803.7 Cold Applied Reflective Paint

803.7.1 General

The work shall consist of marking traffic stripes using a solvent based cold applied paint, which shall be applied on the asphalt/cement concrete road surface by brush or by Road Marker (Spray equipment capable of spraying the paint on the road). Glass beads shall be

subsequently spread pneumatically on to the paint when it is still wet so that the beads will be firmly held by the paint after drying. Colour of the paint shall be white or yellow (IS Colour No. 356) as specified in the drawings or as directed by the engineer.

803.7.2 Material

803.7.2.1 The cold applied paint material shall be homogeneously composed or binder, pigment, extenders and other additives as required for the formulation.

803.7.2.2 Composition

The pigments and extenders shall be uniformly dispersed in the binder medium dissolved in organic solvents. The material shall be free from skin, dirt and foreign objects and shall comply with requirements indicated in Table 800-11.

Table 800-11 : Proportions of Constituents or Paints (Percentage by Weight)

Component	White	Yellow
Binder	25.0 min.	18.0 min.
Titanium Dioxide	20.0 min.	- -
Calcium Carbonate and Inert Fillers	16.0 min.	29.0 min.
Yellow Pigments	- -	14.0 min.

803.7.2.3 Properties

Non-Volatile Matter content by weight shall be a minimum of 65 percent as determined in accordance with test method ASTM D1644. The liquid paint shall have a density of 1.3 g/cc minimum as determined in accordance with test method ASTM D1475.

803.7.2.4 Appearance

Drying Time of the paint as determined by the test method ASTM D711 shall be a maximum of 20 minutes at a wet film thickness of 350 micron. The paint shall set to bear traffic after 40 minutes when the ambient temperature is higher than 24°C. The paint shall not be applied when the surface temperature of the road is higher than 40°C.

803.7.2.5 Properties of the Dried Paint Film

When tested using a sand abrasion tester as described in ASTM D968, the quantity of sand required for removal of a 75 micron thick unbeaded dry film shall be greater than 65 litres.

803.7.2.6 Elongation

The unbeaded dry film shall pass the test in accordance with ASTM D 1737 and ASTM D 2205.

803.7.2.7 Water Resistance

The unbeaded dry film shall pass the test in accordance with ASTM D1647 and ASTM D2205.

803.7.2.8 Skid Resistance

Skid resistance for the beaded dry film shall be not less than 45 as per BS 6044.

803.7.2.9 Storage Life

The material shall meet the specifications for a period of one year. During this period, the paint material when stored in an airtight container shall not form skin. The material shall also not form a cake at the bottom of the container.

803.7.2.10 Minimum Thickness of the Unbeaded Cold Applied Paint Coat

The minimum thickness of the wet unbeaded coat of paint shall not be less than 400 micron, and the minimum thickness of the dry unbeaded coat of paint shall not be less than 200 microns.

803.7.2.11 Retro-reflective Properties

The co-efficient of retro-reflection as per British Standards BS EN 1436:1998 shall be as under:

For white paint (Beaded)	-300 mcd/m^2/lux on application
	-100 mcd/m^2/lux after defect liability period of one year
For yellow paint (Beaded)	-200 mcd/m^2/lux on application
	-100 mcd/m^2/lux after defect liability period of one year

The luminous Co-efficient as per British Standards BS EN 1436:1998 shall be as under:

For white paint (Un-beaded)	100 mcd/m^2/lux on application
For yellow paint (Un-beaded)	80 mcd/m^2/lux on application

803.7.3 Marking

Each container of the cold-paint shall be clearly and indelibly marked with the following information:

i) The name, trade/patent mark

ii) Batch No.

iii) Month of Manufacture

iv) Colour (White or Yellow)

803.7.4 Sampling and Testing

The cold applied reflective road marking paint shall be sampled and tested in accordance with appropriate ASTM/BS test methods.

The contractor shall furnish to the Engineer a copy of certified test methods from the manufacturer of cold applied reflective road marking paint showing the results of:

a) No pick up time as per ASTM D 711.

b) Resistance to wear as per ASTM D 4060 or as per ASTM D 968 from approved laboratories.

c) material safety data sheet shall be obtained from the manufacturer and kept with the paint materials.

803.7.5 Reflectorising Glass Beads

803.7.5.1 General

Reflection shall be achieved by pneumatically spreading glass beads on to the paint when it is still wet. The beads shall be firmly held by the paint after drying.

803.7.5.2 The glass beads shall be transparent, colourless and free from milkiness, dark particles and excessive air inclusions. These shall conform to the requirements spelt out in Clause 803.6.7.3.

803.7.5.3 Specific Requirements

i) **Gradation:** The glass beads shall meet the gradation requirements as per No. 4 of BS:6088 as given in Table 800-12.

Table 800-12 : Gradation Requirements for Glass Beads

Sieve Size	Percentage Retained
250 micron	0-10
150 micron	80-100
Below 150 micron	0-20

ii) **Roundness:** The glass beads shall have a minimum of 70 percent true Spheres.

iii) **Refractive Index:** The glass beads shall have a minimum refractive Index of 1.50.

iv) **Free Flowing Properties:** The glass beads shall be free of hard lumps, clusters and shall dispense readily under any conditions suitable for paint striping. They shall pass the free flow-test as given in Clause 803.6.5.4.

803.7.5.4 Test Methods

The specific requirements shall be tested with the following methods:

i) **Free-Flow Test:** Spread 100 grams of beads evenly in a 100 mm diameter glass dish. Place the dish in a 250 mm inside diameter dessicator which is filled within 25 mm of the top of a dessicator plate with sulphuric acid water solution (specific gravity 1.10). Cover the dessicator and let it stand for 4 hours at 20°C to 29°C. Remove sample from dessicator, transfer beads to a pan and inspect for lumps or clusters. Then pour beads into a clean, dry glass funnel having a 100 mm stern and 6 mm orifice. If necessary, initiate flow by lightly tapping the funnel. The glass spheres shall be free of lumps and clusters and shall flow freely through the funnel.

ii) The requirements of gradation, roundness and refractive index of glass beads and the amount of glass beads in the compound shall be tested as per BS:6088 and BS:3262(Part-1)

iii) The Contractor shall furnish to the Engineer a copy of certified test reports from the manufacturer of glass beads obtained from a reputed laboratory showing results of all tests specified herein and shall certify that the material meets all requirements of these Specifications. However, if so required, these tests may be carried out as directed by the Engineer.

803.7.5.5 Preparation

The cold applied reflective road marking paint shall be stirred well to form homogeneously with the thinner recommended/supplied by the manufacturer and put into the machine with the consistency level recommended by the machine manufacturer by using proper viscometers. The thinner shall not be added more than that recommended by the manufacturer to avoid bleeding.

803.7.5.6 Application

803.7.5.6.1 Marking shall be done by machine. For locations where painting can not be done by machine, approved manual methods shall be used with prior approval of the

Engineer. The Contractor shall maintain control over traffic while painting operations are in progress so as to cause minimum inconvenience to traffic compatible with protecting the workmen.

803.7.5.6.2 The cold applied paint shall be applied on the asphalt/cement concrete road surface by brush or by Road Marker/Spray equipment capable of spraying the paint on the road surface. Glass beads @ 300 gms per sq.m shall be subsequently spread pneumatically on to the paint when it is still wet so that the beads will be firmly held by the paint after drying.

803.7.5.6.3 The pavement temperature shall not be more than 40°C during application. All surfaces to be marked shall be thoroughly cleaned of all dust, dirt, grease oils and all other foreign matter before application of paint.

803.7.5.6.4 The material, when formed into traffic stripes, must be readily renewable by placing an overlay of a new material directly over an old line. Such new material shall so bond itself to the old line that no splitting or separation takes place.

803.7.5.6.5 Cold applied paint shall be applied in intermittent or continues lines of uniform thickness of at least 200 micron of unbeaded dry film thickness unless specified otherwise. When arrows or letters are to be provided, cold applied paint may be applied manually. In addition to the beads recommended for, a further quantity of 300 gms of glass beads per sqm. conforming to the specification shall be sprayed uniformly in to a mono-layer on to the cold paint line in quick succession of the cold paint spraying operation.

803.7.5.6.6 The minimum. thickness specified above in Clause 803.7.5.5.5 is exclusive of surface applied glass beads.

803.7.5.6.7 The finished line shall be free from ruggedness on sides and ends and be parallel to general alignment of the carriage way.

The upper surface of the lines shall be of uniform level and free from streaks.

803.7.5.7 Properties of Finished Road Marking

As per Clause 803.6.7.

803.7.6 Measurement for Payments

As per Clause 803.5.2.1.

803.7.7 Rate

As per Clause 803.5.3.

803.8 Audible and Vibratory Pavement Markings

803.8.1 Description

The work shall involve application of audible and vibratory pavement markings in accordance with the drawings or the direction of the Engineer.

803.8.2 Materials

Thermoplastic: thermoplastic material shall meet the requirements of Clause 803.4.1 of these Specifications.

Glass Spheres: Use glass spheres meeting the requirements of Clause 803.4.2. The Engineer will take random samples of glass spheres in accordance with ASTM D 1214 and the Department's Sampling, Testing and Reporting Guide schedule.

803.8.3 Equipment

The equipment capable of providing continuous, uniform heating of the striping material to temperatures exceeding 200°C, mixing and agitating the material in the reservoir shall be used to provide a homogenous mixture without segregation. Equipment will maintain the striping material in a plastic state, in all mixing and conveying parts, including the line dispensing device until applied. Equipment shall be capable of producing a consistent pattern of transverse bars positioned at regular and predetermined intervals. It shall meet the following requirements:

a) capable of travelling at a uniform rate of speed, both uphill and downhill, to produce a uniform application of striping material and capable of following straight lines and making normal curves in a true arc.

b) capable of applying glass spheres to the surface of the completed stripe by automatic sphere dispensers attached to the striping machine such that the glass spheres are dispensed closely behind the installed line. The glass sphere dispensers should be equipped with an automatic cut-off control that is synchronized with the cut-off of the thermoplastic material and applies the glass spheres uniformly on the entire traffic stripe surface with 50 percent to 60 percent embedment equipped with a special kettle for uniformly heating and melting the striping material.

c) equipped with special kettle for uniformly heating and melting the stripping material. The kettle must be equipped with an automatic temperature control device and material thermometer for positive temperature control and to prevent overheating or scorching of the thermoplastic material.

d) meets the requirements of the fire safety standards.

803.8.4 Application

803.8.4.1 General

Before applying traffic stripes and markings, any material that would adversely affect the bond of the traffic stripes shall be removed by a method approved by the Engineer.

Before applying traffic stripes to any portland cement surface, a primer, sealer or surface preparation adhesive of the type recommended by the manufacturer shall be applied. Longitudinal lines should be offset by at least 50 mm from construction joints of Portland cement concrete pavement.

Traffic stripes or markings shall be applied only to dry surface, and when the ambient air and surface temperature is at least 10°C and rising for asphalt surfaces and 16°C and rising for concrete surface.

Striping shall be applied to the same tolerances in dimensions and in alignment. When applying traffic stripes and marking over existing markings, ensure that not more than 50 mm on either end and not more than 25 mm on either side of the existing line is visible.

803.8.4.2 Thickness

Base lines shall be applied having a thickness of 2 mm to 2.2 mm exclusive of the transverse audible bars, when measured above the pavement surface at the edge of the base line.

As an alternative to the flat base line, a profiled baseline meeting the following dimensions may be applied. The profiled baseline shall have a minimum height of 4 mm, when measured above the pavement surface at the edge of the inverted rib profile. The thickness in the bottom of the profile marking shall be 0.9 mm to 1.3 mm. The individual profiles shall be located transversely across the full width of the traffic stripe at approximately 25 mm. On center, with a bottom width between 2.5 mm and 8 mm.

803.8.5 Dimensions of Transverse Audible Bars

The raised transverse bars shall be applied with a profile such that the leading and trailing edges are sloped at a sufficient angle to create an audible and vibratory warning,

Transverse bars on shoulder and centerline markings shall have a height of 11 mm to 14 mm, including the base line. The height shall be measured above the pavement surface at the edge of the marking, after application of drop-on glass spheres. The bars shall have an approximate length of 65 mm. The bars may have a drainage channel on each bar, the width of each drainage channel will not exceed 6.5 mm at the bottom of the channel. The longitudinal distance between bars shall be 750 mm.

803.8.6 Retro-reflectivity

White and yellow audible and vibratory markings shall attain an initial retro reflectance of not less than 300 mcd/1xm^2 and not less than 250 mcd/1x m^2, respectively.

803.8.7 Glass Spheres

Glass spheres shall be applied to all markings. The manufacturer shall determine if a single or double application of glass spheres is used and the recommended drop rates for each application shall be adopted.

803.8.8 Contractor's Responsibility

The Engineer shall be notified by the contractor, prior to the placement of audible and vibratory markings. The contractor shall furnish the Engineer with the manufacturer's name and LOT numbers of the thermoplastic materials and glass spheres to be used. He will ensure that the LOT numbers appear on the thermoplastic materials and glass spheres packages. The contractor shall furnish a copy of certified test reports to the Engineer, showing results of tests specified in these Specifications or as per appropriate ASTM/BS method. The Engineer would have the right to test the markings within 3 days of receipt of the Contractor's certification. If the retro reflectivity values measure less than the values shown above, it shall be removed and the stripping reapplied.

803.8.9 Protection of Newly Applied Audible and Vibratory Markings

Traffic shall not be allowed onto or vehicles permitted to cross newly applied pavement markings until they are sufficiently dry. Any portion of the pavement markings damaged by passing traffic or from any other cause shall be removed and replaced.

803.8.10 Observation Period

Pavement markings shall be subject to a 180 day observation period under normal traffic. The observation period will begin with the satisfactory completion and acceptance of the pavement marking work. The pavement markings shall show no signs of failure during the observation period. Any pavement markings that do not perform satisfactorily under traffic during the 180 day observation period, shall be replaced by the contractor at his own cost.

803.8.11 Measurement for Payment

Audible and vibratory pavement markings shall be measured in linear metre. Payments will be full compensation for all work specified in this Section, including, all cleaning and preparing of surfaces, furnishing of all materials, application, curing and protection of all items, protection of traffic, furnishing of all tools, machines and equipment, and all incidentals necessary to complete the work.

804 REFLECTIVE PAVEMENT MARKERS (ROAD STUDS) AND SOLAR POWERED ROAD MARKERS (SOLAR STUDS)

804.1 Scope

The work shall cover the providing and fixing of reflective pavement marker (RPM) or road stud, a device which is bonded to or anchored within the road surface, for lane marking and delineation for night-time visibility, as specified in the Contract.

804.2 Material

804.2.1 Plastic body of RPM/road stud shall be moulded from ASA (Acrylic Styrene Acrylonitrite) or HIPS (Hi-impact Polystyrene) or Acrylonitrile Butadiene Styrene (ABS) or any other suitable material approved by the Engineer. The markers shall support a load of 13,635 kg tested in accordance with ASTM D 4280.

804.2.2 Reflective panels shall consist of number of lenses containing single or dual prismatic cubes capable of providing total internal reflection of the light entering the lens face. Lenses shall be moulded of methyl methecrylate conforming to ASTM D 788 or equivalent.

804.3 Design

The slope or retro-reflecting surface shall preferably be 35 ± 5° to base and the area of each retro-reflecting surface shall not be less than 13.0 sq.cm.

804.4 Optical Performance

804.4.1 Unidirectional and Bi-directional Studs

Each reflector or combination of reflectors on each face of the stud shall have a Coefficient of Luminous Intensity (C.I.L). not less than that given in Tables 800-13 or 800-14 as appropriate.

804.4.2 Omni-directional Studs

Each Omni-directional stud shall have a C.I.L. of not less than 2 mcd/lx.

Table 800-13 : Minimum C.I.L. Values for Category 'A' Studs

Entrance Angle	Observation Angle	C.I.L. in mcd/lx		
		White	Amber	Red
0° U 5° L &R	0.3°	220	110	44
0° U 10° L&R	0.5°	120	60	24

Table 800-14 : Minimum C.I.L. Values for Category 'B' Studs

Entrance Angle	Observation Angle	C.I.L. in mcd/lx		
		White	Amber	Red
0° U 6° L&R	0.3°	20	10	4
0° U 10° L&R	0.5°	15	7.5	3

Note :

1) The entrance angle of 0° U corresponds to the normal aspect of the reflectors when the reflecting road stud is installed in horizontal road surface.

2) The stud incorporating one or more corner cube reflectors shall be included in Category 'A'. The stud incorporating one or more bi-convex reflectors shall be included in Category 'B'.

804.5 Tests

804.5.1 Co-efficient of luminance intensity can be measured by procedure described in ASTM E 809 "Practice for Measuring Photometric Characteristics" or as recommended in BS:873-Part 4: 1973.

804.5.2 Under test conditions, a stud shall not be considered to fail the photometric requirements if the measured C.I.L. at any one position of measurement is less than the values specified in Tables 800-13 or 800-14 provided that

i) the value is not less than 80 percent of the specified minimum, and

ii) the average of the left and right measurements for the specific angle is greater than the specified minimum.

804.6 Solar Powered Road Markers (Solar Studs)

The solar studs shall be made of Aluminium alloy and poly carbonate material which shall be absolutely weather resistant and strong enough to support a load of 13,635 kg tested in accordance with ASTM D4280. Its colour may be white, red, yellow, green or blue or combination as directed by the Engineer. Its water resistance shall meet the requirements of IP 65 in accordance with IS:12063:1987 Category 2 for protection against water ingress. The dimensions of solar studs shall not be less than 100 mm x 100 mm x 10 mm. It shall have super bright LEDs so as to provide long visibility from a distance of more than 800 m. Its flashing rate shall not be less than 1 Hz. Its should be able to give the prescribed performance in the temperature range of -40°C to +55°C. Its life shall be not less than 3 years.

804.7 Fixing of Reflective Markers

804.7.1 Requirements

The enveloping profile of the head of the stud shall be smooth and the studs shall not present any sharp edges to traffic. The reflecting portions of the studs shall be free from crevices

or ledges where dirt might accumulate. Marker height shall not be less than 10 mm and shall not exceed 20 mm. and its width shall not exceed 130 mm. The base of the marker shall be flat within 1.3 mm. If the bottom of the marker is configured, the outermost faces of the configurations shall not deviate more than 1.3 mm from a flat surface. All road studs shall be legibly marked with the name, trade mark or other means of identification of the manufacturer.

804.7.2 Placement

The reflective marker shall be fixed to the road surface using the adhesives and the procedure recommended by the manufacturer. No nails shall be used to affix the marker so that they do not pose safety hazard on the roads. Regardless of the type of adhesive used, the markers shall not be fixed if the pavement is not surface dry and on new asphalt concrete surfacing until the surfacing has been opened to traffic for a period of not less than 14 hours. The portions of the highway surface, to which the marker is to be bonded by the adhesive, shall be free of dirt, curing compound, grease, oil, moisture, loose or unsound layers, paint and any other material which would adversely affect the bond of the adhesive.

The adhesive shall be placed uniformly on the cleaned pavement surface or on the bottom of the of the marker in a quantity sufficient to result in complete coverage of the area of contract of the marker with no voids present and with a slight excess after the marker has been lightly pressed in place. For epoxy installations, excess adhesive around the edge of the marker, excess adhesive on the pavement and adhesive on the exposed surfaces of the markers shall be immediately removed.

804.7.3 Warranty and Durability

The contractor shall submit a two year warranty for satisfactory field performance including stipulated retro-reflectance of the reflecting panel, to the Engineer. In addition, a two year warranty for satisfactory infield performance of the finished road marker shall also be given by the contractor who carries out the work of fixing of reflective road markers. In case the markers are displaced, damaged, get worn out or lose their reflectivity compared to stipulated standards, the contractor would be required to replace all such markers within 15 days of the intimation from the Engineer, at his own cost.

804.8 Measurement for Payment

The measurement of reflective road markers/solar powered road studs shall be in numbers of different types of markers supplied and fixed.

804.9 Rate

The contract unit rate for reflective road markers/solar powered road studs shall be payment in full compensation for furnishing all labour, material, tools, equipment including incidental

costs necessary for carrying out the work at site conforming to the specification complete as per approved drawings or as directed by the Engineer.

805 DISTANCE INDICATOR POSTS

805.1 Scope

The work shall cover the supply, painting, lettering and fixing of distance indicator stones along the highway to assist the drivers/users in estimating the distance travelled or remains to be travelled to reach destination, to identify incident location and to provide assistance in maintenance and operations. These devices shall show Hectometre, Kilometre and 5th Kilometres as the case may be.

805.2 These posts shall be in accordance with those prescribed in IRC:26 "Type Designs for 200 Metre Stones" and IRC:8 "Type Designs for Highway Kilometre Stones". They may also be provided in the form of sign systems on highways and roads.

805.3 The material may be made of local stones, concrete or any other material available locally and approved by the Engineer for the devices in accordance with the IRC:26 and IRC:8. For the device(s) provided as the sign system, the material shall be same as that for a traffic sign with retro-reflective sheeting; rectangular in shape (longer side vertical), with colour scheme as that for Advance Direction/Destination signs. The signs shall contain 250 mm white numerals on a 300 mm wide blue or green background (as the case may be) with white border. They shall be 600, 900 or 1200 mm in height for one, two or three digits respectively and shall contain the abbreviation km in 100 mm white letters so that they are clearly visible to approaching vehicle driver from a distance of at least 100 m. They shall be mounted at a minimum height and lateral placement as that for delineators. These devices shall be bedded into the ground with adequate foundations as indicated in the drawings or in the relevant IRC Specifications or as directed by the Engineer. The orientation and location of the devices shall be as indicated in the drawings or in the relevant IRC Specifications or as directed by the Engineer.

805.4 Measurements for Payment

The measurement will be in numbers of 200 metre, kilometer and 5th kilometer distance indicator posts fixed at site, complete job as per these Specifications or as directed by the Engineer.

805.5 Rate

The Contract unit rate for hectometer/kilometer/5th kilometer distance measurement posts shall be payment in full compensation for furnishing all labour, materials, tools, equipment

and making, painting and lettering and fixing at site and all other incidental costs necessary to complete the work to these Specifications.

806 ROAD DELINEATORS

806.1 Scope

The work shall cover supplying and fixing roadway indicators, hazard markers and object markers. Roadway indicators shall be properly installed to indicate the horizontal alignment and vertical profile of the roadway so as to outline the vehicle path for safe driving. Hazard markers shall be installed immediately ahead of obstruction of vehicular path such as just before a narrow bridge. Object markers shall be erected where obstruction within the roadway starts such as chennelising island in approaches to intersections.

806.2 The design, materials to be used and the location of the road delineators (roadway indicators, hazard markers and object markers) shall conform to Recommended Practice for Road Delineators, IRC:79, and to relevant drawings or as otherwise directed by the Engineer. The steel drums such as empty bitumen drums shall not be used as they could pose safety hazards, The delineators shall be retro-reflectorised as shown on the drawings or as directed by the Engineer. The reflectors on the delineators shall be of retro-reflective sheeting with encapsulated lens and with the visibility of 300 m under clear weather conditions, when illuminated by the upper beam of the car headlights.

806.3 Installation

The delineators shall be so installed that their posts do not change their orientation and the reflectorised faces are always perpendicular to the direction of travel.

806.4 Measurement for Payments

The measurement shall be made in number of delineators supplied and fixed at site.

806.5 Rates

The Contract unit rates of delineators shall be payment in full compensation for furnishing all labour, materials, tools, equipment including incidental costs necessary to complete the work to these Specifications.

807 BOUNDARY STONES

807.1 Scope

The work shall cover supply and fixing boundary stones as per designs and Specifications given in IRC:25 "Type Designs for Boundary Stones" and at locations indicated in the drawings or as directed by the Engineer. The material to be used shall conform to IRC:25.

807.2 Measurements for Payment

The measurement shall be made in numbers of boundary stones supplied and fixed at site.

807.3 Rate

The Contract unit rate for boundary stones shall be full compensation for furnishing all labour, materials, tools, equipment for preparing, supplying and fixing and all other incidental costs necessary to complete the work to these Specifications.

808 FENCING

808.1 Scope

The work shall cover supply and installation of chain link fencing or barbed wire fencing with its fixing on GI pipe posts or RCC posts and providing necessary stays and entry gates as shown in the drawing(s) and/or as directed by the Engineer.

808.2 The GI posts shall conform to IS:1239. The GI pipe posts shall be embedded in concrete to a sufficient depth below ground as indicated in the drawings. The steel shall be fabricated and painted to conform to Section 1900 of these Specifications.

808.3 The chain link fencing shall conform to ASTM F 1553–06. They shall be firmly secured to the posts such that the whole fencing remains intact.

808.4 Entry gate(s) shall be made of GI pipes or other metal as per the design shown in the drawing(s).

808.5 The concrete in R.C.C. posts shall conform to M 25 grade or as indicated in the drawings. The requirements of Section 1700 shall govern. Steel for reinforcement shall meet the requirements of Section 1600. The barbed wire fencing shall be galvanised steel barbed wire conforming to IS:278-1978.

808.6 Measurement for Payment

The measurement shall be in running metre of fencing including the entry gates.

808.7 Rate

The Contract unit rate for fencing shall be payment in full compensation for furnishing all labour, materials, tools, equipment for fabrication and fixing at site and all other incidental costs necessary to complete the work to these Specifications.

809 TUBULAR STEEL RAILING

809.1 Scope

The work shall cover supply, fixing and erecting tubular steel railings as shown on the drawings and/or as directed by the Engineer.

809.2 The railing shall be of tubular steel in conformance to IS:1239. the fabrication and painting except for the final coat shall be completed before dispatch to the site. Prior to the painting, all surfaces shall be grit blasted to the satisfaction of the Engineer and pickled. The priming coat of paint shall be applied as soon as the steel has dried.

809.3 The posts shall be vertical and of the type as shown in the drawing with a tolerance not exceeding 6 mm in a length of 3 m. The railing shall be erected true to line and grade.

809.4 Measurement for Payment

The railing shall be measured in linear metre from end to end along the face of the railing, including end and intermediate posts, with no deduction for gaps as shown on the drawings.

809.5 Rate

The Contract unit rate for Tubular Steel Railing shall be payment in full compensation for furnishing all labour, materials, tools, equipment and plant required for fabrication, connection, oiling, painting, temporary erection, inspection, test and final erection at site and all other incidental costs necessary to complete the work to these Specifications.

810 STRUCTURAL STEEL RAILING

810.1 Scope

The work shall cover supply, fixing and erecting structural steel railings as shown in the drawings and/or as directed by the Engineer.

810.2 Materials

The structural sections such as angles, flats, rectangular hollow sections etc. shall conform to Section 1900. They shall be painted or galvanised as specified in the Contract.

810.3 Measurement for Payment

The railing shall be measured in linear metre including end and intermediate posts.

810.4 Rate

The contract unit rate for railing shall be payment in full compensation for furnishing materials, labour, tools and equipment required for fabrication, connection, oiling, painting, galvanising, erection, test and all other incidentals necessary to complete the work to these Specifications.

811 CRASH BARRIERS

811.1 Scope

The work shall consist of construction, provision and installation of crash barriers at locations as shown in the drawing or as directed by the Engineer. The type of the crash barrier shall be as specified in the Contract.

811.2 Concrete Crash Barrier

811.2.1 Materials

811.2.1.1 All materials shall conform to Section 1000 Materials for Structures as applicable, and relevant Clauses in Section 1600 shall govern the steel reinforcement.

811.2.1.2 The minimum grade of concrete shall be M25.

811.2.2 Construction Operations

811.2.2.1 The concrete barriers shall be either (i) precast or (ii) constructed by the "cast-in-place with fixed forms" method or the "extrusion or slip form" method or a combination thereof at the Contractor's option with the approval of the Engineer. Where "extrusion or slip form" method is adopted full details of the method and literature shall be furnished.

811.2.2.2 The concrete barrier may be precast in lengths upto 6 m depending upon the feasibility of transport and lifting arrangements. Longitudinal roadside concrete barrier shall be placed on adequate bedding as detailed in the drawing. The top and exposed faces of the barriers shall conform to the specified tolerances, as defined in Clause 810.2.2.3, when tested with 3 m straight edge, laid on the surface.

An expansion joint with pre-moulded asphalt filler board shall be provided at the junctions of crash barrier on structure and crash barrier on the fill. The crash barrier on the fill shall

be constructed in pieces of length not exceeding 20 m, with pre-moulded asphalt filler board joints.

Backfilling to the concrete barriers shall be compacted in layers to the compaction of the surrounding earthwork.

811.2.2.3 Tolerance

The overall horizontal alignment of rails shall not depart from the road alignment by more than ± 30 mm, nor deviate in any two successive lengths from straight by more than 6 mm and the faces shall not vary more than 12 mm from the edge of a 3 m straight edge. Barriers shall be at the specified height as shown in the plans above the edge of the nearest adjacent carriageway or shoulder, within a tolerance of ± 30 mm.

811.2.3 End Treatment

The road side concrete barrier shall be provided with an end treatment by tapering the height of terminating end within a length of 8 m to 9 m. Median crash barrier shall be terminated sufficiently away from the median opening. It shall be provided with an end treatment, which shall be obtained by tapering the height of terminating end of the median barrier within a length of 8 m to 9 m.

811.2.4 Measurement for Payment

All barriers shall be measured by linear metres of completed and accepted length in place, corresponding end to end along the face of concrete barriers including approach and departure ends.

811.2.5 Rate

The Contract unit rate shall include full compensation for furnishing all labour, materials including steel for reinforcement tools, equipment and incidental costs necessary for doing all the work involved in constructing the concrete barrier complete in place in all respects as per these Specifications.

811.3 Metal Beam Crash Barrier

811.3.1 Materials

811.3.1.1 Metal beam rail shall be corrugated sheet steel beams of the class, type, section and thickness indicated on the drawings. Railing posts shall be made of steel of the section, weight and length as shown on the drawings. All complete steel rail elements,

terminal sections, posts, bolts, nuts, hardware and other steel fittings shall be galvanized. All elements of the railing shall be free from abrasions, rough or sharp edges and shall not be kinked, twisted or bent.

811.3.1.2 The "W" beam type safety barrier shall consist of a steel post and a 3 mm thick "W" beam rail element. The steel post and the blocking out spacer shall both be channel section of 75 mm x150 mm & size 5 mm thick. The rail shall be 70 cm above the ground level and posts shall be spaced 2 m center-to-center. Double "W" beam barrier shall be as indicated in IRC:5-1998.

The thrie beam safety barrier shall have posts and spacers similar to the ones mentioned above for "W" beam type. The rail shall be placed at 85 cm above the ground level.

The "W" beam, the thrie beam, the posts, spacers and fasteners for steel barriers shall be galvanized by hot dip process (zinc coated, 0.55 kg per square metre; minimum single spot) unless otherwise specified. The galvanizing on all other steel parts shall conform to the relevant IS Specifications. All fittings (bolts, nuts, washers) shall conform to the IS:1367 and IS:1364. All galvanizing shall be done after fabrication.

811.3.1.3 Concrete for bedding and anchor assembly shall conform to Section 1700 of these Specifications.

811.3.2 Construction Operations

811.3.2.1 The line and grade of railing shall be true to that shown on the plans. The railing shall be carefully adjusted prior to fixing in place, to ensure proper matching at abutting joints and correct alignment and camber throughout their length. Holes for field connections shall be drilled with the railing in place in the structure at proper grade and alignment.

811.3.2.2 Unless otherwise specified on the drawing, railing steel posts shall be given one shop coat of paint (primer) and three coats of paint on structural steel after erection, if the sections are not galvanized. Any part of assembly below ground shall be painted with three coats of red lead paint.

811.3.2.3 Splices and end connections shall be of the type and designs specified or shown on the plans and shall be of such strength as to develop full design strength of the rail elements.

811.3.3 Installation of Posts

811.3.3.1 Holes shall be dug or drilled to the depth indicated on the plans or posts may be driven by approved methods and equipment, provided these are erected in proper position and are free from distortion and burring or any other damage.

811.3.3.2 All post holes that are dug or drilled shall of such size as will permit proper setting of the posts and allow sufficient room for backfilling and tapping.

811.3.3.3 Holes shall be backfilled with selected earth or stable materials in layers not exceeding 100 mm thickness and each layer shall be thoroughly tamped and rammed. When backfilling and tamping are completed, the posts or anchors shall be held securely in place.

811.3.3.4 Post holes that are drilled in rock and holes for anchor posts shall be backfilled with concrete.

811.3.3.5 Posts for metal beam guardrail on bridges shall be bolted to the structure as detailed on the plans. The anchor bolts shall be set to proper location and elevation with templates and carefully checked.

811.3.4 Erection

811.3.4.1 All guard rail anchors shall be set and attachments made and placed as indicated on the plans or as directed by the Engineer.

811.3.4.2 All bolts or clips used for fastening the guardrail or fittings to the posts shall be drawn up tightly. Each bolt shall have sufficient length to extend at least 6 mm through and beyond the full nut, except where such extensions might interfere with or endanger traffic in which case the bolts shall be cut off flush with the nut.

811.3.4.3 All railings shall be erected, drawn and adjusted so that the longitudinal tension will be uniform throughout the entire length of the rail.

811.3.5 End Treatment for Steel Barrier

811.3.5.1 End treatments shall from an integral part of safety barriers which should not spear, vault or roll a vehicle for head-on or angled impacts. The two end treatments recommended for steel barriers are "Turned-down-guardrail" and "Anchored in back slope", as shown on the drawings or as directed by the Engineer.

811.3.6 Tolerance

The posts shall be vertical with a tolerance not exceeding 6 mm in a length of 3 m. The railing barrier shall be erected true to line and grade.

811.3.7 Measurements for Payment

811.3.7.1 Metal beam railing barriers will be measured by linear metre of completed length as per plans and accepted in place. Terminals/anchors of various types shall be paid for by numbers.

811.3.7.2 Furnishing and placing anchor bolts and/or devices for guard rail posts on bridges shall be considered incidental to the construction and the costs thereof shall be included in the price for other items of construction.

811.3.7.3 No measurement for payment will be made for excavation or backfilling performed in connection with this construction.

811.3.8 Rate

The Contract unit rate shall include full compensation for furnishing of labour, materials, tools, equipments and incidental costs necessary for doing all the work involved in constructing the metal beam railing barrier complete in place in all respects as per these Specifications.

811.4 Wire Rope Crash Barrier

811.4.1 Scope

The work shall consist of providing wire rope safety barriers as per designs provided by the supplier or as shown in the drawings.

811.4.2 Materials and Design

The wire ropes shall be galvanised steel wire, supported by galvanised steel posts at spacing indicated in the drawings. The supplier shall provide calculations in support of the structural details to establish the stability of the barrier against an impact of a heavy commercial vehicle of a gross weight of 36 T, or any weight specified in the Contract.

811.4.3 Measurement for Payment

The wire rope crash barrier shall be measured in linear material including and anchors.

811.4.4 Rate

The Contract unit rate shall include the supply of materials, labour, fittings, installation and anchors for the wire rope barriers.

812 ROAD TRAFFIC SIGNALS

812.1 Scope

The work shall cover supply and installation of Road Traffic Signals.

The traffic signal, its configuration, size and location shall be in accordance with IRC:93 and IS:7537 and as shown in the drawings or as directed by the Engineer. Prior to installation of signals, the Contractor shall submit to the Engineer, for approval, detailed proposals showing the signal type, sizes, paint and structural details of the signal posts including control system.

812.2 The traffic signals shall have a complete electronic mechanism for controlling the operation of traffic with an auxiliary manual controller. The time plan of signals shall be as per drawing and shall be modified as directed by the Engineer.

812.3 Materials

The various materials and fabrication thereof shall conform to the following:

812.3.1 Signal Foundation

The signal foundation shall be constructed as per Specifications given in Clause 13 of IRC:93 or as shown in the drawings.

812.3.2 Construction Requirements

The construction requirements for post, signal head assembly, signal head, optical system, lamp and holder, visor, post, supports for overhead mounted signals, equipment housing, locks, inter-connecting cables, earthing, mains termination, controller electrical components, etc. shall conform to IS:7537 unless otherwise stated in IRC:93. The post shall be painted and protected as per Clause 3.7 of IS:7537.

812.3.3 Optical Requirements

The shape of all signal lenses shall be circular and shall be of specified colour and size and as shown in the drawing. Quality of lenses, arrangements of lenses, illuminations, visibility and shielding of signals shall be as per relevant Clauses of IRC:93 and IS:7537.

812.4 Tests

Tests shall be carried out on all components of traffic signals including tests on complete system for its performance as per relevant Clauses of IRC:93 and IS:7537.

812.5 Maintenance of Traffic Signals

It shall be the responsibility of the Contractor to provide for maintenance of the signal section system throughout the warranty period for at least five (5) years after installation and as per Clause 18 of IRC: 93.

812.6 Measurement for Payment

The measurement for traffic signalization system shall be by unit for complete work as specified and as per drawing for complete road junction.

812.7 Rate

The Contract unit rate for the traffic signalization system as a whole shall be payment in full compensation for furnishing all labour, materials, tools, equipment for preparing, supplying, fixing at site, testing and maintenance throughout warranty period and all other incidental costs necessary to complete and maintain the work to these Specifications.

813 TRAFFIC CONTROL AND SAFETY DEVICES IN CONSTRUCTION ZONE

813.1 Scope

The work shall cover supply and installation at site. Traffic Control Devices in the construction zone comprising of signs delineators, traffic cones, drums, barricades, longitudinal barriers, warning tapes, flagmen, reflective jackets, headgears.

813.2 Signs

Traffic signs shall be in accordance with IRC:67 and in accordance with IRC:SP:55. Its material and other requirements shall be in accordance with Clause 801 of these Specifications.

813.3 Delineators

Delineators in constructions zone are in form of vertical posts, cones, traffic cylinders, tapes, drums etc. Vertical posts shall be in accordance with the provisions contained in IRC:79.

813.4 Traffic Cones

813.4.1 Traffic cones may be of height 500 mm, 750 mm and 1000 mm, and 300 to 500 mm in diameter or in a square shape. They shall be of brilliant red/orange/yellow, ultraviolet stabilized colour for maximum visibility and fade resistance under all weather conditions and ambient working temperature of -30°C to +140°C. The material shall be Linear Low Density Polyethylene (LLDP), plastic or rubber so that there is no damage to the vehicle when they are stuck. Cone and base are to be of one continuous layer to prevent tearing and base separation They should be non-crushable/flexible/tear resistant and UV stabilized and made from non-fading colours. They should return to their original shape in just 20 seconds after being crushed. The bases of cones shall be loaded with ballast (but they should not present a hazard if the cones are inadvertantly struck) or anchored to check their being blown

away. Their base should be designed for easy stacking without sticking . They may have retro-reflective white band and mounted flashing warning light for enhanced night visibility. All traffic cones shall conform to BS:873 (part 8) Catalogue A and the provisional European Standard EN 13422.

813.4.2 The measurement shall be for each piece and payment for each piece.

813.5 Drums

813.5.1 The drums shall be of size 800 mm to 1000 mm in height and 300 mm in diameter. They shall be constructed of lightweight, flexible, and deformable materials of LLDP or plastic so that no damage is caused to the vehicle when stuck. Steel drums shall not be used. They may be of bright red, yellow or white colours. They should be portable enough to be shifted from place to place within a temporary traffic control project to accommodate changing conditions but would remain in place for a prolonged period. The markings on drums shall be horizontal, circumferential, alternative orange and white retro-reflective stripes 100 to 150 mm wide. Each drum shall have a minimum of two orange and two white stripes. Any non-retro reflective spaces between the horizontal orange and white stripes, shall not exceed 50 mm wide. Drums shall have closed tops that will not allow collection of roadwork or other debris. When they are used in regions susceptible to freezing, they should have drainage holes in the bottom so that water will not accumulate and freeze, causing a hazard if struck by a motorist. Ballast shall not be placed on top of drum.

813.5.2 The measurement shall be for each piece and payment for each piece, for providing and maintenance at site as per the direction of the Engineer.

813.6 Barricades

The barricades may be portable or permanent. Barricades may be of wooden, metal or other suitable material panels. They shall be stable under adverse weather conditions and appear significant but not to cause damage to the vehicle if they are stuck. They can be classified in 3 types, namely Type-I, Type-II and Type-III. Type-I and Type-II are portable and Type-III permanent. Because of their vulnerable position and the hazard they could create, they should be constructed of lightweight materials and should have no rigid stay bracing for A-frame designs.

813.6.1 Type-I and Type II Barricade

The rail/panel length shall be 2000 mm to 2500 mm for Type I and 1000 mm to 1200 mm for Type II barricade. The width of rails shall be 200 mm to 300 mm. The rails shall be painted in alternate yellow and white stripes of 150 mm width each, sloping away at an angle of 45° in the direction of traffic. The support shall be on a "A-Configuration" or otherwise at the top to permit convenient folding and staking for transportation. Their stability shall be improved

by ballasting. On highways or in other situations where barricades may be susceptible to overturning in the wind, sandbags shall be used for ballasting. Sandbags may be placed on lower parts of the frame or stays to provide the required ballast but shall not be placed on top of any striped rail. Barricades shall not be ballasted by heavy objects such as rocks or chunks of concrete.

813.6.2 Type-III Barricade

Type-III is the permanent type and may be made of wood, metal or other suitable material. The typical configuration shall include 3 or more panels/rails, of minimum 1000 mm length (maximum length as per site requirement) and 300 mm width each, painted with alternate yellow and white stripe of 150 mm width sloping at an angle of 45°. They shall be supported and secured on 2 or more vertical supports of same material. On highways or in other situations where barricades may be susceptible to overturning in the wind, sandbags should be used for ballasting. Sandbags may be placed on lower parts of the frame or stays to provide the required ballast but shall not be placed on top of any striped rail. Barricades shall not be ballasted by heavy objects such as rocks or chunks of concrete.

813.6.3 Application

813.6.3.1 Type I or Type II barricades shall be used in situations where traffic is maintained through the temporary traffic control zone. They may be used singly or in groups to mark a specific condition, or they may be used in a series for channelizing traffic. Type I barricades normally would be used on conventional roads or urban streets and arterials. Type II barricades have more retro-reflective area and are intended for use on highways and expressways or other high-speed roadways.

813.6.3.2 Type III barricades be used for road closure and may extend completely across a roadway or from kerb to kerb. Where provision is made for access of authorized equipment and vehicles, the responsibility should be assigned to a person to ensure proper closure at the end of each work day.

When a highway is legally closed but access must still be allowed for local traffic, the Type III barricade should not be extended completely across a roadway. A sign with the appropriate legend concerning permissible use by local traffic shall be mounted.

Signs may be erected on barricades, particularly those of the fixed type, that offer a most advantageous facility for this purpose. The ROAD CLOSED and DETOUR or ARROW signs, and the large arrow warning signs, for example, can be mounted effectively on or above the barricade that closes the roadway.

813.7 Longitudinal Safety Barriers

813.7.1 Longitudinal channelising barricades are light weight channelising devices that can be used singly as Type-I, II or III barricades, or connected so that they are highly visible and have good target value. They should be interlocked to delineate or channelise the traffic flow and mark the work zone. The inter-locking barricade wall should not have gaps that allow pedestrians or vehicles to stray from the channelising path. Longitudinal channels barricades are located adjacent to traffic and therefore, are subject to impact by errant vehicles. Because of their vulnerable positions, longitudinal channelising barricades should be constructed of light weight materials and be crash worthy. They shall be of high density polyethylene, non-fading, and high impact and U.V. resistant. They shall be of orange, white or custom colours. Their size should be minimum 1500 mm in length, 1000 mm in height, 600 mm in width. They could be filled with water through an aperture on the top and emptied by removing a plug at the base.

On roads with low speed traffic, GI sheets material could be considered for longitudinal barricades. They shall be firmly secured to vertical support system with no sharp edges to pose any hazard when struck. Their configuration shall be as per the drawing or as directed by the Engineer.

813.7.2 Measurement shall be per running metre of longitudinal barrier and payment for the running metre of complete job of providing, installation and maintenance at site as per the drawing/direction of the Engineer.

813.8 Flagman

813.8.1 The flagmen or flaggers shall be deployed where:

- Workers or equipment intermittently block an unprotected traffic lane,
- One lane is used for two directions of traffic,
- It is considered necessary to guide, warn or control traffic is considered necessary.

The flagman should be alert, intelligent and capable to effectively perform the assigned duties. Flagman shall be provided with hand signalling devices such as flags and sign paddles. Flagmen must be provided with and must wear warning garments, safety headgear, footwear and gloves for their protection and for conspicuity, while flagging. Warning garments worn at night must be of reflective material. Flags for signalling shall be minimum 600 mm x 600 mm and made of good red cloth and securely fastened to a staff of approximately of 1 m. in length. Sign paddles should be at least 600 mm wide provided with a rigid handle. The background colour of STOP should be red and its shape shall be octagonal conforming to IRC:67. The word STOP would be in white colour. Background of SLOW sign should be yellow with black letters and borders.

813.9 Reflective Clothings

813.9.1 In the work zones and construction sites, all the workers, supervisors and inspecting officers shall wear high visibility fluorescent clothings with retro-reflective material, so that their presence is conspicuous from a distance of 300 m. Clothings may be in form of vests, T-shirts, jackets, pants and raincoats etc., depending upon weather conditions and ease of usage. They shall be of bright colours of fluorescent red-orange or fluorescent yellow-green.

813.9.2 The reflective clothing's shall have reflective bands of width appropriate for the garments viz. vests, T-shirts, jackets, pants and raincoats. It shall have 360° visibility with at least one retro-reflective band encircling the torso, There shall be appropriate separation distances of vertical and horizontal bands placed on torso, sleeves and trouser areas. The garment shall be free of roughness and sharp edges so as not to cause excessive irritation and the wearer should get the best possible degree of comfort and protection.

813.9.3 The reflective clothing shall meet the requirements of standards given in IS:15809-2008 or EN 471:2003 The material shall be tested for colour and luminance, colour fastness with cracking, perspiration, laundering and UV light exposure. The material shall meet the requirements of brightness after rainfall performance, temperature variation, abrasion resistance, flexing, cold folding and variation in temperature.

813.9.4 Measurement shall be for the unit piece of clothing and payment for providing and maintaining at site as per direction of the Engineer.

813.10 Personal Protection Equipment for Workers

All the workers, exposed to moving roadway traffic or equipment in road construction zones shall wear high-visibility safety apparel, headgear, boots, gloves and other protective gears for their protection. The safety apparel shall be in accordance with Clause 813.9. The safety headgear or protective helmet shall protect the wearer against falling objects and possible serious injury. It shall address requirements of shock absorption, resistance to penetration, flame resistance, chin strap anchorages, comfortable wearing and shall meet the requirements of IS:2925 or EN 397. The safety shoes or boots shall provide personal protection from any possible hazard posed by the activity being done and provide comfortable wearing without giving any hindrance in the expected tasks. The work gloves shall provide protection against any personal injury that could be caused by the activities to be performed and comfort in wearing without giving any hindrance in the expected tasks. If the worker is to be exposed to dust in the work zone, he shall have respiratory protection by dust mask meeting the requirements of IS:9473-2008. Depending upon the task, workers engaged in welding operations shall have eye protection through passive welding sheet meeting the requirements of EN 175 or auto darkening sheet meeting the requirement of EN 379/EN 169.

813.11 Measurement

The traffic control device of providing traffic signs shall be measured in number. Traffic control devices like barriers and delineators and supply of flagman shall be measured in number and days for which they are used unless specified otherwise in the Contract. Other traffic control devices such as drums, cones, warning tapes, reflective jackets, headgears for workmen shall be considered incidental to the work.

813.12 Rate

Rate for providing traffic signs shall be inclusive of supply of materials, fabrication, installation and maintenance of signs. The rate for provision of barriers and delineators shall be on a rental basis per number-days. The rate for supply of flagmen shall be full wages including their reflective jackets and headgear per man-days of deployment.

814 TRAFFIC IMPACT ATTENUATORS

814.1 Scope

The work shall cover configuration, furnishing and installing traffic impact attenuation devices at hazardous locations (for example gore areas between diverging roadways) conforming to the details shown in the drawings/plans or as directed by the Engineer; so as to act as energy observers. The traffic impact attenuators or crash cushions shall be installed for speeds greater than 50 kph . They may be composed of sand barrels or of 'w'-beam fender panels supported by diaphragm with trigger mechanism.

814.2 Sand Filled Impact Attenuators

814.2.1 The system shall consist of a group or series of free standing plastic barrels configured in increasing weights from the impact point towards the object. The array shall be designed to transfer the vehicle's momentum to the increasing masses of sand in the barrels and to provide a gradual deceleration. Each barrel is to be designed with a specific weight of unbagged sand to absorb the energy of an errant vehicle. The lighter barrels shall be placed near the front of arrays to gradually slow the smaller vehicles. Heavier barrels shall be placed further back in the array to slow the larger vehicles. The standard module weights are 90 kg, 180 kg, 315 kg, 640 kg and 950 kg, as recommended by AASHTO. The axis of symmetry of the arrays should be directed along the most likely direction. Approach for an arrant vehicle for gore areas could be back towards the inter-section of the edges of pavement. Obstacles in narrow median should be shielded on both ends and the modules placed on the ends (to shield opposite direction traffic) should be placed flushed with down stream edge of the obstacle to avoid wrong way hits. The modules should be placed on a concrete or asphalt surface with maximum slope of 5 percent in any direction. Each barrel's location and weight

of sand should be carefully spray painted on the surface at the position that will be covered by the barrel to ensure that the array will be correctly reconstructed after an accident.

814.2.2 The total length and width of the array shall be designed depending upon the expected speed of approaching vehicle. The typical lay out for approach speed of 100 kph would have total length of 10 m, width of 2.5 m accommodating 14 barrels arranged in 9 rows with one barrel in first 4 rows and 2 barrels in next 5 rows. The contractor shall furnish a copy of the manufacturer's installation instructions for whatever particular brand of sand-filled impact attenuator is to be used. The sand-filled impact attenuator arrays shall be inspected to ensure that the array is set up as shown in the standard plans and filled in accordance with the manufacturer's recommendations. Sand barrels are essentially one-hit systems requiring complete replacement of impacted barrels. Their use, therefore, is suitable at sites where impact frequency is expected to be low. The arrangement shall be first designed and the layout drawing got approved by the Engineer.

814.3 Proprietary Attenuator System

The Proprietary Attenuator Systems essentially comprise a series of w- beam fender panels supported by diaphragms with a trigger mechanism at nose, which, when hit, releases a 'front assembly' to absorb the energy of impact. When impacted, the system shall telescope rearward to absorb the energy so as to bring the errant vehicle to a controlled stop. The refurbishment shall involve the replacement of damaged unit with repair done, off site. The contractor/supplier of such system shall furnish the certificate that the system to be installed has been tested in accordance with the NCHRP 350 and performs effectively at design speeds up to 100 kmph.

814.4 Measurement and Payment

The traffic impact attenuator system shall be measured and payment made for design and installation of the system as complete job at each location.

815 SEMI AUTOMATIC TOLL COLLECTION SYSTEM

815.1 Scope

The work shall cover supply and installation of Integrated Semi Automatic Toll Collection System having the following main subsystems:

i) Automatic Vehicle Counter cum Classifier (AVCC)

ii) Automatic Boom Barrier

iii) Contactless Smart Card Systems

iv) Ticket Printer

v) User Fare Display unit

vi) Close Circuit Television System (CCTV)

vii) Lane Controller

viii) Traffic Light System

ix) Intercom System

x) Over Head Lane Signs

xi) Integrated Toll Management Software

All equipment shall have built - in or external surge protection devices.

815.2 AVCC System

815.2.1 General

The AVCC system shall be able to distinguish between the categories of vehicles using the highway and as defined by the Ministry's Toll Rules. This class information shall be transmitted to the Lane Computer on completion of the post Automatic Vehicle Classification (AVC). The Lane Computer shall check that this information matches the classification entered by the toll collector. If there is a discrepancy between the two classifications, the Lane Camera shall be triggered to capture a digital image of the vehicle together with details of the class discrepancy message, transaction number with its date and time, lane number and toll collector. The digital image and discrepancy information shall be communicated to the supervisory console for further processing by the toll supervision staff. In case of network or Lane computer failure, the AVCC system shall function independently and feed data directly to the Plaza Server and the system shall be able to detect the vehicle moving in wrong direction. The system shall also assist in auditing the toll collection operation. It shall be in modular unit with capability for various modules and functions to perform independently at different levels of toll collection operation. The Central AVCC data base system shall be part of this audit function. It shall be a stand alone device with control access where the data cannot be changed or altered in any way. The reports from this system shall assist in identifying problems with operations, fraud or over/under collection of tolls. This central AVCC database System shall be able to operate independently of the Toll Lane System, even if the Toll Lane Controller is non operational. Any new technology, meeting the requirements specified in these specifications should not be excluded.

815.2.2 Technical Requirements

Each lane shall be equipped with an AVC controller (different from the lane controller)

interface to classification sensors. The classification sensors can be any or combinations of the following types:

i) Fibre-optic treadles
ii) Laser classifiers
iii) Optical height sensors
iv) Optical axle counters
v) Infrared Light curtains
vi) Magnetic Sensors
vii) Resistive Sensors

AVCC processing unit shall be a real-time processing unit, shall be the trigger source for Lane Camera system and shall have standby power supply capable of operations for a period of at least 4 hours. The AVC controller should be metallic, vandal-proof with IP 65 protection. It shall have System accuracy (calculated on a base of 10,000 vehicles):

a)	For vehicle counting	:	99% minimum
b)	For vehicle classification	:	98% minimum

815.3 Automatic Boom Barrier

815.3.1 General

The barriers are to be used to control the traffic through the lane. The operation of boom barrier shall be linked to the lane computer and shall allow the vehicle to pass through after a successful financial transaction. The system shall consist of a fixed housing and a movable arm. The boom shall be of 3000 mm length for a normal lane and more than 3500 mm for extra wide lane. The housing shall contain the motor and control units and shall be installed on the left side of the lane. The boom barrier should be electrically operated barrier gate for Toll Lane application. The barriers shall have presence detectors independent to the AVC system to prevent barrier arms coming down on vehicles while passing. This shall be in the form of infrared units, dedicated embedded loops or any other sensors. The finish of its housing may be Powder Coated Orange, RAL 2000 and that of the boom with powder Coated White RAL 9010 with reflective strips. All housing and internal parts shall have rust and corrosion free metals or alloys of high strength with suitable epoxy coating as applicable. The Housing base frame shall be of Stainless Steel so as to protect the housing from rusting from the bottom.

815.3.2 Technical Requirement

The power supply shall be through 230+/-10%V AC, 50Hz with 100 percent duty cycle. Its Logic Control shall be with Technology to ensure that opening and closing timings remain

constant under variation of wind and speed. It shall have smooth landing of boom without swaying at the end positions. The response time shall be 1.5 seconds, for boom length of upto 3000 mm and 2 sec. for boom length more than 3500 mm. The mean time before failure (MTBF) shall be 5 million cycles (1 Cycle = 1 open and close). It should be able to operate between the temperature range of -5°C to 55°C.

815.4 Lane Camera

815.4.1 General

The camera installed at convenient location shall be capable of capturing images of the following vehicles:

a) In case of class discrepancy between the class detected by the AVC and that entered by the toll collector

b) Exempt users

c) Vehicles with Smart card

d) All transaction of vehicle with special events

e) Offending vehicles

f) When the alarm footswitch is activated by the toll collector.

815.4.2 System Configuration

The camera should be installed at convenient location to capture images of the vehicles. It shall produce clear images of the front view along with the number plates of the vehicles even during night. The resolution of the images should be such that the registration number of the vehicles can be easily read. The camera should have waterproof housing with a hood to protect from direct sunlight. The protection shall be in accordance with IP65. The stand for the camera shall be made in steel tube that will not swing or twist under gutter speed of strong wind.

815.5 Smart Card System

815.5.1 Contactless Smart Card Readers/Writers

815.5.1.1 General

The Contactless Smart Card Readers/Writers are used for managing electronic Toll collection in conjunction with a compatible Contactless Smart Card. The Contactless Smart Card Readers/Writer is linked to a micro-controller or a PC which is typically the lane computer. It allows the vehicle to pass through after a successful financial transaction. Card reader/writer shall be “single-package” type, combining electronics and antenna in one package.

815.5.1.2 Installation Requirement

The Contactless Smart Card Readers/Writers shall be installed on the right side of all the lanes of the Toll Plaza. The orientation of the Contactless Smart Card Readers/Writers shall be wall mounting type, to be at a suitable height on the toll booth wall, to accommodate all types of vehicles e.g. separate readers for trucks/buses and cars/jeeps. This is to ensure that a successful 'Readers/Write' is achieved with a Contactless Smart Card. Readers/Writers'.

815.5.2 Technical Requirements

The reader shall have the ability to read the smart card from a distance, ranging from 0 cm to 10 cm with a transaction time of less than 0.5 seconds for read/write. Contactless Smart Card Readers/Writers shall be wall mounting type and all transactions shall be secured with modern and industry standard cryptographic techniques or those based on DES/3DES mechanisms to resist fraud and to deter theft or misuse. The reader/writer shall conform to ISO Standards: 14443A and shall be sealed to a NEMA 4/IP65. It should have transmit frequency of 13.56 MHz. The operating temperature of the Smart Card Readers/Writer should be -5°C to +55°C and operating humidity of up to 95 percent non-condensing.

815.5.3 Contactless Smart Cards

815.5.3.1 General

The contactless Smart Card is used for storing money value for the purpose of Toll Collection in conjunction with a compatible Contactless Smart Card readers/writers. The Contactless Smart Card allows the Readers/Writers to increment/decrement user fee from the stored money value. It allows the vehicle to pass through after a successful financial transaction. The Contactless Smart Card, the card readers/writers shall be in a single technology configuration. The smart Card shall be able to store the money value in prepaid mode.

815.5.3.2 Technical Requirements

The card shall meet the ISO 14443A standards for contactless smart cards. The memory of the smart card shall be ≥ 1KB. It shall be warranted against defects in materials and workmanship for 3 years. The Operating Temperature of the Smart Card should be -10°C to 60°C.

815.6 Close Circuit Television (CCTV) System

815.6.1 General

The System shall be provided to monitor the activities of toll collection booth operations in the toll plaza. It shall comprise Video Camera and Video Camera Housing at the toll Plaza

and 106 cm LCD Monitor and Digital Video Recorder (DVR) at the control centre. The Video Cameras shall be conveniently mounted so that full view of the Toll Plaza and the booth operations are captured.

815.6.2 Technical Requirements

The Video Camera shall be of dome type to avoid pilferage, be resistant to vandalism and be weather-proof. The mounting and equipment housing shall be able to withstand adverse weather conditions. The camera shall provide a minimum of 520 TV lines horizontal resolution. The camera shall provide a useable picture at a minimum illumination of 0.02 Lux. The weighted signal to noise (SN) ratio shall be greater than 50 dB at 1.0 V p-p, 75 ohms. The Cameras shall have MTBF (Mean time between failure) of at least 50,000 hours of operation.

815.7 Digital Video Recorder (DVR)

The Digital recorder shall be stand alone and have the facility to record images on the hard disk and also on external recording devices such as DVD, Hard Disk etc. The digital video recorder shall have enough data storage capacity to store video of 15 days from all the cameras and shall have interface to archive the data on to the DVD/Tape for back-up. The DVR shall have sufficient video signal inputs to cater for all cameras. It shall have Capability alarm/event based recording and the facility for high speed searching based on inputs such as date, time, etc. The Digital recorder shall have functionality to display multiple video images simultaneously on a single Monitor/Screen.

815.8 Lane Controller

815.8.1 General

The Lane Controller shall be provided to control and monitor all the sub systems of the toll lane. It shall consist of CPU and power supply, Data Communication ports, Digital I/O port, Circuit breakers, Terminal blocks, Relays LAN port, IP 65 enclosure with high security locking mechanism. All the peripheral devices in the lane shall be hardwired to the Lane Controller.

815.8.2 Technical Requirements

The system shall be modular with Input/Output Card having adequate channels catering to interfacing of all the peripherals devices with a provision for adding extra two devices. The system shall be housed in a metallic enclosure and installed inside the toll booth. All the peripheral devices in the lane shall be hardwired to the Lane Controller.

815.9 User's Fare Display Unit

815.9.1 General

The Fare Display Unit shall be in the form of a variable message sign, controlled automatically by the lane computer, to indicate the category of the vehicle and the amount payable by the road user. The system shall be LED based. It shall be installed outside the booth, near the payment window so that the road user will have clear view of the fare payable.

815.9.2 Technical Requirements

a)	Power Supply	:	220V/50 Hz AC
b)	Communication	:	RS232
c)	Operating Temperature	:	-10°C to + 55°C
d)	Protection	:	IP 65
e)	LED Reliability	:	100,000 hrs

815.10 Traffic Light System

815.10.1 General

LED based light signal, installed at the toll lane towards the exit side shall be connected to the lane controller. The traffic sign glowing red would indicate that the motorist has to stop and pay the user fee. After successful transactions, the traffic sign would turn green to indicate that the motorist can proceed. Traffic lights shall be installed on a pole of about 2 m above the road surface on the right side of each lane. The contractor shall decide the appropriate height taking into account other equipments to ensure clear/unobstructed visibility and control through lane controller. The system shall work in synchronization with the boom barrier and shall have in-built night dimming function.

815.10.2 Technical Requirements

a)	Size of the display	:	Approx 200 mm diametre with sun visor
b)	LED	:	Industry standard, Red and Green
c)	Housing	:	Corrosion resistant material
d)	Environmental protection	:	IP 65
e)	Intensity	:	Day light visibility > 1000 mcd for Red, >1600 mcd for Green
f)	Operating temperature	:	-10°C to + 65°C

815.11 Lane Communication System

Voice communication installed in the toll booths shall provide "hands free" two-way verbal communication between the supervision staff in the toll control room and the toll collectors. The toll collector shall be able to attract the attention of the Supervisor in the control room by pressing a single button on the intercom slave unit in the toll booth. The equipment shall also have the facility to allow the supervision staff to monitor communication in the toll booth between the toll collector and the user or between any of the tollbooths without alerting the toll collector. The voice communication system shall operate independently of the Lane Computer system. It shall also be implemented in various rooms of the plaza building and at building access points. Two-way communications shall be possible as soon as the Supervisor responds by selecting the appropriate lane button on the Master Communication unit. One-way communication shall be possible from the Control Room intercom to all lanes simultaneously (broadcast).

815.12 Overhead Lane Signs (OHLS)

815.12.1 The overhead lane signs OHLS shall be mounted on the leading edge of the canopy covering the toll lanes above the centre of the lane to indicate to the User whether the toll lane is open or closed for the processing of vehicles. A red cross signal would indicate that the lane is closed, whilst a green arrow would indicate that the lane is open to traffic.

815.12.2 Technical Requirements

The OHLS shall be made of green and red LEDs. Signs shall be sufficiently bright and directed to indicate to a motorist approaching the toll plaza, at a distance of 250 m on a bright cloud free day that lanes are available for use. The cross and allow aspects shall be larger than 300 mm. The sign shall be fitted with a sun-hood to screen the effect of the sunlight. The enclosure of the OHLS shall be constructed from a corrosion resistant material. The enclosure shall have an IP 65 rating and be ventilated to dissipate internal heat. The system shall have night dimming function.

815.13 UPS System

UPS system shall be supplied for individual lanes and plaza systems separately. Each UPS system shall be designed for 125 percent of the total connected load. The power supply to all electronic equipment (indoor and outdoor) shall be fed from UPS which shall have minimum 2 hours backup. The power budget calculation is to be submitted to the Engineer.

815.14 Violation Alarm

The siren operates in conjunction with a violation and acts as a warning device. The purpose

of the siren is to alert the plaza staff of a run-through through the lane. Visual indication is via a strobe light. It shall meet the following requirements:

i)	Technology	:	Motor driven
ii)	Audible rating	:	112 dB at 1 m
iii)	Hearing distance	:	500 m
iv)	Environmental Protection	:	IP 65

815.15 Computer Hardware

815.15.1 Plaza Server shall have following minimum Specification:

1) Intel Xeon 3.0 GHz or higher with Intel EM64T/1 MB Cache/800 MHz FSB
2) 2 GB ECC DDR2 RAM upgradeable to 12 GB
3) Dual Channel U320 SCSI Controller
4) 6x36 GB (10K rpm) HDD, Hot-pluggable, with RAID-5 Support
5) CDRW – DVD Combo Drive
6) Dual Gigabit 10/100/1000 Ethernet
8) Redundant Power Supplies, Redundant Fans
9) Anti-virus pre-loaded
10) Server Management Software – with remote management features onboard
11) 20/40 GB DAT Drive
12) Certifications: ACP V1.0 B Compliant PCI 2.2 Compliant, PXE Support, WOL support, Microsoft Windows 2000/2003, Linux, PCI-X1.0 Compliant
13) Operating Conditions: Operating Temperature Range: 0°C-50°C Relative Humidity: 20 percent - 90 percent, non-condensing
14) AC Voltage: 207V AC to 253V AC @ 47-63Hz

815.15.2 Bar Code Reader

The bar code reader shall be used to scan unique identification bar codes imprinted on media such as paper and plastic medium such as smart cards etc.The bar code reader shall be equipped with easily visible LEDs and audible beeps that indicate the scanner's operation status. The barcode reader shall have a rugged protective boot with an adjustable stand and be mounted to a countertop or be left free standing for handheld scanning. The barcode readers shall conform to IS:14700: Part 6: Sec 3; 2002. The bar code reader shall be IP 54 protected.

815.15.3 Receipt Printer

The receipt printer shall be a compact thermal printer able to print, as a minimum, toll payment receipts (text and graphics) and barcodes. The receipt printer shall use thermal fixed head technology. The print speed shall not be less than 150 mm/s for both text and graphic and at a minimum resolution of 203 dpi (8 dots/mm). It shall be able to support paper thickness of 75 - 80 GSM. The receipt printer shall support programmable English and Hindi fonts and graphics, including Barcodes of at least Code 128 format. The receipt printer shall have an automatic cutter with a self sharpening ceramic rotary knife. The receipt printer shall be robust for use in a toll booth environment where there is heavy usage and possible dust and exhaust from vehicles. The auto cutter shall have a reliability of at least 1.5 million cuts. The receipt printer head shall have a Mean Cycle between Failure (MCBF) of at least 50 million print lines. The receipt printer shall have a Mean Time between Failure (MTBF) of at least 360,000 hours. The receipt printer enclosure shall be IP54 rated.

815.15.4 Toll Management System (TMS)

The Toll Management System (TMS) shall be responsible for processing the data into information that will be used to verify toll transactions, provide toll collector control, cash-up and performance facilities, and shall include a host of management tools and reports for the effective administration of the toll operation. The TMS shall also assist in auditing the toll collection operation. It shall be a modular unit with the capability for various modules and functions to perform independently at different levels of the toll collection operation. The TMS shall have various customized reports to assist in managing the toll facility, and to provide management tools to asses toll revenues. The TMS shall have financial management and traffic analysis tools to assist the operator in planning operations. The contractor/supplier shall ensure that security updates and latest service packs, "patches" are loaded. Industry standard operating systems shall be utilized and all user licenses shall be provided. The database shall be an industry standard database and shall be supplied with all the latest service packs and patches, including user licenses.

815.15.5 Rates

The payment shall be made for design, configuration and commissioning of Semi Automatic Toll Collection System as complete job at the location indicated in the Contract, and shall be in stages specified in the Contract.

816 ADVANCED TRAFFIC MANAGEMENT SYSTEMS (ATMS)

816.1 Scope

The work shall cover design, supply, installation, commissioning and/or operation and maintenance of Advance Traffic Management Systems (which is one of the components of

Intelligent Transport Systems - ITS). The system would include out-door equipment including emergency call boxes, variable message sign systems, meteorological data system, close circuit TV camera (CCTV) system, traffic counting and classification system and transmission system. The indoor equipment would comprise a large display board, central computer (with Network Management System - NMS), CCTV monitor system, call centre system or management of emergency call boxes housed in a control centre with uninterrupted power supply. Any new technology, meeting the requirements specified in these specifications should not be excluded. The systems shall meet following objectives:

- Smooth and uninterrupted traffic flow
- Enhance road safety
- Real time information and guidance to users
- Emergency assistance round the clock
- Alerts for abnormal road and weather conditions
- Reduced journey time and inconvenience

816.2 System Requirement

ATMS shall provide the following facilities to highway users:

- make emergency calls to Control Centre in case of accidents, breakdown, fire and ambulance.
- pre-warn the highway users about unusual condition on the road.

ATMS shall provide the following information/data to traffic managers for efficient and effective handling of traffic.

- information regarding location of any incident, incoming calls, help required and messages to be passed to third parties.
- Information regarding traffic congestion, speed and weather conditions.

ATMS shall provide the following controls to traffic managers:

- change the variable message signs from the Control Centre.
- mobilize the movement of ambulances, cranes & patrolling vehicles.

ATMS shall provide online recording and reviewing of the voice & visual information for record and analysis.

816.3 System Configuration

The ATMS shall have following sub-systems:

i) Emergency Call Boxes

ii) Mobile Communication System

iii) Variable Message Signs system

iv) Meteorological Data System

v) Automatic Traffic Counter cum Classifier System

vi) Video Surveillance System

vii) Video Incident Detection System (VIDS)

816.4 Availability Requirements

The inability to perform any required function, the occurrence of unexpected action or degradation of performance below the specifications shall be considered as a failure. The Mean-time-between-failure (MTBF) shall be the average operating time accumulated by the total population of identical items between failures. The system supplier/contractor shall submit MTBF and MTTR figures. The ATMS shall have an overall system availability of better than 99 percent. The ATMS shall be considered unavailable if any of its function cannot be properly executed and when any of the following conditions persist for more than 8 hours on the entire stretch.

i) **Variable Message System Failure:** No display/Improper Display of VMS or failure of their related transmission/control system which would render the VMS inoperative

ii) **Emergency Call System Failure:** Failure of any three consecutive Call boxes or failure of their related transmission system which would render the call boxes inoperative.

iii) **ATCC Failure:** Failure of more than one ATCC or failure of their related transmission system which would render the ATCC inoperative.

iv) **Met Failure:** Failure of more than one Met or failure of their related transmission system which would render the Met inoperative.

v) **Video Surveillance System Failure:** Failure of more than two Video Cameras or failure of their related transmission/control system which would render the cameras inoperative.

vi) **Video Incident Detection System Failure:** Failure of more than one Video Cameras or failure of their related transmission/control system which would render the cameras inoperative.

vii) **Display at Control Centre:** Whenever Control Centre is unable to get display of messages initiated by the Control Centre in-charge.

In addition to the above the system shall be considered unavailable when failure of the integrated ATMS Software or its hardware persists for more than 8 hours.

816.5 Reliability Requirements

The supplier shall ensure that ATMS supplied shall comply with the following reliability requirements:

ATMS (Sub-Systems)	Mean Time Before Failure - MTBF
Outdoor Equipment	15,000 hours
Transmission System Equipment	15,000 hours
Control Centre Equipment	15,000 hours
Power Supply Equipment	15,000 hours

816.6 Maintainability Requirements

The Mean-Time-to-Repair (MTTR) of the ATMS to full normal operation following a failure shall be less than 8 hours all inclusive.

816.7 System Safety Requirements

The ATMS is classified as a safety related system and a minimum of CENELEC standards EN50128 software integrity level 2 shall apply. All equipment must comply with and be installed in accordance with IEC 65, IEC 364. All metal enclosures shall be provided with an earthing terminal and earthing of all equipment shall be carried out in accordance with overall earthing policy.

816.8 Environmental/Climatic Requirements

816.8.1 Indoor Equipment

Temperature (Operating)	:	0°C to + 50°C
Relative Humidity	:	up to 95% (non-condensing)

816.8.2 Outdoor Equipment

Temperature (Operating)	:	5°C to + 60°C
Relative Humidity	:	up to 95% (non-condensing)

The system and the equipment used as a minimum shall meet the following climatic and environmental requirements as specified in IS:9000:

Tests	Severities	
Change of Temperature (Temp cycling) as per IS:9000 (part xiv/sec1)	i) Low Temp 0°C + 3°C ii) High Temp 60°C + 2°C	
	Rate of cooling and heating 1°C/m	
	iii) Duration for each cycle	3 hours
	iv) No of Cycles, 3	
Damp heat (Cyclic) test as per IS: 9000 (part v/sec 2) variant 1	i) Upper Temp	40°C + 2°C
	ii) Lower Temp	25°C
	iii) One Cycle	12 h
	iv) Relative humidity	95 percent
	v) No. of Cycles	6
Vibration (Sinusoidal) test as per IS:9000	i) Freq. range	10 Hz – 55 Hz
	ii) Vibration Amplitude	0.35 mm
	iii) Duration of endurance for sweep	20 sweep cycles (10 Hz – 55 Hz)
	iv) No of axes	3 co-ordinate axis
	v) Duration at Resonant frequency	30 min+1 min

816.9 Emergency Call Box

816.9.1 General

The apparatus is a communication medium to be installed on the highway and to be used by the road users to make alarm call to the Control Centre in case of accidents and other emergency problems on the road or any incident. The Emergency Call Boxes shall be located in pairs on opposite sides of the highway. Main ECB unit (Master) shall be located on one side and the secondary unit (Slave) on the opposite side.

816.9.2 System Configuration

The Emergency phone shall comprise loud speaker, microphone, activation button, ringing

tone to indicate progress of call when button is pressed, confidence tone to indicate call is still connected when on hold, recorded message in case the line is busy and LED indication during conversation. These components shall be provided in FRP (Fibre Reinforcement Plastic)/stainless steel/Aluminium Alloy housing.

816.9.3 General Requirements

The ECB shall be designed for hands free operation. It shall be identified by reflective guide sign placed approx. 10 m ahead of the ECB . It shall have a provision for mounting on a concrete base with cast-in bolts, nuts and washers and the whole shall be installed so as the persons using the instrument will normally be facing the oncoming traffic. The enclosure shall be equipped with retro-reflective sticker that is clearly visible at night. The sticker shall read 'SOS' along with a telephone symbol. It shall have provision for the instructions of operation to be written clearly on the outside surface in two languages. Voice Logger Software shall be provided to handle and log all calls from the network. There shall be up to four programmable auto dial numbers associated with the push button. The ECB shall automatically dial subsequent numbers if the first number is busy or unavailable.

816.9.4 Technical Requirements

816.9.4.1 The ECBs shall work on DC supply and operate in full duplex mode. It shall be able to operate in a noise level of up to 95 db. and suitably protected against external EMI/ ESI Interference through shielding/grounding. It shall have in-built programming port/feature for addressing. The same must be capable of being addressed using Laptop or Palmtops in fields. The ECB Central software shall use this address for identification of ECB. The ECB shall use latest components and a micro controller of adequate capacity to meet the system requirements. It shall have in-built fault diagnostics features for on-site maintenance and have extant protection against lightning. It shall be powered from the communication cable/ solar panel. The solar panel and battery shall be adequately rated to support the ECB working under idle conditions and a talk time of minimum 90 minutes over 3 days in succession under worst climatic conditions. At each location one ECB shall be Master and the other Slave. The master ECB shall be equipped with fibre optic interface, solar panel, battery back-up and voice communication mechanism and shall also comply with all the requirements specified in this section for ECBs. The slave ECB shall be equipped at least with – activation button, vandal sensing mechanism, call progress indication LED, Microphone, Speakers, Handicapped operation activation – in a weather proof housing as detailed in these specifications. The system shall detect vandalism and give audio-visual alarm at the control centre. The ECB system shall have a product support guarantee of 10 years from the manufacturer. The ECB central system shall communicate with the Central Traffic Management System and all the events and alarms shall also be displayed and stored in the Central Traffic Management

server. The ECBs shall meet the specification as per the following:

i) Electromagnetic compatibility: be suitably protected against external EMI/ESI Interface through shielding/grounding.

ii) Lightning Protection: to be suitably protected.

iii) Drop and topple: BS:2011 or equivalent.

iv) Enclosure: IP 65.

The equipment shall conform to all applicable electrical standards in India.

816.10 Mobile Radio Communication System

816.10.1 General

The mobile communication system shall be provided to establish voice communication on radio between the Control Centre and the emergency mobile vehicles such as ambulances, cranes and patrolling vehicles. The system shall comprise base station unit, repeater unit, mobile radio unit and control centre equipment. Its Base Station Unit shall comprise transmitter, receiver antenna switch, radio engineering terminal, radio data terminal, radio operator terminal and power supply. Its Repeater Unit shall comprise transmitter, receiver, antenna, repeater and power supply. Its Mobile Radio Unit shall comprise transmitter, receiver, antenna, control unit and power supply. The Control Centre Equipment shall have Network Management System.

816.10.2 General Requirements

The system shall cover the entire route. The system design shall be modular in concept. The system shall be compact and rugged in design having ease of maintenance and shall work satisfactorily under adverse conditions like storm, rain and vandalism resistant. The system shall neither affect functioning of other telecom equipment installed adjacent or along it, nor get affected by the presence of other equipment/systems. The Mobile Radio shall have provision for mounting the mobile set on ambulances, cranes and patrolling vehicles. The repeater station equipment and antenna shall be installed at sub centres. Each mobile unit shall have a unique address code. The system equipment shall work on re-chargeable batteries with 24 hr back-up.

The control panel of mobile unit and base station unit shall have the following features:

i) Power ON-OFF switch

ii) Emergency calling button

iii) Adjustment of loudspeaker volume

iv) Digital display

v) Functional buttons

816.10.3 Functional Requirements

The modulation shall be either frequency or phase type (FSK) and shall operate in semi-duplex mode. The equipment shall have provision to eliminate collision of data. It shall have facility to configure the network for individual, sub-group or broadcast mode of operation for both selective calling and group calling operation. All components used in the assembly of equipment shall be of industrial grade specification. The equipment shall conform to ETS European standards and shall be suitably protected through shielding/grounding against external EMI/ESI Interference, and shall be immune to RFI, ESD and lightning.

816.10.4 Technical Requirements

The system shall have the facility to connect mobile to mobile, mobile to controller and controller to mobile. The system shall have the facilities for waiting calls, holds calls and transfer calls. The system shall have a facility such that the Control Centre can select between the call modes of individual call, group/all-call and call to mobiles listed in the queue. The system shall use primary channels for calling from mobiles to the Control Centre and vice-versa whereas the secondary channels shall be used for mobile to mobile connection. The system shall have the facility to terminate the mobile to mobile connection under the following conditions:

a) One of the two parties hangs up

b) One of the two parties receives a call from the Control Centre

c) The duration of the conversation exceeds 5 minutes limit.

In case of emergency, the system shall have the facility to receive alarm calls from mobile radio. The mobile radio shall be integrated with the Fibre Optic Communication system. The system shall use frequencies to be obtained by the contractor from WPC in the complete stretch as per scope. The system shall have the provision for communication on the PSTN Network. The system shall have suitable voting system to select the better signal at base stations as well as mobile units. The system shall have provision to handle calls from/to at least 20 mobile sets. The system shall have self-diagnostic features. The system shall be protected against any damage due to power supply fluctuations, transients and surges.

816.11 Variable Message Signs

816.11.1 Scope

The work shall cover supply and installation of Variable Message Signs (VMSs) which provide to road users the advance en-route traveller information of road conditions ahead in real time. The provisions contained in IRC:SP:85 shall be followed.

816.11.2 Fixed VMS

Fixed VMS shall be mounted on a sturdy and aesthetically pleasing gantry structure whereby the vertical clearance of at least 5.5 m is available from the road. Safety barriers shall be provided at gantry support column(s) for their protection and for safety of road users. The concrete pedestal for support column should be flushed with ground but in no case should protrude more than 1.5 m.

816.11.2.1 The minimum distance of VMS on expressways should be 1.5 km prior to decision point and that for National Highways it should be 1 km. The signs should be visible from a distance of 250 m. It should not be located on a curve and on a highway sections having grade exceeding 4 percent.

816.11.2.2 There should be clear distance between existing sign and VMS. The minimum distance between road signs and VMS should be at least 250 m on expressways and 150 m on National Highways.

816.11.3 Portable VMS

816.11.3.1 Portable signs shall be mounted at the back of a truck or similar vehicle. The portable VMS signs mounted on a truck shall be powered by solar energy or battery and show the sign of 'men at work' and/or speed limits in the construction zone. They shall be so placed that they are effective. The placement must give adequate time to the motorists to react to the message and take corrective action. On Expressways and National Highways placement of these at 2 km prior to the decision points should be done with repetition at every 500 m and 50 m prior to the point of decision. It should provide a sight distance of 200 m and should not interfere with other traffic control devices. If the portable VMS set-up and a message is not to be required for a period of next four hours or more, the sign panel should be turned away from the traffic, parallel to the road centre line. Non blank signs should be facing the drivers for an extended period.

816.11.3.2 Under no circumstances shall VMS be used for advertising of any kind. It would be in blank mode when traffic, roadway, environment or pavement conditions or public service announcements do not warrant the display of message or messages.

816.11.4 Technical Requirements

The design of the system shall be modular. The system shall use LEDs/high gain Tran reflective LCDs for outdoor full sunlight. The failure of one LED module should not affect the output of any other LED cluster. Its design shall be such that the display is legible from a distance of 300 m on Expressways and from 250 m on other highways.

The equipment will comply with the following:

i)	Overall Size Board	Length minimum 3000 mm Height minimum 1800 mm Depth 200 mm
ii)	Number of Display Lines	3
iii)	Number of Characters per line	15
iv)	Height of Characters	minimum 400 mm for English Alphabet and 380 mm for any other local script excluding vowel connotations.
v)	Language	Three languages (English, Hindi and Regional Language)
vi)	Contrast Ratio	> 30:1 perpendicular to the board face >10:1 at an angle of + 70° to perpendicular.
vii)	Memory	Capable of storing minimum 10 frames that can be triggered on receiving the tele-command.
viii)	Housing	Powder coated housing with IP55 or other equivalent international standard for protection easing against dust, sprayed water and winds.
ix)	Mounting	Pole mounted as gantry and or cantilever with vertical clearance of 5.5 m from the surface.
x)	Interface Standard	RS422 and RS485 interfaces with compatibility on Ethernet.
xi)	Special Features	Automatic diagnostic and reporting of failure/fault of arrays/rows.
xii)	Protection against EMI	Circuitry and wiring inside VMS to be protected against any kind of EMI interference
xiii)	Additional Features and humidity sensor	Incorporation of temperature sensor
xiv)	Luminous Intensity (LED)	> 3000 mcd
xv)	Life of Components of VMS	> 10 years

Elaborate Fault diagnostics shall be provided as per EN 12966 or other equivalent international standards. Each pixel shall be monitored and feed back shall be provided for the health status. Minimum of following shall be provided:

i) Power Failure at VMS

ii) Processor PCB Failure

iii) LED Cluster Failure

iv) Loss of incoming message/data not properly received.

v) Temperature monitoring.

The controller unit shall provide brightness control facility. Monitoring of ambient temperature of the housing. The controller shall be capable of automatically diagnosing and reporting component failure or any electronic fault. The controller shall be provided with a test port for local diagnostics via laptop. It shall be possible to perform fault diagnostics from the central control room via the software. The LED Clusters shall be mounted suitably for providing better viewing angle. Each display module shall have its own display interface to the Central processor. VMS shall be designed to comply with the following protocols:

NMCS2, MESSAGE CONTROL, TR2070D, NTCIP Version 2 or other equivalent international protocols.

816.11.5 Testing

The equipment shall be tested for functional requirements as below:

Messages shall be displayed using the central software and local terminal. The fault conditions shall be simulated. Messages/fault logs shall be checked for:

a) LED FAULT

b) Communication failure

c) Power failure

d) Brightness of Pixels

816.11.6 Installation Requirements

The structure on which the VMS is mounted shall be sturdy and aesthetically looking and capable of bearing wind loads up to 200 kmph. The lowest hung part of the display board shall have vertical clearance of at least 5.5 m from the road level. It shall be provided with a walkway to allow at least six persons to carry out maintenance of the VMS without obstructing the carriageway.

816.12 Transmission System

816.12.1 General

The Transmission system provides connectivity between Control Centre and outdoor equipment such as Emergency Call Boxes, Variable Message Signs, Meteorological Data System, Video Cameras, Traffic Sensors, etc. The system shall comprise Cable System, Interface System and Optical Fibre Transmission System.

816.12.2 Cable System

The system shall comprise copper cable, Backbone Optical fibre cable (for connectivity between the sub-centers and main control centre) and auxiliary fibre optic cable for connectivity of the road side equipment to the sub-centre and Coaxial cable. The cable system along with interface equipment shall work satisfactorily under adverse conditions like storm, etc. The Optical Fibre Cable system shall interconnect with the defined optical transmission sources and also if required with associated network devices for signal transmission without any impairment. A separate and independent (auxiliary) Optical Fibre Cable system shall be used for the transmission of video signals, data signals form the equipment locations to the sub-centers where copper cable has limitations for transmission of signal

All Optical Fibre Cable shall be of TEC (Govt. of India) approved design.

The Co-axial Cable System shall provide immediate interface to carry signals from CCTV/ VIDS Cameras located at strategic locations to the nearest sub centre. Optical Fibre Cable shall also be used with transmitters and receivers if the distance is large and high quality signal transmission and reception is not possible using co-axial system. The signals shall, without any impairment, be routed to the Control Centre via the sub-centers using the auxiliary Optical Fibre cable.

816.12.3 Interface System

Interface System shall comprise Sensor interface equipment, Optical fibre cable interface equipment and Control Centre interface equipment. The Interface System shall cover the Copper Cable, Co-axial Cable and Optical Fibre Cable System and transmit and process the composite signals to achieve the desired reliability/availability requirement. The Interface sub-systems shall be capable of handling the composite audio, video and data signals at various interface levels and process them. The Interface sub-systems shall be designed optimally at various levels i.e. from the individual sub-systems level to integrator through Control Centre.

816.12.4 OFC Transmission System

The system shall comprise optical line terminals, interface cards and network management. The Backbone Optical Fibre Cable System shall interconnect the sub-centre/integrators

and the Control Centre. The Optical Fibre Cable system shall interconnect with the defined optical transmission sources and also if required with associated network devices for signal transmission without any impairment. The backbone communication of Cable system shall be used only to interconnect the sub-centers to the main control centre. This cable shall be terminated only at the sub-centres and main control centre. It shall not be allowed to interface any other sub-systems in the field to this cable or any spare cores in the cable directly or through branching. A separate and independent (auxiliary) Optical Fibre Cable system shall be used for the transmission of video signals, data signals form the equipment locations to the sub-centers where copper cable has limitations for transmission of signals. This would be finalized during approval of detailed design by the successful bidder. All Optical Fibre Cable shall be of TEC (Govt. of India) approved design.

816.12.5 Power Supply System

The Power Supply System shall support the requirements of individual sub-systems. The Power Supply System proposed for individual sub-systems shall take into account the overall availability/reliability requirements. The Power Supply System design shall take into consideration local power availability, temperature and other climatic variations, and easy maintainability. A 230 V AC, 50 Hz single phase power supply shall be used. The equipment components shall have adequate surge and lightning protection.

816.13 Meteorological Data System

816.13.1 General

The Meteorological Data System shall consist of wind sensors for monitoring wind speed and direction, visibility sensors for detection of visibility changes resulting from fog or dust storm, atmospheric sensors to measure air temperature and humidity and road condition sensor to read road surface temperature. The system configuration shall therefore comprise thermocouple/dynamometer, humidity meter , anemometer and visibility meter.

816.13.2 Technical Requirements

The Meteorological Data System shall communicate the measurement to the Control Center. It shall be compact, rugged in design and having ease of maintenance and shall be capable of detecting and keeping track of the surface temperature of the Highway surface and initiate appropriate alarms at the Control Centre.

The Met. Sensor shall meet following requirements

Relative Humidity Sensor

Range	:	1100%
Minimum Accuracy	:	± 2% RH

Resolution	:	0.1%
Temperature Range	:	-5°C to +60°C
Sensor Mechanism	:	The sensor shall be adequately protected against dust/pollution and shall provide a linear output voltage for 0-100% humidity

Air Temperature Sensor

Range	:	-30°C to +70°C
Sensing Element	:	should provide a linear output for the entire range of temperature
Resolution	:	0.1% of range
Accuracy	:	±0.3% of range
Visibility Sensor		
Range	:	50 to 1500 m
Wavelength	:	880 nm
Sensor Type	:	Infrared sensor, source and detector
Accuracy	:	±15%
Wind Direction Sensor		
Threshold Speed	:	Less than 0.3 m/s
Accuracy	:	Better than ±5%
Damping ratio	:	0.7
Wind Seed Sensor		
Range	:	Up to 79 m/s
Threshold Speed	:	Less than 0.3 m/s
Accuracy	:	±2%
Output Signals	:	Average Wind/Average Gust

Road Condition Sensor

Temperature Sensor Range	:	-10°C to +60°C
Resolution	:	0.1°C
Accuracy	:	±0.2°C
Wet/Dry Sensor		
Output	:	ON/OFF

816.13.3 Data Acquisition Controller

The Data Acquisition Controller shall meet the following requirements:

i) Be suitable for all the supplied sensors,

ii) Have appropriate number and type of inputs in order to service all the sensors,

iii) Incorporate an LCD display to allow local monitoring of the data,

iv) Have a memory backup (up to 7 days) to retain data locally in case of communication failure.

816.14 Automatic Traffic Counter-cum-Classifier

816.14.1 General

This system shall be provided for identifying and recording all types of vehicles on the highway for effective monitoring and data collection at Control Centre. Besides, the system shall be capable of classifying any other vehicle category as per user needs. Vehicle classification should be user selectable based on length of vehicle and/or detuning of the loop inductivity. The system shall be robust and be capable of operating with minimum maintenance. The system shall interface with the ATMS/ATMS Software for central monitoring. The indicative classification of common vehicles in India, based on wheel base, is as given below.

	Type of Vehicle	Probable Range of Wheel Base (mm)
1)	Two Wheelers (Motorised) Scooters, Mopeds, Motor Cycle	0-1350
2)	Three Wheelers (Auto/Tempo)	1400-1800
3)	Four Wheelers Cars, jeeps, vans etc.	1801-2675
4)	Light Motor Vehicles	2690-3400
5)	Trucks/Buses	3401-5600
6)	Multi Axle Vehicles	5000-18000

Vehicle Classification should be user selectably based on length of vehicle and number of axles. The system shall have the capability of accommodating multiple installations through installation of detectors/sensors which can be left permanently in place and connected as required to the recording device when traffic counts are made at that particular location. It shall also be capable of taking inputs from portable sensors and should be modular in design. The system shall have capability of interfacing with the integrators for central monitoring. It shall have suitable interface for transmitting information from ATCC System to the Control Centre.

816.14.2 Technical Requirements

816.14.2.1 Sensors

The sensors should be a combination of piezo-electric sensors and inductive loops, enabling counting/classification of up to 4-lane traffic (expandable to atleast 6-lane traffic) with user set time periods.

816.14.2.2 Electronics

Vehicle counting/classification interval shall be programmable from one minute to 1440 minutes (24 hours) and system should accept user programmable recording intervals to count and classify during a 24 hour period. The system should be able to count and classify vehicle by each lane.

816.14.2.3 Data Collection

The system shall be capable of sending data to the ATMS/ATMS Software which shall enable the ATMS/ATMS Software to classify the vehicles, detect average speed per lane, vehicle occupancy and headway as a minimum. Data collection shall be by RS232, RS422 or RS485 interface or IP connection. The system shall be capable of recording, for later analysis, on an individual vehicle basis, time/date, speed, direction. Number of axles, axle spacing, and site identification.

816.14.2.4 Data Storage

The system should be able to record and store vehicle data for a period of at least two weeks with daily traffic voumers of up to 10,000 vehicles.

816.14.2.5 Operating Language

English

816.14.2.6 System Accuracy

The accuracy of the system in recording speeds and headways/gaps shall as per **Table 800-15**.

816.14.2.7 Data Retrieval

The system should have the capability of data retrieval, direct data transfer through a serial link to computer, Leased line/GSM/CDMA.

816.14.2.8 Software

Software and manuals to analyze the data from output of vehicle counts, classification speeds and headways shall be provided. Capability of graphic/tabular presentation of analyzed data shall also be offered.

Table 800-15 : System Accuracy Requirements

Parameter	Accuracy	Conditions
Average Speed	10 percent	There are at least 25 vehicles in the group, individual vehicle speeds are between 10 kmph and 195 kmph and the vehicles conform to normal highway driving behaviour.
Average Headway	10 percent	There are at least 25 vehicles in the group, individual vehicle speeds are between 10 kmph and 195 kmph, individual vehicle head-ways are between 1 and 10 seconds and the vehicles conform to normal highway driving behaviour.
Flows	5 percent	There are at least 100 vehicles of each category in group and vehicles conform to normal highway driving behaviour.
Occupancy	10 percent	There are at least 25 vehicles in the group, individual vehicle speeds are between 10 kmph and 195 kmph, individual vehicle headways are between 1 and 10 seconds and the vehicles conform to normal highway driving behaviour.

816.14.2.9 Mode of Operation

This will be user programmable up to at least 12 speed and 15 vehicle class bins, of vehicles operating in India (user specified). System capability in this regard may be indicated. Counter shall also bin simultaneously in speed, axle and count or any combination of the three.

816.14.2.10 Capability

The system shall have capability of recording vehicle counting and classification, speed, headway at set interval of 1-10 minutes.

816.15 Video Surveillance System

816.15.1 General

The System shall be provided to monitor the movement of vehicles on the highway. System configuration shall comprise video camera, video camera housing, pan and tilt heads, optical transmission units for video and data (if required) and mounting poles at camera locations. The Control centre configuration shall comprise monitors for individual cameras, matrix switcher, multiplexer and digital video recorder with suitable interface for the integrated highway package

and optical interface units to the backbone communication system wherever required (where the video and data cannot be transported from camera location to the Sub-centre on co-axial cable). The Video Camera location shall be easily identifiable. The Video Camera shall be of dome type to avoid pilferage, be resistant to vandalism and weather-proof. The mounting and equipment housing shall be able to withstand adverse weather conditions and the Video Camera shall be capable of working satisfactorily under worst weather conditions. The Video Camera and associated units shall be water ingress and dust proof. The Video Camera mounting shall have easy accessibility for maintenance purposes.

816.15.2 Technical Requirements

816.15.2.1 The Video Camera shall meet the following minimum technical as requirements:

a)	Image Sensor	¼" CCD with 22 x optical zoom
b)	Active Pixels	752(H)x582(V)
c)	Horizontal Resolution	Minimum 470 lines
d)	Sensitivity	0.02 lux @ 1/1.5 Second shutter speed
e)	Focus	Automatic (with manual override/preset facility)
f)	Signal to Noise	>50 dB
g)	AGC	Automatic with manual override
h)	White Balance	Automatic with manual override
i)	Auto Shutter	Yes
j)	Signal Format	NTSC/PAL

816.15.2.2 The video camera shall have angular travel as below:

Horizontal	:	360° continuous pan
Vertical Tilt	:	+2° to -92°

The Video Camera shall have speed as below:

Manual Speed

Pan	:	1/10° to 80°/second (Variable)
Tilt	:	1/10° to 40°/second (Variable)

Preset Speed

Pan	:	250°/second
Tilt	:	200°/second

816.15.2.3 The dome drive shall have 40 presets with labels and shall have an accuracy of +/-0.25° preset accuracy. It shall have built-in protection against power Line Surge and Lightning and provision for Onscreen-compass and Tilt display, integral, auto sensing multi-protocol receiver/drive and provision for Auto-flip dome rotation. There shall be programmable limit stops for Auto/random/frame scan modes. The Video Camera shall be connected to the control centre/sub-centre through co-axial cable and data cable/optical fibre cable as per the site requirement and shall have remotely selectable operating modes and shall be operated from the Control Centre. The video images from camera shall be transmitted in real time. The video image shall be made available at the control centre without any distortion or loss of information. The video camera system shall have the facility for zone blanking, auto identification of zones when the pan movement of camera is active and infra-red compatibility for night operation.

816.16 Video Incident Detection System

816.16.1 The system shall be an intelligent image detection system using CCTV cameras. The cameras shall have inbuilt intelligence to ascertain when the image has meaningfully deviated from the Standard Image originally recorded. On sensing the incident, the system shall automatically start recording the image at the control centre.

816.16.2 The Incident Detection system shall capable of the following:

a) Measurement of traffic flow speed between 0 and 150 km/hr for up to 6-lanes
b) Detection of vehicles driving in wrong direction
c) Automatic detection of 5 types of traffic flow: normal, dense, delayed, congested, and stop and go
d) Detection of stopped vehicles, within 10 secs and for up to 16 detection zones.
e) Monitor Zone occupancy of the detection area
f) Detection of deceleration
g) Detection of fog/smoke

816.16.3 Alarms for following events:

a) Queue
b) Stop
c) Inverse direction
d) Speed drop
e) Fog/smoke
f) No video signal
g) Error

816.17 Control Centre

816.17.1 General

The Control Centre shall accommodate following equipment and software:

i) Central Computer Server (with integrated ATMS/ATMS Software)

ii) Emergency call management system equipment and software

iii) CCTV Console and other Equipment

iv) Mobile radio operator and configuration equipment and software

v) Video incident detection system console and other equipment

vi) Backbone communication equipment and NMS for the same.

vii) Large Display Board

viii) Printer

ix) Uninterrupted Power Supply with supply system and back up

x) Power supply equipment.

816.17.2 Emergency Call Management

Emergency Call Management system located at the Control Centre shall carry out the following functions:

i) Attend to incoming calls from ECB's using a PC based console, and navigate the highway section under supervision using graphical representation of the network which shall be displayed on the PC monitor.

ii) Provide audible and visual alert on the screen for any incoming calls from the Emergency call boxes. Colour of the icon representing the Call boxes on the graphical map shall change indicating the states of call box (phone) healthy, call box (phone) faulty, incoming call, conversation in progress and call on hold.

iii) Provide for call waiting signal to the ECB and put the call on queue in case of several calls at the same time.

iv) Create log and record all conversations from and to the Control Centre from the ECBs.

v) Further the system shall automatically check periodically (the interval of which shall be operator selectable) the health of phones and generate an audio visual alarm in case of faults.

vi) The system shall generate a unique call number for each and every call and allow the operator to provide annotation.

vii) There shall be one Emergency Call Manager's terminal easily expandable to more operator stations by connecting more operator terminals.

viii) Holding of any call by the operator.

ix) Terminating any call by the operator.

x) Seamless configuration on addition/deletion of ECBs on the network.

xi) Database generation, display on the monitor and logging of all parameters of call progress.

xii) Recording of communication between the operator and road users.

xiii) Audio visual alarm in case of vandalism.

xiv) Audio visual alert in case of operation by handicapped.

816.17.3 Integrated ATMS Software

The ATMS software shall manage the following on a single server platform:

a) Emergency Communication System

b) Variable Message Signs System

c) Meteorological Data System

d) Automatic Traffic Counter cum Classifier System

e) Video incident Detection System

f) CCTV Surveillance System.

816.17.4 System Architecture

816.17.4.1 Hardware for Central Server

The system shall run on a powerful dual-processor server with RAID facilities to provide continuity of hard disk storage. Storage capacity should be large ;and comfortably sufficient to cater for the demands of a modern traffic management system. The system shall have client-server architecture so that multiple users may access the system simultaneously.

Minimum hardware specification shall be as follows:

a) Server from reputed company

b) Dual Core 2.2 GHz Processor or Higher

c) Hard Disc: 5* 146 (RAID 5 Support)

d) 4Gb RAM or higher

e) Operating system: Industry standard

f) The database: Industry standard

g) Tape drive for backup/archive

h) Facility for remote diagnosis and support.

816.17.4.2 Hardware for Work Stations/Operator Console

The workstations shall have the following specifications:

a) Pentium IV 2.0 GHz

b) 512 Mb RAM

c) 80GB ; Hard Drive

d) 19" TFT monitor

816.17.5 System Software

The System software shall run on industry standard Server platform incorporating either MS Windows or Linux operating system in a client server mode. All the above subsystems shall be displayed and managed by the Supervisor which will show the status of all the above subsystems simultaneously as graphic symbols/icons. The graphic operator interface shall be menu driven for ease of operation. The operator shall be able to configure, set values, commands, perform database operations, reports, archive using these menus. The Integrated ATMS software shall monitor and record online all data from ATCC, Met Sensors, VMS, Traffic control system, CCTV, VIDS and ECBs. It shall be possible to configure the sub-systems as well as add/delete components of the system such as ECB, VMS, MET sensor, ATCC, VIDS, and CCTV in the ATMS software online seamlessly.

The Integrated ATMS Software shall also have following features:

i) The system server shall be configured so as to minimize the risk of data loss in the event of system failure of power loss. It shall support client terminals operating on a LAN, WAN or remote connection. Access to the database and client terminals shall be username and password controlled. Access level shall be determined by the system supervisor and shall range from "read only" to full edit/supervisor rights. The system shall not bypass/violate access rights setup on slave systems. It shall not be possible to send shut down or "Kill" commands form the database management system.

ii) For system monitoring it shall be possible to configure a view only user with access to the map and embedded/linked data only. Such

a terminal could be used by police, highway engineers, emergency services, etc. It shall be possible to relay urgent faults/incidents/System alarms (supervisor configurable) to remote operators/staff via an SMS message for any requirements in future.

iii) The system shall have proven and modular Web interfaces. It should be possible to integrate the same if required in future for providing highway information such as CCTV images, traffic flow, journey time, etc., to the general public via internet web pages.

iv) The system shall have proven and modular interfaces to automatic license plate recognition system. It shall be possible to integrate the same in future if required.

816.17.6 System Functions

816.17.6.1 Sub-system Monitoring and Control

The System software shall monitor and control ATMS sub-systems as below:

i) It shall monitor and record online all data from Meteorological Data System installed on the highway. The data shall be updated every five minutes.

ii) It shall monitor and record online all data from the ATCC. The system shall provide the user with the information/display of traffic flow conditions on the MAP. The data shall be updated every one minute.

iii) It shall monitor health of the Emergency telephones on a continuous basis.

iv) It shall monitor and control the variable message signs. The operator shall be able to generate new messages for signs. The system shall react intelligently and automatically to the highway conditions and set up suitable messages on the VMS. It shall also be possible to schedule the pre-defined messages to be displayed on the VMS. The display period shall be operator selectable. The priorities of the messages shall also be operator selectable.

v) The System software shall provide information regarding incidents (VIDS) and store/archive them for future use.

vi) The system shall interface with intelligent traffic control systems for traffic control and monitoring specially at interchanges and access points.

vii) The system shall interface to CCTV system to select cameras for display and control of images.

viii) The system shall process above referred data acquired through above system for decision taking, display information on respective VDU monitors and central Large Display Board.

ix) Provide continuously clear and comprehensive displays and print log of events.

x) Access to historical data files of ATMS.

xi) Execution of operator commands with access code security.

xii) Generation of reports at specified times (operator selectable)

xiii) System timekeeping.

xiv) Connectivity and data transfer to other control centers if required.

816.17.6.2 Graphic User Interface (GUI)

The GUI for the system shall be map based and menu driven. The changes commands/ menu shall be simple to be executed by the operator. There shall be a screen depicting the map of the highway along with other equipment installed on the route. The highway map shall be capable of displaying an overview level showing the whole area covered by the system. It shall then be possible with no loss of definition, to zoom to a detailed map. It shall be possible to display both static and dynamic data on the Map. Two level of mapping shall be supported as a minimum:

1) Highway Overview.

2) Highway section wise detailed view.

Icons shall be placed on the map to identify different equipment types. Both shall be automatically tagged with grid reference data to allow them to appear in the correct relative positions at both levels of map. Positioning the mouse pointer over an icon or poly-line shall display the corresponding equipment status information.

For poly-lines representing route data, the user shall be able to configure a number of thresholds for the different data types available. An example would be congestion for links where up to X% percentage thresholds can be defined. Each threshold shall be represented by a distinct colour or changed shapes. The map shall use this scheme to display the poly-lines based on comparisons with the current real-time data.

The user shall have the ability to configure the map view to display the data layers of choice, for example to show Met Sensor only or ATCC together with current incidents.

It shall be possible for the operator to place icons or "active" symbols on the map to represent

a) Access control/ramp metering system

b) Traffic control system

c) Variable Message signs

d) CCTV cameras

e) Incidents such as Accident, Roadworks, Event, Diversion, Breakdown and Road closure

f) Strategy

g) Weather station data

h) Flow, speed classification information

i) User defined fields

Icons will be either active or non-active. Active icons will link to the associated system and show their current status change of state (colour or flash) and by displaying detailed information triggered user action.

816.17.7 Datebase Management

The database used by the ATMS software shall be an industry standard database like ORACLE, SQL, dbase etc. The system shall have facility to perform certain selected database operations only by authorized users.

816.17.7.1 Data Presentation and Storage

The presentation of data shall reflect the use of the system as a real time tool for the operator to monitor and control the highway. It shall be possible to present current data (day) in comparison with profile data or date comparison (same day last year). It shall be possible to create predictive traffic data and trends. The data shall be stored in the system in a format to present weekly and monthly average for congestion and summary flow for weeks and months. The system shall store at least 12 months of data. Older data may be archived. However, the system shall provide tools for the retrieval, manipulation and presentation of data. Data store shall be clearly marked with an indicator to show day or period type e.g. normal, holiday, weekly off; by reference to the system calendar. It shall be possible to export data to an external system for further analysis. Transfer shall be available in .xls, csv or any standard formats. It shall be possible to display data or combinations of data in graphical manner and to print graphs, e.g., Graphs of current, profile, historic, and combinations for

a) Flow

b) Occupancy

c) Congestion

816.17.7.2 Archive and Restore

This facility shall allow the archiving of the database to a tape/External HD/DVD . The data archived shall then be deleted from the database. Data may only be archived when it is more

than two years old. Only one archive request may be outstanding at a time. Once archived, part or all of the data may be restored by copying from the tape back onto the system, where it remains for 30 days. Only one restore request may be outstanding at a time.

It shall be possible to define a series of notification levels which will raise an alarm when the disk space reaches a specified limit. This is used to alert an operator to the need to archive data.

816.17.7.3 Database Back-up

The system management procedures for producing daily and weekly back-ups shall not need any operator intervention.

816.17.7.4 Reports

The system shall have detailed reports for:

a) Status reports for the sub-systems (alarms, faults etc.)

b) Detailed traffic reports-speed, count, occupancy etc.

c) Detailed weather report for all variables from weather sensor

d) Detailed report of emergency call.

816.17.7.5 Timetable and Calendar

The system shall have a time Table facility. The timetable shall allow commands by day of the week, time of day, day type. The system calendar shall allow days to be marked as normal, holiday, weekly off, etc.

816.17.7.6 System Log

The system shall retain a log of all events, alarms, timetable actions, and operator actions(together with operator username). In addition to system generated events the operators shall have facilities to enter events or incidents into the log. It shall be possible to search the log by time/date, event type, operator user name, strategy, location.

The log facility shall provide the means to:

a) Record all important events that occur in the operation of the integrated highway management system, both manual and automatic View and manage the status of alarm events,

b) Collect and collate incident information from both manual and automatic sources,

c) Allow the user to record routine operational messages,

d) View all changes and actions taken on the ATMS,

e) Record and view useful contact names and other details.

816.17.7.7 Asset Management

a) The system shall incorporate a facility to store records of assets for ATMS.

b) The asset register shall store data relating to location, type, and number of equipments as well as electricity ratings.

816.17.7.8 User Management

This facility shall provide the means to make user access to ATMS secure. Only the system administrator(s) shall have access to this facility and will set up details for other users. Each user shall have a username that needs to be configured so that it matches a PC log-in. Hence logging on to the PC will automatically mean that access to ATMS is available for the chosen users. Each user can also be configured to have access to none, some or all of the ATMS facilities.

816.17.8 Operator Interface and Control

816.17.8.1 Fault and Alarm Management

Fault and Alarm Monitoring (FAM) for ATMS shall have following features:

a) The FAM system shall be provided with the capabilities to monitor system alarm status on a real-time basis.

b) The FAM system shall have the ability to store alarms in the database for future enquiries, and to access the fault alarm history database for retrieval of alarm data in the alarm history memory.

c) All ATMS controlled equipment as well as VMS display boards shall be provided with fault monitoring and reporting to the FAM system.

816.17.8.2 Alarm Handling

a) The following alarm conditions shall be provided to the FAM system as a minimum:

i) Loss of communication link

ii) Loss of the entire ATMS facilities at a location

iii) Loss of interface link with the ECB

iv) Alarm from MET Sensor-Air Temperature, Visibility, Humidity, Road Surface temperature, Road Surface wet/dry, Wind Speed, wind direction etc.

v) VMS Faults e.g Communication Fault, LED Fault, Data parity fault, Power supply fault, Protocol polling fault to I/O Device, etc.

vi) ATCC faults e.g. Sensor fault, communication link failure etc.

vii) CCTV faults

viii) Traffic control system faults-Lamp LED Fault, Sensor fault, communication link failure, etc.

ix) Power supply unit failure

x) Automatic Message priority conflict.

b) All failure alarms shall be stamped with time and date.

c) All failure alarms shall remain on the active alarm display list until they have been acknowledged by the operator on the FAM system via the management workstation.

d) All alarms removed from the active alarm display list shall automatically be inserted into the alarm history database when they occur.

e) The alarm history database shall be provided with sufficient storage capacity to store the anticipated alarms for a period of at least four weeks without carrying out any housekeeping function.

816.17.8.3 Alarm Displays

a) Alarms shall be displayed on the workstation via a detailed full screen alarm browser application.

b) The alarm Display shall provide as a minimum the following general capabilities and characteristics for the ABA for alarm display list and alarm history:

i) A colour coding scheme indicating the alarm severity according to the alarm classifications.

ii) The display of the alarms with their associated time stamps.

iii) Scrolling capabilities to enable the operator to view more alarms that can be displayed on one single screen.

iv) The facilities to acknowledge alarms.

v) The facilities to clear alarms from the display.

816.17.8.4 Fault Diagnostics

The fault diagnostics system shall perform the following diagnostics features as a minimum.

i) detect the alarm conditions as listed in Clause 815.17.7.2.

ii) All fault status information and associated equipment test results shall be presented to the workstation immediately after the alarms are triggered.

816.17.8.5 Failure Modes

When power is restored following a power failure to the system, the system shall perform all necessary self-testing processes and then resume functioning fully in the same configuration as before the shutdown. This shall be completed automatically within 5 minutes of power restoration.

816.17.9 Back Bone Communication System

The backbone communication system shall connect the sub-centers with the Control Centre. The auxiliary Optical Fibre communication system shall provide connectivity for peripheral systems like ATCC, CCTV, mobile radio, emergency call management system, VIDS, Traffic Control System, Mobile Radio and LAN interface for Tolling Systems to the Control Centre. There shall be a node for the backbone communication system at every sub-centre and the Control Centre. The network management system (NMS) shall be located at main control centre. It shall however be possible to connect the NMS at any sub-center location which houses a communication node. The NMS shall be installed on a PC.

816.17.10 Large Display Board

816.17.10.1 Functions

a) The device shall be used for monitoring the traffic through CCTV/ VIDS to display the ATMS Graphical User Interface (GUI). The large display board shall be displayed on the wall of the Control Centre. The Application software shall consist of a built-in module for display board.

b) It shall be possible to create customized data acquisition screen and drag icons by simple click of the mouse.

c) It shall be possible to create backgrounds using scanned photographs, maps, one-line diagrams, engineering drawings, etc., using popular graphic or engineering applications.

d) It shall be possible to create new process diagrams that represent various sections of the highway at different levels of levels of details using the package.

816.17.10.2 Equipment

The Large Display Board shall be highly reliable for installation and round the clock operation in the Control Centre. The Display Board shall be driven by the Central Computer using the main console. The design of the Display Board system shall be modular and expandable. The Display Board shall use high gain trans-reflective LCDs for ambient indoors. The Board shall meet the following specifications:

i)	Overall board size	:	Length minimum 3000 mm Height minimum 1200 mm
ii)	Display	:	Graphic
iii)	Contrast Ratio	:	minimum 1000:1
iv)	Housing	:	Structure coated housing with IP54 Protection casing against dust, sprayed water
vii)	Interface Standard	:	RS 422, RS 485 (Ethernet compatible)
viii)	Special Features	:	Automatic diagnostics and failure reporting

816.17.11 Uninterrupted Power Supply

816.17.11.1 Functions

The uninterrupted power supply shall be installed at the Control Centre for providing clean uninterrupted power supply to all the operational Equipment at the centre. The uninterrupted power supply shall be capable of providing full load for the operational equipment for a minimum period of 60 minutes. The Control Centre shall be powered from 230V AC from the State Electricity Board (SEB) supply. Any loss of AC power to the Control Centre from the SEB shall not cause loss of any data on the computers or any resetting of system parameters. The following requirements will be met:

Features

Rating	:	To meet the load requirement
Input Voltage	:	230 V AC (+10% to -15%)
Input Frequency	:	50 HZ ± 10%
Inverter Type	:	High frequency switching sinusoidal multiple Pulse

Output Voltage	:	230 V
Output Frequency	:	Free running 50 Hz ± 0.1% Tracking bypass ± 2%
Output Voltage Waveform	:	Sinusoidal
Output Voltage Regulation	:	Better than ± 1% for simultaneous variation of no. to full load and input Voltage to any extremes. ±
Total harmonic distortion	:	<5%
Inverter efficiency	:	>87%
Transmit Response	:	for 100% step load Dip-Typical 5% max. <8% Peak-Typical 5% max. <8% Recovery to normal up to 60 msec. i.e. 3 cycles.
Overload capacity	:	125% for 10 msec. 800% on static bypass for 10 msec.
Audible indication	:	<55 dBA at 1 meter distance for
	i)	Mains OK
	ii)	Inverter OK
	iii)	Overload
	iv)	On battery
	v)	Low battery
	vi)	Inverter trip

Four extra LED indications shall be available with automatic bi-directional static swith for

i) By pass OK

ii) Load on inverter

iii) Load on By Pass

iv) By Pass frequency out of range

v) Metering for voltage, frequency and current

vi) Battery capacity required for minimum 1-hour back up at full load.

816.18 Warranty

The Contractor/Supplier of the Advanced Traffic Management Systems (ATMS) shall furnish the Warranty/Guarantee for successful commissioning and operation of ATMS for a minimum

period of 5 years. He shall also furnish the certificate that there is no proprietary item and that the Systems shall be interoperable. All components and equipments shall be tested for commissioning. The documents with regard to design, technical details, installation details, testing and commissioning, details of fault diagnostics, operation and maintenance manuals and reports shall be submitted to the Engineer by the Contractor/Supplier.

816.19 Payment

The payment shall be made for design, configuration, installation and commissioning the ATMS, as complete job on the identified stretch of highway, as specified in the Contract or as per directions of the Engineer.

900

QUALITY CONTROL FOR ROAD WORKS

901 GENERAL

901.1 All materials to be used, all methods to be adopted and all works to be performed shall be strictly in accordance with the requirements of these Specifications. The Contractor shall set up a field laboratory at locations approved by the Engineer and equip the same with adequate equipment and personnel in order to carry out Quality Control for works and all the required tests as per Specifications and/or as directed by the Engineer. The provision and maintenance of the laboratory shall be as per Clause 120 and/or as directed by the Engineer. The list of equipment and the facilities to be provided shall be got approved from the Engineer in advance.

901.2 The Contractor's laboratory shall be manned by a qualified Materials Engineer/Civil Engineer assisted by experienced technicians, and the set-up should be got approved by the Engineer.

901.3 The Contractor shall carry out quality control tests on the materials and work to the frequency stipulated in subsequent paragraphs. In the absence of clear indications about method and or frequency of tests for any item, the instructions of the Engineer shall be followed.

901.4 For satisfying himself about the quality of the materials and work, quality control tests will also be conducted by the Engineer (by himself, by his Quality Control Units or by any other agencies deemed fit by him), generally to the frequency set forth hereunder. Additional tests may also be conducted where, in the opinion of the Engineer, need for such tests exists.

901.5 The Contractor shall provide necessary co-operation and assistance in obtaining the samples for tests and carrying out the field tests as required by the Engineer from time to time. This shall include provision of laboratory equipment, transport, consumables, personnel including labour attendants, assistants in packing and dispatching and any other assistance considered necessary in connection with the tests.

901.6 For the work of embankment, subgrade and pavement, construction of subsequent layer of same or other material over the finished layer shall be done after obtaining permission from the Engineer. Similar permission from the Engineer shall be obtained in respect of all other items of works prior to proceeding with the next stage of construction.

901.7 The Contractor shall carry out modifications in the procedure of work, if found necessary, as directed by the Engineer. Works falling short of quality shall be rectified/ redone by the Contractor at his own cost, and defective work shall also be removed from the site of works by the Contractor at his own cost.

901.8 The cost of laboratory building including essential supplies like water, electricity, sanitary services and their maintenance and cost of all equipment, tools, materials,

labour and incidentals to perform tests and other operations of quality control according to the Specification requirements shall be deemed to be incidental to the work and no payment shall be made for the same. If, however, there is a separate item in the Bill of Quantities for setting up of a laboratory and installing testing equipment, such work shall be paid for separately.

901.9 For testing of soils/soil mixes, granular materials and mixes, bituminous materials and mixes, cement concrete materials and mixes, aggregates, cores etc., samples in the required quantity and form shall be supplied by the Contractor at his own cost.

901.10 For cement, bitumen, steel, emulsion, road marking paint, sign boards, geo-synthetics and similar other materials where essential tests are to be carried out in the presence of Engineer at the manufacturer's plants or at laboratories other than the site laboratory, the cost of samples, sampling, testing and furnishing of test certificates shall be borne by the Contractor.

Manufacturer's test certificate together with invoice or delivery challan shall be furnished for every lot of supply apart from tests to be conducted at site laboratory for prime properties of the material like cement, bitumen, etc. Where facilities for testing of materials are not available at site laboratory the same shall be tested at an outside laboratory in the presence of the Engineer. For specialized items such as sign boards, road marking paint, etc. the Engineer may order for third party test from an approved laboratory.

901.11 The method of sampling and testing of materials shall be in accordance with the requirements of the relevant Indian Standards and these Specifications. Where they are contradicting, the provisions in these Specifications shall be followed. Where they are silent, sound engineering practices shall be adopted. The sampling and testing procedure to be used shall be as approved by the Engineer and his decision shall be final and binding on the Contractor. The cost of all tests shall be borne by the Contractor.

901.12 The materials for embankment construction shall be got approved from the Engineer. The responsibility for arranging and obtaining the land for borrowing or exploitation in any other way shall rest with the Contractor who shall ensure smooth and uninterrupted supply of materials in the required quantity during the construction period.

Similarly, the supply of aggregates and other materials for construction shall be from sources approved by the Engineer. Responsibility for arranging uninterrupted supply of materials from the source shall be that of the Contractor.

901.13 Defective Materials

All materials which the Engineer has determined as not conforming to the requirements of the Contract shall be rejected whether in place or not; they shall be removed immediately

from the site as directed. Materials, which have been subsequently corrected, shall not be used in the work unless approval is accorded in writing by the Engineer. Upon failure of the Contractor to comply with any instruction of the Engineer, the Engineer shall have authority to cause the removal of rejected material and to deduct the removal cost thereof from any payments due to the Contractor.

901.14 Imported Materials

The Contractor shall furnish a list of materials/finished products manufactured, produced or fabricated outside India which he proposes to use in the work. The Contractor shall not be entitled to extension of time for acts or events occurring outside India and it shall be the Contractor's responsibility to make timely delivery to the job site of all such materials obtained from outside India.

The materials imported from outside India shall conform to the relevant Specifications of the Contract. In case where materials/finished products are not covered by the Specifications in the Contract, the details of laboratories/establishments where tests are to be carried out shall be specifically brought out and agreed to in the Contract.

The Contractor shall furnish to the Engineer a certificate of compliance of the tests carried out. In addition, certified mill test reports clearly identified in the lot of materials shall be furnished at the Contractor's cost.

902 CONTROL OF ALIGNMENT, LEVEL AND SURFACE REGULARITY

902.1 General

All works performed shall conform to the lines, grades, cross sections and dimensions shown on the drawings or as directed by the Engineer, subject to the permitted tolerances described herein-after.

902.2 Horizontal Alignment

Horizontal alignment shall be reckoned with respect to the centre line of the carriageway as shown on the drawings. The edges of the carriageway as constructed shall be correct within a tolerance of ± 10 mm therefrom. The corresponding tolerance for edges of the roadway and lower layers of pavement shall be ± 25 mm.

902.3 Surface Levels

The levels of the subgrade and different pavement courses as constructed, shall not vary from those calculated with reference to the longitudinal and cross-profile of the road

shown on the drawings or as directed by the Engineer beyond the tolerances mentioned in Table 900-1.

Table 900-1 : Tolerances in Surface Levels

1)	Subgrade	±20 mm
2)	Sub-base	
	a) Flexible pavement	±10 mm
	b) Concrete pavement	±6 mm
3)	Base-course for flexible pavement	
	a) Bituminous Base/Binder course	±6 mm
	b) Granular	
	i) Machine laid	±10 mm
	ii) Manually laid	±15 mm
4)	Wearing course for flexible pavement	
	a) Machine laid	±6 mm
	b) Manually laid	±10 mm
5)	Cement concrete pavement	±5 mm

Provided, however, that the negative tolerance for wearing course shall not be permitted in conjunction with the positive tolerance for base course, if the thickness of the former is thereby reduced by more than the following limits:

- 4 mm for bituminous wearing course of thickness 40 mm or more
- 3 mm for bituminous wearing course of thickness less than 40 mm
- 5 mm for concrete pavement slab

For checking compliance with the above requirement for subgrade, sub-base and base course, measurements of the surface levels shall be taken on a grid of points placed at 6.25 m longitudinally and 3.5 m transversely. For any 10 consecutive measurements taken longitudinally or transversely, not more than one measurement shall be permitted to exceed the tolerance as above, this one measurement being not in excess of 5 mm above the permitted tolerance.

For checking the compliance with the above requirement for bituminous wearing courses and concrete pavements, measurements of the surface levels shall be taken on a grid of points spaced at 6.25 m along the length and at 0.5 m from the edges and at the centre of the pavement. In any length of pavement, compliance shall be deemed to be met for the final road surface, only if the tolerance given above is satisfied for any point on the surface.

902.4 Surface Regularity of Pavement Courses

The longitudinal profile shall be checked with a 3 metre long straight edge/moving straight-edge as directed by the Engineer at the middle of each traffic lane along a line parallel to the centre line of the road.

The maximum permitted number of surface irregularities shall be as per Table 900-2.

Table 900-2 : Maximum Permitted Number of Surface Irregularities

	Surfaces of Carriageways and Paved Shoulders				Surfaces of Laybys, Service Areas and all Bituminous Base Courses			
Irregularity	4 mm		7 mm		4 mm		7 mm	
Length (m)	300	75	300	75	300	75	300	75
Number of Surface Irregularities on National Highways/ Expressways*	15	9	2	1	40	18	4	2
Number of Surface Irregularities on Roads of lower Category*	40	18	4	2	60	27	6	3

* Category of each section of road as described in the Contract.

The maximum allowable difference between the road surface and underside of a 3 m straight-edge when placed parallel with, or at right angles to the centre line of the road at points decided by the Engineer shall be:

for pavement surface (bituminous and cement concrete)	3 mm
for bituminous base courses	6 mm
for granular sub-base/base courses	8 mm
for sub-bases under concrete pavements	10 mm
for subgrade	15 mm

902.5 Rectification

Where the surface regularity of subgrade and the various pavement courses fall outside the specified tolerances in Clause 902.4, the Contractor shall be liable to rectify these in the manner described below and to the satisfaction of the Engineer.

i) **Subgrade:** Where the surface is high, it shall be trimmed and suitably compacted. Where the same is low, the deficiency shall be corrected by scarifying the lower layer and adding fresh material and recompacting to the required density. The degree of compaction and the type of material to be used shall conform to the requirements of Clause 305.

ii) **Granular Sub-base:** Same as at (i) above, except that the degree of compaction and the type of material to be used shall conform to the requirements of Clause 401.

iii) **Lime/Cement Stabilized Soil Sub-base:** For lime/cement treated materials where the surface is high, the same shall be suitably trimmed while taking care that the material below is not disturbed due to this operation. However, where the surface is low, the same shall be corrected as described herein below.

For cement treated material, when the time elapsed between detection of irregularity and the time of mixing of the material is less than 2 hours, the surface shall be scarified to a depth of 50 mm, supplemented with freshly mixed materials as necessary and recompacted as per the relevant specification. When this time is more than 2 hours, the full depth of the layer shall be removed from the pavement and replaced with fresh material to Specification. This shall also apply to lime treated material except that the time criterion shall be 3 hours instead of 2 hours.

iv) **Water Bound Macadam/Wet Mix Macadam Sub-base/Base:** Where the surface is high or low, the top 75 mm shall be scarified, reshaped with added material as necessary and recompacted as per Clause 404 in the case of Water Bound Macadam and to Clause 406 in the case of Wet Mix Macadam.

v) **Bituminous Constructions:** For bituminous construction other than wearing course, where the surface is low, the deficiency shall be corrected by adding fresh material over a suitable tack coat, if needed, and recompacting as per specifications. Where the surface is high, the extra thickness in the affected layer shall be removed and replaced with fresh material and compacted to Specifications.

For wearing course, where the surface is high or low, the full depth of the layer shall be removed and replaced with fresh material and compacted to specifications. In all cases where the removal and replacement of a bituminous layer is involved, the area treated shall not be less than 5 m in length and not less than 3.5 m in width.

vi) **Dry Lean Concrete Sub-Base:** The defective length of the course shall be removed to full depth and replaced with material conforming to **Clause 601**. The area treated shall be at least 3 m long, not less than 1 lane width and extend to the full depth. Before relaying the course, the disturbed subgrade or layer below shall be corrected by levelling, watering and compacting.

vii) **Cement Concrete Pavement:** The defective areas having irregularity exceeding 3 mm but not greater than 6 mm when tested with a 3 metre long straight edge may be rectified by scrabbling or grinding using approved equipment. When required by the Engineer, areas which have been reduced in level by the above operation(s) shall be retextured in an approved manner either by cutting grooves (5 mm deep) or roughening the surface by hacking the surface. If high areas in excess 6 mm or low areas in excess of 3 mm occur, exceeding the permitted numbers and if the Contractor cannot rectify, the slab shall be demolished and reconstructed at the Contractor's expense and in no case the area removed shall be less than the full width of the lane in which the irregularity occurs and full length of the slab.

If deemed necessary by the Engineer, any section of the slab which deviates from the specified levels and tolerances shall be demolished and reconstructed at the Contractor's cost.

902.6 Riding Quality

The riding quality of bituminous concrete wearing surface, as measured by a standard towed fifth wheel bump integrator, shall not be more than 2000 mm per Km.

903 QUALITY CONTROL TESTS DURING CONSTRUCTION

903.1 General

The materials supplied and the works carried out by the Contractor shall conform to the specifications prescribed in the Clauses for the relevant items of work.

For ensuring the requisite quality of construction, the materials and works shall be subjected to quality control tests, as described hereinafter. The testing frequencies set forth are the desirable minimum and the Engineer shall have the full authority to carry out additional tests as frequently as he may deem necessary, to satisfy himself that the materials and works comply with the appropriate specifications. However, the number of tests recommended in Tables 900-3 and 900-4 may be reduced at the discretion of the Engineer if it is felt that consistency in the quality of materials can still be maintained with the reduced number of tests.

Test procedures for the various quality control tests are indicated in the respective Sections of these Specifications or for certain tests within this Section. Where no specific testing procedure is mentioned, the tests shall be carried out as per the prevalent accepted engineering practice to the directions of the Engineer.

Table 900-3 : Control Tests and their Minimum Frequency for Sub-Bases and Bases (Excluding Bitumen Bound Bases)

S. No.	Type of Construction	Test		Frequency (min.)
1)	Granular	i)	Gradation	One test per 400 cu.m
		ii)	Atterberg limits	One test per 400 cu.m
		iii)	Moisture content prior to compaction	One test per 400 cu.m
		iv)	Density of compacted layer	One test per 1000 sq.m
		v)	Deleterious constituents	As required
		vi)	CBR	As required
2)	Lime/Cement Stabilised Soil Sub-base	i)	Quality of lime/ cement	One test for each consignment subject to a minimum of one test per 5 tonnes
		ii)	Lime/Cement content	Regularly, through procedural checks
		iii)	Degree of pulverization	Periodically as considered necessary
		iv)	CBR or Unconfined Compressive Strength test on a set of 3 specimens	As required
		v)	Moisture content prior to compaction	One set of two tests per 500 sq.m
		vi)	Density of compacted layer	One set of two tests per 500 sq.m
		vii)	Deleterious constituents	As required
3)	Water Bound Macadam	i)	Aggregate Impact Value	One test per 1000 cu.m of aggregate
		ii)	Grading of aggregate	One test per 250 cu.m
		iii)	Combined Flakiness and Elongation Indices	One test per 500 cu.m of aggregate
		iv)	Atterberg limits of binding material	One test per 50 cu.m of binding material
		v)	Atterberg limits of screenings	One test per 100 cu.m of aggregate
4)	Wet Mix Macadam	i)	Aggregate Impact Value	One test per 1000 cu.m of aggregate
		ii)	Grading of aggregate	One test per 200 cu.m of aggregate
		iii)	Combined Flakiness and Elongation Indices	One test per 500 cu.m of aggregate
		iv)	Atterberg limits of portion of aggregate passing 425 micron sieve	One test per 200 cu.m of aggregate
		v)	Density of compacted layer	One set of three tests per 1000 sq.m

Table 900-4 : Control Tests for Bituminous Works and their Minimum Frequency

S. No.	Type of Construction	Test		Frequency (min.)
1)	Prime Coat/Tack Coat/Fog Spray	i)	Quality of binder	Number of samples per lot and tests as per IS:73, IS:217 and IS:8887 as applicable
		ii)	Binder temperature for application	At regular close intervals
		iii)	Rate of spread of Binder	Three tests per day
2)	Seal Coat/Surface Dressing	i)	Quality of Binder	Same as mentioned under Serial No. 1
		ii)	Aggregate Impact Value or Los Angeles Abrasion Value	One test per 200 cu.m of each source and whenever there is change in the quality of aggregate
		iii)	Combined Flakiness and Elongation Indices	One test per 100 cu.m of aggregate for each source and whenever there is change in the quality of aggregate
		iv)	Stripping value of aggregates (Immersion Tray Test)	One test of each source and whenever there is change in the quality of aggregate
		v)	Water absorption of aggregate	-do-
		vi)	Water sensitivity of mix	-do-
		vii)	Grading of aggregate	Two tests per day
		viii)	Soundness (Magnesium Sulphate/ Sodium Sulphate)	One test for each source and whenever there is change in the quality of aggregate
		ix)	Polished stone value (not applicable for SAM/SAMI)	-do-
		x)	Temperature of binder in boiler, aggregate in dryer and mix at the time of laying and compaction	At regular intervals
		xi)	Rate of spread of materials	Same as mentioned under Serial No. 1
		(xii)	Percentage of fractured faces (When gravel is used)	One test per 100 cu.m of aggregate
3)	Open-graded Premix Surfacing/Close-graded Premix Surfacing	i)	Quality of binder	Same as mentioned under Serial No. 1
		ii)	Aggregate Impact Value or Los Angeles Abrasion Value	Same as mentioned under Serial No. 2
		iii)	Combined Flakiness and Elongation Indices	Same as mentioned under Serial No. 2
		iv)	Stripping value	Same as mentioned under Serial No. 2
		v)	Water absorption of aggregates	Same as mentioned under Serial No. 2
		vi)	Water Sensitivity of mix	Same as mentioned under Serial No. 2
		vii)	Grading of aggregates	Same as mentioned under Serial No. 2

S. No.	Type of Construction	Test		Frequency (min.)
		viii)	Soundness(Magnesium Sulphate and Sodium Sulphate)	Same as mentioned under Serial No. 2
		ix)	Polished stone value	Same as mentioned under Serial No. 2
		x)	Temperature of binder at application	At regular interval
		xi)	Binder content	Two tests per day per plant
		xii)	Percentage of fractured faces	Same as mentioned under Serial No. 2
4)	Bituminous Macadam	i)	Quality of binder	Same as mentioned under Serial No. 1
		ii)	Aggregate Impact Value or Los Angeles Abrasion Value	Same as mentioned under Serial No. 2
		iii)	Combined Flakiness and Elongation Indices	One test per 350 cu.m for each source
		iv)	Stripping value	Same as mentioned under Serial No. 2
		v)	Water absorption of aggregates	Same as mentioned under Serial No. 2
		vi)	Water Sensitivity of mix	Same as mentioned under Serial No. 2
		vii)	Grading of aggregates	Same as mentioned under Serial No. 2
		viii)	Soundness (Magnesium Sulphate/ Sodium Sulphate)	Same as mentioned under Serial No. 2
		ix)	Percentage of fractured faces	Same as mentioned under Serial No. 2
		x)	Binder content	Same as mentioned under Serial No. 3
		xi)	Control of temperature of binder and aggregate for mix and of the mix at the time of laying and rolling	Same as mentioned under Serial No. 2
		xii)	Density of Comp layer	One test per 700 sq.m area
		xiii)	Rate of spread of Mixed Material	At regular intervals
5)	Dense Bituminous Macadam/Bituminous Concrete	i)	Quality of binder	Number of samples per lot and tests as per IS:73 or IRC:SP:53, IS:15462
		ii)	Aggregate Impact Value/ Los Angeles Abrasion Value	One test per 350 cu.m of aggregate for each source and whenever there is change in the quality of aggregate
		iii)	Flakiness and Elongation Indices	One test per 350 cu.m of aggregate for each source and whenever there is change in the quality of aggregate
		iv)	Soundness test (Sodium or Magnesium Sulphate test)	One test for each source and whenever there is change in the quality of aggregate
		v)	Water absorption of aggregates	One test for each source and whenever there is change in the quality of aggregate

S. No.	Type of Construction	Test		Frequency (min.)
		vi)	Sand equivalent test	One test for each source and whenever there is change in the quality of aggregate
		vii)	Plasticity Index	One test for each source and whenever there is change in the quality of aggregate
		viii)	Polished stone value	One test for each source and whenever there is change in the quality of aggregate
		ix)	Percentage of fractured face	One test per 350 cu.m of aggregate when crushed gravel is used
		x)	Mix grading	One set for individual constituent and mixed aggregate from dryer for each 400 tonnes of mix subject to minimum of two tests per day per plant
		xi)	Stability and voids analysis of mix including theoretical maximum specific of loose mix	Three tests for stability, flow value, density and void contents for each 400 tonnes of mix subject to minimum of two tests per day per plant
		xii)	Moisture Susceptibility of mix (AASHTO T283)	One test for each mix type whenever there is change in the quality or source of coarse or fine aggregate
		xiii)	Temperature of binder in boiler, aggregate in dryer and mix at the time of laying and compaction	At regular intervals
		xiv)	Binder content	One set for each 400 tonnes of mix subject to minimum of two tests per day per plant
		xv)	Rate of spread of mix material	After every 5th truck load
		xvi)	Density of Compacted layer	One test per 700 sq.m area
6)	Sand Asphalt Base course	i)	Quality of binder	Same as mentioned under Serial No. 2
		ii)	Aggregate Impact Value or Los Angeles Abrasion Value	Same as mentioned under Serial No. 2
		iii)	Sand equivalent test	Same as mentioned under Serial No. 2
		iv)	Plasticity Index	Same as mentioned under Serial No. 5
		v)	Mix grading & binder content	Same as mentioned under Serial Nos. 2 and 3
		vi)	Stability of Mix	Same as mentioned under Serial No. 5
		vii)	Control of temperature of binder in boiler, aggregate in the dryer and mix at the time of laying and rolling	Same as mentioned under Serial No. 2
		viii)	Thickness of layer	Same as mentioned under Serial No. 5
		ix)	Density of Compacted layer	Same as mentioned under Serial No. 5

S. No.	Type of Construction	Test		Frequency (min.)
7)	Slury seal and Micro surfacing	i)	Quality of Aggregate Sand Equivalent Value Water Absorption Soundness Test (Sodium/ Magnesium Sulphate Test)	One per source/ site
		ii)	Quality of Emulsion	One per lot of 20 t as per IS:8887
		iii)	Aggregate Moisture	Two per day
		iv)	Aggregate Gradation	Two per day at site
		v)	Binder Content	Two per lane per Km
		vi)	Calibration of Machine	Once per Project
		vii)	Quantity of Slurry (By weight of aggregate)	Daily (Travel time of Machine)
8)	Stone Matrix Asphalt	i)	Quality of binder	Number of samples per lot and tests as per IS:73 or IRC:SP:53, IS:15462
		ii)	Aggregate Impact Value/ Los Angeles Abrasion Value	One test per 100 cu.m of aggregate
		iii)	Flakiness and Elongation Indices	One test per 100 cu.m of aggregate
		iv)	Soundness Test (Sodium and Magnesium Sulphate Test)	One test for each method for each source and whenever there is change in the quality of aggregate
		v)	Water absorption of aggregate	One test for each source and whenever there is change in the quality of aggregate
		vi)	Sand equivalent test	One test for each source
		vii)	Plasticity Index	One test for each source
		viii)	Polished stone value	One test for each source
		ix)	Percent of fractured faces	One test per 50 cu.m of aggregate when crushed gravel is used
		x)	Mix grading	One set for individual constituent and mixed aggregate from dryer for each 400 tonnes of mix subject to minimum of two tests per day per plant
		xi)	Air voids and VMA analysis of mix including theoretical maximum specific gravity of loose mix	Three tests per day
		xii)	Moisture Susceptibility of mix (AASHTO T 283)	One test for each mix type whenever there is change in the quality or source of coarse or fine aggregate
		xiii)	Temperature of binder in boiler, aggregate in dryer and mix at the time of laying and compaction	At regular intervals

S. No.	Type of Construction	Test	Frequency (min.)
		(xiv) Binder content	One set for each 400 tonnes of mix subject to minimum of two tests per day per plant
		(xv) Rate of spread of mix material	After every 5th truck load
		(xvi) Density of compacted layer	One test per 250 sq.m area
9)	Mastic asphalt	i) Quality of binder	Same as mentioned under Serial No. 5
		ii) Aggregate Impact Value and Los Angeles Abrasion Value	Same as mentioned under Serial No. 5
		iii) Combined Flakiness and Elongation Indices	Same as mentioned under Serial No. 5
		iv) Stripping value	Same as mentioned under Serial No. 2
		v) Water Sensitivity of mix	Same as mentioned under Serial No. 5
		vi) Grading of aggregates	Two tests per day per plant on the individual constituent and mixed aggregates from the dryer
		vii) Water absorption of aggregates	Same as mentioned under Serial No. 5
		viii) Soundness (Magnesium Sulphate/ Sodium Sulphate)	Same as mentioned under Serial No. 5
		ix) Percentage of fractured faces	Same as mentioned under Serial No. 5
		x) Binder content and aggregate grading	Same as mentioned under Serial No. 3
		xi) Control of temperature of binder and aggregate for mixing and of the mix at the time of laying and rolling	At regular close intervals
		xii) Rate of Spread of Mixed Material	Regular control through check of layer thickness
		xiii) Hardness number	Minimum two tests per day
10)	Recycled Material Grading of aggregate		Two tests per day
11)	Cold Mixes		All tests as per S. No.5
12)	Quality of Modified Binder		Number of samples per lot and tests as per IS:15462.
13)	Geotextiles		The requirements of Section 700 shall apply

Note : Daily, weekly, monthly reports on test results shall be prepared indicating the location of sampling and testing, deviation from the specified values for materials and works and remedial action taken in respect of removal of defective work shall certified be prepared by the Contractor. The test record shall be certified by the Engineer that these tests were done in his presence and testing carried as per prescribed methodology.

903.2 Tests on Earthwork for Embankment, Subgrade Construction and Cut Formation

903.2.1 Borrow Material

Grid the borrow area at 25 m c/c (or closer, if the variability is high) to full depth of proposed working. These pits should be logged and plotted for proper identification of suitable sources of material. The following tests on representative samples shall be carried out for every 3000 cum for each source:

a) Sand Content [IS:2720 (Part-4)]: 2 tests per 3000 cu.m of soil.

b) Plasticity Test [IS:2720 (Part-5)]: Each type to be tested, 2 tests.

c) Density Test [IS:2720 (Part-8)]: Each soil type to be tested, 2 tests.

d) Deleterious Content Test [IS:2720 (Part-27)]: As and when required by the Engineer.

e) Moisture Content Test [IS:2720 (Part-2)]: Two tests.

f) CBR Test on materials to be incorporated in the subgrade on soaked/ unsoaked samples [IS:2720 (Part-16)] : One CBR test (average of three specimens) or closer as and when required by the Engineer.

903.2.2 Compaction Control

Control shall be exercised on each layer by taking at least one set of ten measurements of density for each 3000 sq.m of compacted area, or closer as required to yield the minimum number tests results for evaluating a day's work on statistical basis. The determination of density shall be in accordance with IS: 2720 (Part-28). Test locations shall be chosen only through random sampling techniques. If non-destructive tests are carried out, the number of tests shall be doubled. If considerable variations are observed between individual density results, the minimum number of tests in one set of measurement shall be increased. The acceptance criteria shall be subject to the condition that the mean density is not less than the specified density plus:

$$\left[1.65 - \frac{1.65}{(No.\ of\ samples)^{0.5}}\right] \text{ times the standard deviation}$$

However, for earthwork in shoulders (earthen) and in the subgrade, at least one set of ten density measurements shall be taken for every 2000 sq.m for the compacted area In other respects, the control shall be similar to that described earlier.

903.2.3 Cut Formation

Tests for the density requirements of cut formation shall be carried out in accordance with Clause 903.2.2.

903.3 Tests on Sub-bases and Bases (Excluding Bitumen Bound Bases)

The tests and their frequencies for the different types of bases and sub-bases shall be given in Table 900-3. The evaluation of density results and acceptance criteria for compaction control shall be on lines similar to those set out in Clause 903.2.2.

903.3.1 Acceptance Criteria

the acceptance criteria for tests on the strength of cement/lime stabilized soil and distribution of stabilizer content shall be subject to the condition that the mean value is not less than the specified value plus:

$$\left[1.65 - \frac{1.65}{(No.\ of\ samples)^{0.5}}\right] \text{ times the standard deviation}$$

903.4 Tests on Bituminous Construction

903.4.1 Tests and Frequency

The tests and their minimum frequencies for the different types of bituminous works shall be as given in Table 900-4. The Engineer may direct additional testing as required.

903.4.2 Acceptance Criteria

The acceptance criteria for tests on density shall be subject to the condition that the mean value is not less than the specified value plus:

$$\left[1.65 - \frac{1.65}{(No.\ of\ samples)^{0.5}}\right] \text{ times the standard deviation}$$

903.4.3 Where the Contract specifies the surface roughness requirements, in terms of Bump Integrator value, the surface roughness shall be measured by a calibrated Bump Integrator as per the procedure described in IRC:SP:16. The measurements shall be taken at centre line of each lane for a minimum completed length of one Km.

903.5 Quality Control Tests for Concrete Road Construction

903.5.1 Dry Lean Concrete Sub-base

903.5.1.1 Sampling and Testing of Cubes

Samples of dry lean concrete for making cubes shall be taken from the uncompacted material from different locations immediately before compaction at the rate of 3 samples for each 1000 sq.m or part thereof laid each day. The sampling of mix shall be done from the paving site.

Test cubes of 150 mm size shall be made immediately from each mix sarnple.

Cubes shall be made in accordance with the methods described in IS:516 except that the cubes shall be compacted by means of a vibratory hammer with the moulds placed on a level and rigid base. The vibrating hammer shall be electric or pneumatic type fitted with a square or rectangular foot having an area of between 7500 to 14000 sq.mm. The compaction shall be uniformly applied for 60± 5 seconds with a downward force of between 300 N and 400 N on to each of the three layers of the lean concrete material placed into the mould. The surface of each compacted layer shall be scarified before the next layer is added to give key for the next layer. The final layer shall be finished flush with the top of the cube mould.

The dry lean concrete shall be cured in accordance with IS:516.

903.5.1.2 In-situ Density

The dry density of the laid material shall be determined from three density holes at locations equally spaced along a diagonal that bisects each 2000 sq.m or part thereof laid each day and shall comply with the requirements as per Clause 601.6.5.1. This rate of testing may be increased at the discretion of the Engineer in case of doubt or to determine the extent of defective area in the event of non-compliance. Density holes at random may be made to check the density at edges.

903.5.1.3 Thickness

The average thickness of the subbase layer as computed by the level data of sub-base and subgrade or lower sub-base shall be as per the thickness specified in the contract drawings. The thickness at any single location shall not be 8 mm less than the specified thickness. Such areas shall be corrected as stated in Clause 601.6.5.5. Areas which cannot be repaired should be replaced over full width. The extent of deficient area should be decided based on cores.

903.5.1.4 Frequency of Quality Control Tests

The frequency of quality control tests for levels, alignment and materials shall be as given in Table 900-6.

903.5.2 Pavement Concrete

903.5.2.1 Sampling and Testing of Beam and Cube Specimens

At least three beams and three cube specimens, one set of three each for 7 day and 28 day strength tests shall be cast for every 150 cu.m (or part thereof) of concrete placed during construction. On each day's work, not less than three pairs of beams and cubes

shall be made for each type of mix from the concrete delivered to the paving plant. Each pair shall be from a different delivery of concrete and tested at a place to be designated by the Engineer in accordance with the testing procedure as outlined in Clause 602.3.3. Groups of four consecutive results from single specimens tested at 28 days shall be used for assessing the strength for compliance with the strength requirements. The specimens shall be transported in an approved manner to prevent sudden impact causing fractures or damage to the specimen. The flexural strength test results shall prevail over compressive strength tests for compliance.

903.5.2.2 A quality control chart indicating the strength values of individual specimens shall be maintained for continuous quality assurance. Where the requirements are not met with, or where the quality of the concrete or its compaction is suspect, the actual strength of the concrete in the slab shall be ascertained by carrying out tests on cores cut at the rate of 2 cores for every 150 cu.m of concrete. The average of the results of crushing strength tests on these cores shall not be less than 0.8 x 0.85 times the corresponding characteristic compressive strength of cubes, where the height to diameter ratio of the cores is two. Where height to diameter ratio is not two, necessary corrections shall be made in calculating the crushing strength of cubes in the following manner.

The crushing strengths of cylinders with height to diameter ratios between 1 and 2 may be corrected to correspond to a standard cylinder of height to diameter ratio of 2 by multiplying with the correction factor obtained from the following equation:

$$f = 0.11\ n + 0.78$$

where f = correction factor and

n = height to diameter ratio

The corrected test results shall be analysed for conformity with the specification requirements for cube samples. Where the core tests are satisfactory, they shall have precedence for assessing concrete quality over the results of moulded specimens. The diameter of cores shall not be less than 150 mm.

If, however, the tests on cores also confirm that the concrete is not satisfying the strength requirements, then the concrete corresponding to the area from which the cores were cut should be replaced, i.e., at least over an area extending between two transverse joints where the defects could be isolated or over larger area, if necessary, as assessed by additional cores and their test results. The equivalent flexural strength at 28 days shall be estimated in accordance with Clause 602.3.3.2.

In order to ensure that the specified minimum strength at 28 days is attained in 1 in 20 of all test beams, the mix shall be proportioned to give an average strength at 28 days exceeding the specified strength by 1.65 times the standard deviation calculated first from the flexural strengths of test beams made from the trial mix and subsequently from the accumulating result of flexural strengths of job control test beams.

The standard deviation shall be re-calculated from the test results obtained after any change in the source or quality of materials and the mix shall be adjusted as necessary to comply with the requirements.

An individual 28 day test strength below the specified strength shall not be evidence for condemnation of the concrete concerned if the average 28 day strength of this beam plus the preceding 5 and succeeding 4 beams exceeds the specified strength by 1.65 times the standard deviation and provided that there is no other evidence that the concrete mix concerned is substandard.

Beams shall be made each day in pairs at intervals, each pair being from a different batch of concrete. At the start of the work, and until such time as the Engineer may order a reduction in the number of beams required, at least six pairs of beams and cubes shall be made each day, one of each pair for testing at 28 days for determination of minimum permissible flexural strength and the other for testing at an early age for the Engineer to assess the quality of the mix. When the first thirty number of 28-day results are available, and for so long as the Engineer is satisfied with the quality of the mix, he may reduce the number of beams and cubes required.

During the course of construction, when the source of any material is to be changed, or if there is any variation in the quality of the materials furnished, additional tests and necessary adjustments in the mix shall be made as required to obtain the specified strength.

The flexural strengths obtained on beams tested before 28 days shall be used in conjunction with a correlation between them and the 28 day flexural strengths to detect any deterioration in the quality of the concrete being produced. Any such deterioration shall be remedied without awaiting the 28 day strengths but the earlier strengths shall not constitute sole evidence of non-compliance of the concrete from which they were taken.

Concrete shall be deemed not to comply with the Specification when more than one test beam in a batch has a 28 day strength less than the specified strength and the average 28 day flexural strength of the batch of beams is less than the specified strength plus 1.65 times the standard deviation of the batch.

Should the concrete fail to comply with the Specification for strength as described above, the Contractor may, all at his own expense, elect to cut cores from the suspect concrete as the Engineer shall direct. From the relation between cube strength and flexural strength, the core strength shall be converted to flexural strength.

The equivalent flexural strength at 28 days shall be the estimated in-situ strength multiplied by 100 and divided by the age-strength relation obtained from Table 900-5.

Any concrete that fails to meet the strength specification shall be removed and replaced at Contractor's expense.

Table 900-5 : Age-Strength Relation of Concrete (Related to 100 percent at 28 Days)

Days	0	2	4	6	8
0	–	41.0	60.0	71.0	77.5
10	81.5	85.0	87.5	90.0	92.0
20	94.0	96.0	97.5	98.5	100.0
30	101.0	102.0	103.5	104.5	105.5
40	106.5	107.0	108.0	109.5	110.0
50	110.5	111.0	112.0	112.5	113.0
60	114.0	114.5	115.0	115.5	116.0
70	116.5	117.0	117.5	118.0	118.5
80	119.0	119.5	119.5	120.0	120.5
90	121.0	121.5	122.0	122.0	122.5
100	123.5	123.5	123.5	124.0	124.5
110	125.0	125.0	125.5	125.5	126.0
120	126.0	126.0	127.0	127.0	127.5
130	127.5	128.0	128.5	128.5	129.0
140	129.0	129.5	129.5	130.0	130.0
150	130.5	130.5	131.0	131.0	131.5
160	131.5	131.5	132.0	132.0	132.5
170	132.5	132.5	133.0	133.0	133.5
180	133.5	134.0	134.0	134.5	134.5
190	135.0	135.0	135.0	135.5	135.5
200	135.5	135.5	136.0	136.0	136.5
210	136.5	136.5	137.0	137.0	137.0
220	137.0	137.5	137.5	137.5	138.0
230	138.0	138.5	138.5	138.5	138.5
240	139.0	139.0	139.0	139.5	139.5
250	139.5	140.0	140.0	140.0	140.0
260	140.5	140.5	140.5	140.5	141.0
270	141.0	141.0	141.5	141.5	141.5
280	142.0	142.0	142.0	142.0	142.0
290	142.5	142.5	142.5	142.5	142.5
300	143.0	143.0	143.0	143.0	143.5

Days	0	2	4	6	8
310	143.5	143.5	144.0	144.0	144.0
320	144.0	144.5	144.5	144.5	144.5
330	144.5	145.0	145.0	145.0	145.0
340	145.0	145.5	145.5	145.5	145.5
350	146.0	146.0	146.0	146.0	146.0
360	146.0	146.0	146.5	146.5	146.5

903.5.2.3 In-situ Density

The density of the compacted concrete shall be such that the total air voids are not more than 3 percent. The air voids shall be derived from the difference between the theoretical maximum dry density of the concrete calculated from the specific gravity of the constituents of the concrete mix and the average value of three direct density measurements made on cores at least 150 mm diameter. Three cores shall be taken from trial lengths and in first two km length of the pavement, while the slab is being constructed during normal working. The proportions of the mix and the vibratory effort imparted i.e. the frequency and magnitude of vibration shall be adjusted to achieve the maximum density.

All cores taken for density measurement in the trial section shall also be checked for thickness. The same cores shall be made use of for determining in-situ strength. In case of doubt, additional cores may be ordered by the Engineer and taken at locations decided by him to check the density of concrete slab or the position of dowel/tie bars without any compensation being paid for the same.

In calculation of the density, allowance shall be made for any steel in cores.

Cores removed from the main carriageway shall be reinstated with compacted concrete with mix proportions of 1 part of Portland cement : 2 parts of fine aggregate:2 parts of 10 mm nominal size single sized coarse aggregate by weight. Before filling the fine mix, the sides shall be hacked and cleaned with water. Thereafter cement-sand slurry shall be applied to the sides just prior to filling the concrete mix.

903.5.2.4 Thickness

Thickness shall be controlled by taking levels as indicated in Clause 902.3. Thickness of the slab at any point checked as mentioned above shall be within a tolerance of -5 mm to + 10 mm of the specified thickness as per Drawing. Thickness deficiency more than 5 mm may be accepted and paid for at a reduced rate given in Clause 602.16.3. In no case, however, thickness deficiency shall be more than 10 mm.

903.5.2.5 Summary of Control Tests

Table 900-6 gives a summary of frequency of testing of pavement concrete.

Table 900-6 : Frequency of Quality Control Tests for Pavement Concrete

1)	Levels, alignment and texture			
	i)	Level tolerance		Clause 902.3
	ii)	Width of pavement and position of paving edges		Clause 902.2
	iii)	Pavement thickness		Clause 902.3 and 903.5.2.4
	iv)	Alignment of joints, widths, depth of dowel grooves		To be checked @ one joint per 400 m length or a day's work
	v)	Surface regularity both transversely and longitudinally		Once a day or one day's work without disturbing the curing
	vi)	Alignment of dowel bars and their accuracy/tie bars		To be checked in trial length as per Clause 602.6.5.2 and once on every 2 km.
	vii)	Texture depth		Clause 602.12
2)	Quality of materials and concrete shall be as under :			
	1) Cement Physical and chemical Tests		IS:269 IS:455 IS:1489 IS:8112 IS:12269	Once for each source of supply and occasionally when called for in case of long/ improper storage. Besides, the Contractor also will submit daily test data on cement released by the manufacturer
	2) Coarse and Fine Aggregates	i) Gradation	IS:2386	One test for every day's work of each fraction of coarse aggregate and fine aggregate, initially; (may be relaxed later at the discretion of the Engineer)
		ii) Deleterious constituents	IS:2386 (Pt. 2)	-do-
		iii) Water absorption	IS:2386 (Pt. 3)	Regularly as required subject to a minimum of one test a day for coarse aggregate and two tests a day for fine aggregate. This data shall be used for correcting the water demand of the mix on a daily basis.
	3) Coarse Aggregate	i) Los Angeles Abrasion value or Aggregate Impact test	IS:2386 (Pt. 4)	Once for each source of supply and subsequently on monthly basis.
		ii) Soundness	IS:2386 (Pt. 5)	Before approving the aggregates and every month subsequently.
		iii) Alkali aggregate reactivity	IS:2386 (Pt. 7) IS:456	-do-

	4) Water	Chemical Tests	IS:2386	Once for approval of source of supply, subsequently only in case of doubt.
	5) Concrete	i) Strength of concrete	IS:516	2 cubes and 2 beams per 150 cu.m or part thereof (one for 7 day and other for 28 day strength) or minimum 6 cubes and 6 beams per day's work whichever is more.
		ii) Core strength on hardened concrete	IS:516	As per the requirement of the Engineer, only in case of doubt.
		iii) Workability of fresh concrete-Slump Test	IS:1199	One test per each dumper load at both Batching plant site and paving site initially when work starts. Subsequently sampling may be done from alternate dumper.
		iv) Thickness determination		From the level data of concrete pavement surface and sub-base at grid points of 5/6.25 m x 3.5 m
		v) Thickness measurement for trial length		3 cores per trial length
		vi) Verification of level of string line in the case of slip form paving and steel forms in the case of fixed form paving		String line or steel forms shall be checked for level at an interval of 5.0 m or 6.25 m. The level tolerance allowed shall be ± 2 mm. These shall be got approved 1-2 hours before the commencement of the concreting activity.

1000

MATERIALS FOR STRUCTURES

1001 GENERAL

Materials to be used in the work shall conform to the specifications mentioned on the drawings, the requirements laid down in this section and specifications for relevant items of work.

If any material, not covered in these Specifications, is required to be used in the work, it shall conform to relevant Indian Standards, if there are any, or to the requirements specified by the Engineer.

1002 SOURCES OF MATERIALS

The Contractor shall identify the sources of materials like coarse aggregate and fine aggregate and notify the Engineer regarding the proposed sources prior to delivery.

Samples of materials from the source shall be tested in the presence of Engineer for conformity to specifications. It shall also be ensured that the variation in test results of different samples, is within acceptable limits.

For manufactured items like cement, steel reinforcement and pre-stressing strands, the contractor shall intimate the Engineer the details of the source, testing facilities available with the manufacturer and arrangements for transport and storage of material at site. If directed by the Engineer, the contractor shall furnish samples and test results of recently received material. The Engineer, at his discretion, in case of doubt, may require the contractor to test the materials in an independent laboratory approved by the Engineer and furnish test certificates. The cost of these tests shall be borne by the contractor. The sampling and testing procedures shall be as laid down in the relevant Indian Standards and where they are not available, the same shall be carried out as per the directions of the Engineer. Only materials from sources approved by the Engineer shall be brought to the site. If the material from the approved source proves unacceptable at any time, the contractor shall identify new sources of acceptable materials conforming to specifications.

If any proprietary items are proposed to be used in the works, they shall be governed by the provisions of Clause 115.4 of these Specifications.

1003 BRICKS

Burnt clay bricks shall conform to the requirements of IS:1077, except that the minimum compressive strength when tested flat, shall not be less than 8.4 MPa for individual bricks and mean strength not less than 10.5 MPa for a group of 5 specimens. They shall be free from cracks and flaws and nodules of free lime. The brick shall have smooth rectangular faces with sharp corners and emit a clear ringing sound when struck. The size may be according to local practice with a tolerance of ± 5 percent.

1004 STONES AND BLOCKS

1004.1 Stones

Stones shall be of the type specified. They shall be hard, sound, free from cracks, decay and weathering and shall be freshly quarried from an approved quarry. Stones with round surface shall not be used.

The stones, when immersed in water for 24 hours, shall not absorb water of more than 5 percent of their dry weight when tested in accordance with IS:1124.

The length of stone shall not exceed three times its height and the width on the base shall not be greater than three-fourth of the thickness of the wall nor less than 150 mm.

1004.2 Blocks

Solid concrete blocks made of cement and suitable aggregates shall conform to relevant provisions of IS:2185 Part 1 in respect of dimension, mix, manufacturing, curing, drying and physical requirements. The minimum compressive strength of solid concrete blocks when tested as per IS:2185 Part 1 shall not be less than 10.5 MPa. Hollow light weight concrete blocks shall not be used in works.

The thickness of concrete block shall not be less than 200 mm and the width shall not be less than 200 mm. The density of concrete block shall not be less than 2.2 ton/cu.m.

1005 CAST IRON

Cast iron shall conform to IS:210. The grade number of the material shall not be less than 14.

1006 CEMENT

Cement to be used shall be any of the following types with the prior approval of the Engineer.

a) Ordinary Portland cement, 33 Grade, conforming to IS:269.

b) Ordinary Portland cement, 43 Grade, conforming to IS:8112.

c) Ordinary Portland cement, 53 Grade, conforming to IS:12269.

d) Sulphate resisting Portland cement, conforming to IS:12330.

e) Portland Pozzolana cement (fly ash based) conforming to IS:1489 (Part 1)

f) Portland slag cement conforming to IS:455

g) Rapid Hardening Portland cement, conforming to IS:8041.

h) Low heat Portland cement conforming to IS:12600

Cement of 33 grade conforming to IS:269 shall be used only after ensuring that the minimum required design strength can be achieved without exceeding the maximum permissible cement content of 450 Kg/cum of concrete (excluding any mineral admixture).

Cements of 43 and 53 grades conforming to IS:8112 and IS:12269 respectively may be used provided the minimum cement content mentioned elsewhere from durability considerations, is not reduced.

Sulphate resisting cement conforming to IS:12330 shall be used when sodium sulphate and magnesium sulphate are present in large enough concentration to be aggressive to concrete. The recommended threshold values as per IS:456 are: sulphate concentration in excess of 0.2 percent in surrounding soil or 300 ppm (0.03 percent) in ground water. Cement conforming to IS:12330 shall be carefully selected from strength considerations to ensure that the minimum required design strength can be achieved without exceeding the maximum permissible cement content of 450 kg/cum (excluding any mineral admixture).

Alternatively, Portland slag cement conforming to IS:455 with slag content more than 50 percent can be used instead of sulphate resisting cement when the sulphate content in the surrounding soil is less than 1 percent or the sulphate content in the ground water is less than 2500 ppm.

Cement conforming to IS:8041 shall be used only for precast concrete products after specific approval of the Engineer.

Total chloride content shall be 0.1 percent by mass of cement for the cement to be used in structures other than prestressed concrete structures and 0.05% by mass of cement in prestressed concrete structures. Also, total sulphur content calculated as sulphuric anhydride (SO_3) shall in no case exceed 3.5 percent.

Where chloride is encountered along with sulphates in soil or ground water, ordinary Portland cement with C_3A content from 5 to 8 percent shall be preferably used in concrete, instead of sulphate resisting cement.

Manufacturer's test certificate shall be submitted to the Engineer by the contractor for every consignment of cement. The certificate shall cover all the tests for chemical requirements, physical requirements and chloride content as per relevant codes as applicable.

Independent tests of samples drawn from the consignment, shall be carried out at the site laboratory or in an independent laboratory approved by the Engineer, immediately after

delivery. The following properties shall be tested:

i) Compressive strength.

ii) Setting time.

The cost of the tests shall be borne by the Contractor.

Cement in bags in local storage for more than 3 months after completion of tests, may be re-tested for compressive strength and setting times (initial and final) before use and may be rejected if it fails to conform to any of the requirements.

Lot size for independent testing of cement at site shall be the quantity received at site on any day, subject to a maximum of 500 tonnes.

1007 COARSE AGGREGATES

For plain and reinforced cement concrete (PCC and RCC) or prestressed concrete (PSC) works, coarse aggregates shall consist of clean, hard, strong, dense, non-porous and durable pieces of crushed stone, crushed gravel, natural gravel or a suitable combination thereof or other approved inert material. They shall not contain pieces of disintegrated stones, soft, flaky, elongated particles, salt, alkali, vegetable matter or other deleterious materials in such quantities as to reduce the strength and durability of the concrete, or to attack the steel reinforcement. Coarse aggregates having positive alkali-silica reaction shall not be used. All coarse aggregates shall conform to IS: 383 and tests for conformity shall be carried out as per IS:2386, Parts I to VIII.

The contractor shall submit for the approval of the Engineer, the entire information indicated in Appendix A of IS:383.

Maximum nominal size of coarse aggregate for various structural components in PCC, RCC or PSC, shall conform to Section 1700 of these Specifications.

The maximum value for flakiness index for coarse aggregate shall not exceed 35 percent. The coarse aggregate shall satisfy the requirements of grading as given in Table 1000-1:

Table 1000-1 : Grading Requirements of Coarse Aggregate

IS Sieve Size	Percentage Passing for Graded Aggregate of Nominal Size		
	40 mm	20 mm	12.5 mm
63 mm	—	—	—
40 mm	95 – 100	100	—
20 mm	30 – 70	95 – 100	100
12.5 mm	—	—	90 – 100
10 mm	10 – 35	25 – 55	40 – 85
4.75 mm	0 – 5	0 – 10	0 – 10

1008 FINE AGGREGATES

For masonry work, sand shall conform to the requirements of IS:2116.

Natural sand, crushed stone sand or crushed gravel sand or a suitable combination of natural sand, crushed stone or gravel, shall be used as fine aggregates in plain, reinforced and prestressed concrete works. The fine aggregates shall be dense, durable, clean and free from veins and adherent coating and other deleterious substances. They shall not contain dust, lumps, soft or flaky materials, mica or other deleterious materials in such quantities as to reduce the strength and durability of the concrete, or to attack the embedded steel. Mechanised sand washing machines should be used to remove impurities from sand. Fine aggregates having positive alkali-silica reaction shall not be used. All fine aggregates shall conform to IS:383 and tests for conformity shall be carried out as per IS:2386, (Parts I to VIII). The Contractor shall submit to the Engineer the entire information indicated in Appendix A of IS:383. The fineness modulus of fine aggregate shall neither be less than 2.0 nor greater than 3.5.

Fine aggregate for structural concrete shall conform to the following grading requirements:

Table 1000-2 : Grading Requirements of Fine Aggregates

IS Sieve Size	Percent Passing for		
	Grading Zone I	Grading Zone II	Grading Zone III
10 mm	100	100	100
4.75 mm	90-100	90-100	90-100
2.36 mm	60-95	75-100	85-100
1.18 mm	30-70	55-90	75-100
600 micron	15-34	35-59	60-79
300 micron	5-20	8-30	12-40
150 micron	0-10	0-10	0-10

Note : When the grading falls outside the limits of any particular grading zone of sieves other than 600-micron IS Sieve by a total amount not exceeding 5 percent, it shall be regarded as falling within that grading zone. However for crushed stone sand, the permissible limit on 150-micron IS Sieve is increased to 20 percent. Reference shall be made to Clause: 4.3 of IS:383.

1009 STEEL

1009.1 Cast Steel

The use of cast steel shall be limited to bearings and other similar parts. Steel for castings shall conform to Grade 280-520N of IS:1030. In case where subsequent welding is unavoidable

in the relevant cast steel components, the letter N at the end of the grade designation of the steel casting shall be replaced by letter W. To increase the corrosion resistance properties, 0.3% to 0.5% copper may be added.

1009.2 Steel for Prestressing

The prestressing steel shall conform to any one of the following standards:

a) Plain hard drawn steel wire conforming to IS:1785 (Part I) and IS:1785 (Part II)

b) Cold drawn indented wire conforming to IS:6003

c) High tensile steel bar conforming to IS:2090

d) Uncoated stress relieved strands conforming to IS:6006

e) Uncoated stress relieved low relaxation seven ply strand conforming to IS:14268

Data in respect of modulus of elasticity, relaxation loss at 1000 hours, minimum ultimate tensile strength, stress strain curve etc. shall be obtained from the manufacturer. Pre-stressing steel shall be subjected to acceptance tests prior to actual use in the works.

1009.3 Reinforcement/Untensioned Steel

1009.3.1 Reinforcing Bars

For plain and reinforced cement concrete (PCC and RCC) or prestressed concrete (PSC) works, the reinforcement/untensioned steel as the case may be, shall consist of the following grades of reinforcing bars.

Table 1000-3 : Grades of Reinforcing Bars

Grade Designation	Bar Type Conforming to Governing Specifications	IS Characteristic Strength fy MPa	Elastic Modulus GP
Fe240	IS:432 Part I Mild Steel	240	200
Fe 415	IS:1786 High Strength Deformed Steel Bars (HSD)	415	200
Fe 500 or Fe 500D	IS:1786 High Strength Deformed Steel Bars (HSD)	500	200
Fe 550 or Fe 550D	IS:1786 High Strength Deformed Steel Bars (HSD)	550	200
Fe 600	IS:1786 High Strength Deformed Steel Bars (HSD)	600	200

Note : If any grade of steel given in the above table is not available steel of next higher grade may be used.

All steel shall be procured from 'Original producers' who manufacture billets directly from iron ores and roll the billets to produce steel conforming to IS:1786. No re-rolled steel shall

be incorporated in the works. However, in case the original producers give certificate that they are unable to supply the steel within the required time period or that they are not producing bars of the required diameter, the Engineer may allow the procurement of steel from other suppliers, provided that the reinforcement is manufactured from billets procured from the original producers. In such cases, the manufacturer's certificate alone shall not be considered as sufficient and the steel shall be got tested by the Engineer in the NABL accredited laboratories only, as a third party check. It shall be ensured that all the test results conform to IS:1786 requirements.

Only new steel shall be delivered to the site. Every bar shall be inspected before assembling on the work and defective, brittle or burnt bars shall be discarded. Bars with cracked ends shall be discarded.

For the steel procured from original producers also, the Engineer / Employer may carry out occasional checks on materials through third party as mentioned above, for confirming the test results shown in the certificates, in case of any doubt regarding the quality of steel supplied.

1009.3.2 Coating of Reinforcing Bars

1009.3.2.1 Fusion Bonded Epoxy Coated Reinforcement

Fusion bonded epoxy coated reinforcement shall conform to IS:13620 or other international standards as approved by Engineer. The location of the source of supply of the coated bars shall be such as to ensure that the bars are not transported for a distance of more than 300 Km.

Additional requirements for the use of such reinforcement bars are given below:

a) Patch up materials shall be procured in sealed containers with certificates from the agency who has supplied the fusion bonded epoxy bars.

b) PVC coated G.I. binding wires of 18G shall only be used in conjunction with fusion bonded epoxy bars.

c) Chairs for supporting the reinforcement shall also be of fusion bonded epoxy coated bars.

d) The cut ends and damaged portions shall be touched up with repair patch up material.

e) The bars shall be cut by saw-cutting and not by flame cutting.

f) While bending the bars, the pins of work benches shall be provided with PVC or plastic sleeves.

g) The coated steel shall not be directly exposed to sun rays or rains and shall be protected with opaque polyethylene sheets or such other approved materials.

h) While concreting, the workmen or trolley shall not move directly on coated bars but shall move only on wooden planks placed on the bars.

1009.3.2.2 Hot Dipped Galvanized Bars

Hot dipped galvanized reinforcing steel shall be provided wherever specified. The coating shall conform to IS:12594–1988.

1009.4 Grey Iron Castings

Grey Iron castings to be used for bearings shall have the following minimum properties:

i)	Minimum ultimate tensile strength	370 MPa
ii)	Modulus of Elasticity	147000 MPa
iii)	Brinell Hardness	230 MPa
iv)	Shear Strength	370 MPa
v)	Compressive Strength	1370 MPa

The testing shall be as specified in IS:210.

1009.5 Steel Forgings

Forged steel pins shall comply with clause 3, 3A or 4 of IS:1875 and steel forgings shall comply with clause 3, 3A or 4 of IS:2004. Raw materials of the forging shall be as per IS:1875 with minimum reduction ratio of 1.8:1. Alternatively, if forging is made from ingot, the minimum reduction ratio shall be 4:1. Forging shall be normalized.

1009.6 Structural Steel

Unless otherwise permitted, all structural steel shall, before fabrication, comply with the requirements of the following Indian Standards:

IS:226	:	Structural Steel (Standard Quality)
IS:961	:	Structural Steel (High Tensile)
IS:2062	:	Weldable Structural Steel
IS:8500	:	Weldable Structural Steel (medium and high strength qualities)

IS:1148	:	Hot rolled rivet bars (upto 40 mm dia) for structural purposes
IS:1149	:	High tensile rivet bars for structural purposes
IS:1161	:	Steel tubes for structural purposes
IS:4923	:	Hollow Steel sections for structural use
IS:11587	:	Structural weather resistant steel
IS:808	:	Specifications for Rolled Steel Beam, Channel and Angle Sections
IS:1239	:	Mild Steel Tubes
IS:1730	:	Dimension for Steel Plate, sheet and strip for structural and general Engineering purposes.
IS:1731	:	Dimension for Steel flats for structural and general engineering purposes
IS:1732	:	Dimension for round and square steel bars for structural and general engineering purposes.
IS:1852	:	Rolling and cutting tolerances for hot rolled steel products

The use of structural steel not covered by the above standards may be permitted with the specific approval of the Engineer. Refer to Section 1900 of these Specifications for further details.

1009.7 Stainless Steel

Stainless steel shall be austenitic chromium-nickel steel, possessing rust, acid and heat resistant properties conforming to IS:6603 and IS:6911. Mechanical properties/grade for such stainless steel shall be as specified by the accepting authority, but in no case inferior to mild steel. Generally, stainless steel is available as per AISI grades. AISI 304 which is equivalent to grade 04 Cr 18 Ni 110 of IS:6911 satisfies the requirements for mechanical properties of structural steel. Other grades of stainless steel for specific purposes may be provided as per specific requirements. For application in adverse/corrosive environment, stainless steel shall conform to AISI 316L or 02G17 Ni Mo2 of IS:6911.

1010 WATER

Water used for mixing and curing shall be clean and free from oils, acids, alkalis, salts, sugar, organic materials or other substances that may be deleterious to concrete or steel.

In case of doubt regarding development of strength, the suitability of water proposed to be used for the production of concrete shall be ascertained by carrying out tests for the compressive strength of concrete and initial setting time of cement using the same water.

The sample of water taken for testing shall represent the water proposed to be used for concreting, taking into account seasonal variations, if any. The sample shall not receive any treatment before testing other than that being given to the regular supply of water proposed for use in concrete. The sample shall be stored in a clean container previously rinsed out with similar water.

Average 28 days compressive strength of at least three 150 mm concrete cubes prepared with water proposed to be used, shall not be less than 90 percent of the average strength of three similar concrete cubes prepared with distilled water. The cubes shall be prepared, cured and tested in accordance with the requirements of IS:516.

The initial setting time of test block made with the appropriate cement and the water proposed to be used shall not be less than 30 minutes and shall not be more than 30 minutes from the initial setting time of control test block prepared with the same cement and distilled water. The test blocks shall be prepared and tested in accordance with the requirements of IS:4031 (Part 5).

pH value of water shall not be less than 6. Potable water is generally considered satisfactory for mixing concrete. Mixing and curing with sea water shall not be permitted.

As a guide, the following concentrations represent the maximum permissible values:

a) To neutralize 100 ml sample of water, using phenolphthalein as an indicator, it should not require more than 5 ml of 0.02 normal NaOH. For details of test refer IS:3025(Part 22).

b) To neutralize 100 ml sample of water, using mixed indicator, it should not require more than 25 ml of 0.02 normal. H_2SO_4. For details of test refer IS: 3025(Part 23).

c) The Permissible limit's for solids shall be as follows

	Tested as Per	Permissible Limit max
Organic	IS:3025(Pt.18)	200 mg/lit
Inorganic	IS:3025(Pt.18)	3000 mg/lit
Sulphates (SO_3)	IS:3025(Pt.28)	400 mg/lit
Chlorides (Cl)	IS:3025(Pt.32)	2000 mg/lit for concrete work not containing embedded steel and 500 mg/lit for prestressed/reinforced concrete work
Suspended matter	IS:3025(Pt.17)	2000 mg/lit

All samples of water (including potable water) shall be tested and suitable measures taken, where necessary, to ensure conformity of the water to the requirements stated herein.

1011 TIMBER

The timber used for structural purposes shall conform to IS:883.

1012 CONCRETE ADMIXTURES

1012.1 General

Admixtures may be added to the concrete before or during mixing with a view to modifying one or more of the properties of concrete in the plastic or hardened state.

1012.2 Mineral Admixtures

Any of the following mineral admixtures may be used as part replacement of Portland Cement with the approval of the Engineer.

Fly ash: conforming to of IS:3812-3

Granulated slag: Ground granulated slag obtained by grinding granulated slag conforming to IS:12089.

Silica fume: Silica fume is very fine, non- crystalline SiO_2, obtained as a by-product of Silicon and Ferro – Silicon alloy industries and shall conform to IS:15388

1012.3 Chemical Admixtures

1012.3.1 Information Required from the Manufacturer

Chemical admixtures are proprietary items of manufacture and shall be obtained only from established manufacturers with proven track record, quality assurance and full fledged laboratory facilities for the manufacture and testing of concrete.

The contractor shall provide the following information concerning each admixture, after obtaining the same from the manufacturer:

a) Normal dosage and detrimental effects, if any, of under dosage and over dosage.

b) The chemical names of the main ingredients.

c) The chloride content, if any, expressed as a percentage by weight of the admixture.

d) Values of dry material content, ash content and relative density which can be used for Uniformity Tests.

e) Whether it leads to the entrainment of air when used as per the manufacturer's recommended dosage, and if so to what extent.

f) Confirmation regarding its compatibility with type of cement.

g) Whether it increases the risk of corrosion of reinforcement or other embedments.

h) Whether it affects the durability of concrete adversely.

1012.3.2 Physical and Chemical Requirements

Admixtures shall conform to the requirements of IS:9103. In addition, the following conditions shall be satisfied.

a) "Plasticisers" and "Super-Plasticisers" shall meet the requirements indicated for "Water reducing Admixture".

b) Except where resistance to freezing and thawing and to disruptive action of deicing salts is required, the air content of freshly mixed concrete in accordance with the pressure method given in IS:1199, shall not be more than 2 percent higher than that of the corresponding control mix and in any case not more than 3 percent of the test mix.

c) The chloride content of the admixtures shall not exceed 0.2 percent when tested in accordance with IS:6925. In addition, the maximum permissible limit of chloride content of all the constituents as indicated in Section 1700 of these Specifications shall also not be exceeded.

d) Uniformity tests on the admixtures are essential to compare qualitatively the composition of different samples taken from batch to batch or from the same batch at different times.

   The tests that shall be performed along with permissible variations are as follows:

   i) Dry Material Content : within 3 percent and 5 percent of liquid and solid

   ii) Ash content : within 1 percent of the value stated by the manufacturer.

   iii) Relative Density (for liquid admixtures) : within 2 percent of the value stated by the manufacturer.

e) All tests relating to concrete admixtures shall be conducted periodically at an independent laboratory and the results compared with the data given by the manufacturer.

1013 REINFORCED AND PRESTRESSED CONCRETE PIPES

Reinforced concrete pipes for highway structures shall be of NP4 type conforming to the requirements of IS:458. Prestressed concrete pipes (NP4) conforming to IS: 784 can also be used depending on the requirement.

1014 STORAGE OF MATERIALS

1014.1 General

All materials shall be stored at proper places so as to prevent their deterioration, intrusion of foreign matter and ensure their satisfactory quality and fitness for the work. The storage space must also permit easy inspection, removal and re-storage of the materials. All such materials, even though stored in approved godowns/places, must be subjected to acceptance test prior to their immediate use.

1014.2 Bricks

Bricks shall not be dumped at site, but shall be stacked in regular tiers as they are unloaded, to minimize breakage and defacement. Bricks selected for use in different situations shall be stacked separately. Sufficient supply of bricks as required for the works, shall be available at site at any time.

1014.3 Aggregates

Aggregate stockpiles may be made on ground that is hard, well drained and devoid of vegetation.

Coarse aggregates, unless otherwise agreed by the Engineer in writing, shall be delivered to the site in separate sizes (2 sizes when nominal size is 25 mm or less and 3 sizes when the nominal size is 32 mm or more). In case of aggregates placed directly on the ground the material in the stock pile only up to a level of 30 cm above the ground level shall be taken out and used initially. Remaining material shall be permitted to be used in the final stages of work only after it has been fully cleaned.

1014.4 Cement

Cement shall be transported, handled and stored on the site in such a manner as to avoid deterioration or contamination. Cement shall be stored above ground level in perfectly dry and water-tight sheds and shall be stacked to a height of not more than eight bags. Wherever bulk storage containers are used, their capacity should be sufficient to cater to the requirement at site. The containers shall be cleaned at least once every 3 months.

Cement shall be used in the sequence in which it is delivered at site. Each consignment shall be stored separately so that it may be readily identified and inspected. Any consignment or part of a consignment of cement which has deteriorated in any way during storage, shall not be used in the works and shall be removed from the site by the Contractor at his own cast.

The Contractor shall prepare and maintain proper records at site in respect of delivery, handling, storage and use of cement and these records shall be available for inspection by the Engineer at all times.

The Contractor shall submit a monthly return to the Engineer showing the quantities of cement received and issued during the month and in stock at the end of the month.

1014.5 Reinforcement/Untensioned Steel

The reinforcement bars, shall be stored above the surface of the ground upon platforms, skids or other supports, and shall be protected from mechanical injury and from deterioration by exposure.

1014.6 Prestressing Materials

All prestressing steel, sheathing, anchorages and sleeves or couplers shall be protected during transportation, handling and storage. The prestressing steel, sheathing and other accessories shall be stored under cover from rain or damp ground and protected from the ambient atmosphere if it is likely to be aggressive. Period of storage at site must be kept to the absolute minimum.

a) **Tendons :** Wires, strands and bars from which tendons are to be fabricated shall be stored about 300 mm above the ground in a suitably covered and closed space so as to avoid direct climatic influences and to protect them from splashes from any other materials and from the cutting operation of an oxy-acetylene torch or arc welding process in the vicinity. Under no circumstances shall tendon material be subjected to any welding operation or on site heat treatment or metallic coating such as galvanizing. Storage facilities and the procedures for transporting material into or out of the store, shall be such that the material does not become kinked or notched. Wires or strands shall be stored in large diameter coils which enable the tendons to be laid out straight. As a guide, for wires above 5 mm dia, coils of about 3 m dia without breaks or joints shall be obtained from manufacturer. Protective wrapping for tendons shall be chemically neutral. All prestressing steel must be provided with temporary protection during storage.

b) **Anchorage Components :** The handling and storing procedures shall maintain the anchorage components in a condition in which they can

subsequently perform their function to an adequate degree. Components shall be handled and stored so that mechanical damage and detrimental corrosion are prevented. The corrosion of the gripping and securing system shall be prevented. The use of correctly formulated oils and greases or of other corrosion preventing material, shall be guaranteed by the producer to be non-aggressive and non-degrading.

Prestressing steel which shall be absolutely clean and without any signs of rust, shall be stored in a closed store having single door with double locking arrangements and no windows. The air inside the store shall be kept dry as far as possible by using various means to the satisfaction of the Engineer, so as to eliminate the possibility of initial rusting of prestressing steel during storage. Instrument measuring the air humidity shall be installed inside the store. The prestressing steel shall be coated with water-soluble grease.

All prestressing steel shall be stored at least 300 mm above ground level and shall be invariably wrapped with a protective covering of tar paper or polythene or any other approved material.

The Contractor should ensure that prestressing steel is used within 3 months of it's manufacture. He should chalk out his prestressing programme in such a manner as to avoid the possibility of initial corrosion before placing in position.

1014.7 Water

Water shall be stored in containers/tanks covered at top and cleaned at regular intervals in order to prevent intrusion of foreign matter or growth of organic matter. Use of water from shallow, muddy or marshy sources, shall not be permitted. The intake pipe shall be suitably enclosed to exclude silt, mud, grass and other solid materials and there shall be a minimum depth of 0.60 m of water below the intake at all times.

1015 TESTS AND STANDARD OF ACCEPTANCE

All materials, even though stored in an approved manner shall be subjected to an acceptance test in accordance with the relevant IS specification prior to their immediate use.

Independent testing of cement for every consignment shall be done by the Contractor at site or in the laboratory approved by the Engineer before use. Any cement with lower quality than that shown in manufacturer's certificate shall be debarred from use. In case of imported cement, the same series of tests shall be carried out before acceptance.

1015.1 Testing and Approval of Material

The Contractor shall furnish test certificates from the manufacturer/supplier of materials along with each batch of material(s) delivered to site.

The Contractor shall set up a field laboratory with necessary equipment for testing of all materials, finished products used in the construction as per requirements of conditions of contract and the relevant specifications. The testing of all the materials shall be carried out by the Engineer for which the shall make all the necessary arrangements and bear the entire cost.

Test which cannot be carried out in the field laboratory have to be got done at the Contractor's cost at any recognized laboratory/testing establishments approved by the Engineer.

1015.2 Sampling of Materials

Samples provided to the Engineer for inspection are to be in labelled boxes suitable for storage.

Samples required for testing and approval must be supplied well in advance by at least 48 hours or before the minimum period required for carrying out the relevant tests. Delay to works arising from the late submission of samples, will not be acceptable as a reason for delay in completion of the works.

If materials are brought from abroad, the cost of sampling/testing whether in India or abroad shall be borne by the Contractor.

1015.3 Rejection of Materials not Conforming to the Specifications.

Any stack or batch of material(s) of which sample(s) does (do) not conform to the prescribed tests and quality shall be rejected by the Engineer and such materials shall be removed from site by the Contractor at his own cost. Such rejected materials shall not be made acceptable by any rectifications.

1015.4 Testing and Approval of Plant and Equipment

All plants and equipment used for preparing, testing and production of materials for incorporation into the permanent works, shall be in accordance with manufacturer's specifications and shall be got approved by the Engineer before use.

1100

PILE FOUNDATIONS

1101 DESCRIPTION

1101.1 This work shall consist of construction of all types of piles for structures in accordance with the details shown on the drawings and conforming to the requirements of these Specifications or as directed by the Engineer.

1101.2 The construction of pile foundations requires a careful choice of the piling system depending on subsoil conditions and loading characteristics and type of structure. The permissible limits of total and differential settlements, unsupported length of pile under scour, impact/entanglement of floating bodies and any other special requirements of project, are also equally important criteria for selection of the piling system. The method of installing the piles, including details of the equipment shall be submitted by the Contractor and got approved from the Engineer before commencement of work.

1101.3 The work shall be carried out as per IS:2911 except as modified herein.

1102 SUBSURFACE INVESTIGATIONS

1102.1 The complete subsurface investigations of strata in which pile foundations are proposed shall be carried out in advance along with in-situ pile tests. For details of geo-technical subsurface explorations, refer Section 2400 of these Specifications.

Borings should be carried up to sufficient depths so as to ascertain the nature of strata around the pile shaft and below the pile tip. Depth of boring shall not be less than:

i) 1.5 times estimated length of pile in soil or 15 m below the proposed founding level

ii) 15 times diameter of pile in ordinary / jointed rock but minimum 15 m in such rock

iii) 4 times diameter of pile in hard rock but minimum 3 m in such rock

1102.2 The subsurface investigations shall adequately define stratification of substrata including the nature and type of strata, their variation, extent and specific properties. The investigations shall be adequate for the purpose of selection of appropriate piling system and for estimating design capacities for different diameters and length of piles.

1102.3 Pressure meter tests may be used in the case of rock, ground or soil for direct evaluation of strength and compressibility characteristics. Though these tests are of specialized nature, they are more appropriate for difficult/uncertain substrata and especially for important projects.

1102.4 For piles socketed into rock, it is necessary to determine the uni-axial compressive strength of the rock and its quality.

The investigations shall also include location of ground water table and other parameters including results of chemical tests showing sulphate and chloride content and any other deleterious chemical content in soil and/or ground water, likely to affect durability.

1103 TYPE OF PILES

1103.1 Piles may be of reinforced concrete, prestressed concrete, steel or timber and circular, square, hexagonal, octagonal, "H" or "I" Section in shape. They may be of solid or hollow sections or steel cases filled with concrete. Timber piles may be used for temporary bridges. Cast in-situ concrete piles may be driven cast in-situ or bored cast in-situ. Similarly, precast concrete piles also may be driven precast or bored precast. In bored precast piles, precast piles are lowered into pre-formed bores and annular space grouted.

1103.2 Minimum diameter of concrete pile shall be 1 m for river/marine bridges. For bridges beyond the water zone and bridges on land, the minimum diameter may be 750 mm.

1104 MATERIALS

1104.1 The basic materials shall conform to Section 1000 of these Specifications. The specifications for steel reinforcement, structural concrete, prestressed concrete and structural steel to be used in pile foundations shall conform to Sections 1600, 1700, 1800 and 1900 respectively of these Specifications.

1104.2 Concrete in Piles

For both precast and cast in in-situ piles, the grade of concrete, minimum cement content, water cement ratio and slump at the time of placement shall be as per Table 1100-1 :

Table 1100-1 : Requirements for Concrete in Piles

	Cast in-situ Concrete by Tremie	Precast Concrete
Grade of concrete	M 35	M 35
Minimum cement content	400 kg/m^3	400 kg/m^3
Minimum water cement ratio	0.4	0.40
Slump (mm) as measured at the time of placement	150-200	50 - 75

The terms 'minimum cement content' and 'minimum water cement' ratio mentioned Table 1100-1, are to be based on total cementitious material (inclusive of all mineral admixtures called additives) mentioned in Clause 1007 of these Specifications. Maximum limits for such additives shall be as specified in Clause 1716.2 of these Specifications.

High alumina cements (i.e. quick setting cement) shall not be used in marine conditions. When both chlorides and sulphates are present, in soil or ground water, sulphate resistant cement shall not be used. For improving resistance against the penetration of chlorides and sulphates from surrounding soils or water, mineral admixtures such as fly ash, silica fumes, GGBS conforming to respective BIS/International Standards and as per IRC:112, may be used.

1105 TEST PILES

1105.1 Test piles which are shown on the drawings or specified in the contract or installed by the Contractor on his own to determine the lengths of piles to be furnished, shall conform to the requirements for piling as indicated in these Specifications. Test piles which are used to arrive at the load carrying capacity shall not be incorporated in the structure.

All test piles shall be installed with the same type of equipment that is proposed to be used for piling in the actual structure.

Test piles which are not to be incorporated in the completed structure shall be removed to at least 600 mm below the proposed soffit level of pile cap and the remaining hole so formed shall be backfilled with earth or other suitable material.

The piles shall be load tested in accordance with provisions laid down in this Section.

1106 PRECAST CONCRETE PILES

1106.1 General

Precast concrete piles shall be of the size and shape as shown in the approved drawings. If a square section is employed, the corners shall be chamfered by at least 25 mm unless otherwise specified on the drawings. The length of pile shall not normally exceed 25 m. However, where special equipments for handling and installation are available to the satisfaction of the Engineer, longer length could be permitted.

1106.2 Stacking, Storing and Handling

Care shall be taken that at all stages of transporting, lifting and handling, the piles are not damaged or cracked. During transport and stacking of piles, they shall be supported at the same points as those provided for lifting purposes. If the piles are put down temporarily during handling, they shall be placed on trestles or blocks located at the same points.

Piles shall be stored at least 300 mm above firm level ground, which is not liable to unequal subsidence or settlement under the weight of the stack of piles. They shall be placed on timber supports which are level and spaced so as to avoid bending. The supports in different layers, shall be vertically one above the other. Spaces shall be left round the piles to enable

them to be lifted without difficulty. The order of stacking shall be such that the older piles can be withdrawn without disturbing newer piles. Separate stacks shall be provided for different lengths of piles. Where piles are stacked in layers, the number of layers shall not exceed three. Whenever curing is needed during storage, arrangements shall be made to enable the piles to be watered. For detailed precautions with regard to curing operations for structural concrete, refer Section 1700 of these Specifications.

Before the operation of handling and driving the piles, the minimum periods counted from the time of casting shall be as indicated in Table 1100-2. Prestressed pile shall not be lifted or handled until fully stressed.

Table 1100-2 : Time for Curing Precast Piles

Type of Cement Used in Casting the Pile	Minimum Periods from Time of Casting			
	Strike Side-Shutters (Hours)	End of Wet Curing (Days)	Lift from Bed (Days)	Casting Drive (days)
Ordinary Portland	24	7	10	28
Rapid hardening Portland	12	7	7	10

1106.3 Lengthening of Piles

Where a pile is to have additional length cast on it during driving, the longitudinal reinforcement shall preferably be joined by full penetration butt welding. The concrete at the top of the original pile shall be cut down to expose not less than 200 mm of the bars to avoid spalling of the concrete by heat of welding. The added bars have to be held accurately and rigidly in position during welding. Where facilities on site are insufficient to make proper butt welding practicable, the joint may be made by lapping. The reinforcement at the head of pile will need to be exposed for full anchorage length or 600 mm whichever is greater and the new bars over-lapped for this distance. Unless otherwise specified, the extension of the pile shall be formed to the same cross-sectional profile and with concrete of at least the same strength as that specified for the original pile. The stirrup spacing shall in no case be greater than 150 mm. Not more than one extension shall be permitted. In case more than one extension is permitted by the Engineer, only approved mechanical couplers shall be used.

Driving shall not be resumed until:

a) The strength of the concrete in the extension is at least equal to the specified characteristic strength of concrete in pile; and

b) The approval of the Engineer has been obtained.

1106.4 Removal of Surplus Length

Any length of pile surplus to that required for incorporation in the structure shall be cut off neatly and removed. During the process of cutting off, it shall be ensured that projecting reinforcement to be anchored into the pile cap and the prestressing strands/wires are not damaged. When stripping prestressed concrete piles, sudden release of tendons shall be avoided. Reference may also be made to Clause 7.7.1 of IS:2911 (Part I, Section 3) in this connection.

1106.5 Risen Piles

Level of top of each pile shall be taken after driving and again after all the piles are driven. Piles which are found to have risen due to ground heave or as a result of driving adjacent piles, shall be re-driven to the original depth or resistance unless re-driving tests on adjacent piles have shown this to be unnecessary.

1106.6 Manufacture

The pile should be cast in one continuous operation from end to end of each pile. Manufacture of precast concrete piles shall conform to the guidelines contained in Clause 7.1, 7.2 and 7.3. or IS:2911 (Part I, Section 3).

Piles shall be provided with suitable metal shoe for protecting the tip of the pile during driving in hard ground.

Piles shall not be moved from casting bed until the concrete has hardened sufficiently.

Piles shall not be driven in less than 28 days after casting or unless their strength at the time of driving is at least that specified for 28 days.

1106.7 Prestressed Concrete Piles

Additional specifications for precast prestressed concrete piles shall conform to those contained in Clause 8 of IS:2911 (Part I, Section 3).

1107 CAST IN-SITU CONCRETE PILES

1107.1 General

Cast in-situ concrete piles may be either installed by drilling a bore into the ground and removing the material or by driving a metal casing with a shoe at the tip and displacing

the material laterally. The two types of piles are termed as "bored piles" and "driven piles" respectively. Cast in-situ concrete piles may be cast in metal shells which may remain permanently in place. However, other types of reinforced concrete cast in-situ piles, cased or uncased, may be used if in the opinion of the Engineer the soil conditions permit their use and if their design and the methods of placing are satisfactory.

Certain specific requirements regarding driving of cast in-situ driven piles shall be as per Clauses 1110 and 1111.

Any liner or borehole which is improperly located or shows partial collapses that would affect the load carrying capacity of the pile, shall be rejected or repaired as directed by the Engineer at the cost of the Contractor.

Boring shall be carried out using rotary equipment. Percussion type of equipment shall be used only if approved by the Engineer.

The diameter of the finished pile shall not be less than that specified. A continuous record shall be kept by the Engineer as to the volume of concrete placed in relation to the length of pile that is cast.

Defective piles shall be removed or left in place as judged convenient without affecting the performance of adjacent piles or pile cap. Additional piles shall be provided to replace the defective piles.

1107.2 Concreting

Wherever practicable, concrete should be placed in a clean dry hole. Prior to the placing of the reinforcement cage, the pile shaft shall be cleaned of all loose materials. Before concreting of the pile is commenced, it is essential to ensure that no debris remains at the bottom of the shaft, as inadequate cleaning of the base can lead to formation of a soft base or soft toe which may result in reduction of load bearing capacity of the pile.

Reinforcement for the pile as shown on the drawing shall be tied in place to form a cage which is lowered into the pile shaft. Suitable spacers shall be provided to maintain the required cover to reinforcing steel. Reinforcements at the bottom should not be provided with L-bends as these may interfere with cleaning of the pile base.

Where concrete is placed in dry and a casing is present, the top 3 m of the pile shall be compacted using internal vibrators.

Where the casing is withdrawn from cohesive soils for the formation of cast in-situ pile, the concreting should be done with necessary precautions to minimize the softening of the soil by excess water. Where mud flow conditions exist, the casing of cast in-situ piles shall not be allowed to be withdrawn.

Care shall be taken during concreting to prevent the segregation of the ingredients. The displacement or distortion of reinforcement during concreting and while extracting the casing, shall also be avoided.

If the concrete is placed inside precast concrete tubes or consists of precast sections, these shall be free from cracks or other damage before being installed.

The concrete shall be properly graded, shall be self-compacting and shall not get mixed with soil, excess water, or other extraneous matter. Special care shall be taken in silty clays and other soils which have the tendency to squeeze into the newly deposited concrete and cause necking. Sufficient head of green concrete shall be maintained to prevent inflow of soil or water into the concrete.

The placing of concrete shall be a continuous process from the toe level to the top of the pile. To ensure compaction by hydraulic static heads, rate of placing concrete in the pile shaft shall not be less than 6 m (length of pile) per hour.

1107.3 Casing

When concreting is carried out for a pile, a temporary casing should be installed to sufficient depth so as to ensure that fragments of soil from the sides of the hole do not drop into the concrete as it is placed. When the bore hole is stabilized using drilling mud, the temporary casing is not required except near the top.

The metal casing shall be of sufficient thickness and strength to hold its original form and show no harmful distortion while driving or when adjacent casings are driven.

Cast in-situ concrete driven piles shall be installed using a properly designed detachable shoe at the bottom of the casing.

Bored cast in-situ piles in soils which are stable, may often be installed with only a small casing length at the top. A minimum of 2 m length of top of bore shall invariably be provided with casing to ensure against loose soil falling into the bore. In cases in which the side soil can fall into the hole, it is necessary to stabilize the side of the bore hole with drilling mud, or a suitable steel casing. Permanent steel liner shall be provided at least up to maximum scour level. The minimum thickness of steel liner shall be 6 mm.

Permanent steel liner shall be provided for the full depth of the pile in the following situations where:

i) The surrounding soil is marine clay

ii) Soft soil is present

iii) Surrounding soil has sulphate content equal to or more than 1%

iv) Surrounding water has sulphate content equal to or more than 2500 ppm

v) Leakage of sewage is expected

For bored cast in-situ piles, casing/liner shall be driven open ended with a pile driving hammer capable of achieving penetration of the liner to the depth shown on the drawing or as approved by the Engineer. Materials inside the casing shall be removed progressively by air lift, grab or percussion equipment or other approved means.

Where bored cast in-situ piles are used in soils liable to flow, the bottom of the casing shall be kept sufficiently in advance of the boring tool to prevent the entry of soil into the casing, leading to formation of cavities and settlements in the adjoining ground. The water level in the casing should generally be maintained at the natural ground water level for the same reasons. The joints of the casing shall be made as leak-tight as possible to minimize inflow of water or leakage of slurry during concreting.

The diameter of the boreholes shall not be more than the inside diameter of the liner when the liners are installed before boring. When the liners are installed after boring, the diameter of the boreholes shall not be more than the outside diameter of liner + 2 mm, unless otherwise approved by Engineer.

1107.4 Use of Tremie

The concrete should invariably be poured through a tremie with a funnel, so that the concrete can be properly deposited in the hole without segregation. For concreting done by tremie, the following requirements which are particularly applicable shall be ensured:

a) The hopper and tremie should be a leak proof system.

b) Diameter of tremie shall be not less than 200 mm for use with 20 mm diameter down aggregate.

c) The first charge of concrete should be placed with a sliding plug pushed down the tube ahead of it or with a steel plate with adequate charge to prevent mixing of concrete and water. However, the plug should not be left in the concrete as a lump.

d) The tremie pipe should always penetrate well into the concrete with an adequate margin of safety against accidental withdrawal of the pipe. The tremie should be always full of concrete.

e) The pile should be concreted wholly by tremie and the method of deposition should not be changed part way up the pile, to prevent laitance from being entrapped within the pile.

f) All tremie tubes shall be thoroughly cleaned after use.

g) For concrete placed through tremie, there is no need to add 10 percent extra cement.

h) Concreting of piles shall be carried out continuously. In exceptional cases of interruption of concreting the tremie shall not be taken out of the concrete under any circumstances. The tremie pipe shall be raised and lowered slowly from time to time to prevent it from getting stuck in the concrete while ensuring its lower and does not come out of concrete. The concreting shall be resumed before final setting time of concrete, which shall be established before the start of the piling operation. For achieving longer setting time of the concrete, super plasticizers having retarding properties/retarders can be used. If any of these requirements are not met, the pile shall be rejected.

1107.5 Removal of Concrete above Cut-off Level

It is desirable that the concrete above cut-off level, is removed before the concrete is set. This may be done manually or by specially made bailer or other device. Such removal of concrete helps in preventing the damage of the good concrete below the cut-off level, which results from chipping by percussion method.

The removal of concrete shall be within ± 25 mm from the specified cut off level, preferably on the minus side. After removal of such concrete, the concrete shall be compacted with rammer with spikes or vibrated.

In case the concrete is not removed before setting, a groove shall be made on outer perimeter by rotary equipment before chipping by percussion method.

The minimum embedment of cast in-situ concrete piles into pile cap shall not be less then 50 mm. Any defective concrete at the head of the completed pile shall be cut away and made good with new concrete. The clear cover between the bottom reinforcement in pile cap from the top of the pile shall be not less than 25 mm. The reinforcement in the pile shall be exposed for full anchorage length to permit it to be adequately bonded into the pile cap. Exposing such length shall be done carefully to avoid damaging the rest of the pile.

1108 STEEL PILES

Steel piles shall be of “H” or “I” sections as shown on the drawings and shall be of structural steel conforming to Section 1000 of these Specifications.

Steel piles shall be protected by suitable anti-corrosive painting as specified on the drawing or as directed by the Engineer. Piles shall be stored above the ground having protective packing to minimize damage to surface coating. Each pile shall be supplied preferably in one piece without splices.

At the option of the Contractor, steel piles consisting of structural steel plates welded together may be substituted for the rolled sections specified, provided the depth, width and average thicknesses are at least equal to those of the rolled sections, the steel plates conform to **Section 1000** of these Specifications. The flanges shall be welded to the web with continuous fillet welds on either side of the web, and the welding shall conform to Clause 1904.8 of these Specifications.

The length of the steel pile may be built up in sections either before or during driving operations. The sections shall be of identical cross-section. Pile splices shall be made with full penetration butt welds over the whole cross-section. Pile splices shall develop at least the yield strength of pile.

The connections shall be made by butt welding the entire cross-section in accordance with the provisions in Clause 1904.8 of these Specifications. Care shall be taken to properly align the sections connected so that the axis of the pile will be straight. The number of welded connections in the length of pile shall be as few as possible.

1109 TIMBER PILES

The Engineer shall stamp each pile on the butt with a stamp which shall make an impression that is readily legible. Treated timber piles will be inspected by the Engineer after treatment. Untreated timber piles may be used as test piles. Treated timber piles shall be driven within 6 months after treatment.

Timber piles shall be furnished with tip protection and protected by the use of steel straps. Tip protection shall be suitable for use on timber piling of the size to be driven. Details of tip protection shall be furnished to the Engineer for review and approval before driving piles. Not less than 2 separate steel straps shall be placed within 600 mm of the butt of each pile after the pile is square cut. Not less than 2 separate steel straps shall be placed within 300 mm of the tip of each pile. Additional intermediate steel straps shall be placed at intervals of not more than 3 m measured along the length of the pile.

Timber piles which are to be capped shall be separately cut off so that true bearing is obtained on every pile. Piles inaccurately cut off shall be replaced. Splicing of timer piles shall not be permitted except by written permission of the Engineer.

1110 DRIVING EQUIPMENT

Piles or their casings may be driven with any type of drop hammer, diesel hammer or single-acting steam or compressed air hammer, provided they penetrate to the prescribed depth to attain the designed resistance without being damaged. The weight or power of the hammer should be sufficient to ensure a penetration of at least 5 mm per blow unless rock has been reached. It is always preferable to employ the heaviest hammer practicable and to limit the stroke, so as not to damage the pile. The minimum weight of the hammer shall be 2.5t. In

the case of precast concrete piles the mass of the hammer shall be not less than 30 times the mass of 300 mm length of pile.

Steam or air hammers shall be furnished along with boiler or air compressor of capacity at least equal to that specified by the manufacturer of the hammers. The boiler or air compressor shall be equipped with an accurate pressure gauge at all times. The valve mechanism and other parts of steam, air or diesel hammers shall be maintained in first class condition so that the length of stroke and number of blows per minute for which the hammer is designed, will be obtained. Inefficient steam, air or diesel hammers shall not be permitted to be used on the work.

1111 DRIVING

1111.1 General Procedure

Details of the equipment and the method proposed for driving the piles shall be submitted for scrutiny and approval of the Engineer. Piles shall be installed from firm ground or from temporary supports or from fixed platform. The arrangement shall provide sufficient rigidity to ensure accuracy of pile driving under all conditions of tide, stream flow or hammer drop.

During driving the top of pile shall be protected by a suitable helmet of substantial steel construction. The helmet shall provide uniform bearing across the top of the pile and shall hold the pile centrally under the hammer. No pile shall be driven unless inspected and approved by the Engineer.

Piles shall be driven from a fixed frame of sufficient rigidity to ensure accuracy of driving within specified tolerances. The force of the hammer shall be directed centrally and axially during driving. Forces producing undue bending or torsional stresses in piles shall not be applied during driving.

The stroke of a single acting or drop hammer shall be limited to 1.2 m unless otherwise permitted by the Engineer. A shorter stroke may be necessary when there is danger of damaging the pile.

Piles shall not be bent or sprung into position but shall be effectively guided and held on line during the initial stages of driving. Attempts to correct any tendency for the pile to run off line by the application of significant horizontal restraint will not be permitted. Shortly after the commencement of driving and at regular intervals throughout the driving operation, checks shall be made to ensure that the pile frame does not exert any undue lateral force on the pile due to restraint within the helmet.

If the indications are that a pile will finish outside the specified tolerances, driving operations on that pile will cease. The pile shall be withdrawn, the hole filled and the pile re-driven at the cost of the Contractor.

To avoid the possibility of premature "set-up", pile driving shall be continuous in the later stages, without any deliberate stops. (delays of an hour or less may lead to significant "set-up" in piles i.e. resistance to further driving increases after driving is stopped).

If any pile is damaged in any way during driving, it shall be repaired or replaced as directed by the Engineer, at the cost of the Contractor. If during driving, the head of a pile is damaged to the extent that further driving is not possible, the head shall be cut off and driving continued. The cost of cutting off shall be borne by the Contractor and where, as a result of such cutting off the head, the pile is too short, the Contractor, shall, at his own cost, supply and splice on sufficient length of pile to restore the pile to its correct length.

Piles should be driven to the minimum acceptable penetration shown on the drawings. This may require pre-boring and/or jetting as indicated in Clause 111.2, with the approval of the Engineer.

Piles shall be driven to nominal refusal or the required ultimate dynamic capacity mentioned on the drawings or until the top of the pile is at the level required and specified on the drawing whichever gives the lowest toe elevation. The Engineer's decision in these matters shall be final. Nominal refusal shall be taken as equivalent to 25 mm total penetration for the final 20 blows using a hammer of driving energy as specified and shall be used as the criterion for acceptance for piles founded on rock. Severe driving which results in an average set per blow less than 0.5 mm will not be permitted.

Where hard drilling is encountered because of dense strata or obstructions located above the predetermined pile tip level, nominal refusal shall not be considered to have been achieved unless the Engineer is satisfied that the total number of blows, as the average driving resistance specified for nominal refusal, indicates that further driving will not advance the pile through dense strata or obstructions.

The pile shall be driven as accurately as possible to the vertical or to specified batter. Straining the pile into position can damage it and the driving equipment should be adjusted as much as possible to follow the position of the pile. Any deviation from the proper alignment shall be noted and promptly reported to the Engineer. If the deviation is to such an extent that the resulting eccentricity cannot be taken care of by strengthening the pile cap or pile tips, such a pile shall, at the discretion of the Engineer, be replaced or supplemented by an additional pile. Unless otherwise specified, the permissible positional deviation for piles shall be limited to those indicated in Clause 1116.

Care shall be taken not to damage the pile by over-driving. Any sudden change in the rate of penetration which cannot be ascribed in the nature of the ground shall be noted and its cause ascertained, if possible, before driving is continued.

While withdrawing a casing used in the construction of cast in-situ pile, consideration shall be given to the possibility of damaging any other nearby pile. The danger of damaging is greater

in compact soils than in loose soils. No pile shall be bored or driven within 3 m of a newly cast pile until at least 24 hours after completion of its installation.

Driving piles in loose sand tends to compact the sand which in turn increases the skin friction. Therefore, driving a number of friction piles in a group shall proceed outward from the centre as otherwise it will be difficult to drive the inner piles to the same depth as the others.

In the case of stiff clay also, the driving for a group of piles shall proceed outward from the centre. However, in case of very soft soil, the driving may proceed from outside to inside, so that the soil is restrained from flowing out during driving operations.

If there is a major variation between the depth at which adjacent foundation piles in a group meet refusal, a boring shall be made nearby to ascertain the cause of this difference. If the boring shows that the soil contains pockets of highly compressive material below the level of the shorter pile, it will be necessary to enforce penetration of all the piles to a level below the bottom of the zone which shows such pockets.

1111.2 Pre-boring and Jetting

Driving of the piles may be assisted by pre-boring holes or by the use of jets or both, subject to the approval of the Engineer. These may be used essentially to achieve the minimum penetration shown on the drawings where such penetration is not reached under normal conditions of driving indicated in Clause 1111.1.

The diameter of the hole shall not be greater than the diagonal dimension of the pile less 100 mm.

The maximum depth of the pre-boring shall be such that the specified set (or less) is obtained when the toe of the pile is at founding level. Pre-boring shall be as approved by the Engineer and shall be carried out only up to a level of one metre above the founding level. The pile shall be driven for at least one metre below the pre-bored hole. To ensure that the pile is properly supported laterally in the hole, any space remaining around the pile at the ground level after driving is completed, shall be backfilled with approved granular material.

When water jetting is used, at least two jets shall be attached to the pile symmetrically. The volume and pressure of water at the outlet nozzles shall be sufficient to freely erode material adjacent to the toe of the pile. The maximum depth up to which jetting is carried out, shall be such that the specified set (or less) is obtained when the toe of the pile is at founding level. Jetting shall cease as directed by the Engineer and shall proceed only up to 1 m above the founding level. The pile shall be driven at least 1 m below the pre-bored hole.

To avoid very hard driving and vibration in materials such as sand, jetting of piles by means of water may be carried out only with the express permission of the Engineer and in such a

manner as not to impair the bearing capacity of piles already in place, the stability of the soil or the safety of any adjoining buildings. Details of the arrangement for jetting shall be got approved from the Engineer in advance.

If large quantities of water are used for jetting, provision shall be made for collecting and draining away of water when it comes to the surface of the ground, so that the stability of the piling plant is not endangered by the softening of the ground.

Jetting shall be stopped before completing the driving which shall always be finished by ordinary methods. Jetting shall be stopped if there is any tendency for the pile tips to be drawn towards the pile already driven owing to the disturbance of the ground.

1112 RAKER (INCLINED) PILES

The maximum rake to be permitted in piles shall not exceed the following:

I) 1 in 6 for all bored piles

ii) 1 in 6 for cast in-situ piles

iii) 1 in 4 for precast driven piles

1113 PILE TESTS

1113.1 Initial Load Test

i) The number of initial tests shall be determined by the Engineer taking into consideration the bore log and soil profile, design length, pile diameter and design pile capacity. However, it shall not be less than two for each category.

ii) Initial load test for axial load capacity, including uplift capacity if required, on trial piles of the same diameter as of the design pile, shall be carried out after 28 days design strength is achieved. The testing shall be done as per the procedure laid down in IS:2911, Part-IV. The load test shall be conducted for not less than 2½ times the design load. The initial load test shall be cyclic load test for piles deriving strength from end bearing and side friction. The maintained load test can be performed for end bearing piles which do not rely on friction and for piles socketed in rock;

iii) If the initial load test gives a capacity greater than 25 percent of the capacity calculated by static formula and if it is desired to take benefit of the higher capacity, another two load tests shall be carried out to confirm the earlier value and minimum of the three shall be considered

as initial load test value. The number of initial tests shall be determined by the Engineer taking into consideration the bore log and soil profile.

iv) Lateral load tests shall be carried out for estimating the lateral load capacity of the piles. The test procedure shall be carried out as per IS 2911 part IV. However the permissible deflection shall be as per IRC:78.

v) In particular cases where upper part of pile is likely to be exposed later due to scour, then the capacity contributed by that portion of the pile during load test, shall be accounted for.

1113.2 Routine Load Tests

Routine load test shall be carried out at actual locations of foundations of bridges to re-confirm or modify the allowable loads. The lateral load test may be conducted on two adjacent piles. However, results of routine load tests shall not be used for upward revision of design capacity of piles. The minimum number of tests to be conducted for confirming the capacity shall be as per **Table 1100-3**.

Table 1100-3 : Minimum Number of Tests

Total Number of Piles for the Bridge	Minimum Number of Test Piles
Upto 50	2
50-150	3
Beyond 150	2% of total piles (fractional number rounded to next higher integer number)

Note: The number of tests may be judiciously increased depending upon the variability of foundation strata. For determining the number of piles to be tested for the routine test the total no. of piles under all structures of left and right carriageway and the service road shall be taken together provided length and diameters of the piles are the same.

1113.3 Permissible Overload

While conducting routine test on one of the piles belonging to a pile group, if the pile capacity is found to be deficient (based on the settlement criteria of 12 mm for piles of diameter up to and including 600 mm and 2 percent of the pile diameter for piles of diameter more than 600 mm at 1.5 times the design load) an overload up to 10 percent of the capacity may be allowed.

1113.4 For a quick assessment of pile capacity, strain dynamic tests may be conducted after establishing co-relation using the results of load tests. However, results of strain dynamic tests shall not be used for upward revision of design capacity of pile. Detailed guidelines and references are given in IRC:78. These methods can be followed.

To have a fairly good idea about the quality of concrete and construction defects like voids, discontinuities etc., pile integrity tests are extensively conducted. Detailed guidelines in this connection are given in IRC:78.

1114 PILE CAP

Casting of pile cap should be at a level higher than low water level unless functionally required to be below low water level. In such cases dewatering shall be resorted to allow concreting in dry conditions. Pile caps shall be of reinforced concrete. A minimum offset of 150 mm shall be provided beyond the outer faces of the outermost piles in the group. If the pile cap is in contact with earth at the bottom, a leveling course of minimum 80 mm thickness of M 15 nominal mix concrete shall be provided. In marine conditions or areas exposed to the action of harmful chemicals, the pile cap shall be protected with a coating such as bituminous based coaltar epoxy or epoxy based coating or with suitable anti corrosive paint. Concrete with high alumina cement, shall not be used in marine environment.

The attachment of the pile head to the cap shall be adequate for the transmission of loads and forces. A portion of pile top may be stripped of concrete and the reinforcement anchored into the cap. Manual chipping may be permitted three days after casting of pile, while pneumatic tools for chipping shall be permitted only seven days after casting of pile. The top of pile after stripping shall project at least 50 mm into the pile cap.

The top of concrete in a pile shall be brought above cut-off level to permit removal of all laitance and weak concrete before pile cap is laid. This will ensure good concrete at the cut-off level.

1115 IMPORTANT CONSIDERATIONS, INSPECTION/PRECAUTIONS FOR DIFFERENT TYPES OF PILES

1115.1 Driven Cast In-Situ Piles

1115.1.1 Specialist literature and the guidelines from the pile construction industry shall be consulted regarding the method of installation, equipment and accessories for pile driving and recording of data.

1115.1.2 During installation of piles, the final "set" of penetration of pile per blow of hammer shall be checked taking an average of last 10 blows.

1115.1.3 The pile shoes which may be of either cast iron conical type or mild steel flat type shall have double reams for proper seating of the removable casing tube inside the space between the reams.

1115.1.4 Before commencement of pouring of concrete, it shall be ensured that there is no ingress of water in the casing tube from the bottom. Further, adequate control during withdrawal of the casing tube is essential so as to maintain sufficient head of concrete inside the casing tube at all stages of withdrawal.

1115.1.5 Concrete in piles shall be cast up to a minimum height of 600 mm above the designed top level of pile, which shall be stripped off at the time of construction of pile cap.

1115.2 Bored Cast In-Situ Piles

1115.2.1 While concreting uncased piles, voids in concrete shall be avoided and sufficient head of concrete is to be maintained to prevent inflow of soil or water into the concrete. It is also necessary to take precautions during concreting to minimize the softening of the soil by excess water. Uncased cast in-situ piles shall not be allowed where mudflow conditions exist.

1115.2.2 The drilling mud such as bentonite suspension shall be maintained at a level sufficiently above the surrounding ground water level throughout the boring process, to ensure the stability of the strata which is being penetrated until the pile has been concreted.

1115.2.3 Where bentonite suspension is used to maintain the stability of the borehole, it is essential that the properties of the material be carefully controlled at stages of mixing, supply to the borehole and immediately before concrete is placed. It is usual to limit :

i) The density of bentonite suspension to 1.05 g/cc

ii) The marsh cone viscosity between 30 and 40

iii) The pH value between 9.5 and 12

iv) The silt content less than 1 percent

v) The liquid limit of bentonite not less than 400 percent

These aspects shall act as controlling factors for preventing contamination of bentonite slurry for clay and silt.

1115.2.4 The bores shall be washed by bentonite flushing to ensure clean bottom at two stages viz. after completion of boring and prior to concreting after placing of reinforcement cage. Flushing of bentonite shall be done continuously with fresh bentonite slurry till the consistency of inflowing and outflowing slurry is similar.

1115.2.5 For concreting of piles using tremie, Clause 1107 of these Specifications may be referred.

1115.2.6 For very long or large diameter piles, use of retarding plasticizer in concrete is desirable.

1115.2.7 For large diameter piles, it may be essential to conduct non-destructive pile integrity tests to evaluate integrity of the pile.

1115.2.8 Where possible, it may be desirable to grout the base of pile with cement slurry under suitable pressure after concrete in the pile attains the desired strength. For this purpose, conduit pipes with easily removable plugs at the bottom end, should be placed in the bore along with reinforcement cage before concreting.

1116 TOLERANCES

1116.1 Permissible Tolerances for Piles

i) Precast Concrete Piles:

a)	Variation in cross-sectional dimensions	:	± 5 mm
b)	Variation in length	:	± 25 mm
c)	Surface irregularities measured with 3 m straight edge	:	5 mm
d)	Bow for total length of pile in mm		1 mm/m length of pile limited to 20 mm

ii) Driven Piles

a)	Variation in cross-sectional dimensions	:	+50 mm, -10 mm
b)	Variation from vertical for vertical piles	:	1 in 150
c)	For vertical piles deviation at piling platform level	:	75 mm
d)	Variation of level of top of piles	:	± 25 mm

iii) Bored Piles

a)	Variation in cross-sectional dimensions	:	+50 mm, -10 mm
b)	Variation from vertical for vertical piles		1 in 150
c)	For vertical piles deviation at piling platform level	:	75 mm
d)	Variation of level of top of piles	:	± 25 mm

iv) For raker piles from specified rake : 1 in 25

1116.2 Permissible Tolerances for Pile Caps

a)	Variation in dimensions	:	+50 mm, -10 mm
b)	Misplacement from specified position in plan	:	15 mm
c)	Surface irregularities measured	:	5 mm with 3 m straight edge
d)	Variation of level of top of piles	:	± 25 mm

1117 TESTS AND STANDARDS OF ACCEPTANCE

The materials shall be tested in accordance with these Specifications and shall meet the prescribed criteria and requirements.

The work shall conform to these Specifications and shall meet the prescribed standards of acceptance.

1118 MEASUREMENTS FOR PAYMENT

For supply of precast concrete, timber or steel piles of specified cross-section, the measurement shall be in metres of the length of piles ordered in writing by the Engineer measured from the head to the butt of the shoe or the tapered point. Reinforcement in precast concrete piles shall not be measured for payment.

For cast in-situ driven and bored concrete piles of specified cross-section, the measurement shall be the length in metres of the accepted pile that remains in the finished structure complete in place. Reinforcement in cast in-situ driven and bored concrete piles shall be measured for payment as per Section 1600 of these Specifications.

Routine and Initial Pile Load Tests shall not be measured for payment.

For installation of the pile, i.e. by drilling in the case of precast concrete, timber, steel and cast in-situ driven piles, and by boring in the case of cast in-situ bored pile the measurement shall be the length in metres that remains in the finished structure complete in place, limited to that shown on drawings or ordered by the Engineer. No distinction shall be made for penetration through hard strata or rock and socketing into rock.

For steel liners/casing shown on the drawings to be permanently left in place, the measurement shall be by weight in tonnes that remains in the finished structure complete in place, limited to that shown on drawings or ordered by the Engineer.

For the pile cap, the quantity of concrete shall be measured in cubic metres as per Section 1700 of these Specifications and reinforcement in pile cap shall be measured in tonnes as per Section 1600 of these Specifications.

1119 RATE

The contract unit rate for supplying precast concrete, timber or steel piles shall include cost of all labour, materials, tools and equipment, and other work involved in making or fabricating the pile complete as shown on the drawing, and where required its loading, transport, delivery to site, unloading and stacking at the place indicated by the Engineer. The cost of reinforcement including treatment as per Section 1600 of these Specifications in precast

concrete shall be deemed to be included in the quoted rate for supply of piles. The contract unit rate shall also include costs of all labour, materials, equipments and all other incidentals involved in conducting routine and initial pile load tests, including installation of piles for initial load tests.

The contract unit rate for cast in-situ driven and bored piles shall include the cost of concrete and all other items as per Section 1700 of these Specifications. The contract unit rate shall also include costs of all labour, materials, equipments and all other incidentals involved in conducting routine and initial pile load tests, including installation of piles for initial load tests.

The contract unit rate for reinforcement in cast in-situ driven and bored piles shall be as per Section 1600 of these Specifications.

The contract unit rate for installation of piles shall include full compensation for furnishing all labour, materials, tools and equipment, and incidentals for doing all the works involved in driving timber, precast concrete and steel piles, driving or making bores for cast in-situ driven and bored concrete piles, cutting off pile heads, all complete in place to the specified penetration of piles. Providing temporary liner/casing and its withdrawal and placing reinforcement in position shall also be deemed to be included in the rate for installation of piles and no additional payment shall be made for the same.

The contract unit rate for permanent steel liners shall include cost of all labour, fabrication, treatment to the liner and placing the steel liner to the required depth as shown on the drawings and as ordered by the Engineer.

The contract unit rate for concrete in pile cap shall cover all costs of labour, materials, tools, plant and equipment, formwork and staging including placing in position, sampling and testing and all as per Section 1700 of these Specifications . Unit rate quoted shall also include the treatment to be given to the surfaces of the pile cap. Reinforcement in the pile cap shall be paid for separately as per Section 1600 of these Specifications.

1200

WELL FOUNDATIONS

1201 DESCRIPTION

The work shall consist of construction of well foundation, taking it down to the founding level by sinking through all kinds of substrata, plugging the bottom, filling the well with approved material, plugging the top and providing a well cap, in accordance with the details shown on the drawings and as per these specifications, or as directed by the Engineer.

1202 GENERAL

1202.1 Wells may have a circular, rectangular or D-shape in plan and may consist of one, two or more compartments in plan.

1202.2 In case of well foundations of size larger than 12 m diameter, supplemental construction specifications will be necessary.

1202.3 The subsurface geotechnical investigations to be carried out before commencement of work of well foundations shall be in accordance with relevant clauses of **Section 1900** of these Specifications.

1202.4 In case blasting is anticipated for facilitating sinking through difficult strata such as boulders and rock, special protective/strengthening measures for the curb and steining of the well will be required.

1202.5 Pneumatic sinking may have to be resorted to in cases where the well has to be sunk through rock/hard strata or where there are obstacles such as tree trunks, large sized boulders etc., which cannot be removed by open dredging. In such cases, the decision regarding adoption of pneumatic sinking shall be taken on the basis of results of confirmatory bores and as directed by the Engineer.

1203 SETTING OUT AND PREPARATIONS FOR SINKING

1203.1 Necessary reference points shall be accurately fixed to mark x-x axis along the direction of traffic and y-y axis normal to direction of traffic. Such reference points shall be away from the zone of blow-ups or possible settlements which may result from well sinking operations and shall be connected to the permanent stations with the base line on the banks. The centre of the individual wells shall be marked with reference to these stations. The distances between the wells shall be checked with the help of precision instruments.

1203.2 A temporary benchmark shall be established near the well foundation, away from the zone of blow-ups or possible settlement. The bench mark shall be checked regularly with respect to the permanent bench mark established at the bridge site.

1203.3 For wells located on the banks of the river or in dry area, the bed may be

prepared by excavating the soil up to 1.5 m, followed by levelling and dressing before placing the cutting edge.

1203.4 For wells which are to be located in water, a sand island shall be constructed for laying the cutting edge and well curb. Sand islands are practicable for water depths of up to 5 m under stable bed soil conditions. Where the depth of water is greater than 5 m or in fast flowing rivers or for locations where soil is too weak to sustain sand island, floating caissons may have to be adopted.

The plan dimensions of sand islands shall be such as to have a working space of at least 2 m all around the steining of the well. Sand islands shall be maintained to perform their functions, until the well is sunk to a depth below the original bed level at least equal to the depth of water at that location.

The sand island shall be held in position and protected against scour by means of wooden ballies properly braced or sheet piles. The top level of the sand island to be decided by the Engineer, shall be sufficiently above the prevailing water level so that it is not affected by wave action.

1203.5 Equipment shall be deployed for construction of well foundation as required and as directed by the Engineer. Generally, the following equipment may be required for the work:

a) crane with grab buckets – capacity 0.5 cum to 2.0 cum

b) submersible pumps

c) air compressors, air locks and other accessories where pneumatic sinking of well is anticipated

d) chisels of appropriate sizes

e) aqua-header for cutting rocky strata

f) diving helmets and accessories

g) batching plants for concrete production

h) equipment for transportation, placing and compaction of concrete

1204 CUTTING EDGE

1204.1 The cutting edge shall be made from structural steel sections conforming to Section 1900 of these Specifications and shall be strong enough to facilitate sinking of the well through the type of strata expected to be encountered. The weight of the cutting edge shall not be less than 40 kg per metre length. It shall be properly anchored into the well curb as shown on the drawing.

1204.2 When there are two or more compartments in a well, the bottom of the cutting edge of the inner walls shall be kept at about 300 mm above that of outer walls.

1204.3 In V shaped cutting edge, the inclined plate should meet the vertical plate in such a way that full strength connection by welding is feasible.

1204.4 The parts of cutting edge shall be erected on level firm ground about 300 mm above prevalent water level. Temporary supports shall be provided to facilitate fabrication and for maintaining the assembly in true shape. The fabrication may be carried out in the shop or at site. Steel sections shall not be heated and forced into shape. However, "V" cuts may be made in the horizontal portion, uniformly throughout the length, to facilitate cold bending. After bending, such "V" cuts should be closed by welding. Joints in the lengths of structural sections, unless otherwise specified, shall be fillet welded using single cover plate to ensure the requisite strength of the original section.

1205 WELL CURB

1205.1 The well curb shall be such that it will offer minimum resistance while sinking but will be strong enough to be able to transmit superimposed loads from the steining to the bottom plug. The shape and outline dimensions of the curb shall be as shown in IRC:78. The internal angle of the curb shall be about 30° to 37° depending upon geotechnical data of the strata through which the well is to be sunk.

1205.2 The well curb shall be in reinforced concrete having concrete mix in accordance with Table 1700-2 and Table 1700-3 and with minimum reinforcement of 72 kg/cum excluding bond rods. The steel shall be suitably detailed to prevent spreading and splitting of curb during sinking. The outer face of the curb shall be vertical. The bottom ends of vertical bond rods of steining shall be fixed securely to the cutting edge with check nuts or by welds. Concreting of the well curb shall be done in one continuous operation.

1205.3 Steel formwork for well curb shall be fabricated strictly in conformity with the drawing. The formwork on outer face of curb may be removed within 24 hours after concreting while that on inner face shall be removed only after 72 hours.

1205.4 In case blasting is anticipated, the inner face of the well curb shall be protected with steel plates of thickness not less than 10 mm up to the top of the well curb. If considered necessary, the inner face of steining may also be protected with steel plates of 6 mm thickness up to a height of 3 m above the top of the well curb or as specified by the Engineer. The curb as well as 3 m height of steining above the curb, shall be provided with additional hoop reinforcement of 10 mm diameter bars at 150 mm spacing. Additional hoop reinforcement shall be provided in the steining for a further height of up to two times the thickness of steining above the plates, so as to avoid cracking which may arise on account of sudden change in the effective section due to curtailment of plate.

1206 FLOATING CAISSONS

1206.1 Floating caissons are generally fabricated at or near the banks on dry land or in dry docks and then towed into position. For floating caissons, a detailed method statement covering fabrication, floating and sinking operations, shall be prepared and furnished to the Engineer. Such statement shall include the total tonnage of steel involved, fabrication and welding specifications, list of materials and plant and a description of operations and manpower required for the work.

1206.2 Floating caissons shall be of structural steel conforming to Section 1900 of these Specifications. The joints of the fabricated structure shall be absolutely leak-tight and shall be checked against leakage before floating and being towed to site. The reinforcement of the curb and steining of the well shall be fixed inside the shell by welding before the caisson is floated. Stability of floating caissons shall be ensured against overturning and capsizing under the action of water current, wave pressure and wind while being towed and kept in position. To maintain the stability of the shell while being floated, it may be provided with ballast in the form of water filling up to required level or filling with small amount of concrete. It shall be ensured that the draught of the floating caisson is always less than the depth of water available, so as to facilitate its smooth hindrance-free movement while being towed.

1206.3 Height of caisson shall be planned to ensure that at any given time, at least one metre of the shell shall be above water level. In case the location is affected by the action of waves, the height shall be suitably increased to avoid water spilling into the caisson. In case the bed has soft soil, the caisson shall be provided with 3 to 5 metres of additional height, as it may sink by itself after grounding in bed. Simultaneous sinking and concreting is required to prevent caisson from tilting. In sandy stratum especially with strong water current, appropriate additional height of caisson is necessary for accommodating local scour.

1206.4 The floating caisson shall be held in position against untoward movement by wire ropes/chains, using winches mounted on stationary suitable platforms/buoys or similar anchoring systems. Anchoring in minimum three directions, shall be provided to prevent unacceptable longitudinal and lateral movement. The anchoring system shall permit small movements in order to facilitate correct positioning of the caisson at the exact location of the well and until the stage when it is just getting grounded. Special care is necessary where variation in water level is frequent, e.g. in tidal zones.

1206.5 After being held in correct position, concreting of the floating caisson shall be commenced. The concrete mixed in batching plants, shall be carried to the floating caisson on barges and placed in position through concrete pumps or tremie. When large volumes of concreting are involved, the batching plant concrete pump, crane etc, may all be mounted on a barge kept in the vicinity of the caisson. As no vibration is possible inside the shell, it shall be ensured that the concrete has a slump of 150 to 200; alternatively, self-compacting concrete can be used. The concrete shall be carefully placed uniformly all around the caisson so that it settles vertically without any tendency to tilt.

1207 WELL STEINING

1207.1 The dimensions, shape, concrete strength and reinforcements of the well steining shall strictly conform to those shown on the drawings. The formwork shall preferably be of M.S. sheets shaped and stiffened suitably. In case timber forms are used, they shall be lined with plywood or M.S. sheets.

1207.2 The height of the first lift of steining to be cast above the well curb shall not be more than 2 m and subsequent lifts shall not exceed the diameter of the well or the depth of well to be sunk below the bed level at any time. For stability, the first lift of steining shall be cast only after sinking the curb at least partially. Concreting of steining may be carried out in subsequent lifts of about 2 to 2.5 m. Attempts should be made to minimize the number of construction joints. The concreting layers shall be limited to 450 mm restricting the free fall of concrete to not more than 1.5 m. Laitance formed at the top surface of a lift shall be removed to expose coarse aggregates before setting of concrete at the proposed construction joint. As far as possible, construction joints shall not be kept at the location of laps in the vertical steining bars.

1207.3 The steining of the well shall be built in one straight line from bottom to top such that if the well is titled, the next lift of steining will be aligned in the direction of the tilt. The work will be checked carefully with the aid of straight edges of lengths approved by the Engineer. Plumb bob or spirit level shall not be used for alignment. After sinking of a stage is complete, damaged portions if any, of steining at top of the previous stage shall be properly repaired before constructing the next stage.

1207.4 For measuring the height of steining, it shall be marked with at least 4 gauges, two in traffic direction and two normal to traffic direction, distributed equally on the outer face of the well. The marking shall be in the form of a 100 mm wide strip painted on the steining, with every metre marked in black paint. Marking of the gauges shall be done carefully and accurately with a steel tape, starting with zero at the bottom of the cutting edge. The marking shall be continued upwards as each lift of steining is added.

1207.5 After reaching the founding level, the well steining shall be inspected to check for any damage or cracks. The Engineer will direct and the Contractor shall execute the remedial measures, if required, before acceptance of the well steining. In case the well is found to be unacceptable even after remedial measures are carried out, then it shall stand rejected.

1208 WELL SINKING

1208.1 General

The well shall be sunk true and vertical through all types of strata. No well shall be permitted to be placed in a pre-dredged hole.

Sinking or loading of the well with kentledge shall be commenced only after the steining has been cured for at least 48 hours or as specified in the drawings.

The well shall be sunk by excavating the material uniformly from inside the dredge hole using cranes with grab buckets of appropriate capacity. Use of water jetting, explosives and divers may be adopted for sinking of wells through difficult strata, with prior approval of the Engineer. Well sinking can also be carried out by jack down method.

Normally dewatering of well should not be permitted as a means for sinking the well. It shall never be resorted to if there is any danger of sand blowing under the well. Dewatering shall however be done when well is to be founded in rock. Pneumatic sinking may have to be resorted to where obstacles such as tree trunks, large sized boulders etc. are met or when there is hard strata which cannot be removed by open dredging. The necessity for adopting pneumatic sinking shall be decided by the Engineer.

Complete history of sinking of each well giving details of concreting, sinking and problems met, if any, shall be maintained in the format given in Appendix 1200/I.

1208.2 Sand Blows in Wells

Dewatering of the well shall not be carried out if sand blows are expected. Any equipment or men working inside the well, shall be brought outside the well as soon as there are any indications of sand blow occurring. Sand blow can often be minimized by keeping the level of water inside the well higher than the water table and also by adding heavy kentledge.

1208.3 Use of Kentledge for Sinking of Well

Kentledge shall be placed in an orderly and safe manner on the loading platform and in such a way that it does not interfere with the excavation of the material from inside the dredge hole and also does not in any way damage the steining of the well.

Where tilt has occurred or there is a danger of well developing a tilt, the position of the load shall be regulated in such a manner as to provide greater sinking effort on the higher side of the well.

1208.4 Use of Water Jetting

Water jetting can be used to facilitate sinking of wells through clay/hard strata. The decision regarding use of water jetting shall be taken at the design stage itself, based on geotechnical investigations which may be indicating presence of hard, clayey strata. For carrying out water jetting, the required number of steel pipes of 40 to 50 mm diameter shall be embedded in the steining of the well, spaced evenly around its periphery. The bottom of the steel pipe shall taper down to a nozzle exiting in the sloping face of the well curb. The diameter of the nozzle

shall be 6 mm. The steel pipe shall be kept about 1m above the top of each lift of steining, so that it can be extended by means of suitable couplers before the next lift of steining is cast. When the well reaches the hard strata and the need for water jetting arises, the tops of the embedded pipes shall be connected to pumps of required capacity for pumping in water at high pressure. The water jet issuing from the nozzle of the pipe under high pressure, cuts through the hard material and loosens it, permitting the well to sink at a faster rate than would otherwise have been possible. When water jetting is to be adopted, the Contractor shall furnish a method statement for approval of the Engineer covering all aspects of the work including the number, capacity and location of the high pressure pumps and other ancillaries required for executing the work.

1208.5 Use of Jack Down Method

The jack down method of sinking shall be adopted as per requirement or as directed by the Engineer. The first step shall be to install ground anchors outside the periphery of the well. The number, location and depth of ground anchors are decided based on the properties of the surrounding soil to develop the necessary resisting force through skin friction. The drill holes of about 150 mm diameter along with casings shall be taken down to a depth of about 20 m or more below the founding level of the well, depending on requirements of design. After the holes have been drilled to the required depth, prestressing strands of adequate diameter and capacity are cut to the desired length and lowered into the holes. The holes shall then be grouted with cement slurry with non-shrink additive. Once the grouting is completed till the ground level, the casing is removed. The removal of the casing shall be done before the grout sets. In case rock is met with, the anchors shall be socketed into rock.

Heavy duty pressurization girders fabricated of steel, shall be placed over stools resting on the steining of the well, against which the hydraulic jacks connected to the ground anchors, can exert pressure to push the well down. The hydraulic jacks shall be of capacity 500 T or more as per requirement. Before applying pressure from the jacks, 1 m deep sump is created inside the well by dredging. Pressure on different jacks is exerted in such a manner as to neutralize any tendency of the well to tilt. With the use of the jacks and controlled dredging, high rates of sinking can be achieved and the chances of sand blowing can also be reduced.

For use of jack down method of sinking, the Contractor shall furnish a method statement for approval of the Engineer, giving full details of construction of ground anchors, fabrication of pressurizing girder, type, number and capacity of jacks to be used, method of dredging and application of jack down force and all other relevant aspects for proper execution of the work.

1208.6 Use of Explosives

Mild explosive charges may be used as an aid for sinking of the well. All prevalent laws

concerning handling, storing and using of explosives shall be strictly followed. All safety precautions shall be taken as per IS:4081 "Safety Code for Blasting and related Drilling Operations", to the extent applicable, whenever blasting is resorted to.

When the likelihood of resorting to blasting is predicted in advance, protection of the bottom portion of the well shall be done as per Clause 1205.4.

Blasting of any sort shall be done only with prior permission and in the presence of the Engineer. Blasting shall not be done before the concrete in the steining has hardened sufficiently and is more than 7 days old.

After blasting operations are completed, the well curb and steining should be examined for any cracks and remedial measures taken if required.

If blasting has been done after the well has reached the design foundation level, normally 24 hours shall be allowed to lapse before the bottom plug is laid.

The charges shall be exploded well below the cutting edge by making a sump so as to avoid chances of any damage to the curb or to the steining of the well. A minimum sump of 1 m depth should be made before resorting to blasting. Use of large charges, 0.7 kg or above, may not be allowed, except under expert direction and with the permission of the Engineer. The pattern of charges may be suitably arranged with delay detonators so as to reduce the number of charges fired at a time. The burden of the charge may be limited to 1 m and the spacing of holes may normally be kept as 0.5 m to 0.6 m.

There should be no equipment inside the well nor shall there be any worker in the close vicinity of the well at the time of exploding the charges.

If rock blasting is to be done for seating of the well, the damage caused by flying debris should be minimised by covering blasting holes with rubber mats before detonating the charge.

1208.7 Use of Divers

Divers may be used for removal of obstructions during sinking, carrying out rock blasting and for inspection. All safety precautions shall be taken as per any acceptable safety code or any statutory regulations in force, when divers carry out work under water in the well.

Only persons trained in diving operations shall be employed after being certified fit for diving by an approved doctor. They shall work under expert supervision. The raising of the diver from the bottom of wells shall be controlled so that decompression rate conforms to the rate as laid down in relevant regulations.

The diving and other equipment shall be of acceptable standard and certified to this effect by an approved independent agency. They shall be well maintained as per requirements for safe use.

Arrangement for ample supply of low pressure clean cool air shall be ensured through an armoured flexible hose pipe. Standby compressor shall be provided to cover the contingency of breakdown of the compressor.

Separate high pressure connection shall be made for use of pneumatic tools. Electric lights where provided shall be at 50 volts (maximum).

1208.8 Use of Pneumatic Sinking

1208.8.1 General

The Engineer shall familiarize himself with particular reference to 'caisson diseases' and working of the medical air-lock. A doctor competent to deal with cases of 'caisson diseases' or other complications arising as a result of working under high pressure, shall be stationed at the construction site when pneumatic sinking is under progress.

The Contractor shall provide complete facilities and ensure strict enforcement of the requirements outlined in these specifications.

Safely provisions as contained in IS:4138 and in these specifications shall be strictly followed.

Pneumatic sinking shall be limited to a depth of 30 m below ground level.

1208.8.2 Man Locks and Shafts

Locks, reducers, and shaft used in connection with caissons shall be of riveted construction throughout. The material used in their manufacture shall be steel plate with thickness not less than 6 mm.

Shafts shall be subjected to hydrostatic or air pressure test so as to ensure leak-tightness at a pressure of at least 0.5 MPa. The pressure at which testing has been done shall be clearly and visibly displayed.

The shaft shall be provided with safe, proper and suitable staircase for its entire length including landing platforms which shall be not more than 6 m apart. Where this is impracticable due to space constraints, suitable ladders along with landing platforms shall be installed. These shall be kept clear and in good condition at all times and shall be constructed, inspected and maintained to the entire satisfaction of the Engineer.

A 1 m wide platform with 1 m high railing shall be provided all round the caisson air locks.

Where 15 or more men are employed, caissons shall have two locks, one of which shall be used as a man-lock.

Locks shall be located so that the lowest part of the bottom door shall not be less than 1 m above the highest water level in the well.

The supply of fresh air to the working chamber shall at all times be sufficient to permit work to be done without any danger or excessive discomfort. All air supply lines shall be fitted with check valves.

A man lock shall be used solely for the compression or decompression of workers and not for the passage of plant and material and shall be maintained in a reasonably clean and sufficiently warm state. However, any hand tool or hand instruments used for the purpose of the work may be carried into the man lock.

Where it is not reasonably practicable to provide a separate man lock for use by workers only, the lock when it is in actual use for compression or decompression of a person, shall be in a reasonably clean and sufficiently warm state and shall not be put simultaneously to any other use.

1208.8.3 Valves

Exhaust valves shall be provided, having risers extending to the upper part of the chamber. These shall be operated, whenever necessary specially after a blast. Precautions shall be taken that men are not allowed to resume work after a blast, until the gas and smoke have cleared.

1208.8.4 Medical Supervision and Certification

Every employee absent from work for 10 or more consecutive days due to illness or any other disability, shall be required to pass the regular physical examination by the doctor before being permitted to return to work.

After a person has been employed continuously in compressed air for a period of 2 months, he shall be re-examined by the doctor and shall not be permitted to work until such re-examination has been made and the report is satisfactory.

No person known to be addicted to the excessive use of intoxicants shall be permitted to work in compressed air.

The doctor shall, at all times, keep a complete and full record of examination made by him, which shall contain dates of examinations, a clear and full description of the persons examined, his age and physical condition at the time of examination and a statement as to the period for which he has been engaged in such work. Records shall be kept at the place where the work is in progress and shall be subject to inspection by authorized officers.

Every man lock shall always have a doctor or a responsible person in attendance. In case the person in charge is not a doctor, he must have positive means of promptly communicating with and securing the services of a competent doctor in case of emergency. Such arrangements shall invariably be subject to the approval of the Engineer.

All cases of compressed-air illness shall be reported and copies of all such reports shall be kept in file at the place of work.

1208.8.5 Lighting

All lighting in compressed air chambers shall be operated only by electricity. Two independent electric lighting systems with independent sources of supply shall be used. These shall be so arranged that the emergency source shall become automatically operative in case of failure of the regularly used source.

The minimum intensity of light on any walkway ladder, stairway, or lower working level shall be one-quarter (1/4) candlepower. In all work places, the lighting shall always be such as to enable workmen to see their way about clearly. All external parts of lighting fixtures and electrical equipment lying within 2.5 m above the floor shall be constructed of non-combustible, non-absorbing insulating materials. If metal is used, it must be effectively earthed. Portable lamp shall have non-combustible, non-absorbing insulating sockets, approved handles, basket guards and approved cables. The use of worn out or defective portable and pendant conductors is prohibited.

1208.8.6 Safety Against Fire Hazard

No oil, gasoline, or other combustible material shall be stored within 30 m of any shaft, caisson or tunnel opening. It shall be positively ensured that leaking flammable liquids do not flow into such areas. Oil may be stored in suitable tanks in isolated fireproof buildings, which are not less than 15 m away from any shaft, caisson, or tunnel opening or any building directly connected thereto.

Where feasible, a fire hose connected to a suitable source of water shall be provided at the top of every caisson. Where fire mains are not accessible, water shall be stored in tanks near the top of every caisson, provided fire pails or suitable pumps are kept available. Approved fire extinguishers shall also be provided.

1208.8.7 Sanitation

Properly heated, lighted and ventilated dressing rooms shall be provided for all employees engaged in compressed air work. Such rooms shall contain lockers and benches and be open and accessible to person during intermissions between shifts. Adequate toilet accommodation of one for every twenty five employees shall be provided.

Care shall be taken to keep all parts of the caissons and other working compartments, including locker rooms, dry rooms, rest rooms and other equipment in good sanitary condition and free from refuse, decaying or other objectionable matter.

Smoking shall be strictly prohibited and matches and smoking materials shall not be allowed to be brought into the locker rooms.

A separate dry room shall be provided where working clothes may be dried in a reasonable time.

1208.8.8 Protection Against Gases

In all cases where release of gas is expected as in the case of sinking through alluvium impregnated with decayed vegetable matter, the use of Davy Safety Lamp shall be compulsory.

1208.8.9 Additional Safety Provisions

a) The weight of the pneumatic platform and that of steining and kentlege, if any, shall be sufficient to resist the uplift from air inside, skin friction being neglected in this case. If at any section, the total weight acting downwards is less than the uplift pressure of air inside, additional kentledge shall be placed on the well.

   If it is not possible to make the well heavy enough during excavation, "blowing down" may be used. The men should be withdrawn and air pressure reduced. The well should then begin to move with small reduction in air pressure. "Blowing down" should only be used when the ground is such that it will not heave up inside the chamber when the pressure is reduced. When the well does not move with the reduction in air pressure, kentledge should be added. "Blowing down" should be in short stages and the drop should not exceed, 0.5 m at any stage. To control sinking during blowing down, use of packing is recommended.

b) The pneumatic sinking plant and other allied machinery shall not only be of proper design and make, but also shall be operated by competent and well trained personnel. Every part of the machinery and its fixtures shall be minutely examined before installation and use. Availability of appropriate spares, standbys, safety of personnel as recommended in IS:4138 for working in compressed air must be ensured at site. Codes for safety and for working in compressed air and other labour laws and practices prevalent in the country, as specified to provide safe, efficient and expeditious sinking shall be followed.

c) Inflammable materials shall not be taken into air locks and smoking shall be prohibited. Wherever gases are suspected to be issuing out of dredge hole, the same shall be analysed by trained personnel and necessary precautions adopted to avoid hazard to life and equipment.

d) Where blasting is resorted to, it shall be carefully controlled and all required precautions shall be observed. Workers shall be allowed inside after blasting only when a competent and qualified person has examined the chamber and steining thoroughly and found the same to be safe.

1208.9 Precautions During Sinking

a) When wells have to be sunk close to each other and clear distance between them is less than the diameter of wells, sinking shall be taken up on all wells and they shall be sunk alternately so that the sinking proceeds uniformly. Simultaneous and even dredging shall be carried out in the wells in such a manner that the difference in the levels of the sump and cutting edge in the adjacent wells does not exceed half the clear gap between them. Plugging of all the wells shall be done together.

b) During sinking of double D-shaped wells, the excavation in both the dredge holes should be carried out simultaneously and equally.

c) Bore chart shall be referred to constantly during sinking for taking adequate care while piercing different types of strata. The type of soil as obtained during the well sinking should be compared with bore chart so as to take prompt decisions.

d) Before seasonal floods, all wells on which sinking is in progress shall be sunk to sufficient depths below the designed scour level. Further, they shall be temporarily filled and plugged so that they do not suffer any tilt or shift during the floods.

e) All necessary precautions shall be taken against any possible damage to the foundations of existing structures in the vicinity of the wells, prior to commencement of dredging from inside the well.

f) The dredged material shall not be allowed to accumulate around the well. It shall be dumped and spread, as far away as possible, and then continuously and simultaneously removed, as directed by the Engineer. In case the river stream flows along one edge of the well being sunk, the dredged material shall not be dumped on the dry side of the bank but on the side on which the river current flows.

g) Very deep sump shall not be made below the well curb, as it entails risk of jumping (sudden sinking) of the well. The depth of sump shall

be generally limited to one-sixth of the outer diameter/least lateral dimension of the well in plan. Normally the depth of sump shall not exceed 3.0 m below the level of the cutting edge unless otherwise specially permitted by the Engineer.

h) In case a well sinks suddenly with a jerk, the steining of the well shall be examined to the satisfaction of the Engineer to see that no damage has occurred to it.

i) In pneumatic sinking, the well shall not, at any time, be dropped to a depth greater than 500 mm by the method of "blowing down".

j) Dewatering shall be avoided if sand blows are expected. Any equipment and men working inside the well shall be brought out of the well as soon as there are any indications of a sand-blow.

k) Sand blowing in wells can often be minimized by keeping the level of water inside the well higher than the water table and also by adding heavy kentledge.

l) In soft strata prone to settlement/creep, the construction of the abutment wells shall be taken up only after the approach embankment for a sufficient distance near the abutment, has been completed.

1208.10 Tilts and Shifts

Unless otherwise specified, the tilt of any well i.e. its inclination from the vertical, shall not exceed 1 (horizontal) in 80 (vertical). The shift of the well i.e. the horizontal displacement of the centre of the well at the founding level from its theoretical position, shall not be more than 150 mm in any resultant direction.

Tilts and shifts shall be carefully checked and recorded regularly during sinking operations in the format given in Appendix 1200/II. For the purpose of measuring the tilts along the two axes of the bridge, reduced level of the marks painted on the surface of the steining of the well shall be taken. For determination of shift, locations of the ends of the two diameters shall be precisely measured along the two axes, with reference to fixed reference points.

Whenever any tilt is noticed, adequate corrective measures like placing eccentric kentledge, pulling, strutting, anchoring or depositing more dredged material outside the tilted face, water/air jetting, shall be adopted before any further sinking. After correction, the dredged material shall be removed and disposed of sufficiently away from the affected well. In case of sinking by jack down method tilt can be controlled by suitably adjusting jack down pressure on one side.

A pair of wells close to each other have a tendency to come closer while sinking. Timber struts may be introduced in between the steining of these wells to prevent such movement.

Tilts occurring in a well during sinking in dipping rocky strata can be controlled by suitably supporting the curb.

In the event of a well developing tilt or shift beyond the specified permissible values, the Contractor shall have to carry out, at his own cost, suitable remedial measures to the satisfaction of the Engineer, to bring the tilt and shift within permissible values.

If the resultant tilt and shift of any well exceeds 1 in 80 or 150 mm respectively the well so sunk shall be regarded as not conforming to specification and classified as substandard work. The Engineer in his sole discretion, may consider accepting such a well, provided:

i) Calculations for foundation pressures and steining stresses, accounting for the actual tilt and shift furnished by the Contractor show that the well is safe. remedial measures required to bring the stresses within permissible values (such as increase in the dimension of the well cap, provision of dummy weights on the well cap etc.), shall be carried out by the Contractor at his own cost.

ii) The Contractor shall be subjected to reduction in rates as a penalty in accordance with Clause 1215(g).

In case the Engineer, in his discretion, rejects the well, the Contractor shall dismantle the rejected well to the extent directed by the Engineer and remove the debris. Further, the Contractor shall at his own risk and cost, complete the bridge with modified span arrangement acceptable to the Engineer.

1208.11 Seating of Wells

The well shall be uniformly seated on the founding strata. It shall be ensured by test borings that the properties of the soil encountered at the founding level and up to a depth of one and a half times the well diameter, is identical to that adopted in the design. The procedure for test boring shall be in accordance with the provisions of these Specifications. In case the soil encountered is inferior to that adopted in design, the well shall be re-designed by the Engineer adopting the soil properties actually encountered and the founding level intimated to the Contractor, who shall carry out the work accordingly.

In case of seating of wells in hard rocky strata, where the rock profile is steeply sloping, pneumatic methods of sinking may be adopted to seat the well evenly as directed by the Engineer. The decision of adopting pneumatic sinking shall be taken by the Engineer. The cutting edge may also be embedded for a suitable depth in the rocky strata, as decided by the Engineer keeping in view the quality of rock. A sump of depth 300 mm in hard rock or 600 mm in ordinary rock shall be made inside the well by chiselling or blasting as approved by Engineer. Diameter of sump shall be 1.5 m to 2 m less than that of the dredge hole. After

the well has been evenly seated on good hard rock, arrangements shall be made to facilitate proper inspection in dry and visible conditions before the bottom plug is laid.

1209 BOTTOM PLUG

A bottom plug of concrete shall be provided in all wells, the top level of which shall be kept a minimum of 300 mm above the top of the curb, as shown in IRC:78. A suitable sump shall be made below the level of the cutting edge. Before concreting the bottom plug, it shall be ensured that the inside faces of curb and steining have been cleaned thoroughly.

The concrete mix used in bottom plug shall have a minimum cement content of 330 kg per cu.m with a slump about 150 mm, to permit easy flow of concrete through tremie to fill up all cavities. Concrete shall be laid in one continuous operation till the dredge hole is filled to the required height. For under water concreting, the concrete shall be placed by tremie under still water condition and the minimum cement content shall not be less than 330 kg/m^3 inclusive of all mineral admixtures, if added.

In case of grouted concrete, the grout mix shall not be leaner than 1:2. It shall be ensured that the grout fills up all interstices upto the top of the bottom plug by suitable means such as, controlling the rate of pumping etc.

Any dewatering required, shall only be done 7 days after casting of bottom plug.

The concrete production and placement equipment should be sufficient to enable under water concreting within stipulated time. Necessary standby equipment should be available for emergency situation.

Before commencing plugging, all loose material from the bottom of the well shall be removed. Concreting shall be done in one continuous operation till the dredge hole is filled up to the required height and thereafter soundings shall be taken to ensure that the concrete has been laid to the required height. Least disturbance shall be caused to the water inside the well while laying concrete in the bottom plug. The concrete after placing, shall not be disturbed in any way for at least 7 days.

In order to check whether there is any rise in the level of the bottom plug, soundings should be taken at the close of concreting and once every day for the next 3 days.

The soundness of the bottom plug may be tested by dewatering the well to a level 5 m below the surrounding water level and checking the rise of water. For foundation subjected to artesian pressure, the depth of dewatering by 5 m shall be measured form the still water level created inside the well by the construction of false steining. The rate of rise shall preferably be less than 10 cm per hour. In case the rate is higher, suitable remedial measures as directed by the Engineer, shall be taken by the Contractor at his own cost.

1210 SAND FILLING

Sand filling shall commence 7 days after laying of bottom plug. The level of the top of the bottom plug shall be verified before starting sand filling.

The sand shall be clean and free from earth, clay clods, roots, boulders, shingles, etc. and shall be compacted as directed. Sand filling shall be carried out up to the level shown on the drawing or as directed by the Engineer.

1211 TOP PLUG

After filling sand up to the required level, a top plug of 300 mm thick concrete of grade M 15, shall be provided over it as shown on the drawing or as directed by the Engineer.

1212 WELL CAP

A reinforced cement concrete well cap will be provided over the top of the steining in accordance with the drawing. Formwork will be prepared conforming to the shape of well cap. In case sand filling has been carried out up to the top of the well, the concrete of the well cap may be laid directly on it after it has been suitably levelled. Otherwise, suitable shuttering supported on the inside of the steining, shall be provided for carrying the weight of the green concrete of the well cap.

Concreting shall be carried out in dry condition. A properly designed false steining may be provided where required, to ensure that the well cap is laid in dry condition.

The bottom of the well cap shall be laid preferably as low as possible but above the LWL in the active channel. Where the bed level is higher than the LWL, the top of the well cap may be suitably raised and kept 1m below existing ground level.

Bond rods of steining shall be anchored into the well cap.

1213 TOLERANCES

The permissible tilt and shift shall not exceed 1 (horizontal) in 80 (vertical) and the shift at the well base shall not be more than 150 mm in any resultant direction.

For the well steining and well cap, the permissible tolerances shall be as follows:

a) Variation in dimension : +50 mm, -10 mm

b)	Misplacement from specified position in plan	:	15 mm
c)	Surface unevenness measured with 3 m straight edge	:	5 mm
d)	Variation of level at the top	:	± 25 mm

1214 TESTS AND STANDARDS OF ACCEPTANCE

The materials shall be tested in accordance with these Specifications and shall meet the prescribed criteria.

The work shall conform to these Specifications and shall meet the prescribed standards of acceptance.

1215 MEASUREMENTS FOR PAYMENT

All quantities shall be measured from the drawing, or as ordered by the Engineer, excepting those required to be provided by the Contractor at his cost.

a) The structural steel in cutting edge shall be measured in tonnes based on the net weight of metal used in it, as per Section 1900 of these Specifications.

b) The concrete in curb, well steining and well cap shall be measured in cubic metres in each of the items as per Section 1700 of these Specifications.

c) The steel reinforcement shall be measured in tonnes separately in each of the items, as per Section 1600 of these Specifications.

d) The measurement for well sinking shall be made in running metres for different depths and in different types of strata (e.g. predominantly sand/clay soil, ordinary rock, hard rock etc.) as specified in the contract. The depth of sinking shall be measured from the level specified in the contract. If no level has been specified in the Contract, sinking shall be measured from the low water level or from the level at which the cutting edge was laid, whichever is higher.

e) The quantity of concrete in bottom and top plug shall be measured in cubic metres as per Section 1700 of these Specifications.

f) The quantity of sand filling shall be measured in cubic metres.

g) Pneumatic sinking, where required, shall be paid as a separate item and shall be measured in cubic metres of material to be excavated.

1216 RATE

a) The contract unit rates of structural steel in cutting edge shall cover all costs of labour, material, tools, plant and equipment, including placing in position, sampling and testing, and, supervision, all as per Section 1900 of these Specifications.

b) The contract unit rates for concrete in curb, steining, bottom plug, top plug and well cap, shall cover all costs of labour, material, tools, plant and equipment, formwork and staging including placing in position, sampling and testing, and, supervision, all as per Section 1700 of these Specifications and as described in this Section.

c) The contract unit rates for reinforcement in curb, steining, and well cap, shall cover all costs of labour, material, tools, plant and equipment, including bending to shape, placing in position, sampling, testing and supervision, all as per respective Section 1600 of these Specifications and as described in this Section.

d) The contract unit rates for sand filling shall cover all costs of labour, material, tools, plant and equipment, including placing in position and supervision.

e) The contract unit rates for sinking of well shall cover the costs of labour, tools, and equipment and plant and for all operations and other incidentals for sinking of well including seating except pneumatic sinking as described in this Section. The unit rates shall specify the strata such as types of soil, rock, etc. The rate shall cover all testing and supervision required for the work.

f) The contract unit rate of material to be excavated by pneumatic sinking shall cover all costs of labour, material, tools, plant and other equipment and other incidentals and safety provisions and supervision required for pneumatic sinking as per this Section.

g) Reduction in contract unit rates for sinking as a penalty, as required under Clause 1208.10.

If any well with tilt and/or shift exceeding the permissible values is accepted by the Engineer, the Contractor shall be subjected to a reduction in the rates for the sinking of well as follows:

S. No.	Amount of Tilt and/or Shift	Percent Reduction on the Rate (s) for Sinking of Whole Well
1)	Tilt exceeding the specified permissible value but equal to or within 1 in 60	5 percent
2)	Tilt exceeding 1 in 60 but equal to or within 1 in 50	10 percent
3)	Tilt exceeding 1 in 50	20 percent
4)	Shift exceeding the specified permissible value but equal to or within 200 mm	2 percent
5)	Shift exceeding 200 mm but equal to or within 300 mm	5 percent
6)	Shift exceeding 300 mm	10 percent

For excessive tilt and shift, the reduction in rates shall be decided separately by the Engineer.

1300

BRICK MASONRY

1301 DESCRIPTION

This work shall consist of construction of structures with bricks jointed together by cement mortar, in accordance with the details shown on the drawings or as approved by the Engineer.

1302 MATERIALS

All materials to be used in the work shall conform to the requirements laid down in **Section 1000** of these specifications.

1303 PERSONNEL

Construction of brick work shall be carried out only by masons having sufficient experience/ training in the work.

1304 CEMENT MORTAR

1304.1 Proportioning and Mixing of Mortar

Cement and sand shall be mixed in specified proportions given on the drawings. Cement shall be proportioned by weight, taking the unit weight of cement as 1.44 tonne per cubic metre. Sand shall be proportioned by volume with due allowance for bulking. All mortar shall be mixed with a minimum quantity of water to produce desired workability consistent with required density. The mix shall be clean and free from soil, acid, alkali, organic matter or other deleterious substances.

The mixing shall be done in a mechanical mixer operated manually or by power. As an exception, hand mixing can also be resorted to as long as uniform density of the mix and its strength are assured. Hand mixing shall be permitted only for very small and isolated works like CD works, subject to the prior approval of the Engineer. Hand mixing shall be carried out on a clean watertight platform, where cement and sand shall be first mixed dry in the required proportion by being turned over and over, backwards and forwards, several times till the mixture is of uniform colour. Thereafter, minimum quantity of water shall be added to bring the mortar to the consistency of a stiff paste. The mortar shall be mixed for at least two minutes after addition of water.

Mortar shall be mixed only in such quantity as required for immediate use. The mix which has developed initial set shall not be used. Initial set of mortar with ordinary Portland Cement shall normally be considered to have taken place in 30 minutes after mixing. In case the mortar has stiffened during initial setting time because of evaporation of water, it can be re-tempered by adding water as frequently as needed to restore the requisite consistency, but such re-tempering shall not be permitted 30 minutes after mixing. Mortar remaining unused for more than 30 minutes after mixing, shall be rejected and removed from site of work.

1304.2 Testing of Mortar

Necessary tests to determine compressive strength of the mortar, its consistency and water resistivity shall be carried out in accordance with IS:2250. For compressive strength tests, the frequency of testing shall be 1 cube for every 2 cu.m of mortar, subject to a minimum of 3 cubes for a day's work.

1305 SOAKING OF BRICKS

All bricks shall be thoroughly soaked in a tank filled with water for a minimum period of one hour prior to being laid. Soaked bricks shall be removed from the tank sufficiently in advance so that they are skin dry at the time of actual laying. Such soaked bricks shall be stacked at a clean place where they are not contaminated with dirt, earth, etc.

1306 JOINTS

The thickness of joints shall not exceed 10 mm. All joints on exposed faces shall be tooled to give concave finish.

1307 LAYING

All brickwork shall be laid in an English bond, even and true to line, plumb and level and all joints accurately kept in accordance with the drawing or as directed by the Engineer. Half and cut bricks shall not be used except when necessary to complete the bond. Closer in such cases shall be cut to the required size and used near the ends of the walls. The bricks used at the face and also at all angles forming the junction of any two walls shall be selected whole bricks of uniform size, with true and rectangular faces.

All bricks shall be laid with frogs up on a full bed of mortar except in the case of tile bricks. Each brick shall be properly bedded and set in position by slightly pressing while laying, so that the mortar gets into all its surface pores to ensure proper adhesion. All head and side joints shall be completely filled by applying sufficient mortar to brick already placed and on brick to be placed. All joints shall be properly flushed and packed with mortar so that no hollow spaces are left. No bats or cut bricks shall be used except to obtain dimensions of the different courses for specified bonds or wherever a desired shape so requires.

The brick work shall be built in uniform layers and for this purpose, wooden straight edge with graduations indicating thickness of each course including joint shall be used. Corners and other advanced work shall be raked back. Brickwork shall be done true to plumb or in specified batter. All courses shall be laid truly horizontal, and vertical joints shall be truly vertical. Vertical joints in alternate courses shall come directly one over the other. During construction, no part of work shall rise more than one metre above the general construction level, to avoid unequal settlement and improper jointing. Where this is not possible, the work shall be raked back according to the bond (and not toothed) at an angle not steeper than 45 degree with prior approval of the Engineer. Toothing may also be permitted where future extension is contemplated.

Before laying bricks in foundation, the foundation slab shall be thoroughly hacked, swept clean and wetted. A layer of mortar not less than 12 mm thick shall be spread on the surface of the foundation slab before the first course of bricks is laid.

1308 JOINTING OLD AND NEW WORK

Where fresh masonry is to join with masonry that is partially/entirely set, the exposed jointing surface of the set masonry shall be cleaned, roughened and wetted, so as to achieve the best possible bond with the new work. All loose bricks and mortar or other material shall be removed.

In the case of vertical or inclined joints, it shall be further ensured that proper bond between the old and new masonry is obtained by interlocking the bricks. Any portion of the brickwork that has been completed, shall remain undisturbed until thoroughly set.

In case of sharp corners specially in skew bridges, a flat cutback of 100 mm shall be provided so as to have proper and bonded laying of bricks.

1309 CURING

Green work shall be protected from rain by suitable covering and shall be kept constantly moist on all faces for a minimum period of seven days. Brick work carried out during the day shall be suitably marked indicating the date on which the work was done, so as to keep a watch on the curing period. The top of the masonry work shall be left flooded with water at the close of the day. Watering shall be done carefully so as not to disturb or wash out the green mortar.

During hot weather, all finished or partly completed work shall be covered or wetted in such a manner as to prevent rapid drying of the brickwork.

During the period of curing, the brick work shall be suitably protected from all damages. At the close of day's work or for other period of cessation, watering and curing shall have to be maintained. Should the mortar perish i.e. become dry, white or powdery through neglect of curing, work shall be pulled down to the extent required and rebuilt as directed by the Engineer. If any stains appear during watering, the same shall be removed from the surface.

1310 SCAFFOLDING

The scaffolding shall be sound, strong and safe to withstand all loads likely to come upon it. The holes which provide resting space for horizontal members shall not be left in masonry under one metre in width or immediately near the skew backs of arches. The holes left in the masonry work for supporting the scaffolding shall be filled and made good. Scaffolding shall be got approved by the Engineer, but its safety shall be the responsibility of the Contractor.

1311 EQUIPMENT

All tools and equipment used for mixing, transporting and laying of mortar and bricks shall be clean and free from set mortar, dirt or other injurious foreign substances.

1312 FINISHING OF SURFACES

1312.1 General

All brickwork shall be finished in a workmanlike manner with the thickness of joints, manner of striking or tooling as described in these specifications.

The surfaces can be finished by jointing, pointing or plastering, as shown on the drawings.

For a surface which is to be subsequently plastered or pointed, the joints shall be squarely raked out to a depth of 15 mm, while the mortar is still green. The raked joints shall be well brushed to remove dust and loose particles and the surface shall be thoroughly cleaned and wetted.

The mortar for finishing shall be prepared as per Clause 1304.

1312.2 Jointing

In jointing, the face of the mortar shall be worked out while still green to give a finished surface flush with the face of the brick work. The faces of brick work shall be cleaned to remove any splashes of mortar during the course of raising the brick work.

1312.3 Pointing

Pointing shall be carried out using mortar not leaner than 1:3 by volume of cement and sand or as shown on the drawing. The mortar shall be filled and pressed into the raked joints before giving the required finish. The pointing shall be ruled type for which it shall, while still green, be ruled along the centre with half round tools of such width as may be specified by the Engineer. The superfluous mortar shall then be taken off from the edges of the lines and the surface of the masonry shall be cleaned of all mortar. The work shall conform to IS:2212. Raised pointing which projects beyond the face of stone, brick or block shall be avoided.

1312.4 Plastering

Plastering shall be done where shown on the drawing. Superficial plastering may be done, if necessary, only in structures situated in fast flowing rivers or in severely aggressive environment.

Plastering shall be started from top and worked down. All holes shall be properly filled in advance of the plastering, while the scaffolding is being taken down. Wooden screeds 75 mm wide and of the thickness of the plaster shall be fixed vertically 2.5 m to 4 m apart,

to act as gauges and guides in applying the plaster. The mortar shall be laid on the wall between the screeds using the plasterer's float and pressing the mortar so that the raked joints are properly filled. The plaster shall then be finished off with a wooden straight edge reaching across the screeds. The straight edge shall be worked on the screeds with a small upward and sideways motion 50 mm to 75 mm at a time. Finally, the surface shall be finished off with a plasterer's wooden float. Metal floats shall not be used.

When re-commencing plastering beyond the work suspended earlier, the edges of the old plaster shall be scraped, cleaned and wetted before plaster is applied to the adjacent areas.

No portion of the surface shall be left unfinished for patching up at a later period.

The plaster shall be finished true to plumb surface and to the proper degree of smoothness as directed by the Engineer.

The average thickness of plaster shall not be less than that specified. The minimum thickness over any portion of the surface shall not be less than the specified thickness by more than 3 mm.

Any cracks which appear in the surface and all portions which sound hollow when tapped, or are found to be soft or otherwise defective, shall be cut in rectangular shape and re-done as directed by the Engineer.

1312.5 Curing of Finishes

Curing shall be commenced as soon as the mortar used for finishing has hardened sufficiently so as not to be damaged during curing. The curing shall be done for a period of at least 7 days, during which the finishing shall be suitably protected from all damages.

1312.6 Scaffolding for Finishes

Stage scaffolding independent of the structure, shall be provided for the work of finishing.

1313 COPING FOR WING/RETURN/PARAPET WALL

This work shall consist of providing an architectural coping for wing/return/parapet walls.

The material used shall be cement mortar 1:3 or as shown on the drawings prepared in accordance with Clause 1304.

The cement mortar shall be laid evenly to an average thickness of 15 mm to the full width of the top of the wall and in a band of 150 mm depth along the top outer face of the walls.

1314 ACCEPTANCE OF WORK

All work shall be true to lines and levels as indicated on the drawing or as directed by the Engineer, subject to tolerances as indicated in these specifications.

Mortar cubes shall be tested in accordance with IS:2250 for compressive strength, consistency of mortar and its water retentivity. The frequency of testing shall be one sample for every 2 cubic metres of mortar subject to a minimum 3 samples for a day's work.

In case of plaster finish, the minimum surface thickness shall not be less than the specified thickness by more than 3 mm.

1315 MEASUREMENTS FOR PAYMENT

1315.1 All brick work shall be measured in cubic metres. Any extra work done by the Contractor in excess of the specified dimensions, shall be ignored.

1315.2 In arches, the length of arch shall be measured as the average of the lengths along the extrados and the intrados.

1315.3 The work of plastering and pointing shall be measured in square metres of the surface treated.

1315.4 Coping shall be measured in linear metres.

1316 RATE

1316.1 The contract unit rate for brick work shall include the cost of all labour, materials, tools and plant, scaffolding and other expenses incidental to the satisfactory completion of the work, sampling, testing and supervision as described in these specifications and as shown on the drawings.

1316.2 The contract unit rate for plastering shall include the cost of all labour, materials, tools and plant, scaffolding and all incidental expenses, sampling, testing and supervision, as described in these specifications.

1316.3 The contract unit rate for pointing shall include erecting and removal of scaffolding, all labour, materials, and equipment incidental to completing the pointing, raking out joints, cleaning, wetting, filling with mortar, trowelling, pointing and watering, sampling and testing and supervision as described in these specifications.

1316.4 The contract unit rate for coping shall include cost of all labour, materials, tools and plant, sampling and testing and supervision as described in these specifications.

1400

STONE AND CONCRETE BLOCK MASONRY

1401 DESCRIPTION

This work shall consist of construction of structures with stones or concrete blocks jointed together by cement mortar in accordance with the details shown on the drawings and these specifications or as approved by the Engineer.

1402 MATERIALS

All materials to be used in stone and concrete block masonry, shall conform to Section 1000 of these Specifications, except cement mortar which shall conform to Clause 1304 of these Specifications.

1403 PERSONNEL

Only trained personnel shall be employed for construction and supervision.

1404 TYPE OF MASONRY

The type of masonry used for structures shall be random rubble (coursed or uncoursed) or coursed rubble (first sort) or concrete block. For bridge work generally, coursed rubble masonry shall be used. The actual type of masonry used for different parts of structures shall be specified on the drawings. For facing work, ashlar masonry shall be used where indicated on the drawings.

1405 CONSTRUCTION

1405.1 Stone Masonry

1405.1.1 General

The dressing of stone shall be as specified for individual type masonry work and it shall also conform to the general requirements of IS:1597 and requirement for dressing of stone covered in IS:1129. Other specific requirements are covered separately with respect to particular types of rubble stone work.

1405.1.2 Laying

1405.1.2.1 The masonry work shall be laid to lines, levels, curves and shapes as shown on the drawing. The height in each course shall be kept same and every stone shall be fine tooled on all beds, joints and faces, full and true. The exposed faces shall be gouged out, grooved, regulated and sunk or plain moulded as the case may be. The faces of each stone between the draft shall be left rough as the stone comes from the quarry, except where sacrificial layer is to be provided or plastering is resorted to in aggressive environment.

1405.1.2.2 Stones shall be sufficiently wetted before laying to prevent absorption of water from mortar.

Stratified stones shall be laid on their natural beds. All bed joints shall be normal to the direction of pressure coming on them.

Stones in the hearting shall be laid on their broadest faces so as to give better facility to fill the spaces between them.

The courses of the masonry shall ordinarily be pre-determined. They shall generally be of the same height. When there is to be variation in the height of courses, the larger courses are to be placed at lower levels, heights of courses decreasing gradually towards the top of the wall. The height of course shall not be less than 160 mm. placing loose mortar on the course and pouring water on it to fill the gaps in stones is not acceptable. Mortar shall be mixed thoroughly and poured in the joints in fluid state. No dry or hollow space shall be left anywhere in the masonry and each stone shall have all the embedded faces completely covered with mortar.

In tapered walls, the beds of the stones and the planes of course should be at right angles to the batter. In case of bridge piers with batter on both sides, the course shall be horizontal.

The bed which is to receive the stone, shall be cleaned, wetted and covered with a layer of fresh mortar. All stones shall be laid full in mortar both in bed and vertical joints and settled carefully in place with a wooden mallet immediately on placement and solidly embedded in mortar before it has set. Clean chips and spalls shall be wedged into the mortar joints and bed wherever necessary to avoid thick beds or joints of mortar. When the foundation masonry is laid directly on rock, the face stones of the first course shall be dressed to fit into rock snugly, when pressed down in the mortar bedding over the rock. No dry or hollow space shall be left anywhere in the masonry and each stone shall have all the embedded faces completely covered with mortar. For masonry works over rock, a levelling course of 150 mm thick M15 concrete, shall be laid over rock and then stone masonry work shall be laid without foundation concrete block.

Face works and hearting shall be brought up evenly but the top of each course shall not be levelled by the use of flat chips.

For sharp corners specially in skew bridges, through stones shall be used in order to avoid spalling of corners.

In case any stone already set in mortar, is disturbed or the joints broken, it shall be taken out without disturbing the adjoining stones and joints. Dry mortar shall be thoroughly cleaned from the joints and stones and the stones reset in fresh mortar. When freshly laid, no attempt shall be made to slide one stone on top of another.

Shaping and dressing shall be done before the stone is laid in the work. No dressing or hammering, which will loosen the masonry, will be allowed after the stone is placed in position. All necessary chases for joggles, dowels and clamps, should be formed beforehand.

Sufficient transverse bonds shall be provided by the use of bond stone extending from the front to the back of the wall and in case of thick wall, from outside to the interior and vice versa. In the latter case, bond stones shall overlap each other in their arrangement.

In case headers are not available, precast headers of M15 concrete shall be used. Cast in-situ headers are not permitted.

Stones shall break joint on the face for at least half the height of the course and the bond shall be carefully maintained throughout.

In band work at all angle junctions of walls, the stones at each alternate course shall be carried into each of the respective walls so as to unite the work thoroughly.

Building up thin faces tied with occasional through stones and filling up the middle with small broken stones or even dry packing, is not acceptable.

All quoins and the angles of the opening shall be made from selected stones, carefully squared and bedded and arranged to bond alternately long and short in both directions.

All vertical joints shall be truly vertical. Vertical joints shall be staggered as far as possible. Distance between the vertical joints of upper layer and lower layer, shall not be less than half the height of the course.

Only rectangular shaped bond stones or headers shall be used. Bond stones shall overlap each other by 150 mm or more.

All connected masonry in a structure shall be carried up nearly at one uniform level throughout but when breaks are unavoidable, the masonry shall be raked in sufficiently long steps to facilitate jointing of old and new work. The stepping of raking shall not be more than 45 degree with the horizontal.

1405.1.3 Random Rubble Masonry (Uncoursed and Coursed)

1405.1.3.1 Dressing

The stone shall be hammer dressed on the face, the sides and beds to enable it to come in proximity with the neighbouring stone. The bushing on the exposed face shall not be more than 40 mm.

1405.1.3.2 Insertion of Chips

Chips and spalls of stone may be used wherever necessary to avoid thick mortar beds or joints and it shall be ensured that no hollow spaces are left anywhere in the masonry. The chips shall not be used below hearting stones to bring these upto the level of face stones. Use of chips shall be restricted to filling of interstices between the adjacent stones in hearting and they shall not exceed 20 percent of the quantity of stone masonry.

1405.1.3.3 Hearting Stones

The hearting or interior filling of the wall face shall consist of rubble stones not less than 150 mm long in any direction, carefully laid, hammered down with a wooden mallet into position and solidly bedded in mortar. The hearting should be laid nearly level with facing and backing.

1405.1.3.4 Bond Stones

Through bond stones shall be provided in masonry upto 600 mm thickness and in case

of masonry above 600 mm thickness, a set of two or more bond stones overlapping each other at least by 150 mm shall be provided in a line from face to back. In case of highly absorbent types of stones (porous limestone and sandstones, etc.,) the bond stone shall extend only about two-thirds into the wall, as through stones in such cases may give rise to penetration of dampness and therefore, for all thicknesses of such masonry, a set of two or more bond stones overlapping each other by at least 150 mm shall be provided. One bond stone or a set of bond stones shall be provided for ever 0.50 sq.m of the masonry surface.

1405.1.3.5 Quoin Stone

Quoin stone specially selected and neatly dressed for forming an external angle in masonry work, shall not be less than 0.03 Cu.m in volume.

1405.1.3.6 Plum Stone

The plum stones are selected long stones embedded vertically in the interior of the masonry to form a bond between successive courses and shall be provided at about 900 mm intervals.

1405.1.3.7 Laying

The masonry shall be laid with or without courses as specified. The quoins shall be laid header and stretcher alternately. Every stone shall be fitted to the adjacent stone so as to form neat and close joint. Face stone shall extend and bond well in the back. These shall be arranged to break joints, as much as possible, and to avoid long vertical lines of joints.

1405.1.3.8 Joints

The face joints shall not be more than 20 mm thick, but shall be sufficiently thick to prevent stone-to-stone contact and shall be completely filled with mortar.

1405.1.4 Coursed Rubble Masonry (First Sort)

1405.1.4.1 Dressing

Face stone shall be hammer dressed on all beds and joints so as to give them rectangular shape. These shall be square on all joints and beds. The bed joints shall be chisel drafted for at least 80 mm back from the face and for at least 40 mm for the side joints. No portion of the dressed surface shall show a depth of gap more than 6 mm from the straight edge placed on it. The remaining unexposed portion of the stone shall not project beyond the surface of bed and side joints. The requirements regarding bushing shall be the same as for random rubble masonry.

1405.1.4.2 Hearting Stones

The hearting or interior filling of the wall face shall consist of flat bedded stone carefully laid, on prepared beds in mortar. The use of chips shall be restricted to the filling of interstices between the adjacent stones in hearting and these shall not exceed 10 percent of the quantity

of masonry. While using chips it shall be ensured that no hollow spaces are left anywhere in the masonry.

1405.1.4.3 Bond Stones

The requirements regarding through or bond stone shall be the same as for random rubble masonry, but these, shall be provided at 1.5 to 1.8 metre apart clear in every course.

1405.1.4.4 Quoin Stone

The quoins shall be of the same height as the course in which they occur and shall be formed of header stones not less than 450 mm in length. They shall be laid lengthwise alternately along each face, square in their beds which shall be fairly dressed to a depth of a least 100 mm.

1405.1.4.5 Face Stone

Face stones shall tail into the work for not less than their heights and at least one-third of the stones shall tail into the work for a length not less than twice their height. These shall be laid as headers and stretchers alternately.

1405.1.4.6 Laying

The stones shall be laid on horizontal courses and all vertical joints should be truly vertical. The quoin stones should be laid header and stretcher alternately and shall be laid square on their beds, which shall be rough chisel dressed to a depth of at least 100 mm.

1405.1.4.7 Joints

The face joints shall not be more than 10 mm thick, but shall be sufficiently thick to prevent stone-to-stone contact and shall be completely filled with mortar.

1405.1.5 Ashlar Masonry (Plain Ashlar)

1405.1.5.1 Dressing

Every stone shall be cut to the required size and shape, chisel dressed on all beds and joints, so as to be free from all bushing. Dressed surface shall not show a depth of gap of more than 3 mm from straight edge placed on it. The exposed faces and joints, 6 mm from the face shall be fine tooled so that a straight edge can be laid along the face of the stone in contact with every point. All visible angles and edges shall be true and square and free from chippings. The corner stones (quoins) shall be dressed square and corner shall be straight and vertical.

1405.1.5.2 Bond Stones

Through bond stones shall be provided for masonry up to 600 mm thickness and for masonry above 600 mm thickness, a set of two or more bond stones overlapping each other at least by 150 mm, shall be provided in a line from face to back. In case of highly absorbent types of stones (porous limestone and sandstones, etc.,) the bond stone shall extend only about two-thirds into the wall, as through stones in such cases may give rise to penetration of dampness. For masonry with such stones, a set of two or more bond stones overlapping each other by at least 150 mm shall be provided. One bond stone or a set of bond stones shall be 1.5 to 1.8 metre apart clear in every course.

1405.1.5.3 Laying

The face stone shall be laid header and stretcher alternately, the header being arranged to come as nearly as possible in the middle of stretchers above and below. Stones shall be laid in regular courses not less than 300 mm in height and all courses of the same height, unless otherwise specified. No stone shall be less in width than its height or less in length than twice its height, unless otherwise specified.

1405.1.5.4 Joints

All joints shall be full of mortar. These shall not be less than 3 mm thick. Face joints shall be uniform throughout, and a uniform recess of 20 mm depth from face shall be left with the help of a stone plate during the progress of work.

1405.2 Concrete Block Masonry

1405.2.1 Laying

The bed, which is to receive the block, shall be cleaned, wetted and covered with a layer of fresh mortar. The masonry works shall be laid to lines, levels, curves and shapes as shown on the drawing. In battered sections, the beds of blocks and the plane of courses shall be horizontal. Face blocks for such sections shall be manufactured specially for the purpose.

The block shall be soaked in water for at least 15 minutes before laying, to prevent absorption of water from mortar.

Concrete block masonry shall be constructed generally like fine tooled ashlar masonry. Each block must be fitted into its place dry in order that discrepancy of figure may be discovered and corrected before it is finally laid in mortar and settled in bed. The block shall be laid full in thin mortar, the bed and side joints being not more than 15 mm in thickness. Each block shall be struck with a wooden mallet when laid in place in mortar to bring it to solid bearing as to bed and joints. All visible edges shall be free from chippings.

The course shall be horizontal and side joints vertical throughout unless otherwise indicated in plans. Joints shall be struck.

For bond, face blocks shall be laid header and stretcher alternately unless otherwise ordered by the Engineer, the header being arranged to come as nearly as possible in the middle of stretchers below. The blocks in the courses above and below shall break joints for about half the height of the course and bond shall be carefully maintained throughout section.

While carrying out masonry work, templates prepared to the correct shape and approved by the Engineer, shall be used to ensure correct batter as well as correct shape of masonry, specially cut and ease water in piers. The finished work shall be checked at every stage by the competent authority to ensure that it has the correct shape and batter as required by design.

In case of skew bridges and for cut and ease water, the acute angle at the corners shall not be less than 45 degree. In case a smaller angle cannot be avoided, then a flat face of 100 mm shall be provided.

1406 POINTING

Pointing shall be carried out using mortar not leaner than 1:3 by volume of cement and sand or as shown on the drawing. The mortar shall be filled and pressed into the raked out joints before giving the required finish. The pointing shall conform to Clause 1312.3 of these specification. The work shall conform to IS:2212. The thickness of joints shall not be less than 3 mm for ashlar masonry. However, the maximum thickness of joints in different works shall be as follows:

Random Rubble	:	20 mm
Coursed Rubble	:	15 mm
Ashlar Masonry	:	5 mm

1407 CURING

Curing shall conform to Clauses 1309 and 1312.5 of these Specifications.

1408 SCAFFOLDING

For scaffolding, Clause 1310 of these Specifications, shall apply.

1409 WEEP HOLES

Weep holes shall conform to Clauses 2706 of these Specifications.

1410 JOINTING WITH EXISTING STRUCTURES

For jointing with existing structures, the specifications as given for brick masonry under Clause 1308 of these Specifications, shall apply for stone masonry also.

1411 COPING FOR WING/RETURN/PARAPET WALLS

Coping for wing/return/parapet walls shall conform to Clause 1313 of these Specifications.

1412 TESTS AND STANDARDS OF ACCEPTANCE

All work shall be done to the lines and levels as indicated on the drawing or as directed by the Engineer, subject to tolerances as specified in these specifications.

Mortar cubes shall be taken in accordance with IS:2250 for testing of compressive strength, consistency and water retentivity. The frequency of testing shall be one sample for every two cubic metres of mortar subject to a minimum of 3 samples for a day's work.

1413 MEASUREMENTS FOR PAYMENT

1413.1 Stone masonry shall be measured in cubic metres.

1413.2 In arches, the length of arch shall be measured as the average of the lengths along the extrados and the intrados.

1413.3 The work of pointing shall be measured in square metres.

1413.4 Architectural coping shall be measured in linear metres.

1414 RATE

1414.1 The contract unit rate for stone masonry shall include the cost of all labour, materials, tools and plant, scaffolding, sampling and testing, supervision and other expenses incidental to the satisfactory completion of the work as described in these Specifications.

1414.2 The contract unit rate for pointing shall include erecting and removal of scaffolding, all labour, materials and equipment incidental to completing the pointing, raking out joints, cleaning, wetting, filling with mortar, trowelling, pointing and watering, sampling and testing and supervision as described in these specifications.

1414.3 The contract unit rate for coping shall include the cost of all labour, materials, tools and plant, sampling and testing and supervision as described in these specifications.

1500

FORMWORK

1501 DESCRIPTION

Formwork shall include all temporary or permanent forms required for forming the concrete of the shape, dimensions and surface finish, as shown on the drawing or as directed by the Engineer, together with all props, staging, centering, scaffolding and temporary construction required for their support.

1502 MATERIALS

All materials shall comply with the requirements of IRC:87. Materials and components used for formwork shall be examined for damage or excessive deterioration before use/re-use and shall be used only if found suitable after necessary repairs. In case of timber formwork, the inspection shall not only cover physical damages but also signs of attacks by decay, rot or insect attack or the development of splits.

Forms shall be constructed with metal or timber. The metal used for forms shall be of such thickness that the forms remain true to shape. All bolts should be countersunk. The use of approved internal steel ties or steel or plastic spacers shall be permitted. Structural steel tubes used as support for forms shall have a minimum wall thickness of 4 mm. Other materials conforming to the requirements of IRC:87 may also be used if approved by the Engineer.

1503 DESIGN OF FORMWORK

1503.1 The design, erection and removal of formwork shall conform to IRC:87 "Guidelines for Formwork, Falsework and Temporary Structures" and these specifications. The forms shall be such as to ensure that they can be conveniently removed without disturbing the concrete. The design shall facilitate proper and safe access to all parts of formwork for inspection.

1503.2 The Contractor shall furnish the design and drawing of complete formwork (i.e. the forms as well as their supports) for approval of the Engineer before any erection is taken up. If proprietary system of formwork is used, the Contractor shall furnish detailed information as per Appendix 1500/I, to the Engineer for approval.

Notwithstanding any approval or review of drawing and design by the Engineer, the Contractor shall be entirely responsible for the adequacy and safety of formwork.

1503.3 In the case of prestressed concrete superstructure, careful consideration shall be given to redistribution of loads on props due to prestressing.

1504 WORKMANSHIP

1504.1 The formwork shall be robust and strong and the joints shall be leak-proof.

Ballies shall not be used as staging. Staging must have cross bracings and diagonal bracings in both directions. Staging shall be provided with an appropriately designed base plate resting on firm strata.

1504.2 The number of joints in the formwork shall be kept to a minimum by using large sized panels. The design shall provide for proper "soldiers" to facilitate alignment. All joints shall be leak proof and must be properly sealed. Use of PVC joint sealing tapes, foam rubber or PVC T-section, is essential to prevent leakage of grout.

1504.3 As far as practicable, clamps shall be used to hold the forms together. Where use of nails is unavoidable, minimum number of nails shall be used and these shall be of the double-headed type. Alternatively, if the nails are of the normal type, they shall be left partially projecting without being driven to their full length, so that they can be withdrawn easily.

1504.4 Use of ties shall be restricted, as far as practicable. Wherever ties are used they shall be used with HDPE sheathing so that they can easily be removed. No parts prone to corrosion shall be left projecting or near the surface. The sheathing shall be grouted with cement mortar of the same strength as that of the structure.

1504.5 Unless otherwise specified, or directed, chamfers or fillets of size 25 mm x 25 mm shall be provided at all angles of the formwork to avoid sharp corners. The chamfers, beveled edges and mouldings shall be made in the formwork itself. Opening for fixtures and other fittings shall be provided in the shuttering as directed by the Engineer.

1504.6 Shuttering for walls, sloping members and thin sections of considerable height shall be provided with temporary openings to permit inspection and cleaning out before placing of concrete.

1504.7 The formwork shall be constructed with pre-camber to the soffit to allow for deflection of the formwork. This shall be in addition to the pre-camber for the permanent structure as shown on the drawings.

1504.8 Where centering trusses or launching trusses are adopted for casting of superstructure, the joints of the centering trusses, whether welded, riveted or bolted shall be thoroughly checked periodically. Also, various members of the centering trusses should be periodically examined for proper alignment and unintended deformation before proceeding with the concreting. They shall also be periodically checked for any deterioration in quality due to steel corrosion. Launching truss, casting truss of span more than 40 m and travelling forms, shall be load tested before they are put to use.

1504.9 The formwork shall be so made as to produce a finished concrete true to shape, line and levels and dimensions as shown on the drawings, subject to the tolerances specified in respective Sections of these specifications, or as directed by the Engineer.

1504.10 Where metal forms are used, all bolts and rivets shall be countersunk and well ground to provide a smooth, plane surface. Where timber is used it shall be well seasoned, free from loose knots, projecting nails, splits or other defects that may mar the surface of concrete.

1504.11 Forms shall be made sufficiently rigid by the use of ties and bracings to prevent any displacement or sagging between supports. They shall be strong enough to withstand all pressure, ramming and vibration during and after placing the concrete. Screw

jacks or hard wood wedges where required shall be provided to make up any settlement in the formwork either before or during the placing of concrete.

1504.12 The formwork shall ensure the correct final shape of the structure, with the calculated amount of positive or negative camber. The deformation of falsework, scaffolding or propping and the instantaneous or deferred deformation due to various causes arising in prestressed structures, shall be properly accounted for.

1504.13 Suitable camber shall be provided to horizontal members of structure, specially in long spans, to counteract the effects of deflection. The formwork shall be so fixed as to provide for such camber.

1504.14 The formwork shall be coated with an approved release agent that will effectively prevent sticking and will not stain the concrete surface. Lubricating oils (machine oils) shall be prohibited for use as coating.

1505 LINING OF FORMWORK

The formwork shall be lined with material approved by the Engineer so as to provide a smooth finish of uniform texture and appearance. This material shall leave no stain on the concrete and shall be so fixed to its backing as not to impart any blemishes. It shall be of the same type and obtained from only one source throughout for the construction of any one structure. The contractor shall make good any imperfections in the resulting finish as required by the Engineer. Internal ties and embedded metal parts shall be carefully detailed and their use shall be subject to the approval of the Engineer.

1506 PRECAUTIONS

The following precautions shall be observed:

i) It shall be ensured that any cut-outs or openings provided in any structural member to facilitate erection of formwork, are closed with the same grade of concrete as that of the structure, after formwork is removed.

ii) Provision for safe access to the formwork shall be made at all levels as required.

iii) Close watch shall be maintained to check for settlement of formwork during concreting and any settlement shall be promptly rectified.

iv) Natural ground shall be checked for bearing capacity and likely settlement before erection of the staging.

v) It shall be ensured that water used for curing or rain water does not stagnate near the base plate of the staging.

vi) For shutters used for deep and narrow member, temporary openings in the sides shall be provided to facilitate pouring and compaction of concrete.

1507 PREPARATION OF FORMWORK BEFORE CONCRETING

The inside surfaces of forms shall, except in the case of permanent formwork or where otherwise agreed to by the Engineer, be coated with a release agent supplied by approved manufacturer or of an approved material to prevent adhesion of concrete to the formwork. Release agents shall be applied strictly in accordance with the manufacturer's instructions and shall not be allowed to come in contact with any reinforcement or prestressing tendons and anchorages. Different release agents shall not be used in formwork for exposed concrete.

Before re-use of forms, the following actions shall be taken :

i) The contact surfaces of the forms shall be cleaned carefully and dried before applying a release agent.

ii) It should be ensured that the release agent is appropriate to the surface to be coated. The same type and make of release agent shall be used throughout on similar formwork materials and different types should not be mixed.

iii) The form surfaces shall be evenly and thinly coated with release agent. The vertical surface shall be treated before horizontal surface and any excess wiped out.

iv) It shall be ensured that the reinforcement or the surface of the hardened concrete shall not come in contact with the release agent.

All forms shall be thoroughly cleaned immediately before concreting.

The Contractor shall give the Engineer due notice before placing any concrete in the forms to permit him to inspect and approve the formwork. However, such inspection shall not relieve the contractor of his responsibility for safety of formwork, men, machinery, materials and finish or tolerances of concrete.

1508 REMOVAL OF FORMWORK

The scheme for removal of formwork (i.e. de-shuttering and de-centering) shall be planned in advance and furnished to the Engineer for scrutiny and approval. No formwork or any part thereof shall be removed without prior approval of the Engineer.

The formwork shall be so removed as not to cause any damage to concrete. Centering shall be gradually and uniformly lowered in such a manner as to permit the concrete to take stresses due to its own weight uniformly and gradually to avoid any shock or vibration.

Form work shall not be released unless the concrete has achieved strength of at least twice the stress the concrete may be subjected at the time of the removal of formwork. When no

test is conducted for determination of strength of concrete and where the time of removal of formwork is not specified, the same shall be as under :

a)	Walls, piers, abutments, columns and vertical faces of structural members	12 to 48 hours as may be decided by the Engineer
b)	Soffits of Slabs (with props left under)	3 days
c)	Props left under slabs	14 days
d)	Soffits of Girders (with props left under)	7 days
e)	Props (left under girders)	21 days

The above time schedule is applicable when ordinary Portland Cement is used without any admixtures at an ambient temperature exceeding 10°C.

For concrete made with Portland pozzolona cement, Portland slag cement or mineral admixtures, additional cube samples shall be taken for verifying the strength of concrete to decide the time of deshuttering.

Where there are re-entrant angles in the concrete sections, the formwork should be removed at these sections as soon as possible after the concrete has set, in order to avoid cracking due to shrinkage of concrete.

Additional precautions as given in Clause 8.17 of IRC: 87, shall also be followed.

1509 RE-USE OF FORMWORK

When the formwork is dismantled, its individual components shall be examined for damage and damaged pieces shall be removed for rectification. Such examination shall always be carried out before their use again. Before re-use all components shall be cleaned of deposits of soil, concrete or other unwanted materials. Threaded parts shall be oiled after cleaning.

All bent steel props shall be straightened before re-use. The maximum permissible deviation from straightness is 1/600 of the length. The maximum permissible axial loads in used props shall be suitably reduced depending upon their condition. The condition of the timber components, plywood and steel shuttering plates shall be examined closely for distortion and defects before re-use.

1510 SPECIALISED FORMWORK

Specialised formwork such as slipform, floating caisson and travelling form, wherever used shall be designed and detailed by competent agencies and a set of complete working drawings and installation instructions supplied to the Engineer. In case proprietary equipment is used, the supplier shall furnish drawings, details, installation instructions etc, in the form of manuals along with the formwork.

For slipform, the rate of climb of the formwork shall be designed for each individual case taking into account various parameters including the grade of concrete, concrete strength, concrete temperature, ambient temperature and concrete admixtures.

For floating caisson, the details of fabrication, floating to site and placing in position shall be as given in Clause 1203.5 of these Specifications.

In order to verify the time and sequence of striking/removal of specialised formwork, routine field tests for the consistency and strength development of concrete are mandatory.

For specialised formwork, the form lining material may be either plywood or steel sheet of appropriate thickness.

1511 TESTS AND STANDARDS OF ACCEPTANCE

The materials shall be tested in accordance with these Specifications and shall meet the prescribed criteria. The work shall conform to these Specifications and shall meet the prescribed standards of acceptance.

1512 MEASUREMENTS FOR PAYMENT

Unless stated otherwise, the rate for concrete in plain concrete or reinforced concrete or prestressed concrete, shall be deemed to include all formwork required in accordance with this Section, which shall not be measured separately.

Where it is specifically stipulated in the Contract that the formwork shall be paid for separately, measurement of formwork shall be taken in square metres of the surface area of concrete which is in contact with formwork.

1513 RATE

The unit rate of plain concrete or reinforced concrete or prestressed concrete as defined in respective Sections of these Specifications, shall be deemed to cover the costs of all formwork and staging, including cost of all materials, labour, tools and plant required for design, construction and removal of formwork and supervision as described in this Section including properly supporting the members until the concrete is cured, set and hardened as required.

Where the contract unit rate for formwork is specially provided as a separate item in the contract, it shall include the cost of all materials, labour, tools and plant required for design, construction and removal of formwork and supervision as described in this Section including properly supporting the members until the concrete is cured, set and hardened as required.

1600

STEEL REINFORCEMENT

1601 DESCRIPTION

This work shall consist of furnishing and placing coated or uncoated mild steel or high strength deformed reinforcement bars of the shape and dimensions shown on the drawings and conforming to these Specifications or as approved by the Engineer.

1602 GENERAL

Steel for reinforcement shall meet the requirements of **Section 1000** of these Specifications.

Reinforcements may be either mild steel or high strength deformed bars. They may be uncoated or coated with epoxy.

1603 PROTECTION OF REINFORCEMENT

Uncoated reinforcing steel shall be protected from rusting or chloride contamination. Reinforcements shall be free from rust, mortar, loose mill scale, grease, oil or paints. This may be ensured either by using reinforcement fresh from the factory or by thoroughly cleaning it using any suitable method such as sand blasting, mechanical wire brushing etc., as directed by the Engineer. Reinforcements shall be stored above the ground in a clean and dry condition, on blocks, racks or platforms and shall be suitably marked to facilitate inspection and identification.

Portions of uncoated reinforcing steel and dowels projecting from concrete, shall be protected within one week after initial placing of concrete, with a brush coat of neat cement mixed with water to a consistency of thick paint. This coating shall be removed by lightly tapping with a hammer or other tool not more than one week before placing of the adjacent pour of concrete. Coated reinforcing steel shall be protected against damage to the coating. If the coating on the bars is damaged during transportation or handling and cannot be repaired, the same shall be rejected.

In case of fusion bonded epoxy coated reinforcement or hot dipped galvanized bars used, reference shall be made Clause 1010.3.2 of Section 1000 of these specifications.

1604 BENDING OF REINFORCEMENT

Bar bending schedule shall be furnished by the Contractor and got approved by the Engineer before start of work.

Reinforcing steel shall conform to the dimensions and shapes given in the approved Bar Bending Schedules.

Bars shall be bent cold to the specified shape and dimensions or as directed by the Engineer using a proper bar bender, operated by hand or power to obtain the correct shape and radii of bends.

Bars shall not be bent or straightened in a manner that will damage the parent material or the coating.

Bars bent during transport or handling shall be straightened before being used on work. They shall not be heated to facilitate straightening.

1605 PLACING OF REINFORCEMENT

a) The reinforcement cage should generally be fabricated in the yard at ground level and then shifted and placed in position. The reinforcement shall be placed strictly in accordance with the drawings and shall be assembled in position only when the structure is otherwise ready for placing of concrete. Prolonged time gap between assembling of reinforcement and casting of concrete, which may result in rust formation on the surface of the bars, shall not be permitted.

b) Reinforcement bars shall be placed accurately in position as shown on the drawings. The bars, crossing one another shall be tied together at every intersection with binding wire (annealed), conforming to IS:280 to make the skeleton of the reinforcement rigid such that the reinforcement does not get displaced during placing of concrete, or any other operation. The diameter of binding wire shall not be less than 1 mm.

c) Bars shall be kept in position usually by the following methods:

   i) In case of beam and slab construction, industrially produced polymer cover blocks of thickness equal to the specified cover, shall be placed between the bars and formwork, subject to satisfactory evidence that the polymer composition is not harmful to concrete and reinforcement. Cover blocks made of concrete may be permitted by the Engineer, provided they have the same strength and specification as those of the member.

   ii) In case of dowels for columns and walls, the vertical reinforcement shall be kept in position by means of timber templates with slots cut in them accurately, or with cover blocks tied to the reinforcement. Timber templates shall be removed after the concreting has progressed upto a level just below their location.

   iii) Layers of reinforcements shall be separated by spacer bars at approximately one metre intervals. The minimum diameter of

spacer bars shall be 12 mm or equal to maximum size of main reinforcement or maximum size of coarse aggregate, whichever is greater. Horizontal reinforcement shall not be allowed to sag between supports.

iv) Necessary stays, blocks, metal chairs, spacers, metal hangers, supporting wires etc. or other subsidiary reinforcement shall be provided to fix the reinforcement firmly in its correct position.

v) Use of pebbles, broken stone, metal pipe, brick, mortar or wooden blocks etc., as devices for positioning reinforcement shall not be permitted.

d) Bars coated with epoxy shall be placed on supports that do not damage the coating. Supports shall be installed in a manner such that planes of weakness are not created in hardened concrete. The coated reinforcing steel shall be held in place by use of plastic or plastic coated binding wires especially manufactured for the purpose. Refer Section 1000 of these Specifications for other requirements.

e) Placing and fixing of reinforcement shall be inspected and approved by the Engineer before concreting is commenced.

1606 BAR SPLICES

1606.1 Lapping

All reinforcement shall be furnished in full lengths as indicated on the drawing. No splicing of bars, except where shown on the drawing, shall be permitted without approval of the Engineer. The lengths of the splice shall be as indicated on drawing or as approved by the Engineer. Where practicable, overlapping bars shall not touch each other, and shall be kept apart by 25 mm or 1.25 times the maximum size of coarse aggregate, whichever is greater. If this is not feasible, overlapping bars shall be bound with annealed steel binding wire not less than 1 mm diameter and twisted tight in such a manner as to maintain minimum clear cover to the reinforcement from the concrete surface. Lapped splices shall be staggered or located at points along the span where stresses are low.

1606.2 Welding

1606.2.1 Splicing by welding of reinforcement will be permitted only if detailed on the drawing or approved by the Engineer. Weld shall develop an ultimate strength equal to or greater than that of the bars connected.

1606.2.2 While welding may be permitted for mild steel reinforcing bars conforming to IS:432, welding of deformed bars conforming to IS:1786 shall in general be prohibited. Welding may be permitted in case of bars of other than Fe 240 grade including special

welding grade of Fe 415 grade bars conforming to IS:1786, for which necessary chemical analysis has been secured and the carbon equivalent (CE) calculated from the chemical composition using the formula :

$$CE = C + \frac{Mn}{6} + \frac{Cr+Mg+V}{5} + \frac{Ni+Cu}{15}$$

is 0.4 or less.

1606.2.3 The method of welding shall conform to IS:2751 and IS:9417, any supplemental specifications and Clause 1904.8 of these Specifications to the satisfaction of the Engineer.

Welding may be carried out by metal arc welding process. Oxy-acetelene welding shall not be permissible. Any other process may be used subject to the approval of the Engineer and necessary additional requirements to ensure satisfactory joint performance. Precautions on overheating, choice of electrode, selection of correct current in arc welding etc., should be strictly observed.

All bars shall be butt welded except for smaller diameter bars (diameter of less than 20 mm) which may be lap welded. Single-V or Double-V butt joints may generally be used. For vertical bars single bevel or double bevel joints may be used.

Welded joints shall be located well away from bends and shall be not less than twice the bar diameter away from a bend.

Generally, shop welding in controlled conditions is to be preferred, where feasible. Site welding where necessary shall, however, be permitted when the facilities, equipment, process, consumables, operators and welding procedure, are adequate to produce and maintain uniform quality at par with that attainable in shop welding, to the satisfaction of the Engineer.

Joint welding procedures which are to be employed shall invariably be established by a procedure specification. All welders and welding operators to be employed shall be qualified by tests prescribed in IS:2751. Inspection of welds shall conform to IS:822 and destructive or non-destructive testing may be undertaken when deemed necessary. Joints with weld defects detected by visual inspection or dimensional check inspection, shall not be accepted.

Suitable means shall be provided for holding the bars securely in position during welding. It must be ensured that no voids are left in welding. When welding is done in two or three stages, the surface shall be cleaned properly after each stage. Bars shall be cleaned of all loose scale, rust, grease, paint and other foreign matter before carrying out welding. Only competent and experienced welders shall be employed on the work with the approval of the Engineer. No welding shall be done on coated bars.

M.S. electrodes used for welding shall conform to IS:814.

1606.2.4 Welded joints shall preferably be located at points where steel will not be subject to more than 75 percent of the maximum permissible stresses and welds so staggered that at any one section, not more than 20 percent of the bars are welded.

1606.2.5 Specimens of welded pieces of reinforcement taken from the site, shall be tested. The number and frequency of tests shall be as directed by the Engineer.

1606.3 Mechanical Couplers and Anchorages

1606.3.1 Mechanical Couplers

Bars may be joined with approved patented mechanical devices as indicated on the drawing or as approved by the Engineer e.g. by special grade steel sleeves swaged on to bars in end to end contact or by screwed couplers. In case such devices are permitted by the Engineer, they shall develop at least 125 percent of the characteristic strength of the reinforcement bar.

1606.3.2 Anchorages

Bars may be anchored with approved patented mechanical anchorages as indicated on the drawing or as approved by the Engineer. The anchorages shall be connected to the reinforcing bar by the use of taper thread system. The anchorage shall be capable of developing the characteristic strength of reinforcement without damage to concrete and shall have sufficient diameter and width to develop adequate shear cone strength. The connection shall develop 125% of the characteristic strength of reinforcement bar.

1607 TESTING AND ACCEPTANCE

The material shall be tested in accordance with relevant IS specifications and necessary test certificates shall be furnished. Additional tests, if required, will be got carried out by the Contractor at his own cost.

The supply, fabrication and placing of reinforcement shall be in accordance with these Specifications and shall be as checked and accepted by the Engineer.

Manufacturer's test certificate regarding compliance with Indian Standards for each lot of steel, shall be obtained and submitted to the Engineer. If required by the Engineer, the Contractor shall carry out confirmatory tests in the presence of a person authorized by the Engineer. Cost of these tests shall be borne by the Contractor. The sampling and testing procedure shall be as laid down in IS:1786. If any test piece selected from a lot fails, no re-testing shall be done and the lot shall be rejected.

1608 MEASUREMENT FOR PAYMENT

Reinforcement shall be measured in length including hooks, if any, separately for different diameters as actually used in work, excluding overlaps. From the length so measured, the

weight of reinforcement shall be calculated in tonnes on the basis of IS:1732. Wastage, overlaps, couplings, welded joints, spacer bars, chairs, stays, hangers and annealed steel wire or other methods for binding and placing, shall not be measured and cost of these items shall be deemed to be included in the rates for reinforcement.

1609 RATE

The contract unit rate for coated/uncoated reinforcement shall cover the cost of material, royalty, fabricating, transporting, storing, bending, placing, binding and fixing in position as shown on the drawings and as per these Specifications and as directed by the Engineer, including all labour, equipment, supplies, incidentals, sampling, testing and supervision.

The unit rate for coated reinforcement shall be deemed to also include cost of all material, labour, tools and plant, royalty, transportation and expertise required to carry out the coating work as well as sampling, testing and supervision required for the work.

1700

STRUCTURAL CONCRETE

1701 DESCRIPTION

The work shall consist of producing, transporting, placing and compacting of structural concrete including fixing formwork and temporary works etc. and incidental construction in accordance with these Specifications and in conformity with the lines, grades and dimensions, as shown on the drawings or as directed by the Engineer.

1702 MATERIALS

All materials shall conform to Section 1000 of these Specifications.

1703 GRADES OF CONCRETE

1703.1 The grades of concrete shall be designated by the characteristic strength as given in Table 1700-1, where the characteristic strength is defined as the strength of concrete below which not more than 5 percent of the test results are expected to fall.

Table 1700-1 : Grades of Concrete

Type of Concrete/Grade Designation			Characteristic Strength in MPa
Nominal Mix Concrete	**Standard Concrete**	**High Performance Concrete**	
M15	M15		15
M20	M20		20
	M25		25
	M30	M30	30
	M40	M35	35
	M45	M40	40
	M50	M45	45
		M50	50
		M55	55
		M60	60
		M65	65
		M70	70
		M75	75
		M80	80
		M85	85
		M90	90

1) Normal Mix Concrete is made on the basis of nominal mix proportioned by weight of its main ingredients – cement, coarse and fine aggregates and water.

2) Standard concrete is made on the basis of design mix proportioned by weight of its ingredients, which in addition to cement, aggregates and water, may contain chemical admixtures to achieve certain target values of various properties in fresh condition, achievement of which is monitored and controlled during production by suitable tests. Generally, concrete of grades up to M50 are included in this type.

3) High Performance Concrete is similar to standard concrete but contains additional one or more mineral admixtures providing binding characteristics and partly acting as inert filler material which increases its strength, reduces its porosity and modifies its other properties in fresh as well as hardened condition. Concrete of grades upto M90 are included in this type.

4) For concrete of grades higher than M90, the design parameters may be obtained from specialized literature and experimental results.

1703.2 The minimum grades of concrete and corresponding minimum cement content and maximum water/cement ratios for different exposure conditions shall be as indicated in Table 1700-2.

1703.3 For concrete subjected to sulphate attack the minimum grades of concrete, minimum cement content and maximum water/cement ratios and types of cement for different concentration of sulphate content shall be as indicated in Table 1700-3.

Table 1700-2 : Requirement of Concrete for Different Exposure Condition using 20 mm Aggregate

Exposure Condition	Maximum Water Cement Ratio	Minimum Cement Content, kg/m^3	Minimum Grade of Concrete
Moderate	0.45	340	M25
Severe	0.45	360	M30
Very Severe	0.40	380	M40

Note:

i) All three provisions given in the above table for a particular exposure condition, shall be satisfied.

ii) The term cement for maximum w/c ratio and minimum cement content shown in Table includes all cementitious materials mentioned in Clause 1715.2. The maximum limit of flyash and ground granulated blast furnace slag in the blended cement shall be as specified in IS:1489 (Part 1) and IS:455 respectively.

iii) For plain cement concrete, with or without surface reinforcement, the minimum grade of concrete can be lowered by 5 MPa and maximum water/cement ratio exceeded by 0.05.

Cement content shown in the above table shall be increased by 40 kg/m^3 for use of 12.50 mm nominal size aggregates and decreased by 30 kg/m^3 for use of 40 mm nominal size aggregates.

Table 1700-3 : Requirement of Concrete Exposed to Sulphate Attack

Class	Concentration of Sulphates as SO_3			Type of Cement (Note ii)	Minimum Cement Content, kg/m³	Maximum Water / Cement Ratio	Minimum Grade of Concrete
	In Soils		In Ground Water, g/l				
	Total SO_3, %	SO_3 in 2:1 Water: Soil Extract, g/l					
1)	Traces	< 1.0	< 0.3	-OPC, PPC or PSC	280	0.5	M25
2)	2.0 to 0.5	1.0 to 1.9	0.3 to 1.2	-OPC, PPC or PSC -SRPC	330	0.5	M25
3)	0.5 to 1.0	1.9 to 3.1	1.2 to 2.5	-SRPC, -PPC or PSC	330 350	0.5 0.45	M25 M30
4)	1.0 to 2.0	3.1 to 5.0	2.5 to 5.0	-SRPC	370	0.45	M35
5)	>2.0	>5.0	>5.0	-SRPC with protective coatings	400	0.4	M40

Note: If the requirements of maximum water/cement ratio, minimum grade of concrete and minimum cement content from other durability considerations as given in Table 1700-2 are more stringent than those given in this table, then the former will govern.

OPC: Ordinary Portland Cement, PPC: Portland Pozzolona Cement. PSC: Portland Slag Cement, SRPC: Sulphate Resisting Portland Cement.

The minimum cement content shall be as low as possible but not less than the quantities specified in Table 1700-2 and 1700-3.

The maximum cement content excluding any mineral admixtures (Portland cement component alone) shall not exceed 450 kg/cu.m.

1703.4 Concrete used in any component or structure shall be specified by designation along with prescribed method of design of mix i.e. 'Design Mix' or 'Nominal Mix'. For all items of concrete, only design mix shall be used, except where nominal mix concrete is permitted as per drawing or by the Engineer. Nominal mix may be permitted only for minor bridges and culverts or other incidental construction, where strength requirements are upto M 20 only. Nominal mix may also be permitted for non-structural concrete or for screed below open foundations.

1703.5 If the Contractor so proposes, the Engineer may permit the use of concrete of higher grade than that specified on the drawing, provided the higher grade concrete meets the specifications applicable. The additional cost of such higher grade concrete shall be borne by the Contractor.

1704 PROPORTIONING OF CONCRETE

Prior to the start of construction, the Contractor shall design the mix in case of design mix concrete or propose nominal mix in case of nominal mix concrete, and submit to the Engineer for approval, the proportions of materials, including admixtures to be used. Water-reducing admixtures (including plasticisers or super-plasticisers) may be used at the Contractor's option, subject to the approval of the Engineer.

1704.1 Requirements of Consistency

The mix shall have the consistency which will allow proper placement and compaction in the required position. Every attempt shall be made to obtain uniform consistency. Slump test shall be used to measure consistency of the concrete.

The optimum consistency for various types of structures shall be as indicated in Table 1700-4, or as directed by the Engineer. The slump of concrete shall be checked as per IS:516.

Table 1700-4 : Requirements of Consistency

Type		Slump (mm) (at the Time of Placing of Concrete)
1)	a) Structure with exposed inclined surface requiring low slump concrete to allow proper compaction	25
	b) Plain cement concrete	25
2)	RCC structure with widely spaced reinforcements; e.g. solid columns, piers, abutments, footings, well steining	40 – 50
3)	RCC structure with fair degree of congestion of reinforcement; e.g. pier and abutment caps, box culverts, well curb, well cap, walls with thickness greater than 300 mm	50 – 75
4)	RCC and PSC structure with highly congested reinforcements e.g. deck slab girders, box girders, walls with thickness less than 300 mm	75 – 125
5)	Underwater concreting through tremie e.g. bottom plug, cast in-situ piling	150 – 200

Notwithstanding the optimum consistency indicated against Sl. No. 1 to 3, the situation should be property assessed to arrive at the desired workability with the adjustment of admixture in each case, where the concrete is to be transported through transit mixer and placed using concrete pump. Under these circumstances, the optimum consistency during placement for the items of work of Sl. No. 1 to 3, can be considered ranging from 75 mm to 150 mm. This is, however, subject to satisfying the other essential criteria of strength, durability etc. and approval of the Engineer.

1704.2 Requirements for Design Mixes

1704.2.1 Target Mean Strength

The target mean strength of specimen shall exceed the specified characteristic compressive strength by at least the current margin.

i) The current margin for a concrete mix shall be determined by the Contractor and shall be taken as 1.64 times the standard deviation of sample test results taken from at least 40 separate batches of concrete of nominally similar proportions produced at site by the same plant under similar supervision, over a period exceeding 5 days, but not exceeding 6 months.

ii) Where there is insufficient data to satisfy the above, the current margin for the initial design mix shall be taken as given in Table 1700-5 :

Table 1700-5 : Current Margin for Initial Design Mix

Concrete Grade	Current Margin (MPa)	Target Mean Strength (MPa)
M 15	10	25
M 20	10	30
M 25	11	36
M 30	12	42
M 35	12	47
M 40	12	52
M 45	13	58
M 50	13	63
M 55	14	69
M60	14	74
M 65	15	80
M 70	15	85
M 75	15	90
M 80	15	95
M85	16	101
M90	16	106

The initial current margin given in Table 1700-5 shall be used till sufficient data is available to determine the current margin as per Sub-Clause 1704.2.1(i).

1704.2.2 Trial Mixes

The Contractor shall give notice to the Engineer to enable him to be present at the time of carrying out trial mixes and preliminary testing of the cubes. Prior to commencement of trial mix design, all materials forming constituents of proposed design mix should have been tested and approval obtained in writing from the Engineer. Based on test results of material, draft mix design calculation for all grades of concrete to be used in the works, shall be prepared after taking into account the provisions in the Contract Technical Specifications, Guidelines of IS:10262, IS:SP:23 and IRC:112 and submitted to the Engineer for approval. Prior to commencement of concreting, trial mix design shall be performed for all grades of concrete and trial mix which has been found successful, shall be submitted by the Contractor and approval obtained. During concreting with the approved trial mix design, if source of any constituents is changed, the mix design shall be revised and tested for satisfying the strength requirements.

The initial trial mixes shall be carried out in a laboratory approved by the Engineer. However, Engineer may permit the initial trial mixes to be prepared at the site laboratory of the Contractor, if a full fledged concrete laboratory has been established well before the start of construction, to his entire satisfaction. Sampling and testing procedures shall be in accordance with these Specifications.

When the site laboratory is utilized for preparing initial mix design, the concrete production plant and means of transport employed to make the trial mixes shall be similar to those proposed to be used in the works.

For each trial mix, a set of six cubes shall be made from each of three consecutive batches for purposes of testing. Three cubes from each set of six shall be tested at an age of 28 days and three at an earlier age approved by the Engineer. The cubes shall be made, cured, stored, transported and tested in accordance with these Specifications. The mean strength of the nine cubes at 28 days shall exceed the specified characteristic strength by the current margin minus 3.5 MPa.

1704.2.3 Control of Strength of Design Mixes

a) Adjustment to Mix Proportions

Adjustment to mix proportions arrived at in the trial mixes, shall be made subject to the Engineer's approval, in order to minimize the variability of strength and to maintain the target mean strength. Such adjustments shall not be taken to imply any change in the current margin.

b) Change of Current Margin

When required by the Engineer, the Contractor shall recalculate the current margin in accordance with Clause 1704.2.1. The recalculated

value shall be adopted as directed by the Engineer, and it shall become the current margin for concrete produced thereafter.

c) Additional Trial Mixes

In case any changes are observed in the properties of fresh concrete and/or strength of hardened concrete on the basis of early age tests, additional mixes and tests shall be carried out during production, so as to control and bring the quality of concrete within acceptable limits. In case of any change in the source or properties of materials, the design of mix shall be established afresh.

1704.3 Requirements of Nominal Mix Concrete

Requirements for nominal mix concrete unless otherwise specified shall be as given in **Table 1700-6**.

Table 1700-6 : Requirements for Nominal Mix Concrete

Concrete Grade	Total Quantity of Dry Aggregate by Mass per 50 kg of Cement to be taken as the Sum of Individual Masses of Fine and Coarse Aggregates (kg)	Proportion of Fine to Coarse Aggregate (by Mass)	Maximum Quantity of Water for 50 kg of Cement (Litres)	
			PCC	RCC
M 15	350	Generally 1:2, subject to upper limit 1:1.5 and lower limit of 1:2.5	25	
M 20	250		25	22

1704.4 Additional Requirements

Concrete shall meet any other requirements as specified on the drawing or as directed by the Engineer. The overall limits of deleterious substances in concrete shall be as follows:

a) Total acid soluble chloride content in the concrete mix expressed as chloride ions shall not exceed the following values by mass of cement.

Prestressed concrete	0.10 percent
Reinforced concrete (in severe, very severe or extreme exposure condition)	0.20 percent
Reinforced concrete in moderate exposure condition	0.30 percent

b) The total water soluble sulphate content of the concrete mix expressed as SO_3, shall not exceed 4 percent by mass of cement in the mix.

For concrete made with Portland pozzolona cement, Portland blast furnace slag cement or mineral admixtures, the setting time and rate of gain of strength are different from those for concrete made with OPC alone. Such modified properties shall be taken into account while deciding the de-shuttering time, curing period, early age loading and time of prestressing. Additional cube samples may be required to be taken for verifying the concrete properties.

1704.5 Suitability of Proposed Mix Proportions

The Contractor shall submit the following information for the Engineer's approval :

a) Nature and source of each material

b) Quantities of each material per cubic metre of fully compacted concrete

c) Either of the following :

   i) Appropriate existing data as evidence of satisfactory previous performance for the target mean strength, current margin, consistency and water/cement ratio and any other additional requirement (s) as specified.

   ii) full details of tests on trial mixes.

d) Statement giving the proposed mix proportions for nominal mix concrete

Any change in the source of material or in the mix proportions shall be subject to the Engineer's prior approval.

1704.6 Checking of Mix Proportions and Water/Cement Ratio

In proportioning concrete, the quantity of both cement and aggregate shall be determined by weight. Where the weight of cement per bag as given by the manufacturer is accepted, a reasonable number of bags shall be weighed separately to check the net weight. Where cement is weighed from bulk stock at site and not by bag, it shall be weighed separately from the aggregates. Water shall either be measured by volume in calibrated tanks or weighed. All measuring equipment shall be maintained in a clean and serviceable condition. Their accuracy shall be periodically checked.

The specified water/cement ratio shall always be kept constant and at its correct value. To this end, moisture content in both fine and coarse aggregates shall be determined as frequently as possible, the frequency for a given job being determined by the Engineer according to the weather conditions. The amount of water to be added shall then be adjusted to compensate

for variations in the moisture content. For the determination of moisture content in the aggregates IS:2386 (Part III) shall be referred. Suitable adjustments shall also be made in the weight of aggregates to allow for their variation in weight due to variation in their moisture content.

1704.7 Grading of Aggregates for Pumped Concrete

Materials for pumped concrete shall be batched consistently and uniformly. Maximum size of aggregate shall not exceed one-third of the internal diameter of the pipe.

The grading of aggregates shall be continuous and shall have sufficient ultra fine materials (material finer than 0.25 mm). Proportion of fine aggregates passing through 0.25 mm shall be between 15 and 30 percent and that passing through 0.125 mm sieve shall not be less than 5 percent of the total volume of aggregate. Admixtures to increase workability can be added. When pumping long distances and in hot weather, set-retarding admixtures can be used. Fluid mixes can be pumped satisfactorily after adding plasticisers and super plaslicisers. Suitability of concrete shall be verified by trial mixes and by performing pumping test.

1705 ADMIXTURES

1705.1 Chemical Admixtures

Chemical admixtures such as superplasticisers, or air entraining, water reducing, accelerating and retarding agents for concrete, may be used with the approval of the Engineer.

As the selection of an appropriate concrete admixture is an integral part of the mix design, the manufacturers shall recommend the use of any one of their products only after obtaining complete information of all the actual constituents of concrete as well as methodologies of manufacture, transportation and compaction of concrete proposed to be used in the work. Admixtures/additives conforming to IS:9103 may be used subject to approval of the Engineer. However, admixtures/additives generating hydrogen or nitrogen and containing chlorides, nitrates, sulphides, sulphates or any other material likely to adversely affect the steel or concrete, shall not be permitted.

The general requirements for admixtures are given in Clause 1007 of these Specifications.

Compatibility of the admixtures with the cement and any other pozzolona or hydraulic addition shall be ensured by for avoiding the following problems

i) Requirement of large dosage of superplasticiser for achieving the desired workability,

ii) Excessive retardation of setting,

iii) Excessive entrainment of large air bubbles,

iv) Unusually rapid stiffening of concrete,

v) Rapid loss of slump

vi) Excessive segregation and bleeding.

1705.2 Mineral Admixtures

For use of mineral admixtures, refer Clauses 1714.1 and 1715.2.

1706 SIZE OF COARSE AGGREGATES

The size (maximum nominal) of coarse aggregates for concrete to be used in various components shall be as given in Table 1700-7.

Table 1700-7 : Maximum Nominal Size of Coarse Aggregates

	Components	Maximum Nominal Size of Coarse Aggregate (mm)
I)	RCC well curb	20
ii)	RCC/PCC well steining	40
iii)	Well cap or Pile Cap Solid type piers and abutments	40
iv)	RCC work in girder, slabs wearing coat, kerb, approach slab, hollow piers and abutments, pier/abutment caps, piles	20
v)	PSC Work	20
vi)	Any other item	As specified by the Engineer

Maximum nominal size of aggregates shall also be restricted to the smaller of the following values :

a) 10 mm less than the minimum lateral clear distance between individual reinforcements

b) 10 mm less than the minimum clear cover to the reinforcement

c) One quarter of minimum thickness of member

The proportions of the various individual sizes of aggregates shall be so adjusted that the grading produces the densest mix and the grading curve corresponds to the maximum nominal size adopted for the concrete mix.

1707 EQUIPMENT

Unless specified otherwise, equipment for production, transportation and compaction of concrete shall be as under :

a) Production of Concrete :

i) For overall bridge length of less than 200 m – batch type concrete mixer, diesel or electric operated, with a minimum size of 200 litres automatic water measuring system and integral weigher (hydraulic/pneumatic type).

ii) For overall bridge length of 200 m or more – concrete batching and mixing plant fully automatic, with minimum capacity of 15 cum per hour.

All measuring devices of the equipment shall be maintained in a clean and serviceable condition. Their accuracy shall be checked over the range in use, when set up at each site and thereafter, periodically as directed by the Engineer.

The accuracy of the measuring devices shall fall within the following limits :

Measurement of Cement	:	± 3 percent of the quantity of cement in each batch
Measurement of Water	:	± 3 percent of the quantity of water in each batch
Measurement of Aggregate	:	± 3 percent of the quantity of aggregate in each batch
Measurement of Admixture	:	± 3 percent of the quantity of admixture in each batch

b) Transportation of Concrete:

i) Concrete dumpers minimum 2 tonnes capacity

ii) Powered hoists minimum 0.5 tonne capacity

iii) Chutes

iv) Buckets handled by cranes

v) Transit truck mixer

vi) Concrete pump

vii) Concrete distributor booms

viii) Belt conveyor

ix) Cranes with skips

x) Tremies

c) For Compaction of Concrete :

i)	Internal vibrators	size 25 mm to 70 mm
ii)	Form vibrators	minimum 500 watts
iii)	Screed vibrators	full width of carriageway (upto two lanes)

1708 BATCHING, MIXING, TRANSPORTING, PLACING AND COMPACTION

1708.1 General

Prior to start of concreting, the Contractor shall submit for approval of the Engineer, his programme along with list of equipment proposed to be used by him for batching, mixing, transporting and placing concrete.

1708.2 Batching of Concrete

In batching concrete:

- The quantity of cement, aggregate and mineral admixtures, if used, shall be determined by mass.
- Chemical admixtures, if solid, shall be determined by mass.
- Liquid admixtures may be measured in volume or mass, and
- Water shall be weighed or measured by volume in a calibrated tank.

The concrete shall be sourced from on-site or off-site batching and mixing plants, or from approved Ready Mixed Concrete plants, preferably having quality certification.

Except where supply of properly graded aggregate of uniform quality can be maintained over a period of work, the grading of aggregate should be controlled by obtaining the coarse aggregate in different sizes and blending them in the right proportions when required, the different sizes being stocked in separate stock piles. The materials should be stock piled several hours, preferably a day before use. The grading of coarse and fine aggregate should be checked as frequently as possible to ensure that the specified grading is maintained.

The water/cement ratio shall always be maintained constant at its correct value. To this end, determination of moisture content in both fine and coarse aggregates shall be made as frequently as possible, depending on weather conditions. The amount of added water shall be adjusted to compensate for any observed variations in the moisture content. To allow for the variation in mass of aggregate due to variation in moisture content, suitable adjustment in the mass of aggregate, shall also be made. Accurate control shall be kept on the quantity of mixing water, which when specified, shall not be changed without approval.

1708.3 Mixing Concrete

1708.3.1 Mixing at Site

All concrete shall be machine mixed. In order to ensure uniformity and good quality of concrete the ingredients shall be mixed in a power driven batch mixer with hopper and suitable weigh batching arrangement or in a central mix plant. Hand mixing shall not be permitted. The mixer or the plant shall be at an approved location considering the properties of the mixes and the transportation arrangements available with the Contractor. The mixer or the plant shall be approved by the Engineer.

Mixing shall be continued till materials are uniformly distributed, a uniform colour of the entire mass is obtained and each individual particle of the coarse aggregate shows complete coating of mortar containing its proportionate amount of cement. In no case shall mixing be done for less than 2 minutes. It shall be ensured that the mixers are not loaded above their rated capacities and are operated at a speed recommended by the manufacturer. When mineral admixtures are added at the mixing stage, their thorough and uniform blending with cement shall be ensured, if necessary by longer mixing time. The addition of water after the completion of the initial mixing operation, shall not be permitted.

Mixers which have been out of use for more than 30 minutes shall be thoroughly cleaned before putting in a new batch and also before changing from one type of cement to another.

1708.3.2 Ready Mix Concrete

Use of ready mix concrete proportioned and mixed off the project site and delivered to site in a freshly mixed and unhardened state conforming to IS:4926, shall be allowed with the approval of the Engineer.

1708.4 Transporting Concrete

Mixed concrete shall be transported from the place of mixing to the place of final deposit as rapidly as possible by methods which will prevent the segregation or loss of the ingredients. The method of transporting or placing of concrete shall be approved by the Engineer. Concrete shall be transported and placed as near as practicable to its final position so that no contamination, segregation or loss of its constituents materials take place.

Concrete may be transported by transit mixers or properly designed buckets or by pumping. Transit mixers or other hauling equipment when used should be equipped with the means of discharge of concrete without segregation. During hot or cold weather, concrete shall be transported in deep containers. Other suitable methods to be reduce the loss of water by evaporation in hot weather and heat loss in cold weather may also be adopted.

When concrete is conveyed by chute, the plant shall be of such size and design as to ensure practically continuous flow. Slope of the chute shall be so adjusted that the concrete flows without excessive quantity of water and without any segregation of its ingredients. The delivery end of the chute shall be as close as possible to the point of deposit. The chute shall be thoroughly flushed with water before and after each working period and the water used for this purpose shall be discharged outside the formwork.

In case concrete is to be transported by pumping, the fresh concrete should have adequate fluidity and cohesiveness to be pumpable. Proper concrete mix proportioning and initial trials should ensure this. The conduit shall be primed by pumping a batch of mortar through the line to lubricate it. Once the pumping is started, it shall not be interrupted, as concrete standing idle in the line is liable to cause plug. The operator shall ensure that some concrete is always there in the pump's receiving hopper during operation. The lines shall always be maintained clean and free of dents.

Pipelines from the pump to the placing area shall be laid with minimum bends. For large quantity placements, standby pumps shall be available. Suitable air release valves, shutoff valves etc. shall be provided as per site requirements. The pumping of priming mix i.e. rich mix of creamy consistency, to lubricate the concrete pump and pipelines, shall precede the pumping of concrete. Continuous pumping shall be done to the extent possible. After concreting, the pipelines and accessories shall be cleaned immediately. The pipes for pumping shall not be made of material which has adverse effect on concrete. Aluminium alloy pipelines shall not be used.

1708.5 Placing of Concrete

All formwork and reinforcement contained in it shall be cleaned and made free from standing water, dust, snow or ice immediately before placing of concrete.

No concrete shall be placed in any part of the structure until the approval of the Engineer has been obtained. If concreting is not started within 24 hours of the approval being given, the approval shall have to be obtained again from the Engineer. Concreting shall proceed continuously over the area between the construction joints. Fresh concrete shall not be placed against concrete which has been in position for more than 30 minutes, unless a proper construction joint is formed.

The concrete shall be deposited as nearly as practicable in its original position to avoid re-handling. Methods of placing should be such as to preclude segregation. Care should be taken to avoid displacement of reinforcement or movement of formwork. To achieve this, concrete should be lowered vertically in the form and horizontal movement of concrete inside the forms should, as far as practicable, be minimised.

The concrete shall be placed and compacted before its initial setting so that it is amenable to compaction by vibration. The workability of concrete at the time of placement shall be adequate for the compaction equipment to be used. If there is considerable time gap between mixing and placing of concrete, as in the case of ready mixed concrete plants or off-site batching and mixing plants, concrete mix shall be designed to have appropriately higher workability at the time of discharge from the mixer, in order to compensate the loss of workability during transit. This is generally achieved by suitable chemical admixtures. Keeping these considerations in view, the general requirement for ready mixed concrete plants or off-site batching and mixing plants, is that concrete shall be discharged from the truck mixer within two hours of the time of loading. A longer period may be permitted if suitable retarding admixtures are used.

In wall forms, drop chutes attached to hoppers at the top should preferably be used to lower concrete to the bottom of the form. As a general guidance, the permissible free fall of concrete may not exceed 1.5 metres and under no circumstances shall it be more than 2 metres. When free fall of larger height is involved, self compacting concrete having adequate fluidity, cohesiveness and viscosity and which uniformly and completely fills every corner of the formwork by its own weight without segregation, shall be used.

Except where otherwise agreed to by the Engineer, concrete shall be deposited in horizontal layers to a compacted depth of not more than 450 mm when internal vibrators are used and not more than 300 mm in all other cases.

Concrete when deposited shall have temperature of not less than 5°C and preferably not more than 30°C and in no case more than 40°C. In case of site mixing, fresh concrete shall be placed and compacted in its final position within 30 minutes of its discharge from the mixer. When the concrete is carried in properly designed agitator operating continuously, the concrete shall be placed and compacted within 1 hour of the addition of cement to the mix and within 30 minutes of its discharge from the agitator. It may be necessary to add retarding admixtures to concrete, if trials show that the periods indicated above are unacceptable. In all such matters, the Engineer's decision shall be final.

1708.6 Compaction of Concrete

Concrete shall be thoroughly compacted by vibration or other means during placing and worked around the reinforcement, tendons or duct formers, embedded fixtures and into corners of the formwork to produce a dense homogeneous void-free mass having the required surface finish. When vibrators are used, vibration shall be done continuously during the placing of each batch of concrete until the expulsion of air has practically ceased and in a manner that does not promote segregation. Over-vibration shall be avoided to minimize the risk of forming a weak surface layer. When external vibrators are used, the design of formwork and disposition of vibrator shall be such as to ensure efficient compaction and to avoid surface blemishes. Vibrations shall not be applied through reinforcement and where

vibrators of immersion type are used, contact with reinforcement and all inserts like ducts etc., shall be avoided.

When internal vibrators are used, they shall be inserted vertically to the full depth of the layer being placed and ordinarily shall penetrate the layer below for a few centimetres. The vibrator should be kept in place until air bubbles cease escaping from the surface and then withdrawn slowly to ensure that no hole is left in the concrete, care being taken to see that it remains in continued operation while being withdrawn. The internal vibrators shall be inserted in an orderly manner and the distance between insertions should be about one and half times the radius of the area visibly affected by vibration. Additional vibrators in serviceable condition shall be kept at site so that they can be used in the event of breakdown.

Mechanical vibrators used shall comply with IS:2502, IS:2506, IS:2514 and IS:4656.

1709 CONSTRUCTION JOINTS

Construction joints shall be avoided as far as possible. In no case shall the locations of such joints be changed or increased from those shown on the drawings except with the express approval of the Engineer.

Joints should be positioned where they are readily accessible for preparation and concreting. Construction joints should be positioned to minimize the effects of the discontinuity of the durability, structural integrity and appearance of the structure. As far as possible, joints should be provided in non-aggressive zones, but if joints in aggressive zones cannot be avoided, they should be sealed. Joints should be located away from the regions of maximum stress caused by loading; particularly where shear and bond stresses are high.

In beams and slabs joints should not be near the supports. Construction joints between slabs and ribs in composite beams, shall be avoided. For box girders, there shall be no construction joint between the soffit and webs.

Joints should be either vertical or horizontal. For a vertical construction joint, the lifts of concrete shall finish level or at right angles to the axis of the member. Concreting shall be continued right up to the joint.

Before resuming work at a construction joint when concrete has not yet fully hardened, all laitance shall be removed thoroughly. The surface shall be roughened, taking care to avoid dislodgement of coarse aggregates. Concrete shall be brushed with a stiff brush soon after casting, while the concrete has only slightly stiffened. If the concrete has partially hardened, it may be treated by wire brushing or with a high pressure water jet, followed by drying with an air jet, immediately before the new concrete is placed. Fully hardened concrete shall be treated with mechanical hand tools or grit blasting, taking care not to split or crack aggregate particles. The practice of first placing a layer of mortar or grout when concreting joints, shall

be avoided. The old surface shall be soaked with water, without leaving puddles, immediately before starting concreting. The new concrete shall be thoroughly compacted against it.

Where there is likely to be a delay before placing the next concrete lift, protruding reinforcement shall be protected. In all cases, where construction joints are made, the joint surface shall not be contaminated with release agents, dust, or sprayed curing membrane and reinforcement shall be firmly fixed in position at the correct cover.

The sequence of concreting, striking of forms and positioning of construction joints for every individual structure, shall be decided well in advance of the commencement of work.

1710 CONCRETING UNDER WATER

When it is necessary to deposit concrete under water, the methods, equipment, materials and proportions of mix to be used, shall be got approved from the Engineer before any work is started.

Concrete shall not be placed in water having a temperature below 5°C. The temperature of the concrete, when deposited, shall not be less than 16°C, nor more than 30°C.

Coffer dams or forms shall be sufficiently tight to ensure still water conditions, if practicable, and in any case to reduce the flow of water to less than 3 m per minute through the space into which concrete is to be deposited. Coffer dams or forms in still water shall be sufficiently tight to prevent loss of mortar through the joints in the walls. Pumping shall not be done while concrete is being placed, or until 24 hours thereafter. To minimise the formation of laitance, care shall be exercised not to disturb the concrete as far as possible while it is being deposited.

All under water concreting shall be carried out by tremie method only. The number and spacing of the tremies should be worked out to ensure proper concreting. However, it is necessary to have a minimum number of 2 tremies for any concreting operation, so that even if one of the tremies goes out of commission during concreting, the other one can be used to complete the work. The tremie concreting when started, should continue without interruption for the full height of the member being concreted. The capacity of the concrete production and placement equipment should be sufficient to enable the underwater concreting to be completed uninterrupted within the stipulated time.

The top section of the tremie shall have a hopper large enough to hold one full batch of the mix or the entire contents of the transporting bucket, as the case may be. The tremie pipe shall not be less than 200 mm in diameter and shall be large enough to allow a free flow of concrete and strong enough to withstand the external pressure of the water in which it is suspended, even if a partial vacuum develops inside the pipe. Preferably, flanged steel pipe of adequate strength shall be used. A separate lifting device shall be provided for each

tremie pipe with its hopper at the upper end. Unless the lower end of the pipe is equipped with an approved automatic check valve, the upper end of the pipe shall be plugged with a wadding of gunny sacking or other approved material before delivering the concrete to the tremie pipe through the hopper, so that when the concrete is forced down from the hopper to the pipe, it will force the plug (and along with it any water in the pipe) down the pipe and out of the bottom end, thus establishing a continuous stream of concrete. It will be necessary to raise the tremie slowly in order to allow a uniform flow of concrete. At all times after placing of concrete is started and until all the required quantity has been placed, the lower end of the tremie pipe shall be kept below the surface of the plastic concrete and shall not be taken out of concrete. This will cause the concrete to build up from below instead of flowing out over the surface and thus avoid formation of layers of laitance. It is advisable to use retarders or suitable superplasticizers to retard the setting time of concrete, which shall be established before the commencement of work.

1711 CONCRETING IN EXTREME WEATHER

1711.1 Concreting in Cold Weather

Where concrete is to be deposited at or near freezing temperature, precautions shall be taken to ensure that at the time of placing, it has a temperature of not less than 5°C and that the temperature shall be maintained above 4°C until the concrete has hardened. When necessary, concrete ingredients shall be heated before mixing but cement shall not be heated artificially other than by the heat transmitted to it from other ingredients of the concrete. Stock-piled aggregate may be heated by the use of dry heat or steam. Aggregates shall not be heated directly by gas or on sheet metal over fire. In general, the temperature of aggregates or water shall not exceed 65°C. Salt or other chemicals shall not be used for the prevention of freezing. No frozen material or materials containing ice shall be used. All concrete damaged by frost shall be removed. Concrete exposed to freezing weather shall have entrained air and the water content of the mix shall not exceed 30 litres per 50 kg of cement. To counter slower setting of concrete, accelerators can be used with the approval of the Engineer. However, accelerators containing chloride shall not be used.

1711.2 Concreting in Hot Weather

When depositing concrete in hot weather, precautions shall be taken so that the temperature of wet concrete does not exceed 30°C while placing. This shall be achieved by using chilled mixing water, using crushed ice as a part of mixing water, shading stock piles of aggregates from direct rays of the sun, sprinkling the stock piles of coarse aggregate with water to keep them moist, limiting temperature of cement below 30°C at the time of use, starting curing before concrete dries out and restricting time of concreting as far as possible to early mornings and late evenings. When ice is used to cool mixing water, it will be considered as part of the water in design mix. Under no circumstances shall the mixing operation be considered complete until all ice in the mixing drum has melted. The Contractor will be required to state

his methodology for the Engineer's approval when temperatures of concrete are likely to exceed 30°C during the work.

1712 PROTECTION AND CURING

1712.1 General

Concreting operations shall not commence until adequate arrangements for concrete curing have been made by the Contractor. Curing and protection of concrete shall start immediately after compaction of the concrete.

The concrete shall be protected from:

a) Premature drying out particularly by solar radiation and wind

b) High internal thermal gradients

c) Leaching out by rain and flowing water

d) Rapid cooling during the first few days after placing

e) Low temperature or frost

f) Vibration and impact which may disrupt the concrete and interfere with its bond to the reinforcement.

g) Vibration caused by traffic including construction traffic.

Concrete shall be protected, without allowing ingress of external water, by means of wet (not dripping) gunny bags, hessian etc. Once the concrete has attained some degree of hardening (approximate 12 hrs after mixing), moist curing shall commence and be continued through the requisite period. Where members are of considerable size and length, with high cement content, accelerated curing methods may be applied, as approved by the Engineer.

1712.2 Water Curing

Water for curing shall be as specified in **Section 1000** of these specifications.

Sea water shall not be used for curing. Sea water shall not come into contact with concrete members before they have attained adequate strength.

The concrete should be kept constantly wet by ponding or covering or use of sprinklers/ perforated pipes for a minimum period of 14 days after concreting, except in the case of concrete with rapid hardening cement, where it can be reduced to 5 days. Water should be applied on surfaces after the final set. Curing through watering shall not be done on green concrete. On formed surfaces, curing shall start immediately after the forms are stripped. The concrete shall be kept constantly wet with a layer of sacking, canvas, hessian or similar absorbent material.

1712.3 Steam Curing

Where steam curing is adopted, it shall be ensured that it is done in suitable enclosure to contain the live steam in order to minimize moisture and heat losses. The initial application of the steam shall be after about four hours of placement of concrete to allow the initial set of the concrete to take place.

Where retarders are used, the waiting period before application of the steam shall be increased to about six hours.

The steam shall be at 100 percent relative humidity to prevent loss of moisture and to provide excess moisture for proper hydration of the cement. The application of steam shall not be directly on the concrete. Steam curing is applied in enclosures or tunnels through which concrete members are transported on a conveying system. Alternatively, portable enclosures or plastic covers are placed over precast members and steam is supplied to the enclosures. The rate of increase or decrease of temperature should not be more than 10°C to 20°C per hour and the maximum temperature shall be about 70°C. The maximum temperature shall be maintained until the concrete has attained the desired strength required at the end of steam curing period and shall be decided by prior trials. When steam curing is discontinued, the air temperature shall not drop at a rate exceeding 10°C per hour, until a temperature of about 10°C above the ambient temperature outside has been reached. Steam curing of concrete shall be followed by water curing for at least 7 days. The concrete shall not be exposed to temperatures below freezing for at least six days after curing.

1712.4 Curing Compound

Membrane forming curing compounds consisting of waxes, resins, chlorinated rubbers etc. may be permitted by the Engineer in special circumstances. Curing compounds shall not be used on any surface which requires further finishing to be applied. All construction joints shall be moist cured and no curing compound shall be permitted in locations where concrete surfaces are required to be bonded together.

Liquid membrane forming compounds shall conform to ASTMC 309 and the curing efficiency shall be as per ASTMC 156.

Curing compounds shall be continuously agitated during use. All concrete cured by this method shall receive two applications of the curing compound. The first coat shall be applied immediately after acceptance of concrete finish. If the surface is dry, the concrete shall be saturated with water and curing compound applied as soon as the surface film of water disappears. The second application shall be made after the first application has set. Placement in more than two coats may be required to prevent streaking. The membrane formed shall be stripped off after 14 days, when curing is complete. Impermeable membranes, such as sheet materials for curing concrete conforming to ASTM C 171 or polyethylene sheeting

covering closely the concrete surface, may also be used to provide effective barrier against evaporation.

1713 FINISHING

Immediately after the removal of forms, exposed bars or bolts, if any, shall be cut inside the concrete member to a depth of at least 50 mm below the surface of the concrete and the resulting holes filled with cement mortar. All fins caused by form joints, all cavities produced by the removal of form ties and all other holes and depressions, honeycomb spots, broken edges or corners, and other defects, shall be thoroughly cleaned, saturated with water and carefully pointed and rendered true with mortar. The mortar shall be of cement and fine aggregate mixed in the proportions used in the grade of concrete that is being finished and of as dry a consistency as possible. Considerable pressure shall be applied in filling and pointing to ensure thorough filling in all voids. Surfaces which have been pointed shall be kept moist for a period of twenty four hours. Special pre-packaged proprietary mortars shall be used where appropriate or where specified in the drawing.

All construction and expansion joints in the completed work shall be left carefully tooled and free from any mortar and concrete. Expansion joint filler shall be left exposed for its full length with clean and true edges.

Immediately on removal of forms, the concrete work shall be examined by the Engineer before any defects are made good. The work that has sagged or contains honeycombing to an extent detrimental to structural safety or architectural appearance of the member, shall be rejected. Surface defects of a minor nature may be accepted. On acceptance of such work, the same shall be rectified as directed by the Engineer.

1714 CONCRETE WITH BLENDED CEMENTS OR MINERAL ADMIXTURES

1714.1 Production of Concrete

In order to improve the durability of the concrete, use of blended cement or blending of mineral admixtures, is permitted. The maximum limit of flyash and ground granulated blast furnace slag in concrete, shall be as specified in Clause 1715.2. Blending at site shall be permitted only through a specific facility with complete automated process control to achieve the specified design quality or through RMC plants with similar facility.

1714.2 Modified Properties

For concrete made with Portland Pozzolona Cement, Portland Blast furnace slag cement or mineral admixtures, the setting time and rate of gain of strength are different from those of concrete made with OPC alone. Cognizance of such modified properties shall be taken

in deciding de-shuttering time, initial time of prestressing, curing period and for early age loading.

1714.3 Compatibility of Chemical Admixtures

Compatibility of chemical admixtures and superplasticizers with Portland Pozzolona cement, Portland blast furnace slag cement and mineral admixtures shall be ensured by trials outlined in **Clause 1705**.

1714.4 Additional Tests

In addition to the strength tests prescribed in other Sections of these Specifications, the following additional tests are required to be carried out from considerations of durability.

i) Rapid Chloride Ion Permissibility Test

Rapid Chloride Ion permeability test on as per ASTM C 1202 at 56 days for extreme, very severe and severe conditions of exposure. The permissible value of Chloride-Ion permeability for extreme condition 800 Coulombs very severe condition 1200 coulombs and severe exposure condition 1500 coulombs.

ii) Water Permeability Test

Water permeability test as per DIN: 1048 Part 5-1991 shall be carried out as described in Clause 1717.2.5.5.

1715 HIGH PERFORMANCE CONCRETE

1715.1 General

High Performance Concrete shall be used where special performance requirements of high strength, high early strength, high workability, low permeability and high durability for severe service environments, are required. Production and use of such concrete in the field shall be carried out with high degree of uniformity between batches and very stringent quality control.

1715.2 Materials

Cement, mineral admixtures, chemical admixtures, aggregates and water shall conform to **Section 1000** of these Specifications and this Section.

Flyash when used, shall neither be less than 20 percent nor shall be greater than 35 percent of the total by mass of ordinary Portland cement and flyash and shall conform to grade-1 of IS:3812.

Ground granulated blast furnace (GGBS) slag when used, shall neither be less than 50 percent nor greater than 70 percent of the total mass of ordinary Portland cement and GGBS and shall conform to IS:12089.

Silica fume conforming to IS:15388 shall be used.

The cement content of concrete inclusive of any mineral admixtures shall not be less than 380 kg/m^3. The cement content excluding any mineral admixtures (Portland cement content alone) shall not exceed 450 kg/m^3. The water/cement (cement plus all cementitious materials) ratio should generally not exceed 0.33 but in no case shall be more than 0.40.

1715.3 Compatibility of Admixtures

Compatibility of the superplasticiser and admixtures with the cement and any other Pozzolanic or hydraulic dilutes shall be ensured by trials as outlined under Clause 1705.

1715.4 Characteristic Strength and Target Mean Strength

Characteristic strength and the initial target mean strength of concrete, shall be as given in **Table 1700-8**.

The target mean strength shall be calculated as per Clause 1704.2 after obtaining data on standard deviation from sufficient samples.

Table 1700-8 : Characteristic Compressive Strength and Target Mean Strength

Grade Designation	Specified Characteristic Compressive Strength at 28 days (MPa)	Target Mean Strength (MPa)
M 40	40	52
M 45	45	58
M 50	50	63
M 55	55	69
M 60	60	74
M 65	65	80
M 70	70	85
M 75	75	90
M 80	80	95
M85	85	101
M90	90	106

1715.5 Workability and Other Requirements

Workability, concrete mix design, field trial mixes, chloride and sulphate contents shall be as laid down in other Sections of these Specifications.

1715.6 Mixing of Concrete

The concreting plant and means of transportation employed to make trial mixes and to transport them to representative distances shall be similar to the corresponding plant and transport to be used in the works. The optimum sequence of mixing of ingredients shall be established by trials. Mixing time may be longer than in normal grade concrete mixes.

The temperature of concrete at the time of placement shall not exceed 25°C. The temperature of concrete at the mixing stage should be lower, to allow for rise in temperature during transport. When considerable distance of transport is involved, particular attention should be paid to ensure retention of slump as targeted for placement.

1715.7 Prototype Testing

Mock-up trials or prototype testing may be carried out to ensure that the concrete can be satisfactorily placed and compacted, taking into account the location of placement and provision of reinforcement, and required adjustments made in concrete mix design and/or detailing of reinforcement.

1715.8 Curing of Concrete

High performance concrete containing silica fume is more cohesive than normal mixes hence, there is a little or no bleeding and no bleed water to rise to the surface to offset water loss due to evaporation. Plastic shrinkage cracking is possible, if curing is not proper. Initial curing should commence soon after initial setting of concrete. Concrete should be covered with moist covers, opaque colour plastic sheets or suitable curing compound. Final moist curing should commence after final setting of concrete and continue for at least 14 days.

1715.9 Additional Tests for Concrete

Apart from the strength tests prescribed in other Sections of these Specifications, the additional tests as specified under Clause 1714.3, shall also be carried out.

1716 TOLERANCES

Tolerances for dimensions/shape of various components shall be as indicated in these Specifications or shown on the drawings or as directed by the Engineer.

1717 TESTS AND STANDARDS OF ACCEPTANCE

1717.1 Concrete shall conform to the surface finish and tolerance as prescribed in these Specifications for respective components.

1717.2 Random sampling and lot by lot acceptance inspection, shall be made for the 28 days cube strength of concrete.

1717.3 Concrete under acceptance, shall be notionally divided into lots for the purpose of sampling before commencement of work. The basis of delimitation of lots shall be as follows:

i) No individual lot shall be more than 30 cu.m in volume

ii) Different grades of mixes of concrete shall be divided into separate lots.

iii) Concrete of a lot shall be used in the same identifiable component of the bridge.

1717.4 Sampling and Testing

Concrete for preparing 3 test cubes shall be taken from a batch of concrete at point of delivery for construction, according to procedure laid down in IS:1199.

A random sampling procedure shall be adopted which ensures that each of the concrete batches forming the lot under acceptance inspection has equal chance of being chosen for taking cubes.

150 mm cubes shall be made, cured and tested at the age of 28 days for compressive strength in accordance with IS:516. The 28 day test strength result for each cube shall form an item of the sample. Tests at other age shall also be performed, if specified.

Where automated batching plant/Ready Mixed Concrete Plant is located away from the place of use and the time gap between production and placement is more than the initial setting time or where any ingredients are added subsequent to mixing, separate sets of samples shall be collected and tested at batching plant and at location of placement. The results shall be compared and used to make suitable adjustment at batching plants so that properties of concrete at placement are as per the requirements.

1717.5 Test Specimen and Sample Strength

Three test specimens shall be made from each sample for testing at 28 days. Additional cubes may be required for various purposes such as to determine the strength of concrete at 7 days or for any other purpose.

The test strength of the sample shall be the average of the strength of 3 cubes. The individual variation should not be more than ±15 percent of the average. If variation is more, the test results of the sample are invalid.

1717.6 Frequency

The minimum frequency of sampling of concrete of each grade shall be in accordance with Table 1700-9.

Table 1700-9 : Minimum Frequency of Sampling

Quantity of Concrete in Work, m^3	No. of Samples
1 – 5	1
6 – 15	2
16 – 30	3
31 – 50	4
51 and above	4 plus one additional sample for each additional 50 m^3 or part thereof

At least one sample shall be taken from each shift of work.

1717.7 Acceptance criteria

1717.7.1 Compressive Strength

1) **Cubes**

The concrete shall be taken as having the specified compressive strength when both the following conditions are met:

a) The mean strength determined from any group of four consecutive non-overlapping samples exceeds the specified characteristic compressive strength by 3 MPa.

b) Strength of any sample is not less than the specified characteristic compressive strength minus 3 MPa.

The quantity of concrete represented by the test results include the batches from which the first and last samples were taken, together with all intervening batches.

2) **Cores**

When the concrete does not satisfy both the conditions given in (1) above, representative cores shall be extracted from the hardened concrete for compression test in accordance with the method described in IS:1199 and tested to establish whether the concrete satisfies the requirement of compressive strength.

Evaluation of compressive strength by taking cores may also be done in case of doubt regarding the grade of concrete used either due to poor workmanship or based on results of cube strength tests.

The locations from which core samples are to be taken and their number shall be decided so as to be representative of the whole of the concrete under consideration. However, in no case shall fewer than three cores be tested. Cores shall be prepared and tested as described in

IS:516. Concrete in the member represented by a core test shall be considered acceptable if the average equivalent cube strength of the cores is equal to at least 85 percent of the cube strength of the grade of concrete specified for the corresponding age and no individual core has strength less than 75 percent of the specified strength.

1717.7.2 Chloride and Sulphate Content

The total chloride and sulphuric anhydride (SO_3) content of all the constituents of concrete as a percentage of mass of cement in the mix, shall not exceed the values given in this Section.

1717.7.3 Density of Fresh Concrete

Where minimum density of fresh concrete is specified, the mean of any four consecutive non-overlapping samples shall not be less than the specified value and any individual sample result shall not be less than 97.5 percent of the specified value.

1717.7.4 Density of Hardened Concrete

Where minimum density of hardened concrete is specified, the mean of any four consecutive non-overlapping samples shall not be less than the specified value and any individual sample result shall not be less than 97.5 percent of the specified value.

1717.7.5 Permeability Test

Water permeability test as per DIN:1048 Part 5–1991 shall be carried out as described below :

i) A cylindrical test specimen 150 mm dia and 160 mm high shall be prepared.

ii) After 28 days of curing, the test will be conducted between 28 and 35 days. The test specimen shall be fitted in a machine such that specimen can be subjected to a water pressure of up to 7 bars. A typical machine is shown in Appendix-1700/1.

iii) The concrete specimen shall be subjected to a water pressure of 0.5 N/mm^2 from the top for a period of 3 days. The pressure shall be maintained constant throughout the test period. If the water penetrates through to the underside of the specimen, the test may be terminated and the specimen rejected as failed.

iv) After 3 days, the pressure shall be released and the sample shall be taken out. The specimen shall be split in the middle by compression applied on two round bars on opposite sides above and below.

v) When the split faces show signs of drying (after 5 to 10 minutes), the maximum depth of penetration in the direction of height shall be measured with the scale and extent of water penetration established.

vi) The mean of maximum depth of penetration obtained from three specimens thus tested, shall be taken as the test result and it shall not exceed 25 mm.

1717.7.6 If the concrete is not able to meet any of the standards of acceptance as prescribed, the effect of such deficiency on the structure shall be investigated by the Contractor as directed by the Engineer. The Engineer may accept the concrete as sub-standard work. Any additional work required by the Engineer for such acceptance, shall be carried out by the Contractor at his cost. In case the concrete is not found to be acceptable even after investigation, the Contractor shall remove the rejected concrete forthwith.

1717.7.7 When durability of concrete is desired the rapid chloride ion permeability test as stated under Clause 1714.3.1 shall also be performed in addition to above tests.

1718 MEASUREMENTS FOR PAYMENT

Structural concrete shall be measured in cubic metres. In reinforced or prestressed concrete, the volume occupied by reinforcement or prestressing cables and sheathing shall not be deducted. The slab shall be measured as running continuously through and the beam as the portion below the slab.

1719 RATE

The contract unit rate for structural concrete shall cover costs of all materials, labour, tools, plant and equipment required for mixing, transporting and placing in position, vibrating and compacting, finishing and curing as per this Section or as directed by the Engineer, including all incidental expenses, sampling and testing, quality assurance and supervision. Unless mentioned separately as an item in the contract, the contract unit rate for concrete shall also include the cost of providing, fixing and removing formwork required for concrete work as per **Section 1500** of these Specifications.

If the concrete is found to be acceptable by the Engineer as sub-standard work, the Contractor shall be subjected to reduction in his contact unit rate. For deficiency in compressive strength of concrete when accepted by the Engineer, the reduction in rate shall be applied as under:

$$\text{Percentage reduction in rate} = \frac{\text{Design Strength} - \text{Observed Strength}}{\text{Design Strength}} \times 100$$

1800

PRESTRESSING

1801 DESCRIPTION

The work shall consist of imparting prestress to structural concrete members by stressing of wires/strands/tendons/cables with jacks of required capacity and holding them between appropriately designed anchorages fixed internally or externally to the members.

1802 GENERAL

The work shall be carried out in accordance with the drawings and these Specifications or as approved by the Engineer.

Structural concrete and untensioned steel for the production of prestressed concrete members shall conform to the requirements of Section 1700 and Section 1600 respectively, of these Specifications, unless specifically modified by requirements set forth in this Section.

1803 MATERIALS

1803.1 All materials shall conform to **Section 1000** of these Specifications.

1803.2 Sheathing

1803.2.1 General

The sheathing ducts shall be of the spiral corrugated type either in mild steel or HDPE or in PP for internal tendons. They shall be in as long lengths as practicable from considerations of handling and transportation without getting damaged.

External tendons shall be housed in either High Density Poly-Ethylene (HDPE) sheaths or metallic steel sheaths (plain or with protective coatings), which have smooth internal surfaces.

1803.2.2 M.S. Sheathing Ducts

The material shall be Cold Rolled Cold Annealed (CRCA) Mild Steel conforming to IS:513 intended for mechanical treatment and surface refining but not for quench hardening or tempering.

The material shall be clean and free from rust and normally be bright finished. However, where specified, as in case of use in aggressive environment, galvanized or lead-coated mild steel strips shall be used.

The sheathing shall conform to the requirements specified in Table 1800-1 and Appendix 1800/1. All the joints of sheathing shall be water tight and conform to provisions contained in Clause 1804.6.

Table 1800-1 : Details of Ducts

No. of Strands/ Dia in mm	Diameter of Duct in mm		Thickness of MS Sheathing in mm	Thickness of HDPE Duct in mm
	Metallic	HDPE		
6/13	50	50	0.3	2.0
12/13	75	75	0.4	2.5
19/13	85	85	0.4	2.5
27/13	100	100	0.5	3.0
12/15	85	85	0.4	2.5
19/15	100	100	0.5	3.0
27/15	125	130	0.5	4.0

1803.2.3 Corrugated HDPE Sheathing Ducts

The material for the ducts shall be high density polyethylene or polypropylene with more than 2 percent carbon black to provide resistance to ultraviolet degradation. The ducts shall be corrugated on both sides. All tests on raw materials and tests to be conducted on the finished product, shall be in accordance with *fib* Technical Report Bulletin 7 "Corrugated plastic ducts for internal bonded post tensioning".

Each batch of the HDPE ducts supplied to the site shall be accompanied by the supplier's certificate for properties of the raw materials which shall comply with the Technical report Bulletin 7. In addition the shore hardness for D-3 sec value shall be 60±5. For the approval of the finished product, the tests mentioned in the Appendix A1 to A9 of *fib* Technical Report Bulletin 7, shall be conducted at the reputed institutions or at the manufacturer's laboratories. Results shall comply with the provisions of the *fib* Technical report Bulletin 7, except for the wear resistance, minimum bending radius and bond length test which are modified as follows:

a) Wear resistance test: The wear resistance of the duct i.e. the minimum residual wall thickness after loss, shall not be less than 1.5 mm for ducts up to 85 mm in diameter and not less than 2 mm for ducts greater than 85 mm in diameter.

b) Minimum bending resistance: The test apparatus shall be identical to the wear test apparatus with the same clamping force. However sample shall not be moved but shall be as held in position for a period of 7 days. The residual wall thickness shall be as mentioned in (a) above.

c) Bond length test: The ducts shall transmit full tendon strength from the tendon to the surrounding concrete over a length of not grater then 40 times duct diameter.

Each supply of the ducts shall be accompanied by test report of the finished product also. The test certificates issued by the institutes will be valid for a period of two years.

1803.2.4 Diameter and Thickness of Sheathing Ducts

The internal diameter and thickness of sheathing shall be as shown in the drawing or as indicated in Table 1800-1, whichever is greater:

Where prestressing tendons are required to be threaded after concreting, the internal diameter of sheathing shall be about 5 mm larger than required above for spans more than 30 m. In severe environment, cables shall be threaded after concreting. In such cases a temporary tendon shall be inserted in the sheathing or the sheathing shall be stiffened by other suitable method during concreting.

1803.3 Anchorages

1803.3.1 Prestressing accessories like jacks, anchorages, wedges, block plates, etc. shall be procured from authorized manufacturers only. Anchorages shall conform to "Recommendations for acceptance and application of prestressing systems" published by FIB. The prestressing accessories shall be subjected to an acceptance test prior to their actual use on the work. Test certificates from a laboratory fully equipped to carry out the tests shall be furnished to the Engineer. Such test certificates shall not be more than 12 months old at the time of making the proposal for adoption of a particular system for the project.

No damaged anchorages shall be used. Steel parts shall be protected from corrosion at all times. Threaded parts shall be protected by greased wrappings and tapped holes shall be protected by suitable plugs until used. The anchorage components shall be kept free from mortar and loose rust and any other deleterious coating.

1802.3.2 Swages of prestressing strand and button-heads of prestressing wire, where provided shall develop a strength of at least 95 percent of the specified breaking load of the strand or wire as the case may be. Where swaging/button-heading is envisaged, the Contractor shall furnish details of his methodology and obtain approval of the Engineer, prior to taking up the work.

1802.3.3 Untensioned steel reinforcements, around anchorages shall conform to the details of prestressing system and as shown on the drawing.

1803.4 Couplers

Couplers or other similar fixtures used in conjunction with the prestressing strands or bars, shall have an ultimate tensile strength of not less than the strengths of the individual strands or bars being joined and shall also meet the requirements of individual anchorages.

1804 TESTING OF PRESTRESSING STEEL AND ANCHORAGES

All materials specified for testing shall be furnished free of cost by the Contractor and shall be delivered in time for tests to be made, well in advance of anticipated time of use.

All wires, strands or bars to be shipped to the site, shall be assigned a lot number and tagged for identification purposes. Anchorage assemblies to be shipped shall also be similarly identified.

All samples submitted shall be representative of the lot to be furnished and in the case of wire or strand, shall be taken from the same master roll. The Contractor shall furnish samples of at least 5 m length selected from each lot for testing. Also, two anchorage assemblies, complete with distribution plates of each size or type to be used, shall be furnished along with short lengths of strands as required.

1805 WORKMANSHIP

1805.1 Cleaning

Tendons shall be free from loose rust, oil, grease, tar, paint, mud or any other deleterious substance.

Cleaning of the steel may be carried out by immersing in suitable solvent solutions, wire brushing or passing through a pressure box containing carborundum powder. However, the tendons shall not be brought to a polished condition.

1805.2 Straightening

High tensile steel wire and strand shall be supplied in coils of sufficiently large diameter, such that tendons shall retain their physical properties and shall be straight as they unwind from the coil. Tendons of any type that are damaged, kinked or bent shall not be used.

The packing of prestressing wire/strand shall be removed only just prior to forming of cable for placement. Suitable stands shall be provided to facilitate uncoiling of wires/strands without damage to steel. Care shall be taken to avoid the possibility of steel coming into contact with the ground.

1805.3 Positioning

1805.3.1 Post Tensioning

Prestressing tendons shall be accurately located and maintained in position, both vertically and horizontally, as per drawings.

Tendons shall be so arranged that they have a smooth profile without sudden bends or kinks.

The location of prestressed cables shall be such as to facilitate easy placement and vibration of concrete in between the tendons. High capacity tendons shall be used to reduce the number of cables thereby eliminating the necessity of grouping. The selected profiles of the tendons shall be such that their anchorages are not located in the top deck surface. Where two or more rows of cables have to be used, the cables shall be vertically in line to enable easy flow of concrete. The clear vertical and horizontal distance between any two cable ducts shall in no case be less than 50 mm or diameter of duct, whichever is greater, when grouping of cable is not involved. Where precast segments are used, the clear distance between cables shall be at least 150 mm.

Sheathing shall be placed in correct position and profile by providing suitable ladders and spacers. Such ladders may be provided at intervals of approximately 1.0 m. Sheathing shall be tied rigidly with such ladders/spacer bars, so that they do not get disturbed during concreting.

The method of supporting and fixing shall be such that profile of cables is not disturbed during vibrations, by pressure of wet concrete, by workmen or by construction traffic.

Sheathing in which the permanent tendon will not be in place during concreting shall have a temporary tendon inserted or shall be stiffened by some other method to the approval of the Engineer. The temporary tendon shall be pulled out by a special threading machine or other contrivance, before threading the permanent tendon.

Where possible, tendons shall be placed prior to stressing. Tendons shall be handled with care to avoid damage or contamination, to either the tendon or the sheathing. Any tendons which are damaged or contaminated shall be cleaned or replaced.

1805.3.2 Pre-tensioning

Prestressing steel shall be accurately located and maintained in position, both vertically and horizontally, as per drawings.

1805.3.3 Each anchorage device shall be set square to the line of action of the corresponding prestressing tendon and shall be positioned securely to prevent movement during concreting.

The anchorage devices shall be cleaned to the satisfaction of the Engineer, prior to the placing of concrete. After concreting, any mortar or concrete which adheres to bearing or wedging surfaces, shall be removed immediately.

1805.4 Cutting

Cutting and trimming of wires or strands shall be done by suitable mechanical or flame cutters. When a flame cutter is used, care shall be taken to ensure that the flame does not come in contact with other stressed steel. The flame cutting of wire or strand shall be carried out at least 75 mm beyond the point where the tendon will be gripped by the anchorage or jacks.

In post tensioned members, the ends of prestressing steel projecting beyond the anchorages, shall be cut after the grout has set.

1805.5 Protection of Prestressing Steel

Prestressing steel shall be continuously protected against corrosion, until grouted. The corrosion protector shall have no deleterious effect on the steel or concrete or on the bond strength of steel to concrete. Grouting shall conform to these Specifications or as directed by the Engineer.

In the case of external prestressing, steel shall be encased in suitable polyethelene pipes before grouting.

1805.6 Sheathing Duct Joints

1805.6.1 General

The sheathing and all joints shall be water tight and shall withstand a pressure of 1.1 times the grouting pressure and maximum grouting head due to grout. Any temporary opening in the sheathing shall be satisfactorily plugged and all joints between sheathing and any other part of the prestressing system, shall be effectively sealed to prevent entry of mortar, dust, water or other deleterious matter. Sheathing shall be neatly fitted at joints without internal projection or reduction of diameter.

Enlarged portions of the sheathing at couplings or anchorages shall be of sufficient length to provide for the extension of the tendons.

Special attention shall be paid to the junction at the anchorage end, where the sheathing must be tightly fitted on the protruding trumpet end of anchorage and thereafter sealed preferably with tape, to make it water-proof.

1805.6.2 Coupling of MS Sheathing Ducts

For major projects, the sheathing duct should preferably be manufactured at the project site utilizing appropriate machines. With such an arrangement, long lengths of sheathing ducts may be used with consequent reduction in the number of joints and couplers.

Where sheathing duct joints are unavoidable, they shall be made cement slurry tight by the use of corrugated threaded sleeve couplers, which can be tightly screwed on to the outer side of the sheathing ducts.

The length of the coupler should not be less than 150 mm but should be increased upto 200 mm wherever practicable. The joints between the end of coupler and duct shall be sealed with tape to prevent penetration of slurry during concreting. The couplers of adjacent ducts shall be staggered wherever practicable. As far as possible, couplers should not be located in curved zones. The corrugated sleeve couplers can be conveniently manufactured using the sheath making machine with the next higher size of die set.

For typical details of coupling refer Appendix 1800/1.

1805.6.3 Coupling of HDPE Sheathing Ducts

The HDPE sheathing can be joined by any one of the following three methods.

a) Use of threaded sleeve couplers in the same manner as given for metallic sheathing.

b) Welding of two ends of HDPE sheathing using appropriate machine such as Roaster Machine or Mirror Machine.

c) Use of heat shrink couplers made of HDPE sleeves. The sleeves are integrated with the parent sheathing by hot process by using heating torch.

For typical details of coupling, refer Appendix 1800/I.

1805.7 Grout Vents

Grout vents of at least 20 mm diameter shall be provided at both ends of the sheathing and at all valleys and crests along its length. For cables longer than 50 m grout vents or drains may be provided at or near the lowest points. Additional vents shall also be provided along the length of sheathing such that the spacing of consecutive vents do not exceed 20 m. Each

of the grout vents shall be provided with a plug or similar device capable of withstanding a pressure of 1.0 MPa without leakage of water, air pressure or grout.

1805.8 Anchorages

All bearing surfaces of the anchorages shall be cleaned prior to concreting and tensioning.

Anchor cones, blocks and plates shall be securely positioned and maintained during concreting such that the centre line of the duct passes axially through the anchorage assembly.

The anchorages shall be recessed from the concrete surface by a minimum of 100 mm.

After the prestressing operations are completed and prestressing wires/strands are cut, the surface shall be painted with two coats of epoxy of suitable formulation having a dry film thickness of 80 micron per coat and entire recess shall be filled with concrete or non-shirk/ pre-packaged mortar of epoxy concrete.

1806 SUPERVISION

Prestressing operation and grouting shall be entrusted only to specially trained and qualified personnel. All prestressing accessories shall be procured from authorized manufacturers with in-house testing facilities. The Contractor shall be required to engage specialized agencies who should also be entrusted with the total service contract for fabrication of cables, protection of cables during concreting, prestressing and grouting. Necessary certificates shall be accorded by such specialized agencies that the work has been carried out in accordance with prescribed specifications. In exceptional cases, the prestressing and grouting operations could be entrusted to the bridge Contractor himself, if the Employer is convinced that he is well experienced and has qualified personnel and sufficient track record to substantiate his performance in the particular system of prestressing being adopted,.

1807 TENSIONING EQUIPMENT

All tensioning equipment shall be procured from authorized manufacturers only and be approved by the Engineer prior to use. Where hydraulic jacks are used, they shall be power-driven unless otherwise approved by the Engineer. The tensioning equipment shall satisfy the following requirements :

i) The means of attachments of the prestressing steel to the jack or any other tensioning apparatus shall be safe and secure.

ii) Where two or more wires/strands constitute a tendon, a single multi-pull stressing jack shall be used, which is capable of tensioning simultaneously all the wires/strands of the tendon. Suitable facilities for handling and attaching the multi-pull jack to the tendons shall be provided.

iii) The tensioning equipment shall be such that it can apply controlled total force gradually on the concrete without inducing dangerous secondary stresses in steel, anchorage or concrete.

iv) Means shall be provided for direct measurement of the force by use of dynamometers or pressure gauges fitted in the hydraulic system itself to determine the pressure in the jacks. Facilities shall also be provided for the liner measurement of the extension of prestressing steel to the nearest mm and of any slip of the gripping devices at transfer.

All dynamometers and pressure gauges including a master gauge shall be calibrated by an approved laboratory immediately prior to use and then at intervals not exceeding 3 months and the true force determined from the calibration curve.

Pressure gauges shall be concentric scale type gauges accurate to within two percent of their full capacity. The minimum nominal size of gauge shall be 100 mm. The gauge shall be so selected that when the tendon is stressed to 75 percent of its breaking load, the gauge is reading between 50 percent and 80 percent of its full capacity. Suitable safety devices shall be fitted to protect pressure gauges against sudden release of pressure.

Provision shall be made for the attachment of the master gauge to be used as a check, whenever requested for by the Engineer.

Jack and pump shall be calibrated from an approved laboratory prior to use and then at intervals not exceeding three months.

1808 POST TENSIONING

Tensioning force shall be applied in gradual and steady steps, in such a manner that the applied tensions and elongations can be measured at all times. The sequence of stressing, applied tensions and elongations shall be in accordance with the approved drawing or as directed by the Engineer.

It shall be ensured that in no case, the load is applied to the concrete before it attains the strength specified on the drawing or as stipulated by the prestressing system supplier, whichever is more.

After prestressing steel has been anchored, the force exerted by the tensioning equipment shall be decreased gradually and steadily so as to avoid shock to the prestressing steel or anchorage.

The tensioning force applied to any tendon shall be determined by direct reading of the pressure gauges or dynamo-meters and by comparison of the measured elongation with the calculated elongation. The calculated elongation shall be invariably adjusted with respect to the modulus of elasticity of steel for the particular lot as given by the manufacturer.

The difference between calculated and observed tension and elongation during prestressing operations shall be regulated as follows :

a) If the calculated elongation is reached before the specified gauge pressure, continue tensioning till the specified gauge pressure is attained, provided the elongation does not exceed 1.05 times the calculated elongation. If 1.05 times the calculated elongation is reached before the specified gauge pressure is attained, stop stressing and inform the Engineer.

b) If the calculated elongation has not been reached at the specified gauge pressure, continue tensioning by intervals of 5 kg/sq. cm until the calculated elongation is reached, provided the gauge pressure does not exceed 1.05 times the specified gauge pressure.

c) If the elongation at 1.05 times the specified gauge pressure is less than 0.95 times the calculated elongation, the following measures must be taken, in succession, to determine the cause of this discrepancy:

   i) Check the correct functioning of the jack, pump and leads.

   ii) De-tension the cable. Slide it in its duct to check that it is not blocked by mortar which has entered through holes in the sheath. Re-tension the cable, if free.

   iii) Re-establish the modulus of elasticity of steel for the particular lot from an approved laboratory.

   If the required elongation is still not obtained, further finishing operations such as cutting or sealing, should not be undertaken without the approval of the Engineer.

d) When stressing from one end only, the slip at the end remote from the jack, shall be accurately measured and an appropriate allowance made in the measured extension at the jacking end.

A complete record of prestressing operations along with elongation and jack pressure data shall be maintained in the format given in Appendix 1800/II.

The number of stages of prestressing and grouting shall be kept to a minimum, preferably two in the case of simply supported girders.

1809 GROUTING OF PRESTRESSED TENDONS

Grouting of prestressed tendons shall be carried out in accordance with provisions given in Appendix 1800/III. A record of grouting operations shall be maintained in the format given in Appendix 1800/IV.

1810 PRE-TENSIONING

1810.1 General

The planning and construction aspects of the tensioning bed, tensioning bench, abutments at location of anchorage, steam curing system, formwork of the concrete elements and arrangements for de-moulding, lifting, stacking and transportation of the pre-tensioned concrete elements are all specialised items of work and shall be entrusted to engineers specifically experienced in this type of work.

1810.2 Concrete Mix Requirements

Minimum cement content, maximum water cement ratio and other durability requirement shall be same as indicated in Table 1700-2 and Table 1700-3 of these Specifications except that minimum grade of concrete shall be M40.

1810.3 Form Work

All sides, bottoms and header forms shall be of steel or any other suitable material. Forms shall be of sufficient thickness, with adequate external bracing and shall be stiffened and adequately anchored to withstand the forces due to placement and vibration of concrete. All joints of form work shall be leak proof. The bottom shutter shall have arrangement to permit longitudinal movement of girder concrete, which occurs while imparting prestress. Identifying marks shall be placed on the girders to indicate the correct orientation to ensure correct debonding locations, which may not be symmetrical, longitudinally.

1810.4 Laying of Deflected Tendons

For long span pre-tensioned girders, deflected tendons shall be used instead of the conventional straight tendons. This requires the use of hold-up/hold-down devices at each deflected location, in order to hold the tendons in the desired profile and location. A hold-down device normally consists of rollers attached to a vertical rod, which passes through the bottom form and is anchored to the form substructure or foundation to resist the prestress force. The force which must be resisted by the hold-up/hold-down device, and therefore its size, depends on the number of deflected strands and the trajectory angles of the strands. The strand can be either tensioned after it is held in its deflected profile by means of hold-up/ hold-down devices or it can be tensioned first and then brought into its deflected profile. The number of deflected strands and their angle directly influence the size and cost of the hold-up/hold-down devices.

1810.5 Production and Testing of Concrete

A fully automated, computer-controlled batching plant shall be used. The batching plant shall

be provided with moisture measuring and compensating devices and automatic pump for dispensing admixtures.

Sampling and testing of concrete shall be as per Section 1700 of these Specifications. Additional cubes shall be prepared to determine the concrete strength at the time of removal of forms and transfer of prestress. Adequate number of samples shall be taken for this purpose, which shall be cured in identical conditions to those of the concrete of respective girders.

1810.6 Compaction, Removal of Form Work and Curing

Compaction of concrete may be achieved through needle vibrators or form vibrators along with needle vibrators. For casting of precast beams, any of the two commonly known techniques of precasting viz. (i) Long Line method or (ii) Short Line method maybe used.

The girders shall not be moved from the casting location until stipulated strength requirements have been attained. The concrete shall have attained a minimum compressive strength of 20 MPa at the time of removal of forms. Curing of concrete may be achieved through water or steam followed by water curing. Approved curing compound may also be used.

Longitudinal movement of the girders that takes place while releasing the prestress shall be suitably catered for. In case of long line method of precasting, adequate longitudinal gap shall be provided between girder ends during precasting, to accommodate projecting reinforcement and required length of the projecting strands.

1810.7 Stressing Bed for Pre-tensioning

The abutments and bed for pre-tensioning of tendons shall be designed to withstand the total tensioning force.

A notice shall be displayed adjacent to the stressing bed showing the maximum tensioning force permitted.

Where concrete elements are cast and prestressed individually, the stressing bench or moulds shall be rigid enough to sustain the reaction of the prestressing force without distortion.

In the long line method of prestressing, sufficient locator plates should be distributed throughout the length of the bed to ensure that the wires are maintained in their proper position during concreting. The moulds shall be free to slide in the direction of their length and thus permit the transfer of the prestressing force to all the concrete elements along the whole line.

Sufficient space shall be left in between the ends of concrete elements to permit access for cutting the strands/wires after transfer. Hold-downs or deflectors shall be used for holding

or deflecting the tendons in required position firmly. Deflectors which are in contact with the tendon shall have a diameter not less than the tendon or 15 mm, whichever is more.

The tensioning force required to be applied as stated on the drawings shall be the force remaining in the strands/wires after all strands/wires have been anchored to the abutments of the stressing bed and after the anchorage slip has already taken place. The tensioning force shall be determined by direct reading of the pressure gauges or dynamo-meters and by the measured elongation after slip.

The Contractor shall submit method of tensioning the tendons including the arrangement and layout of prestressing beds and all tendon deflection points, to the Engineer for approval before manufacture commences. The Contractor shall carry out trial stressing operations to establish the frictional resistance offered by the hold-downs and the slip during anchoring.

Debonding of strands, wherever required, shall be carried out using HDPE debonding tubes. PVC tubes shall not be permitted for this purpose. After pre-tensioning the strands and before concreting, a recheck shall be made to ensure that the debonding tubes are placed at the intended locations. Both ends of debonding tubes shall be effectively sealed against ingress of any cement slurry using epoxy putty or any other suitable material.

The Contractor shall also submit calculation showing that the hold-downs have been designed and constructed to withstand concentrated loads resulting from the application of the tensioning force.

1810.8 Pre-tensioning and De-tensioning Operations

1810.8.1 Pre-tensioning of Strands

Pretensioning of strands may be carried out either using single-pull jack or multi-pull jack. In case of the former, it shall be ensured at each stage, that the strands are stressed symmetrically, so that the supporting system of the strands does not rotate or distort. This may be achieved through suitably designed moving trolley engaging the strands or any other suitable arrangement. Prestressing force shall be transferred to metallic spacer, trolley, etc. so that the force does not remain on the hydraulic system for long.

It is necessary to apply a small prestressing force, through hydraulic jacks to remove slackness of the strands. After removal of the slackness, the strands must be thoroughly examined to ensure correct alignment, including that of the debonding tubes. Reference marks for measuring elongation shall then be established and the full strand load is applied thereafter. Loads indicted by the gauging system shall control the tensioning, with elongation checked on every strand.

It shall be ensured that the entire length of each strand between the grips is free of any defects. This is of particular importance while precasting girders using long line method entailing, longer pieces of strands between the grips.

Transfer of prestress shall not proceed until the Engineer has approved the proposed method. Strands and deflection devices shall be released in such a pre-determined order that unacceptable tensile stresses are not induced in the concrete.

Prior to transfer of the force to the units, all strands shall be tested for tightness and any loose strands shall be reported to the Engineer, who will decide whether the affected units should be rejected.

The Engineer may require that strands be marked at each end of any unit to allow measurement of the pull-in of the strands.

The sequence of transfer of prestressing force shall be done strictly as indicated in the drawings and ensuring that eccentricities of the prestressing force in the vertical and horizontal directions of the concrete element are minimum during the entire sequence.

The maximum slip of any tendon during transfer shall not exceed 3 mm for bottom strands and 5.5 mm for a top strands at any end of the concrete element. In case the slip exceeds above value, design of the member shall be got checked for the actual slip before acceptance.

1810.8.2 De-tensioning of Strands

Detensioning, in order to impart the prestress shall be effected gradually, so that there is no significant loss of bond due to slippage of strands and consequent increase in the transmission length. For detensioning, the trolley is pulled outward by a small distance, in order to release the metallic spacers, before releasing the prestressing force. Even when the pretensioning is carried out through single-pull jack, the release of the force in all the strands, while imparting the prestress to the concrete, shall be simultaneous. It shall be ensured that, during this process, prestressing forces at any stage does not exceed 90 percent of 0.1 percent proof stress.

1810.9 Cutting of Strands

Cutting of strands shall be carried out carefully so as not to affect the untensioned reinforcement which is in their close proximity. Diamond bit saw shall be used to cut the strands. Strands and untensioned reinforcement shall be so arranged that the untensioned reinforcement and those strands which are required to be extended into the adjoining cast in-situ concrete, do not get affected during cutting operation.

Under factory conditions, flame cutting may be resorted to. Yellow flame should be used first to heat the strand without introducing undue stresses and then blue flame for the

actual cutting. Heat cutting of strand shall be carried out symmetrically about the vertical axis of the members. One strand at a time on each side of the vertical axis for all girders in a long line shall be cut in the same manner. The above process shall be repeated till all the strands are cut. This will ensure gradual and uniform transfer of prestress to girders.

1811 PROTECTION OF ENDS

The exposed ends of the strands and the concrete surfaces of the ends of the units shall be wire brushed clean of all rust, loose mortar, grease and dirt.

The exposed ends of the strands and concrete surface within 50 mm of tendons shall be then abraded to provide a clean sound surface. An epoxy tar paint suitably formulated to give a dry film thickness of 80 micron per coat, shall then be immediately applied over the ends of the tendons unless otherwise directed.

A second coat of paint shall be applied prior to the drying out of the first coat.

1812 SAFETY PRECAUTIONS DURING TENSIONING

Care shall be taken during tensioning to ensure the safety of all persons in the vicinity.

Jacks shall be secured in such a manner that they will remain in position, even if their grip on the strand is lost.

No person shall be allowed to stand behind the jacks or close to the line of the tendons while tensioning is in progress.

The operations of the jacks and measurement of the elongation shall be carried out in such a manner and that the safety of all concerned is ensured.

A safety barrier shall be provided at both ends to prevent any tendon which might become loose, from recoiling unchecked.

During actual tensioning operation, warning signs shall be displayed at both ends of the tendon.

After prestressing, concrete shall not be drilled cut, chipped, or disturbed in anyway, without express approval of the Engineer.

No welding shall be permitted on or near strands nor shall any heat be applied to tendons. Any strand which has been affected by welding or weld spatter or heat shall be rejected.

1813 SURFACE PREPARATION

All surfaces, coming in contact with deck slab/ diaphragm shall be adequately prepared by green cutting, using surface retarders, by mechanical means to remove the laitance and

just expose the aggregates. Usually, precast girders join the cast in-situ concrete of end diaphragms at the points of high shear stress. Therefore, it is extremely important to adequately prepare the end faces of the girders for effective bonding of the new concrete. This shall be done using suitable mechanical means(such as 100% hacking) to ensure that the course aggregates are just exposed. Surface retarders, may also be used for this purpose.

1814 TRANSPORTATION STORAGE AND HANDLING OF PRECAST GIRDERS

Precast girders shall be transported in an upright position. Points of support and the direction of the reactions with respect to the girder shall approximately be the same during transportation, and storage as when the girder is placed in final position.

Method of transportation should be planned in such a way that the vehicle employed to transport the long girders can successfully negotiate the available road geometry. Adequate care shall be taken to ensure that the girder being transported does not topple due to unstable arrangement. For this purpose, height of the vehicle shall be kept as low as possible. This will also help in accommodating greater height of the system during transportation below existing bridges or through any other constraints. Girders should be transported only after 28 day concrete strength is achieved.

When members are to be stacked, they shall be firmly supported at such bearing positions as will ensure the stresses induced in them are always less than the permissible design stresses. Further, inclined side supports shall be provided at the ends and along the length of a precast girder to prevent lateral movements or instability.

Care shall be taken during storage, hoisting and handling of precast units to prevent them from being cracked or damaged. Units cracked or damaged by improper storing or handling, shall be replaced by the Contractor at his cost.

Handling of precast girders from precasting location to the bridge site requires careful operation. Lifting location shall be strictly as indicated on the construction drawings.

Lifting devices generally consist of loops of prestressing strand or mild steel bars or any other suitable arrangement. If it is anticipated that embedded material for lifting devices will be cast into the face of the member that will be exposed to view or to corrosive materials in the completed structure, the depth of removal of the embedded material and the method of filling the resulting cavities, shall be as shown on the construction drawings. The depth of removal shall not be less than the clear cover required to the reinforcing steel. The cavity so formed shall be suitably grouted for protecting the embedded metal. Also, the projecting reinforcement shall be suitably protected against corrosion.

1815 TOLERANCES

1815.1 Permissible Tolerances for Structural Unit

The dimensional tolerances for precast girders shall be as under:

Length	± 10 mm
Flange width and thickness	± 5 mm
Depth	± 5 mm
Web thickness	± 5 mm
Minimum surface unevenness	1.5 mm on 3 m template

1815.2 Tolerances for Prestressing Strands

Permissible tolerances for positional deviation of prestressing strands shall be as under:

Variation from the specified horizontal profile	5 mm
Variation form the specified vertical Profile	5 mm
Variation form the specified position in member	3 mm

1816 TESTS AND STANDARDS OF ACCEPTANCE

The material shall be tested in accordance with these Specifications and shall meet the prescribed criteria and requirements

The work shall conform to these Specifications and shall meet the prescribed standards of acceptance.

1817 MEASUREMENTS FOR PAYMENT

Prestressed concrete shall be measured in cubic metres. The volume occupied by mild steel reinforcement/HYSD bars, high tensile steel, sheathing and anchorages shall not be deducted.

High tensile (prestressing) steel shall be paid for separately. Its length, as actually incorporated in the finished work, shall be measured and weight calculated therefrom in tonnes on theoretical basis, for payment.

Anchorage devices, additional length of cables for attaching jack, ducts or sheathing, grouting, non-prestressed steel reinforcement fixed to the anchorage devices, making of recesses and filling the same, protection by painting with epoxy and furnishing samples for testing, shall all be deemed to be incidental to and included in the item of high tensile steel and shall not be measured separately.

1818 RATE

The contract unit rate for cast in-situ prestressed concrete shall cover the cost of all materials, labour, tools and plant required for mixing, placing in position, vibrating and compacting, finishing as per directions of the Engineer, curing and other incidental expenses for producing concrete of specified strength to complete the structure or its components as shown on the drawings and according to specifications. The contract unit rate shall also include the cost of making, fixing and removing of all centering and formwork required for the work unless otherwise specified in the contract.

For precast prestressted concrete members, the unit rate, in addition to above, shall also include the cost of all materials, labour, tools and plant required, manufacturing in casting bed, transporting and placing the members in their final position as shown on the drawings and as directed by the Engineer.

The contract unit rate for high tensile steel shall cover the cost of material, labour, tools and plant required for procuring, placing, tensioning, anchoring and grouting the high tensile steel in the prestressed concrete as shown on the drawings and as per specifications or as directed by the Engineer.

The cost of anchorage devices, additional length of cables for attaching jack, ducts or sheathing, grout, non-prestressed steel reinforcement fixed to the anchorage devices, making of recesses and filling the same, protection by painting with epoxy and furnishing samples for testing, shall all be included in the unit rate. Rate shall also include payments, if any, to be made to the supplier of the prestessing system, who has to monitor, ensure and certify the correctness of all operations.

1900

STRUCTURAL STEEL

1901 DESCRIPTION

This work shall include furnishing, fabricating, transporting, erecting and painting structural steel, rivet steel, cast steel, steel forgings, cast iron and other incidental metal construction of the kind, size and quantity in conformity with the drawings and these Specifications or as directed by the Engineer.

1902 GENERAL

General requirements relating to the supply of material shall conform to the Specifications of IS:1387, for the purpose of which the supplier shall be the Contractor and the purchaser shall be the Engineer.

Finished rolled material shall be free from cracks, flaws, injurious seams, laps, blisters, ragged and imperfect edges and other defects. It shall have a smooth and uniform finish, and shall be straightened in the mill before shipment. It shall also be free from loose mill scale, rust, pits or other defects affecting its strength and durability.

The acceptance of any material on inspection at the rolling mill, foundry or fabricating plant where material for the work is manufactured, shall not be a bar to its subsequent rejection, if found defective.

Unless otherwise specified, high tensile steel rivets conforming to IS:1149 shall be used only for members of high tensile steel conforming to IS:961 and shall not be used for members of mild steel.

Unless otherwise specified, bolted connection of structural joints using high tensile friction grip bolts shall comply with requirements of IS:4000.

Cast iron shall not be used in any part of the bridge structure, except where it is subject to direct compression.

1903 MATERIALS

1903.1 All materials shall conform to Section 1000 of these Specifications. Special requirements are given below:

Mild steel for bolts and nuts shall conform to IS:226 but have a minimum tensile strength of 44 kg/sq.mm and minimum percentage elongation of 14.

High tensile steel for bolts and nuts shall conform to IS:961 but with a minimum tensile strength of 58 kg/sq.mm.

Use of high strength friction grip bolts shall be permitted only on satisfactory evidence of performance to the requirements (not covered by these Specifications) specified by the Engineer or as laid down in special provisions.

For cast steel, the yield stress shall be determined and shall not be less than 50 percent of the minimum tensile strength.

Plain washers shall be of steel. Tapered or other specially shaped washers shall be of steel or malleable cast iron.

Parallel barrel drifts shall have a tensile strength not less than 55 kg/sq.mm with elongation of not less than 20 percent measured on a gauge length of 4 $\sqrt{S_o}$.

(S_o = cross-sectional area).

1903.2 Materials for castings and forgings, fasteners, welding consumables and welding shall be as under :

1903.2.1 Castings and Forgings

Steel castings and forgings shall comply with the requirements of the following Indian Standards, as appropriate :

IS:1030	Carbon Steel Castings for General Engineering purposes
IS:1875	Carbon Steel Billets, blooms, slabs, bars for forgings
IS:2004	Carbon Steel Forgings for General Engineering purposes
IS:2644	High Tensile Steel Castings
IS:2708	1.5 Percent Manganese Steel Castings
IS:4367	Alloy and tool steel forgings for general industrial use

1903.2.2 Fasteners

Bolts, nuts washers and rivets shall comply with the following or relevant Indian Standards as appropriate :

IS:1148	Hot rolled rivet bars (up to 40 mm dia) for structural purposes
IS:1149	High tensile steel rivet bars for structural purposes
IS:1363	Hexagon head bolts, screw and nuts product grade C (Parts 1 to 3)
IS:1364	Hexagon head bolts, screw & nuts product grade A and B (Parts 1 to 3)

IS:1367	Technical supply conditions for threaded steel fastener (Parts 1 to 18)
IS:1929	Hot forged steel rivets for hot closing (12-36 mm dia)
IS:2155	Cold forged steel rivets for hot closing (6-16 mm dia)
IS:3640	Hexagon fit bolts
IS:3757	High strength structural bolts
IS:4000	High strength bolts in steel structures
IS:5369	Plain washers and lock washers – general requirements
IS:5370	Plain washers with outside dia = 3 X inside dia
IS:5372	Taper washers for channels (ISMC)
IS:5374	Taper Washers for I beams (ISMB)
IS:5624	Foundation bolts
IS:6610	Heavy washers for steel structures
IS:6623	High strength structural nuts
IS:6639	Hexagon bolts for steel structures
IS:6649	Hardened and tempered washers for high strength structural bolts and nuts.
IS:7002	Prevailing torque type steel hexagon nuts

1903.2.3 Welding Consumables

Welding consumables shall comply with the following Indian Standards as appropriate :

IS:814 (Part 1)	Covered Electrodes for Metal Arc Welding of Structural steel for welding other than sheets
IS:814 (Part 2)	For welding sheets
IS:1395	Low and medium alloy steel covered electrodes for manual Metal Arc Welding
IS:3613	Acceptance Tests for wire flux combinations for submerged arc welding of structural steel
IS:6419	Welding rods and bare electrodes for gas shielded arc welding of structural steel
IS:6560	Molybdenum and chromium-molybdenum low alloy steel welding rods and bare electrodes for gas shielded arc welding

IS:7280 Bare wire electrodes for gas shielded arc welding of structural steel

1903.2.4 Welding

IS:812 Glossary of terms relating to welding and cutting of metals

IS:816 Code of practice for use of metal arc welding for general construction in mild steel

IS:822 Code of procedure for inspection of welds

IS:1024 Code of practice for use of welding in bridges and structures subject to dynamic loading

IS:1182 Recommended practice for radiographic examination of fusion welded butt joints in steel plates

IS:4853 Recommended practice for radiographic inspection of fusion welded butt joints in steel pipes

IS:5334 Code of practice for magnetic particle flaw detection of welds

IS:7307 Approval tests for welding procedures : Part 1 fusion welding of steel

IS:7310 Approval tests for welders working to approved welding procedures : Part 1 fusion welding of steel

IS:7318 Approval tests for welders when welding procedure is not required : Part 1 Fusion welding of steel

IS:9595 Recommendations for metal arc welding of carbon and carbon manganese steels

1903.3 Corrosion resistant steel to be used in aggressive environment shall be low alloy steels containing a total of 1 percent to 2 percent alloys, in particular copper, chromium, nickel and phosphorous.

1903.4 Paints

All materials for paints and enamels shall conform to the requirements specified on the drawings or other special provisions laid down by the Engineer.

The type of paints which can be used shall be as follows :

a) Ordinary i.e. paints based on drying oils, alkyd resin, modified alkyd resin, phenolic varnish epoxy

b) Chemical Resistant – one pack type (ready for use) or two pack type (mixed before use).

c) Vinyl

d) Chlorinated rubber

e) Bituminous - (IS:9862)

f) Epoxy - (IS:14925)

g) Polyurethane - (IS:13759)

h) Zinc rich - (IS:14589)

Unless otherwise specified, paints shall conform to the relevant Indian Standards. Paints shall betested for the following qualities as per Specifications given in the relevant IS codes:

- Weight (for 10 litres of paint, thoroughly mixed)
- Drying time
- Consistency
- Dry thickness and rate of consumption

1904 FABRICATION

1904.1 General

All work shall be in accordance with the drawings and as per these Specifications. Fabrication work shall be taken up only after receipt of approved fabrication/working drawings. It shall be ensured that all parts of an assembly fit accurately together. All members shall carry mark number and item number and, if required, serial number. Method of marking shall be commensurate with the process of manufacture and such as to ensure retention of identity at all stages.

Unless specifically required under the contract, corresponding parts need not be interchangeable, but the parts shall be match marked as required under Clause 1904.9.

Templates, jigs and other appliances used for ensuring the accuracy of the work shall be of mild steel; where specially required, these shall be bushed with hard steel. All measurements shall be made by means of steel tape or other device properly calibrated. Where bridge materials have been used as templates for drilling, these shall be inspected and passed by the Engineer before they are used in the finished structure.

All structural steel members and parts shall have straight edges and plane surfaces. They shall also be free from twist. If necessary, they shall be straightened or flattened by pressure

unless they are required to be of curvilinear forms. Adjacent surfaces or edges shall be in close contact or at uniform distance throughout.

The Contractor shall submit his programme of work to the Engineer for his approval at least 15 days before the commencement of fabrication, which shall include the proposed system of identification and erection marks together with complete details of fabrication and welding procedures. He shall also submit for approval of Engineer, a Quality Assurance Plan according to the nature of fabrication work (whether welded or riveted) which should clearly define the points of checking and inspection during the stages of fabrication as well as supply of materials.

The Contractor shall prepare shop drawings for fabrication of any member and obtain approval of the Engineer before the start of work. Complete information regarding the location, type, size and extent of all welds shall be clearly shown on the shop drawings. These drawings shall distinguish between shop and field welds.

1904.2 Laminations in Plates

The following areas of plates shall not have laminations:

a) Steel plates and sections in which tension stresses are transmitted through thickness of plate or in region in which lamination could affect the buckling behavior and bending compression.

b) On each side of welded bearing diaphragm, strip of flange and web plate for a length equal to 25 times their thickness.

c) The strip of web plate for a length of 25 times its thickness on each side of single sided bearing stiffener welded to web.

d) For welded cruciform joints transmitting tensile stress through the plate thickness, for a length 4 times the thickness of plate on each side of attachment.

e) For edges of plates where corner welds are provided on the surface of such plates.

f) Other areas of plates or sections as may be specified by the Engineer.

1904.3 Straightening and Bending

1904.3.1 The straightening of plates, angles and other shapes shall be done by methods not likely to produce fracture or any injury to the metal. Hammering shall not be permitted. Heating, if permitted by the Engineer in special cases, shall be followed by as slow cooling as possible. Following the straightening of a bend or buckle, the surface shall be carefully inspected for evidence of fracture. Sharp kinks and bends may lead to rejection of material.

1904.3.2 Straightening by heating shall be done under controlled procedure. Temperature of the steel shall not be more than 650°C. Heating and cooling rate shall be appropriate to the particular type of steel and shall be as agreed and approved by the Engineer. Accelerated cooling shall not be carried out without the approval of the Engineer.

1904.3.3 Bending and Curving

Steel having yield stress more than 360 MPa shall not be heat curved. Rolled beams and girders may be curved by either continuous or V-type heating as approved by Engineer.

a) For the continuous method, a strip of sufficient length along the edge of top and bottom flange shall be heated simultaneously to desired temperature to obtain required curve.

b) For V-type of heating, the top and bottom flanges shall be heated in truncated triangular or wedge-shaped areas having their base along the flange edge and spaced at regular intervals along each flange. The truncate triangular pattern shall have an angle 15 to 30 with base not more than 250 mm long. The spacing and temperature shall be as required to obtain the required curvature and heating shall be at approximately the same rate along the top and bottom flanges.

For flange thickness of 32 mm or more, both inside and outside surfaces shall be heated concurrently.

The heat bending shall be conducted so that the temperature of steel does not exceed 620°C. The girder shall not be artificially cooled until temperature comes down to 315°C by natural cooling. The method of artificial cooling shall be as approved by Engineer.

Camber for rolled beams may be obtained by heat curving methods approved by Engineer. For camber in plate girders, the web shall be cut to prescribed camber with suitable allowance for shrinkage due to cutting, welding and heat curving.

1904.4 Preparation of Edges and Ends

1904.4.1 All structural steel parts, where required, shall be sheared, cropped, sawn or flame cut and ground accurately to the required dimension and shape. Material shall be cleaned and any burrs, scales or abnormal irregularities shall be removed.

1904.4.2 End/edge planing and cutting shall be done by any one of the following prescribed methods or left as rolled:

a) Shearing, cropping, sawing, machining, machine flame cutting.

b) Hand flame cutting with subsequent grinding to a smooth edge.

Sheared edges of plate not more that 16 mm thick, which are for secondary use such as stiffeners and gussets, shall be subsequently ground to smooth profile.

If ends of stiffeners are required to be fitted, they shall be ground, so that the maximum gap over 60 percent of the contact area does not exceed 0.25 mm.

1904.4.3 Where flame cutting or shearing is done, at least one of the following requirements shall be satisfied.

a) The cut edge is not subjected to applied stress.

b) The edge is incorporated in weld.

c) The hardness of cut edge does not exceed 350 HV 30.

d) The material is removed from edge to the extent of 2 mm or minimum necessary, so that the hardness is less than 350 HV 30.

e) Edge is suitably heat treated by approved method to the satisfaction of the Engineer and it is shown by dye penetrant or magnetic particle test that cracks have not developed.

f) Thickness of plate is less than 40 mm for machine flame cutting of materials conforming to IS:2062 up to Grade E250 (Fe 410w). The requirement of hardness below 350 HV 30 of flame cut edges shall be specified by the Engineer.

The flame cut edges shall be ground or machined over and above the requirements in (a) to (f), wherever specified by the Engineer.

1904.4.4 Where machining for edge preparation in butt joint is specified, the ends shall be machined after the members have been fabricated.

Outside edges of plate and section, which are prone to corrosion shall be smoothened by grinding or filing.

In the case of high tensile steel at least 6 mm of the material from the flame cut edge shall be removed by machining.

Longitudinal edges of all plates and cover plates in plate girders and built-up members shall be machined except in the following cases:

a) Rolled edges of single universal plates or flats

b) Covers to single flange plates.

c) Edges of single plates in compression and edges of single plates of thickness 25 mm or less, in tension, where machine flame cutting is acceptable.

d) Edges of single shaped plates over 2 mm thick not capable of being machined by ordinary method, which may be machine flame cut and the end surface ground.

e) Edges of universal plates or flats of the same nominal width used in tiers, if so authorized by the Engineer.

All edges of splice and gusset plates 12 mm thick and over, shall be machined and those less than 12 mm thick shall be sheared and ground.

The ends of plates and sections forming the main components of plate girders or of built-up members shall be machined, machine flame cut, sawn or hand flame cut and ground.

Where ends of stiffeners are required to be fitted, they shall be machined, machine flame cut, sawn, sheared and ground or hand flame cut and ground.

The ends of lacing bar shall be rounded unless otherwise specified.

Other edges and ends of mild steel parts shall be sheared and any burrs at edges shall be removed.

1904.5 Preparation of Holes

1904.5.1 Drilling and Punching

Holes for rivets, black bolts, high strength bolts and countersunk bolts/rivets (excluding close tolerance and turn fitted bolts) shall be either punched or drilled. For bolts/rivets less than 25 mm dia, the diameter of holes shall be 1.5 mm larger while for those of 25 mm dia or more, the diameter of holes shall be 2 mm larger than the diameter of the bolt/rivet.

All holes shall be drilled except those for secondary members such as floor plates, hand rails etc. Members which do not carry the main load can be punched subject to the thickness of member not exceeding 12 mm for material conforming to IS:2062 up to Grade E250 (Fe 410w).

Holes through material of more than one thickness or through main material thickness exceeding 20 mm for steel conforming to IS:2062 up to Grade E250 (Fe 410w) or 16 mm for steel conforming to IS:2062 up to Grade E300 (Fe 440w) and above, shall either be sub-drilled or sub-punched to a diameter of 3 mm less than the required size and then reamed to the required size. The reaming of material more than one thickness shall be done after assembly.

Where several plates or sections form a compound member, they shall, where practicable, be firmly connected together by clamps or tacking bolts and the holes shall be drilled through

the group in one operation. Alternatively, and in the case of repetition work, the plates and sections may be drilled separately from jigs and templates. Jigs and templates shall be checked at least once after every 25 operations. All burrs shall be removed.

In the case of repetition of spans, the erection of every span shall not be insisted upon, except where close tolerance or turned bolts are used, provided that methods are adopted to ensure strict interchangeability. In such cases, one span in ten or any number less than ten of each type shall be erected from pieces selected at random by the Engineer and should there be any failure of the pieces to fit, all similar spans shall be erected complete. In the event of spans being proved completely interchangeable, all corresponding parts shall carry the same mark so that sorting of the materials at site is facilitated.

1904.5.2 Block Drilling

Where the number of plates to be riveted exceeds three or the total thickness is 90 mm or more, the rivet holes, unless they have been drilled through steel bushed jigs, shall be drilled out in place 3 mm all round after assembling. In such cases, the work shall be tightly bolted together.

1904.5.3 Size of Holes

The diameters of rivet holes in millimetres are given in Table 1900-1.

Table 1900-1 : Diameters of Holes for Rivets

Nominal dia of Rivets (mm)	Dia of Holes (mm)
12	13.5
14	15.5
16	17.5
18	19.5
20	21.5
22	23.5
24	25.5
27	29.0
30	32.0
33	35.0

1904.5.4 Close Tolerance Bolts and Barrel Bolts

For close tolerance or turn fitted bolts, the diameter of the holes shall be equal to the nominal diameter of the bolt shank + 0.15 mm to - 0.0 mm.

The members to be connected with close tolerance or turn fitted bolts shall be firmly held together by service bolts or clamped and drilled through all thicknesses in one operation and subsequently reamed to required size within specified limit of accuracy as specified in IS:919 tolerance grade H8.

The holes not drilled through all thicknesses in one operation shall be drilled to smaller size and reamed after assembly.

1904.5.5 Holes for High Strength Friction Grip Bolts

All holes shall be drilled after removal of burrs. Where the number of plies in the grip does not exceed three, the diameters of holes shall be 1.5 mm larger than those of bolts. Where the number of plies in the grip exceeds three, the diameters of holes shall be as follows, unless otherwise specified by the Engineer:

- in outer plies — 1.5 mm larger than diameter of bolts
- in inner plies — not less than 1.5 mm and not more than 3.0 mm larger than diameter of bolts

1904.5.6 Removal of Burrs

The work shall be taken apart after drilling and all burrs left by drilling and the sharp edges of all rivet holes completely removed.

1904.6 Rivets and Riveting

1904.6.1 The riveting shall be done by hydraulic or pneumatic machine unless otherwise specified by Engineer. The driving pressure shall be maintained on the rivets for a short time after the upsetting is completed.

1904.6.2 The diameter of rivets shown on the drawings shall be the size before heating. Each rivet shall be of sufficient length to form a head of the standard dimensions as given in IS handbook on Steel Sections, Part-I. The underside of the head shall be free from burrs.

1904.6.3 The tolerance on the diameter of rivets shall be in accordance with IS:1148 for mild steel rivets and IS:1149 for high tensile steel rivets. Unless otherwise specified, the tolerance shall be minus.

1904.6.4 When countersunk head is required, the head shall fill the countersunk hole and projection after countersinking shall be ground off wherever necessary. The included angle of the head shall be as follows:

a) For plates over 14 mm thickness 90 degree

b) For plates upto and including 14 mm thickness 120 degree

1904.6.5 Mild steel rivets shall be heated uniformly to a light cherry red colour between 650°C to 700°C for hydraulic riveting and orange colour for pneumatic riveting. High tensile steel rivets shall be heated up to 1100°C. The rivets shall be red hot from head to the point when inserted and shall be upset in its entire length so as to fill the hole as completely as possible when hot. After being heated and before being inserted in the hole, the rivet shall be made free from scale by striking it on a hard surface. Any rivet whose point is heated more than the prescribed limit, shall not be driven.

Where flush surface is required, any projecting metal shall be chipped or ground off.

1904.6.6 Before riveting is commenced, the parts/members to be riveted shall be firmly drawn together with bolts, clamps or tack welds so that the various sections and plates are in close contact throughout. Every third hole of the joint shall have assembly bolts till riveted. Drifts shall only be used for drawing the work into position and shall not be used to such an extent as to distort the holes. Drifts of a larger size than the nominal diameter of the hole shall not be used.

1904.6.7 Driven rivets, when struck sharply on the head by a quarter pound rivet testing hammer, shall be free from movement and vibrations. Assembled riveted joint surfaces, including those adjacent to the rivet heads, shall be free from, dirt, loose scale, burrs, other foreign materials and defects that would prevent solid seating of parts.

1904.6.8 All loose or burnt rivets, rivets with cracked or badly formed defective heads or rivets with heads which are unduly eccentric with the shanks, shall be removed and replaced. In removing rivets, the head shall be sheared off and the rivet punched out so as not to damage the adjacent metal. If necessary, the rivets shall be drilled out. Re-cupping or re-caulking shall not be permitted. The parts not completely riveted in the shop shall be secured by bolts to prevent damage during transport and handling.

1904.7 Bolts, Nuts and Washers

1904.7.1 Black Bolts (Black All Over)

Black bolts are forged bolts in which the shanks, heads and nuts do not receive any further treatment except cutting of screw threads. They shall be true to shape and size and shall have the standard dimensions as shown on the drawings.

1904.7.2 Close Tolerance Bolts

Close tolerance bolts shall be faced under the head and turned on the shank.

1904.7.3 Turned Barrel Bolts

The diameter of the screwed portion of turned barrel bolts shall be 1.5 mm smaller than the diameter of the barrel unless otherwise specified by the Engineer. The diameter of the bolts as given on the drawing shall be the nominal diameter of the barrel. The length of the barrel shall be such that it bears fully on all the parts connected. The threaded portion of each bolt shall project through the nut by at least one thread. Faces of heads and nuts bearing on steel work shall be machined.

1904.7.4 High Strength Friction Bolts and Bolted Connections

The general requirement shall be as per relevant IS Specifications mentioned in **Clause 1903.2.2**. Unless otherwise specified by the Engineer, bolted connections of structural joints using high tensile friction grip bolts shall comply with requirements mentioned in IS:4000.

1904.7.5 Washers

In all cases where the full bearing area of the bolt is to be developed, the bolt shall be provided with a steel washer under the nut of sufficient thickness to avoid any threaded portion of the bolt being within the thickness of the parts bolted together and to prevent the nut when screwed up, from bearing on the bolt.

For close tolerance or turned barrel bolts, steel washers whose faces give a true bearing shall be provided under the nut. The washer shall have a hole diameter not less than 1.5 mm larger than the barrel and thickness not less than 6 mm so that the nut, when screwed up, will not bear on the shoulder of the bolt.

Taper washer, with correct angle of taper, shall be provided under all heads and nuts bearing on bevelled surfaces.

Spring washers may be used under nuts to prevent slackening of the nuts when excessive vibrations occur.

Where the heads or nuts bear on timber, square washers having a length of each side not less than three times the diameter of bolts or round washers having a diameter of 3½ times the diameter of bolts and with a thickness not less than one quarter of diameter, shall be provided.

1904.7.6 Studs

Ordinary studs may be used for holding parts together, the holes in one of the parts being tapped to take the thread of the stud. Countersunk studs may be used for making connections

where the surfaces are required to be clear of all obstruction, such as protruding heads of bolts or rivets. Studs may also be welded on the steel work in the positions required.

1904.7.7 Service Bolts

Service bolts shall have the same clearance as black bolts and where it is required that there should be no movement prior to final riveting, sufficient drifts or close tolerance bolts shall be used to locate the work.

1904.7.8 Tightening Bolts

Bolted connection joints with black bolts and high strength bolts shall be inspected for compliance of codal requirements.

All joint surfaces for bolted connection including bolts, nuts and washers shall be free of scale, dirt, burrs, other foreign material and other defects that would prevent solid seating of parts. The slope of surface of bolted parts in contact with bolt head and nuts shall not exceed 1:20 plane normal to bolt axis; otherwise suitable tapered washer shall be used.

All fasteners shall have a washer under nut or bolt head, whichever is turned in tightening.

Each fastener of joint shall be tightened to specified value or to 70 percent of specified minimum tensile strength by hand wrenches (turn of nut method) or calibrated wrenches, manual torque wrenches, impact wrench or any other method specified by the Engineer.

When 'turn of nut' method is used for tightening the bolts in a joint, all bolts shall be first brought to snug-tight condition i.e. tightening by full manual effort using ordinary wrench or by a few impacts of any impact wrench. All bolts in the joint shall then be tightened additionally by applicable amount of nut rotation as specified in IS:4000.

The Engineer shall observe the installation and tightening of bolts to ensure that correct tightening procedure is used and all bolts are tightened. Regardless of tightening method used, tightening of bolts in a joint should commence at the most rigidly fixed or stiffest point and progress towards the free edges, both in initial snugging and in final tightening.

The tightness of bolts in connection shall be checked by inspection wrench, which can be torque wrench, power wrench or calibrated wrench.

Tightness of 10 percent bolts, but not less than two bolts, selected at random in each connection shall be checked by applying inspection torque. If no nut or bolt head is turned by this application, connection can be accepted as properly tightened, but If any nut or head has turned, all bolts shall be checked and, if necessary, re-tightened.

1904.7.9 Drifts

The barrel shall be drawn or machined to the required diameter for a length of not less than one diameter over the combined thickness of the metal through which the drifts have to pass. The diameter of the parallel barrel shall be equal to the nominal diameter of the hole subject to a tolerance of +0 mm and - 0.125 mm. Both ends of the drift for a length equal to 1½ times the diameter of the parallel portion of the bar, shall be turned down with a taper to a diameter at the end equal to one-half that of parallel portion.

1904.8 Pins and Pin Holes

1904.8.1 Pins

The pins shall be parallel throughout and shall have a smooth surface free from flaws. They shall be of sufficient length to ensure that all parts that they connect, shall have a full bearing on them. Where the ends are threaded, they shall be turned to a smaller diameter at the ends for the thread and shall be provided with a pilot nut, where necessary, to protect the thread when being drawn to place. To facilitate insertion and extraction, pins may be chamfered beyond the required length and provided with suitable holes in the chamfered portion.

Pins more than 175 mm in length or diameter shall be forged and annealed.

1904.8.2 Pin Holes

Pin holes shall be bored smooth, straight and true to gauge at right angles to the axis of the member and parallel with each other, unless otherwise required. The tolerance in the length of tension members from outside to outside of pin holes and of compression members from inside to inside of pin holes shall be 1 mm. In built-up members, the boring shall be done only after the members have been finally riveted, welded or bolted unless otherwise approved by Engineer.

The specified diameter of the pin hole shall be its minimum diameter. The resulting clearance between the pin and the hole shall not be less than 0.5 mm and not more than 1 mm.

1904.9 Shop Erection and Match Marking

Before being dispatched, the steel work shall be temporarily erected in the fabrication shop for inspection by the Engineer either wholly or in such portion as the Engineer may require, so that he may be satisfied in respect of both the alignment and fit of all connections. For this purpose, sufficient number of parallel drifts and service bolts tightly screwed up, shall be employed. All parts shall fit accurately and be in accordance with drawings and specifications.

The steel work shall be temporarily assembled at place of fabrication. Assembly shall be of full truss or girder, unless progressive truss or girder assembly, full chord assembly, progressive chord assembly or special complete structure assembly, is specified by the Engineer.

The camber diagram showing camber at each panel point, method of shop assembly and any other relevant detail, shall be submitted to Engineer for approval.

The field connections of main members of trusses, arches, continuous beams, spans, bends, plate girders and rigid frame shall be assembled, aligned and accuracy of holes and camber checked by the Engineer. Only thereafter shall reaming of sub-sized holes to specified size, be taken up.

The assembly shall be dismantled only after final drilling of holes has been completed and the work has been passed by the Engineer. Before dismantling, each part shall be carefully marked for re-erection with distinguishing marks and stamped with durable markings. Drawings showing these markings correctly shall be supplied to the Engineer.

Unloading, handling and storage of steel work as per these Specifications shall be the responsibility of the Contractor. The cost of repairs, removal of rejected material, and transportation of replacement material to the site, shall be borne by the Contractor.

In cases where close tolerance or turned barrel bolts are used and interchangeability is not insisted upon, each span shall be erected and its members marked distinctly.

1904.10 Welding

1904.10.1 All welding shall be done with the prior approval of the Engineer and the workmanship shall conform to the specifications of the relevant Indian Standards as appropriate.

When material thickness is 20 mm or more, special precautions like pre-heating shall be taken as laid down in IS:9595. Surfaces and edges to be welded shall be smooth, uniform and free from fins, tears, cracks and other discontinuities. Surface shall also be free from loose or thick scale, slag rust, moisture, oil and other foreign materials. Surfaces within 50 mm of any weld location shall be free from any paint or other material that may prevent proper welding or cause objectionable fumes during welding.

The general welding procedures including particulars of the preparation of fusion faces for metal arc welding, shall be carried out in accordance with IS:9595.

The welding procedures for shop and site welds including edge preparation of fusion faces shall be as per details shown on the drawings and shall be submitted in writing for the approval of the Engineer, in accordance with Clause 22 of IS:9595, before commencing fabrication.

Any deviation from this procedure has to be approved by the Engineer. Preparation of edges shall, wherever practicable, be done by machine methods.

Machine flame cut edges shall be substantially as smooth and regular as those produced by edge planing and shall be left free of slag. Manual flame cutting shall be permitted by the Engineer only where machine cutting is not practicable.

Electrodes to be used for metal arc welding shall comply with relevant Indian Standards mentioned in Clause 1903.2.3. Procedure test shall be carried out as per IS:3613 to find out suitable wire-flux combination for welded joint.

Assembly of parts for welding shall be in accordance with provisions of Clauses 14 to 16 of IS:9595.

Welded temporary attachment should be avoided as far as possible. If unavoidable,the method of making any temporary attachment shall be asapproved by the Engineer. Any scars from temporary attachment shall be removed by cutting and chipping and surface shall be finished smooth by grinding to the satisfaction of the Engineer.

Welding shall not be carried out when the air temperature is less than 10°C, when the surfaces are wet, during periods of strong winds and in snowy weather, unless the work and the welding operators are adequately protected.

1904.10.2 For welding of any particular type of joint, welders shall undergo the appropriate welders qualification test as prescribed in any of the relevant Indian Standards IS:817, IS:1966, IS:1393, IS:7307 (Part I), IS:7310 (Part I) and IS:7318 (Part I) to the satisfaction of the Engineer.

1904.10.3 In assembling and joining parts of a structure or of built-up members, the procedure and sequence of welding shall be such as to avoid distortion and minimize shrinkage stress.

All requirements regarding pre-heating of parent material and interpass temperature shall be in accordance with provisions of IS:9595.

1904.10.4 Peening of weld shall be carried out wherever specified by the Engineer :

a) If specified, peening may be employed to be effective on each weld layer except the first filling layer.

b) After weld has cooled, the peening should be carried out by light blows from a power hammer using a round nosed tool. Care shall be taken to prevent scaling or flaking of weld and base metal from over peening.

1904.10.5 Where the Engineer has specified that the butt welds are to be ground flush, the loss of parent metal shall not be greater than that allowed for minor surface defects. The ends of butt joints shall be welded so as to provide full throat thickness. This may be done by use of extension pieces, cross runs or other means approved by the Engineer. Extension pieces shall be removed after the joint has cooled and the ends of the weld shall be finished smooth and flush with the faces of the abutting parts.

1904.10.6 The following joints and welds which do not perform well under cyclic loading, are prohibited.

a) Butt joints not fully welded throughout their cross-section

b) Groove welds made from one side only without any backing grip

c) Intermittent groove welds

d) Intermittent fillet welds

e) Bevel-grooves and J-grooves in butt joints for other than horizontal position

f) Plug and slot welds

1904.10.7 The run-on and run-off plate extension shall be used for providing full throat thickness at the end of butt welded joints. These plates shall comply with the following requirements.

i) One pair of run-on and one pair of run-off plates prepared from same thickness and profile as the parent metal shall be attached to start and finish of all butt welds, preferably by clamps.

ii) When run-on and run-off plates are removed by flame cutting, they shall be cut at more than 3 mm awayfrom the parent metal and the remaining metal of the platesshall be removed by grinding or by any other method approved by the Engineer.

1904.10.8 Welding of Stud Shear Connectors

The stud shear connectors shall be welded in accordance with the manufacturer's instructions including those relating to pre-heating.

The stud and the surface to which it is to be welded shall be free from scale, moisture, rust and other foreign material. The stud base shall not be painted, galvanised or cadmium plated prior to welding.

The welds shall be visually free from cracks and shall be capable of developing at least the nominal ultimate strength of studs.

The procedural trial for welding the stud shall be carried out when specified by the Engineer.

1904.11 Tolerances

Tolerances in dimensions of components of fabricated structural steel work shall be specified on the drawings and shall be subject to the approval of the Engineer before fabrication. Unless otherwise specified, all parts of an assembly shall fit together accurately within tolerances specified in Table 1900-2.

A machined bearing surface, where specified by the Engineer, shall be machined within a deviation of 0.25 mm for surfaces that can be inscribed within a square of side 0.5 m.

Table 1900-2 : Fabrication Tolerances - Individual Components

1)		**Length**	
	a)	Member with both ends finished for contact bearing	± 1 mm
	b)	Individual components of members with end plate connection	+ 0 mm - 2 mm
	c)	Other members of length i) Upto and including 12 M ii) Over 12 M	 ± 2 mm ± 3.5 mm
2)	Width		
	a)	Width of built-up girders	± 3 mm
	b)	Deviation in the width of members required to be inserted in other members	+ 0 mm - 3 mm
3)	Depth		
	Deviation in the depths of solid web and open web girders		+ 3 mm - 2 mm
4)	Straightness		
	a)	Deviation from straightness of columns i) in elevation ii) In plan	L/3000 subject to maximum of 15 mm where L is length of member + 5 mm - 0 mm L/1000 subject to a maximum of 10 mm
5)	Deviation of centre line of web from centre line of flanges in built-up members at contact surface		3 mm
6)	Deviation from flatness of plate of webs of built-up members in a length equal to the depth of the members		0.005 d to a maximum of 2 mm where d is depth of the member

7)	Tilt of flange of plate girders		
	a)	At splices and stiffeners, at supports, at the top flanges of plate girders and at bearings	0.005 b to a minimum of 2 mm where b is width of the member
	b)	at other places	0.015 b to a maximum of 4 mm where b is width of the member
8)	Deviation from squareness of flange to web of columns and box girders		L/1000, where L is nominal length of the diagonal
9)	Deviation from squareness of fixed base plate (not machined) to axis of columns. This dimension shall be measured parallel to the longitudinal axis of the column at points where the outer surfaces of the column sections make contact with the base plate		D/500, where D is the distance from the column axis to the point under consideration on the base plate
10)	Deviation from squareness of machined ends to axes of columns		D/1000, where D is as defined in 9 above
11)	Deviation from squareness of machined ends to axes of beams		D/1000, where D is as defined in 9 above
12)	Ends of members abutting at joints through cleats or end plates, permissible deviation from squareness of ends		1/600 of depth of member subject to a maximum of 1.5 mm

1904.12 Annealing and Stress Relieving

The members to be annealed or stress relieved as indicated in the contract or specified by Engineer, shall have finish machining, boring, etc., done subsequent to heat treatment. The stress relief treatment shall conform to the following unless otherwise specified by Engineer:

a) The temperature of the furnace shall not be more than 300°C at the time welded assembly is placed in it.

b) The rate of heating shall not be more than 220°C per hour divided by maximum metal thickness, subject to maximum of 220°C per hour.

c) After maximum temperature of 600°C is reached, the assembly shall be held within specified limit of time based on weld thickness. The temperature shall be maintained uniformly throughout the furnace during holding period such that temperature at no two points on the member will differ by more than 80°C.

d) The cooling shall be done in closed furnace when temperature is 300°C, at the maximum rate of 260°C per hour divided by maximum metal thickness. The local stress relieving shall be carried out if specified and procedure approved by Engineer.

1904.13 Rectification of Surface Defects

The surface defects revealed during fabrication or cleaning shall be repaired as specified. The repair by welding on any surface defect or exposed edge lamination shall be carried out only with approval of Engineer.

1904.14 Alignment at Splice and Butt Joints

Bolted splice shall be provided with steel packing plates where necessary, to ensure that the sum of any unintended steps between adjacent surfaces does not exceed 1 mm for HSFG bolted joints and 2 mm for other joints.

In welded butt joints, misalignment of parts to be joined shall not exceed the lesser of 0.15 times the thickness of thinner part or 3 mm. However, if due either to different thicknesses arising from rolling tolerances or a combination of rolling tolerances with above permitted misalignment, this deviation is more than 3 mm, it shall be smoothened by a slope not steeper than 1:4.

1905 ERECTION

1905.1 General

These provisions shall apply to erection of steel bridge superstructures or steel main members of bridge superstructures, which span between supports.

If the substructure and the superstructure are built under separate contracts, the Employer will provide the substructure, constructed to correct lines, dimensions and elevations properly finished and will establish the lines and the elevation required for erection purposes.

The Contractor shall erect the structural steel, remove the temporary construction and do all work required to complete the construction included in the contract, in accordance with the drawings and the specifications and to the entire satisfaction of the Engineer.

1905.2 Organisation and Equipment

The Contractor shall submit erection plans prepared by the fabricator showing the method and procedure of erection, compatible with the details of fabrication.

A detailed scheme shall be prepared showing stage-wise activities, with complete drawings and working instructions. This should be based on detailed stage-wise calculations taking into account specifications and capacity of erection equipment machinery, tools and tackles to be used and temporary working loads as per codal provisions.

The scheme shall also take into account site conditions such as hydrology, rainfall, flood timings and intensity, soil and subsoil conditions in the river bed and banks, maximum water depth, temperature and climatic conditions and available working space.

The scheme shall indicate details of materials required with specifications, quantities, type of storage, etc. It shall also indicate precisely the type of temporary fasteners to be used as also the minimum percentage of permanent fasteners to be fitted during the stage erection. The working drawings should indicate clearly the temporary jigs, fixtures, clamps, spacer supports, etc.

All components of the bridge shall be got checked for their adequacy to take care of temporary forces to which they are subjected during erection so as to ensure safety of the structure at all stages of erection.

Unless otherwise provided in the contract, the Contractor shall supply and erect all necessary falsework and staging and shall supply all labour, tools, erection plant and other materials necessary to carry out the work complete in all respects.

The Contractor shall supply all rivets, bolts, nuts, washers, etc. required to complete erection at site with an allowance for wastage of 12½ percent of the net number of field rivets, bolts, washers required, or a minimum of five numbers of each item.

Service bolts and nuts, washers and drifts for use in erection shall be supplied at 60 percent (45 percent bolts and 15 percent drifts) of the number of field rivets per span in each size (this includes wastage). A reduction in the numbers of service bolts, etc., may however, be specified by the Engineer if more than one span of each type is ordered.

Prior to actual commencement of erection, all equipment, machinery, tools, tackles, ropes, etc. need to be tested to ensure their efficient working. Frequent visual inspection of vulnerable areas is essential to detect displacements, distress, damages, etc.

Deflection and vibratory tests shall be conducted on supporting structures, launching truss and also the structure under erection. Any unusual deviation or looseness of fittings, is to be noted and reviewed.

For welded structures, welders' qualifications and skills are to be checked as per standard norms. Non-destructive tests of joints are to be carried out as per designer's directives.

Precision non-destructive testing instruments should be used for frequent checking of various important parameters of the structures and systematic records should be maintained.

Safety requirements shall conform to IS:7205, IS:7273 and IS:7269 as applicable and all aspects of safety commensurate with economy and speed of construction, shall be considered.

Erection work should start with complete resources mobilized as per latest approved drawings and after a thorough survey of foundations and other related structural work. For works of large magnitude, mechanization is to be adopted to the maximum extent possible.

The structure should be divided into erectable modules as per the scheme. The module should be pre-assembled in a suitable yard / platform and its matching with members of the adjacent module checked by trial assembly before erection.

The structure shall be set out to the required lines and levels. The steelwork should be erected, adjusted and completed in the required position to the specified lines and levels with sufficient drifts and bolts. Packing materials shall be available to maintain this condition. Quality surveillance checks need to be carried out frequently.

Before starting work, the Contractor shall obtain necessary approval of the Engineer for the methodology/procedure of erection, drawings of temporary works, use of erection equipments and the number and character of tools and plant. The approval of the Engineer shall not relieve the Contractor of his responsibility for the safety of his methodology and equipment or from carrying out the work fully in accordance with the drawings and specifications.

During execution, the Contractor shall have a competent engineer or foreman in charge of the work, who has adequate experience in steel erection and is acceptable to the Engineer.

1905.3 Handling and Storing of Materials

Suitable area for storage of structures and components shall be located near the site of work. The access road should be free from water logging during the working period and the storage area should be on firm levelled ground.

The store should be provided with adequate handling equipment viz. mobile crane, gantries, derricks, chain pulley blocks, winch etc., of capacity as required. Stacking area should be planned and have racks, stands sleepers, access tracks etc. and proper lighting.

Storage should be planned to suit erection work sequence and avoid damage or distortion of material. Excessively rusted, bent or damaged steel shall be rejected. Methods of storage and handling steel, whether fabricated or not, shall be subject to the approval of the Engineer.

Fabricated materials are to be stored with erection marks visible. They should not come into contact with earth surface or water and should be accessible to handling equipment.

All materials, consumables, including raw steel or fabricated material shall be stored specification-wise and size-wise above the ground upon platforms, skids or other supports. They shall be kept free from dirt and other foreign matter and shall be protected as far as possible from corrosion and distortion. Electrodes shall be stored specification-wise and shall

be kept in dry warm condition in properly designed racks. The bolts, nuts, washers and other fasteners shall be stored in gunny bags on racks above the ground with protective oil coating. Paint shall be stored under cover in air-tight containers. Small hand tools shall be kept in containers in covered stores.

IS:7293 and IS:7969 dealing with handling of materials and equipment for safe working should be followed. Safety nuts and bolts as directed are to be used while working. The Contractor shall be held responsible for loss or damage to any material paid for by the Employer while in his care or for any damage to such material resulting from his work.

1905.4 Formwork

The formwork shall be properly designed, substantially built and maintained for all anticipated loads. The Contractor, if required, shall submit plans for approval to the Engineer. Approval of the plans, however, shall not relieve the Contractor of his responsibility for adequacy and effective performance of the formwork.

1905.5 Assembling Steel

The parts shall be accurately assembled as shown on the drawings and match marks shall be followed. The material shall be carefully handled so that no parts will be bent, broken or otherwise damaged.

Hammering which will injure or distort the members shall not be done. Bearing surface or surfaces to be in permanent contact shall be cleaned, before the members are assembled. The truss spans shall be erected on blocking, so placed as to give the proper camber. The blocking shall be left in place until the tendon chord splices are fully riveted and all other truss connections pinned and bolted. Rivets in splices of butt joints of compression members and rivets in railings, shall not be driven until the span has been swung.

All joint surface for bolted connections including bolts, nuts, washers shall be free from scale, dirt, burrs, other foreign materials and defects that would prevent solid seating of parts. The slope of surface of bolted parts in contact with bolt head and nut shall not exceed 1 in 20, in a plane normal to bolt axis; in case it does, suitable tapered washer shall be used.

All fasteners shall have a washer under nut or bolt head, whichever is turned in tightening.

Any connection to be riveted or bolted shall be secured in close contact with service bolts or with a sufficient number of permanent bolts before the rivets are driven or before the connections are finally bolted. Joints shall normally be made by filling not less than 50 percent of holes with service bolts and barrel drifts in the ratio 4:1. The service bolts are to be fully tightened as soon as the joint is assembled. Connections to be made by close tolerance or barrel bolts shall be completed as soon as practicable after assembly.

Any connection to be site welded shall be securely held in position by approved methods to ensure accurate alignment, camber and elevation before welding is commenced.

Field riveting, welding, bolting and pin connections shall conform to the requirements of Clause 1904 as appropriate.

The correction of minor misfits involving harmless amounts of reaming, cutting and chipping will be considered a legitimate part of erection. However, any error in the shop fabrication or deformation resulting from handling and transportation which prevents proper assembling and fitting up of parts by moderate use of drifts or by a moderate amount of reaming and slight chipping or cutting, shall be reported immediately to the Engineer. In such cases, the method of correction shall be approved by the Engineer and carried out in his presence.

1905.6 Field Inspection

1905.6.1 General

All materials equipment and work of erection shall be subject to the inspection of the Engineer who shall be provided with all facilities required for this purpose, including labour and tools, at all reasonable times. Any work found defective is liable to be rejected.

1905.6.2 No protective treatment shall be applied to the work until the appropriate inspection and testing have been carried out. The stage inspection shall be carried out for all operations so as to ensure correctness of fabrication and good quality. Girder dimensions and camber shall not be finally checked until all welding and heating operations are completed and the member has cooled to a uniform temperature.

1905.6.3 Testing of Material

Structural steel shall be tested for mechanical and chemical properties as per appropriate Indian Standards as may be applicable and shall conform to requirements specified in IS:226, IS:2062, IS:11587, IS:1977, IS:8500 and IS:961.

Rivets, bolts, nuts, washers, welding consumables, steel forging, casting and stainless steel shall be tested for mechanical and chemical properties in accordance with the appropriate Indian Standards.

Rolling and cutting tolerance shall be as per IS:1852. The thickness tolerance check measurements for plates and rolled sections shall be taken at not less than 15 mm from edge.

Check for laminations in plates shall be carried out for areas specified in Clause 1904.2, by ultrasonic testing or any other specified method. Flame cut edges without visual signs of

laminations need not be tested for compliance with Clause 1904.2, unless otherwise specified by Engineer.

Steel work shall be inspected for surface defects and exposed edge laminations during fabrication and blast cleaning. Significant edge laminations found shall be reported to the Engineer for his decision.

Chipping, grinding, machining or ultrasonic testing shall be used to determine depth of imperfection.

1905.6.4 Testing of Connections

1905.6.4.1 Bolted Connections

Bolts and bolted connection joints with high strength friction grip bolts, shall be inspected and tested according to IS:4000.

Bolted connection joints with black bolts and high strength bolts shall be inspected and tested for compliance or requirements mentioned in Clause 1904.7.8.

1905.6.4.2 Riveted Connections

Rivets and riveted connection shall be inspected as per **Clause 1904.6** and tested for compliance of codal requirements.

The firmness of joint shall be checked by 0.2 mm filler gauge, which shall not go inside under the rivet head by more than 3 mm. There shall not be any gap between members to be riveted.

Driven rivets shall be checked with rivet testing hammer. When struck sharply on the head with the hammer, the rivet shall be free from movement and vibration. All loose rivets and rivets with cracks, badly formed or deficient heads or with heads which are eccentric with shanks, shall be cut out and replaced.

The alignment of plates at all bolted splice joints and welded butt joints shall be checked for compliance with codal requirements.

Testing of flame cut and sheared edges is to be done, where the hardness criteria given in the code are adopted. Hardness testing shall be carried out on six specimens.

1905.6.4.3 Welded Connections

Welding procedure, welded connections and testing shall be in compliance with codal requirements.

Welders qualification test shall be carried out as per requirements laid down in IS:7318 (Part 1). For approved welding procedures, the approval tests shall be as per requirements of IS:7310 (Part 1).

All facilities necessary for stage inspection during welding and on completion shall be provided to the Engineer or his inspecting authority by fabricator.

Adequate means of identification either by identification mark or other record shall be provided to enable each weld to be traced to the welder(s) by whom its welding was carried out.

All metal arc welding shall be in compliance with IS:9595 provisions.

The method of inspection shall be in accordance with IS:822 and extent of inspection and testing shall be in accordance with the relevant standards or as agreed with the Engineer.

1905.7 Procedure tests for Welds

The destructive and non-destructive test of weld shall be carried out according to IS:7307 (Part I).

1905.7.1 Non-Destructive Testing of Welds

One or more of the following methods may be applied for inspection or testing of weld :

i) **Visual Inspection :** All welds shall be visually inspected, to cover all defects of weld such as size, porosity, crack in the weld or in the HAZ (Heat Affected Zone) etc. Suitable magnifying glass may be used for visual inspection. A weld shall be acceptable by visual inspection if it is seen that :

a) The weld has no cracks.

b) Thorough fusion exists between weld and base metal and between adjacent layers of weld metal.

c) Weld profiles are in accordance with relevant Clauses of IS:9595 or as agreed with the Engineer.

d) The weld is of full cross section, except for the ends of intermittent fillet welds outside their effective length.

e) When weld is transverse to the primary stress, undercut shall not be more than 0.25 mm deep in the part that is undercut. When the weld is parallel to the primary stress, undercut shall not be more than 0.8 mm deep in the part that is undercut.

f) The fillet weld in any single continuous weld shall be permitted to under run the nominal fillet weld size specified by 1.6 mm without

correction, provided that the undersized portion of the weld does not exceed 10 percent of the length of the weld. On the web-to-flange welds of girders, no under-run is permitted at the ends for a length equal to twice the width of the flange.

g) The piping porosity in fillet welds shall not exceed one in each 100 mm of weld length and the maximum diameter shall not exceed 2.4 mm, except for fillet welds connecting stiffeners to web, where the sum of diameters of piping porosity shall not exceed 9.5 mm in any 25 mm length of weld and shall not exceed 19 mm in any 300 mm length of weld.

h) The full penetration groove weld in butt joints transverse to the direction of computed tensile stress, shall have no piping porosity. For all other groove welds, the piping porosity shall not exceed one in 100 mm of length and the maximum diameter shall not exceed 2.4 mm.

ii) **Magnetic Particle and Radiographic Inspection :** Welds that are subject to radiographic or magnetic particle testing in addition to visual inspection, shall have no crack.

Magnetic particle test shall be carried out according to IS:5334 for detection of crack and other discontinuity in the weld.

Radiographic test shall be carried out for detection of internal flaws in the weld such as crack, piping porosity inclusion, lack of fusion, incomplete penetration, etc. This test may be carried out as per IS:1182 and IS:4853.

iii) **Ultrasonic Inspection :** Ultrasonic testing, in addition to visual inspection, shall be carried out for detection of internal flaws in the weld such as cracks, piping porosity inclusion, lack of fusion, incomplete penetration, etc. Acceptance criteria shall be as per IS:4260 or any other relevant IS Specification and as agreed to by the Engineer.

Bearing stiffeners or bearing diaphragms adjacent to welds, flange plates adjacent to web/flange welds, plates at cruciform welds, plates in box girder construction adjacent to corner welds or other details where specified by the Engineer, shall be ultrasonically tested after fabrication.

iv) **Liquid Penetration Inspection :** The liquid penetrant test in addition to visual inspection, shall be carried out for detection of surface defect in the weld, as per IS:3658.

v) Non-destructive testing of the following welds shall be carried out using any of the methods described at (ii), (iii) and (iv) above, as may be agreed to by the Engineer.

a) All transverse butt welds in tension flanges

b) 10 percent of the length of longitudinal and transverse butt welds in tension flanges.

c) 5 percent of the length of longitudinal and transverse butt welds in compression flanges.

d) All transverse butt welds in webs adjacent to tension flanges as specified by the Engineer.

The particular length of welds in webs to be tested shall be agreed with the Engineer, in case (b) or (c).

Any lamination, lamellar tearing or other defect found shall be recorded and reported to the Engineer for his decision.

1905.7.2 Testing of Welds for Cast Steel

The testing of weld for cast steel shall be carried out as agreed to and directed by the Engineer.

1905.7.3 Stud Shear Connectors

Stud shear connectors shall be subjected to the following tests:

a) The fixing of studs after being welded in position shall be tested by striking the side of the head of the stud with a 2 kg hammer to the satisfaction of the Engineer.

b) The selected stud head shall not show displacement of more than 0.25 times the height of the stud, from its original position, if struck once with a 6 kg hammer. The stud weld shall not show any sign of a crack or lack of fusion.

The studs whose welds have failed the tests given in (a) and (b) shall be replaced.

1905.7.4 Inspection of Members

1905.7.4.1 Inspection Requirement

The fabricated member/component made out of rolled and built-up section shall be checked for compliance of the tolerances given in Table 1900-2. Inspection of member/components for compliance with tolerances, and the check for deviations shall be made over the full length.

During checking, the inspection requirement shall be indicated in such a manner that local surface irregularities do not influence the results.

For plate, out-of-plane deviation shall be checked at right angle to the surface over the full area of plate.

The cross girder or cross frame deviation shall be checked over the middle third of its length between each pair of webs and at the end of member for cantilever.

The web of rolled beam or channel section shall be checked for out-of-plane deviation in a longitudinal direction over a length equal to the depth of the section.

During inspection, the component/member shall not have any load or external restraint.

1905.7.4.2 Inspection Stages

The stages of inspection to be carried out for compliance of tolerances shall include, but not be limited to, the following :

a) For completed parts, component/members - on completion of fabrication and before any subsequent operation such as surface preparation, painting, transportation, erection.

b) For webs of plate and box girder, longitudinal compression flange stiffeners in box girders and orthotropic decks and all web stiffeners at site joints - on completion of site joint.

c) For cross girders and frames, cantilevers in orthotropic decks and other parts in which deviations have apparently increased - on completion of site assembly.

Where, on checking member/component for out-of-plane or out-of-straightness at right angles to the plate surface, and any other instances, the deviation exceeds the tolerance, the maximum deviation shall be measured and recorded. The record shall be submitted to the Engineer who will determine whether the component/member may be accepted without rectification, acceptedwith rectification or rejected.

1906 PAINTING

1906.1 General

Unless otherwise specified, all metal work shall be given approved shop coats as well as field coats of painting. The item of work shall include preparation of metal surfaces, application of protective covering and drying of the paint coatings along with all tools, scaffolding, labour and materials necessary.

Coatings shall be applied only to dry surfaces and the coated surfaces shall not be exposed to rain or frost before they are dry. The coatings shall be applied to all surfaces excluding shear connectors and inner surfaces of fully sealed hollow sections. While coating adjacent surfaces, care shall be taken to ensure that primer is not applied on the shear connectors.

1906.1.1 Types of Paints

i) Ordinary Paints

These include paints based on drying oils, alkyd resin, modified alkyd resin, phenolic varnish epoxy, etc.

Ordinary painting can generally be sub-divided into two types:

a) Primary Coats :

This shall be applied immediately after the surface preparation and should have the properties of adhesion, corrosion inhibition and imperviousness to water and air.

b) Finishing Coats :

This shall be applied over the primary coat and should have the properties of durability, abrasion resistance, aesthetic appearance and smooth finish.

ii) Chemical Resistant Paints

The more highly corrosion resistant paints can be divided into two main groups :

a) One pack paints (ready for use)

b) Two pack paints (mixed before use)

The two pack paints shall be mixed together just before use since they remain workable thereafter only for a restricted period of time.

iii) Other types of paints as mentioned in Clause 1903.4 of this Section may also be used, subject to approval by the Engineer.

All paints shall conform to relevant IS Standards as appropriate.

1906.1.2 Surfaces which are inaccessible for cleaning and painting after fabrication shall be painted as specified before being assembled for riveting.

All rivets, bolts, nuts, washers etc., are to be thoroughly cleaned and dipped into boiling linseed oil conforming to IS:77.

All machined surfaces are to be well coated with a mixture of white lead conforming to IS:34 and mutton tallow conforming to IS:887.

In site painting, the whole of the steel work shall be given the second cover coat after final passing and after touching up the primer and cover coats, if damaged in transit.

1906.1.3 Quality of Paint

Only paints which have been tested for the following qualities as per the specifications given in the relevant IS codes, should be used :

- Weight test (weight per 10 litre of paint thoroughly mixed)

- Drying time
- Flexibility and adhesion
- Consistency
- Dry thickness and rate of consumption

1906.1.4 Unless otherwise specified, all painting and protective coating work shall be done in accordance with IS:1477 (Part I).

1906.2 Surface Preparation

Steel surface to be painted either at the fabricating shop or at the site of work shall be prepared in a thorough manner with a view to ensuring complete removal of mill scale by one of the following processes as agreed to between the fabricator and the Engineer :

a) Dry or wet grit/sand blasting
b) Pickling which should be restricted to single plates, bars and sections
c) Flame cleaning

Primary coat shall be applied as soon as practicable after cleaning and in case of flame cleaning, while the metal is still warm.

All slag from welds shall be removed before painting. Surfaces shall be maintained dry and free from dirt and oil. Work out of doors in frosty or humid weather shall be avoided.

1906.3 Coatings

Prime coat to be used shall conform to the specification of primers approved by the Engineer. Metal coatings shall be considered as prime coats. Primer shall be applied to the blast cleaned surface before any deterioration of the surface is visible. In any case, the surface shall receive one coat of primer within 4 hours of abrasive blast cleaning.

All coats shall be compatible with each other. When metal based coatings are used, the undercoat shall be compatible with the concerned metal base. The undercoat and finishing coat shall preferably be from the same manufacturer. Successive coats of paints shall be of different shades or colours and each shall be allowed to dry thoroughly before the next is applied. Particular care shall be taken with the priming and painting of edges, corners, welds and rivets. Typical guidelines for epoxy based paints and the conventional painting system for bridge girders as given below, may be complied with :

a) **Epoxy Based Painting**

i) Surface preparation : Remove oil/grease by use of petroleum hydrocarbon solution (IS:1745) and grit blasting to near white metal surface.

ii) Paint system : 2 coats of epoxy zinc phosphate primer = 60 micron: Total 5 coats = 200 micron

b) **Conventional Painting System for areas where corrosion is not severe Priming Coat :**

One coat of ready mixed, red lead primer conforming to IS:102

or

One coat of ready mixed zinc chrome primer conforming to IS:104 followed by one coat of ready mixed red oxide zinc chrome primer conforming to IS:2074

or

Two coats of red oxide zinc chrome primer conforming to IS:2074.

Finishing Coats :

Two cover coats of red oxide paint conforming to IS:123 or any other approved paint shall be applied over the primer coat. One coat shall be applied before the fabricated steel work leaves the shop. After the steel work is erected at site, the second coat shall be given after touching up the primer and the cover coats, if damaged in transit.

c) **Conventional Painting System for areas where corrosion is severe**

Priming Coat :

Two coats of ready mixed red lead primer conforming to IS:102

or

One coat of ready mixed zinc chrome primer conforming to IS:104 followed by one coat of ready mixed zinc chrome primer conforming to IS:2074.

Finishing Coats :

Two coats of aluminium paint conforming to IS:2339 shall be applied over the primer coat. One coat shall be applied before the fabricated steel work leaves the shop. After the steel work is erected at site, the second coat shall be given after touching up the primer and the cover coats, if damaged in transit.

1906.4 Painting in the Shop

All fabricated steel shall be painted in the shop after inspection and acceptance with at least one priming coat, unless the exposed surfaces are subsequently to be cleaned at site or are metal coated. No primer shall be applied to galvanised surfaces.

Shop contact surfaces, if specifically required to be painted, shall be brought together while the paint is still wet.

Field contact surfaces and surfaces to be in contact with cement, shall be painted with primer only. No paint shall be applied within 50 mm of design location of field welds. Paint shall be completely dry before loading and transporting of the fabricated steel work to site.

Surfaces not in contact but inaccessible after shop assembly shall receive the full specified protective treatment before assembly.

Where surfaces are to be welded, the steel shall not be painted or metal coated within a suitable distance from any edges to be welded, if the specified paint or metal coating would be harmful to welders or is likely to impair the quality of site welds.

Exposed machined surfaces shall be adequately protected.

1906.5 Painting at Site

Surfaces which will be inaccessible after site assembly shall receive the full specified protective treatment before assembly.

Surfaces which will be in contact after site assembly shall receive a coat of paint (in addition to any shop priming) and shall be brought together while the paint is still wet.

Damaged or deteriorated paint surfaces shall be first made good with the same type of coat as the shop coat.

Where steel has received a metal coating in the shop, this coating shall be completed on site so as to be continuous over any welds, bolts and site rivets.

Specified protective treatment shall be completed after erection.

1906.6 Methods of Application

The methods of application of all paint coatings shall be in accordance with the manufacturer's written recommendation and shall be as approved by the Engineer. Spray painting may be permitted provided it will not cause inconvenience to the public and is appropriate to the type of structure being coated. Areas inaccessiblefor painting and areas shaded for spray application, shall be coated first by brushing.

Oil based red lead primers must be applied by brush only, taking care to work into all corners and crevices.

The primer, intermediate and finishing coats shall all be applied so as to provide smooth coatings of uniform thickness. Wrinkled or blistered coatings or coatings with pinholes, sags, lumps or other blemishes shall not be accepted. Where the Engineer so directs, the coating shall be removed by abrasive blast cleaning and replaced by the Contractor at his own cost.

1906.7 Protective Coatings in Different Environments

Since the severity of corrosion depends upon atmospheric conditions and these vary enormously, there is no single protective system or method of application that is suitable for every situation.

Table 1900-3 gives guidelines for various types of coatings to be used in various environmental conditions. Approximate life to first maintenance is also indicated.

1907 TESTS AND STANDARDS OF ACCEPTANCE

The materials shall be tested in accordance with relevant IS Specifications and necessary

test certificates shall be furnished. Additional tests, if required, shall be got carried out by the Contractor at his own cost.

The fabrication, furnishing, erection and painting of structural steel work shall be in accordance with these Specifications and shall be checked and accepted by the Engineer.

Table 1900-3 : Guidelines for Selection of Types of Protective Coatings

	Type of Coating	Exposure Condition
i)	Wire brush to remove all loose rust and scale; 2 coats drying oil type primer, and 1 under coat alkyd type paint; 1 finishing coat alkyd type. Total dry thickness = 150 µm	Moderate
ii)	Wire brush to remove all loose rust and scale; 2 coats drying oil type primer; 2 under coats micaceous iron oxide (MXO) pigmented phenolic modified drying oil. Total dry film thickness = 170 µm (life up to 5 years)	Polluted inland environment
iii)	Blast clean the surface; 2 coats of quick drying primer; undercoat alkyd type paint; 1 finishing coat alkyd type. Total dry film thickness : 130 – 150 µm	Moderate
iv)	Blast clean the surface; 2 coats of drying type oil primer; 1 under coat micaceous iron oxide pigmented drying oil type paint. Total dry film thickness : 165–190 µm	Polluted inland environments
v)	Blast clean the surface; 2 coats of metallic lead pigmented chlorinated rubber primer, 1 undercoat of high build chlorinated rubber primer, 1 under coat of high build chlorinated rubber; 1 finishing coat of chlorinated rubber. Total dry film thickness : 200 µm	Severe coastal and non-coastal interior situations
vi)	Blast clean the surface; 350 – 450 µm thickness coal tar epoxy.	Severe
vii)	Pickle; hot dip galvanised (Zinc). Total thickness : 85 µm (life up to 15-20 years)	Moderate
viii)	Grit blast, hot dip galvanised. (Zinc). Total thickness = 140 µm (life more than 20 years)	Moderate
ix)	Grit blast; 1 coat of sprayed zinc/aluminum followed by suitable sealer Total thickness = 150 µm (life up to 15-20 years)	Severe

1908 MEASUREMENTS FOR PAYMENT

The measurements of this item shall be in tonnes based on the net weight of metal in the fabricated structure, computed on the basis of nominal weight of materials.

The weight of rolled and cast steel and cast iron shall be determined from the dimensions shown on the drawings on the following basis :

- Rolled or cast steel : 7.84×10^{-3} kg/cu.cm.
- Cast Iron : 7.21×10^{-3} kg/cu.cm.

Weight of structural sections shall be nominal weight.

Weight of castings shall be computed from the dimensions shown on the drawings with an addition of 5 percent for fillets and over-runs.

Weight of rivet heads shall be computed by taking the weight of 100 snap heads as given in Table 1900-4.

When specially agreed upon, allowance for snap heads may be taken as a flat 2.5 percent of the total weight.

Table 1900-4 : Weight of Rivet Heads

Dia of Rivet as Manufactured-mm	Weight of 100 Snap Heads - kg
12	1.3
14	2.1
16	3.4
18	4.45
20	6.1
22	8.1
24	10.5
27	15.0
30	20.5
33	27.2

The Contractor shall supply detailed calculation sheets for the weight of the metal in the fabricated structure.

No additions shall be made for the weight of protective coatings, weld fillets, bolts, nuts and washers.

Where computed weight forms the basis for payment, the weight shall be calculated for exact cut sizes of members used in the structure, deductions being made for all cuts, except for rivet holes. Additions shall be made for the rivet heads as mentioned above.

When specially agreed upon, the basis for payment may be the bridge weight coRmplete, according to specifications included in special provisions of the contract.

1909 RATE

The contract unit rate for the completed structural steel work shall include the cost of all materials, labour, tools, plant and equipment required for fabrication, connections, oiling, painting, temporary erection, inspection, tests and complete final erection as shown on the drawings or as directed by the Engineer and as specified in these Specifications.

2000

BEARINGS

2001 DESCRIPTION

This work shall consist of furnishing and fixing bearings in position in accordance with the details shown on the drawings, to the requirements of these Specifications or as directed by the Engineer.

2002 GENERAL

i) Bearing plates, bars, rockers, assemblies and other expansion or fixed devices shall be in accordance with the details shown on the drawings.

ii) The bearings may either be supplied directly to the Engineer by the manufacturer to be installed by the Contractor or supplied and installed by the Contractor as part of the contract. In the former case, the manufacturer shall be associated with the installation of the bearings to the full satisfaction of the Engineer, whereas in the latter case, the Contractor shall be solely responsible for the satisfactory supply and installation of the bearing. In the detailed description of the specification, a general reference shall be made to the Contractor or manufacturer and the interpretation shall be as per terms of contract.

iii) The Contractor shall exercise the utmost care in setting and fixing all bearings in their correct positions and ensuring that uniformity is obtained on all bearing surfaces.

iv) Bearings shall be handled with care and stored under cover.

v) When bearing assemblies or plates are shown on the drawings to be placed (not embedded) directly on concrete, the concrete bearing area shall be constructed slightly above grade (not exceeding 12 mm) and shall be finished by grinding.

vi) It shall be ensured that the bearings are set truly level and in exact position as indicated on the drawings so as to have full and even bearing on the seats. Thin mortar pads (not exceeding 12 mm thickness) may be provided for this purpose.

vii) It shall be ensured that the bottoms of girders to be seated on the bearings are plane at the locations of the bearings and that the bearings are not displaced while placing the girders.

viii) M.S bearings sliding on M.S. plates shall not be permitted. For sliding plate bearings, stainless steel surface sliding on stainless steel plate with mild steel matrix shall be used. The other option shall be to provide PTFE surface sliding on stainless steel.

ix) Segmental rollers are not permitted; only full cylindrical rollers shall be used. Adequate width of base plate shall be provided to cater for anticipated movements of the supporting structure.

x) For seismic Zones IV and V, roller and rocker bearing components shall have guides to prevent them from being displaced during earthquakes.

xi) For bridges with skew angle less than 20°, the bearings shall be placed at right angles to the longitudinal axis of the bridge. For bridges with skew angle greater than 20°, very wide bridges and curved bridges, the location of bearings shall be ensured as shown on the drawings.

xii) Easy access to the bearing shall be made available for purposes of inspection and maintenance. Provision shall also be made for jacking up of the superstructure so as to allow repair/replacement of bearings.

xiii) For types of bearings not covered in this Section, required specifications shall be as laid down in the contract.

2003 STEEL BEARINGS

2003.1 Materials

2003.1.1 Mild Steel

Mild steel to be used for components of bearings shall comply with IS:2062, Steel for General Structural Purposes.

For all components and plates exceeding 50 mm in thickness requiring welding, the carbon content shall be ascertained and suitable welding procedure like pre-heating, use of low hydrogen electrodes etc, shall be adopted after approval by the Engineer.

2003.1.2 Forged Steel

Forged steel to be used in components of bearings shall be in accordance with **Clause 1009.5** of these Specifications.

All slabs shall be normalised after forging. If welding is involved and if the slabs are more than 20 mm thick, pre-heating of the slab up to 200°C shall be done.

Railway axles (R 19) are also acceptable as forged steel for rollers.

2003.1.3 High Tensile Steel

High tensile steel shall comply with IS:961.

2003.1.4 Cast Steel

Cast steel shall be in accordance with Clause 1009.1 of these Specifications.

For the purpose of checking the soundness, castings shall be ultrasonically examined following procedures as per IS:7666, with acceptance standard as per IS:9565. The castings may also be checked by any other accepted method of non-destructive testing as specified in IS:1030.

Quality level of castings shall be Level 3 as per IS:9565.

2003.1.5 Stainless Steel

Stainless steel shall be in accordance with Clause 1009.7 of these Specifications.

2003.1.6 Welds

Welding of steel conforming to IS:2062 shall be as per IS:1024 using electrodes as per IS:814.

2003.1.7 Grease

The grease for bearings shall conform to the requirements of IS:503 (Grade 4).

2003.2 Construction Operations

a) All work of steel bearings shall conform strictly to the drawings and shall be in accordance with the provisions of this Section. Care shall be taken to ensure that all parts of an assembly fit accurately together. The workmanship shall satisfy all relevant provisions laid down in Section 1900 of these Specifications.

b) Knuckle pins, rolling surfaces of the rollers and bearing surface of the bearing plates shall be machined and all bolt holes shall be drilled. The whole bearing shall be fitted and finished as required for good quality machined work to the satisfaction of the Engineer. However, in case of bearings which are to be grouted or bedded on a suitable yielding material, any surface which is to be in permanent contact with the grout or the yielding material, may be left unmachined.

c) In prestressed concrete construction involving launching of girders, slipping or jumping of rollers due to vibration or jolts, shall be avoided and adequate measures shall be taken to ensure that the roller assembly is not disturbed. It is normal practice to provide rocker bearings at the

launching end and place the beam on the rocker slightly in advance of placing on the roller.

d) During concreting of girders, the bearings shall be held in position securely by providing temporary connection between the top and bottom plates in case of fixed bearings and between top plate, base plate and saddle plate in case of roller-cum-rocker bearings or by any other suitable arrangement which prevents the relative displacement of the components.

e) In precast prestressed girders, where recesses are left on the underside of girders to receive the anchor bolts, grout holes extending to the sides or top of the beam shall be provided. The grout hole shall be filled with cement sand grout of mix 1:1 or with grout made of non-shrink high strength mortar. Alternatively, the precast girder may be fitted with a template screwed or bolted into sleeves already cast in the concrete, which can be removed and replaced by the top plate of the bearing at the time of erection of superstructure.

2003.3 Workmanship

a) Fabrication shall be carried out by an organization sufficiently experienced and qualified to undertake precision engineering of this type as approved by the Engineer.

b) Workmanship shall be of good quality such as to achieve neat finish and good appearance.

c) Castings shall be true to the forms and dimensions shown on the drawings and shall be free from pouring faults, sponginess, cracks, blow holes and other defects, affecting their appearance or strength. Warped or distorted castings shall not be accepted. Exposed surfaces shall be smooth and dense.

d) All castings shall be cleaned by sand or shot blasting to remove sand or scale and to present a clean uniform surface.

e) All irregularities, fins or risers shall be ground off flush with the adjacent surface. Castings with visible cracks, blow holes or similar blemishes shall be rejected if the imperfections are located in bearing surfaces or cannot be remedied to the satisfaction of the Engineer.

f) Imperfections which are not located in bearing surfaces shall be cleaned out, filled with weld metal of the appropriate composition and ground flush.

g) All surfaces of major components like top plates, saddle plates, base plates and rollers of the bearings shall be machined all over for correct alignment, interchangeability and proper fitting.

2003.4 Tolerances

Tolerances for individual components or of the assembled bearings shall be as shown on the drawings and subject to the approval of the Engineer.

Unless otherwise specified, the following tolerances shall be maintained.

i) **Rollers and Curved Surfaces**

Tolerances on diameter of rollers and all convex surfaces shall conform to K7 of IS:919.

Tolerances on diameter of all concave surfaces shall conform to D8 of IS:919.

ii) **Height of Bearings**

Tolerances on height of any component shall not exceed +0.5 mm. No minus tolerance shall be allowed. The edges of all ribs shall be parallel throughout their length.

iii) **Plates**

Tolerance on length and width of the plates shall not exceed +1.0 mm; tolerance on the thickness of the plate shall not exceed +0.5 mm. No minus tolerance shall be allowed. All rocking, rolling and sliding surfaces shall have a machine smooth finish to 20 micron maximum mean deviation as per IS:3073.

iv) **Castings**

No minus tolerance shall be allowed in the thickness of any part of the castings. The edges of all ribs shall be parallel throughout their length.

2003.5 Installation

2003.5.1 General

a) Bearings shall be placed in the position as shown on the drawings with all bearing surfaces in full contact and to the tolerances as specified.

b) Roller and rocker bearings shall be placed so that their axes of rotations are horizontal and normal to the direction of movement of the members they support. Upper and lower bearing plates shall be set horizontal in both directions.

c) During installation, the bearings shall be pre-set with respect to the bearing axis to account for the movement due to the following :

i) Temperature variation between the average temperature prevailing at the time of installation and the mean design temperature.

ii) Shrinkage, creep and elastic shortening of prestressed girders.

d) For bridges in gradient, the bearing plates shall be placed in a horizontal plane.

2003.5.2 Placing

a) On supporting structures, pockets shall be provided to receive anchor bolts; one side of the pocket shall project beyond the bearing plate. The pocket shall be filled with mortar and the concrete bearing area also shall be finished level by a thin and stiff mortar pad (of thickness not exceeding 12 mm) just before placing of bearing assemblies or bottom plate on the concrete seat. The mortar shall be of mix 1:1 or of the non-shrink prepacked type.

b) In case of precast girders a recess of 6 mm shall be provided on the underside with a level finish for housing the bearing plate. A thin and stiff mortar pad with thickness not exceeding 3 mm, shall be provided over the top plate before lowering the precast beam in position in order to ensure full and even pressure on the plate surface.

c) It shall be ensured that while placing the girders, the bearings are in their exact positions as indicated on the approved drawing and not displaced therefrom.

d) All concrete surfaces to be in contact with the mortar shall be thoroughly cleaned and wetted for a period not less than 24 hours before placing mortar. Operations are to be carried out when the surface temperatures of the exposed bearings are the minimum practicable.

e) No mortar that is more than 30 minutes old after completion of mixing, shall be used.

f) After placing and finishing the mortar, the bearing shall be checked for position and shims or other temporary supports removed and the mortar made good. If the bearing has moved, it shall be lifted, the mortar removed and the whole procedure repeated.

g) Exposed faces of the mortar shall be cured under damp hessian for 7 days.

h) Placing of the bearing and mortar shall only be carried out in the presence of the Engineer.

2003.5.3 Checking, Cleaning and Lubrication

a) Before installation, each bearing shall be uncrated, dis-assembled and checked. Any damaged parts shall be made good for approval.

b) All bearings with sliding surfaces shall be cleaned and lightly lubricated with an approved lubricant immediately before installation.

2003.6 Testing

i) The manufacturer has to produce test certificate from original producers of raw materials used in the manufacture of the bearings. Irrespective of the producers test certificates, the manufacturer will carry out the detailed tests on raw materials (both physical and chemical) for different types of raw materials used in the manufacture of the bearings as per relevant codes for such raw materials. For this purpose they will identify stock materials with certain batch number and draw samples from such stock materials and mark them with the same batch numbers. For each batch, 3 sets of samples will be drawn separately for tests of physical and chemical properties on samples. The manufacturer will carry out tests on chemical and physical properties on one set of samples and keep the remaining 2 sets of samples duly identified with the batch number for verification by the Engineer and/or his authorized representatives for confirmatory tests with respect to the results obtained by the manufacturer. Such tests can be carried out on a few samples selected at random at the discretion of the Engineer and/or his representatives. The following IS Codes may be referred for carrying out such tests (both physical and chemical):

IS:1030 for casting

IS:2062 for mild steel components

IS:2004 for forging

Other special materials shall be as per relevant IS/BS/AISI Codes.

ii) All machined cast steel components shall be tested by ultrasonic testing to level III of IS:9565. Critical surface shall also be checked by Dye Penetration Test (DPT) and/or magnetic particle test for detecting presence of surface defects.

iii) All forged steel components after machining will be subjected to ultrasonic testing. Guidelines given in Appendix 3 of IRC:83 (Part 1) may be referred. To ensure the reduction ratio, macro-etching test will be conducted on the integral test piece (per heat/batch) attached to anyone of the forgings.

iv) All bearings shall be tested to 1.25 times the design load. Recovery should be 100 percent. Contact surfaces shall be examined by sufficient illumination and ultrasonic/DPT tests for detecting any defects/cracks.

v) All welding shall be checked by Dye Penetration Test. If specifically required by Engineer, the X-ray test may also be done.

vi) Engineer may carry out the destructive testing of any component/ components of bearings supplied in order to check their conformity with the test results submitted.

vii) For large lots, (consisting of 12 sets or more), the bearings manufacturer shall, unless otherwise agreed by him and the Engineer, furnish a complete report on the process of quality control. The Engineer may appoint an authorized inspection agency for inspection on his behalf, which shall also submit reports to the Engineer regarding various tests performed on the bearing and certify the acceptance of the bearings.

The quality control report shall cover the following:

a) A detailed system of quality control including stage by stage inspection, starting from raw materials up to the finished bearing.

b) Test certificates of all raw materials. If manufacturer's test certificates are not available for the raw materials, the bearings manufacturer shall perform the necessary confirmatory tests as per relevant codes of practice and furnish the test results.

c) A list of consumption of raw material for a period of at least preceding one year.

d) Test certificates of bearings manufactured during preceding one year at the manufacturer's works.

viii) The Engineer shall reserve the right to witness inspection at manufacturer's works at any time. For this, the bearing manufacturer shall have in-house testing facilities as required.

ix) In case the lot size of similar bearings exceeds 12 sets as per the direction of the Engineer, one extra bearing for each set of 24 bearings or part thereof, shall be manufactured and the cost of such extra bearing shall be borne by the user.

x) The Engineer shall select the extra bearing(s) at random and shall perform various tests including destructive testing on it at his discretion, either at the manufacturer's works or at any other approved test laboratory, notwithstanding the test reports submitted.

xi) In case there is any major deficiency/discrepancy regarding material, the Engineer shall declare the whole lot of bearings as unacceptable.

xii) In case minor defects in fabrication, relating to welding or machining, are found in the test bearing before destructive testing and if the test bearing is found to be acceptable after destructive testing, the minor defects in the test bearings shall not be a bar to the acceptance of the entire lot.

xiii) The opinion of the Engineer in cases xi) and xii) above shall be final and binding on the manufacturer.

2003.7 Inspection, Maintenance and Replacement

i) Suitable easy access to the bearing shall be provided for inspection and maintenance.

ii) Provision shall be made for jacking up of the superstructure so as to allow for adjustment/repair/replacement of the rollers of the bearings.

iii) Each bridge bearing assembly and the adjacent members in contact with it, shall be inspected at least once a year to ascertain their actual condition. Suitable remedial measures shall be taken immediately if defects are noticed including replacement in the event of irreparable damage.

iv) The bearings shall also be examined carefully after unusual occurrences such as passage of heavy traffic/oversized loads, earthquakes and battering by floating debris in high floods.

2004 SPECIAL BEARINGS

2004.1 Spherical Bearing

Spherical bearings which will permit uniaxial translatory movement along longitudinal axis of the bridge and rotation on all axes, shall consist of the following parts :

a) **Bottom Plate**

A bottom plate of circular/square shape is provided with a circular concave surface integrally cast with it. The bottom plate is connected to the substructure by means of tight fitted anchor bolts, which are embedded in concrete. The material of bottom plate shall be cast steel.

Pure unfilled quality dimpled PTFE of specified thickness shall be provided on top of concave surface of bottom plate in order to allow smooth rotation.

b) **Saddle Plate**

A saddle plate of square/circular/rectangular shape and circular convex surface at bottom shall be placed in the concave surface of bottom plate. The radius of the convex bottom of the saddle plate shall be slightly less than that of the concave top surface of the bottom plate, so as to ensure sufficient contact over a small area. Rotation along

all axes shall be permitted on the contact surface of the saddle plate and the bottom plate. Pure unfilled quality dimpled PTFE sheet shall be recessed to specified depth of recess over the top of saddle plate. Suitable elastomeric seal shall be provided on the saddle plate to prevent ingress of dirt and moisture. The material of saddle plate shall be cast steel.

c) **Top Plate**

The top plate shall have stainless steel plate welded to its bottom which shall slide over PTFE. The top plateshall be connected to the superstructure by tight fitted anchor bolts. Translatory movements along longitudinal axis of bridge shall be accommodated at the PTFE/ Stainless steel sliding surface. The material of top plate shall be cast steel.

d) **Guide Plate**

Guide plates shall be welded to saddle plate so as to permit only longitudinal movement. The material of guide plates shall be cast steel.

2004.2 Pin Bearing

2004.2.1 A pin bearing shall consist of a metal pin provided within a metal cylinder to bear and transmit horizontal force along any direction in the horizontal plane and accommodate rotational movement about any axis. Pin bearings shall not bear or transmit any vertical load.

2004.2.2 The sliding spherical and pin bearing shall conform to BS:5400, Parts 9.1 and 9.2 and all relevant clauses of these Specifications. The term bearing shall include the entire assembly covering all the accessories required for operation, erection and dismantling for replacement. All bearings shall be of replaceable type. The design of bearings shall be in accordance with the specifications mentioned/international specifications. The manufacturer shall get the design approved from Engineer and should be associated with installation of bearings.

2004.2.3 Materials

i) The material of pin bearing including rocker plates shall be high tensile steel conforming to IS:961.

ii) All materials shall be original, unused or non-recycled conforming to relevant specifications.

iii) Cast steel, mild steel and stainless steel shall conform to Clause 2003.1.

iv) Copolymer polytetrafluoroethylene (PTFE) unfilled quality shall have required properties as per BS:5400 and thickness as specified.

v) Anchor bolts shall be as per relevant IS specifications.

2004.2.4 Seating of Pin Bearing

i) Backing plate with studs welded on the face opposite to the seating face shall be delivered by the manufacturer.

ii) This backing plate shall be accurately positioned on the reinforcement grid of the pedestal and levelled.

iii) Studs shall be tack welded/tied to the reinforcement to keep the backing plate in proper location during casting.

iv) Depth of embedment of the backing plate in the concrete shall be as per relevant drawing.

v) The round base of the pot (bottom) of the pin bearing assembly shall be connected to the backing plates by anchor screws after concreting of pier cap/pedestal.

vi) In order to ensure successful transfer of large horizontal forces to be resisted by the Pin bearing, great care shall be taken in detailing the reinforcement in the substructure and the superstructure adjacent to the studs in the backing plate.

2004.3 Acceptance Test on Spherical Bearings

i) All bearings shall be checked for overall dimensions.

ii) All bearings shall be load tested to 1.25 times design vertical load.

iii) A pair of bearings selected at random shall be tested to determine coefficient of friction which shall be less than 0.05.

iv) Two bearings selected at random shall be tested for permissible rotation.

2004.4 Acceptance Test on Pin Bearings

i) All bearings shall be checked for overall dimensions

ii) All bearings shall be load tested (if required, for design horizontal load only)

2005 ELASTOMERIC BEARINGS

Elastomeric bearings shall cater for translation and/or rotation of the superstructure by elastic deformation.

2005.1 Materials

i) Chloroprene Rubber(CR) only shall be used.

ii) Grades of raw elastomer of proven use in elastomeric bearings, with low crystallization rates and adequate shelf life viz. Neoprene WRT, Neoprene W, Bayprene 110, Bayprene 210, Skyprene B-5, Skyprene B-30, Denka S-40V and Denka M-40, shall be used.

iii) No reclaimed rubber or vulcanized wastes or natural rubber shall be used.

iv) The polychloropene content of the compound shall not be lower than 60 per cent. The ash content shall not exceed 5 per cent of its weight. Polychloropene content shall be determined in accordance with ASTM-D297 and ash content as per IS:3400-Part XXII.

v) Use of synthetic rubber-like materials such as Ethyl Propylene Dimonomer (EPDM), Isobutane Isoprene Copolymer (IIR) and Chloro-Isoprene Copolymer (CIIR) shall not be permitted.

2005.1.2 Properties of Elastomer

The elastomer shall conform to the properties specified in Table 2000-1.

Table 2000-1 : Properties of Elastomer

Property	Unit	Value of the Characteristic Specified			Test Method IS Specification Reference
(1)	(2)	(3)			(4)
1. Physical properties 1.1 Hardness	IRHD	50 ± 5	60 ± 5	70 ± 5	IS:3400 (Part II)
1.2 Minimum tensile strength - Moulded test piece - Test piece from bearing	MPa	17 14	17 14	17 14	IS:3400 (Part I)
1.3 Minimum elongation at break - Moulded test piece - Test piece from bearing	% %	450 400	400 350	300 250	IS:3400 (Part II) IS:3400 (Part II)

Property	Unit	Value of the Characteristic Specified	Test Method IS Specification Reference
(1)	(2)	(3)	(4)
2. Maximum compression set (%) (24 h, 100 ± 1 °C)	%	< 35	IS:3400 (Part X)
3. Accelerated aging (72 h, 100 ± 1 °C) (Maximum change from un-aged value)			IS:3400 (Part IV)
3.1 Maximum change in hardness	IRHD	± 5	
3.2 Maximum change in tensile strength	%	± 15	
3.3 Maximum change in elongation	%	± 30	

2005.1.3 Shear modulus (G) is the apparent "conventional shear modulus" of the elastomer bearing determined by testing. At nominal temperature of 23 °C ± 2°C, the value of G shall comply with the values given in **Table 2000-2**.

Table 2000-2 : Shear Modulus at Nominal Temperature

Hardness (IRHD)	G (MPa)	Tolerances of G (MPa)
(1)	(2)	(3)
50 ± 5	0.7	± 0.15
60 ± 5	0.9	± 0.18
70 ± 5	1.15	± 0.20

2005.1.4 The adhesion strength of elastomer to steel plates determined according to IS:3400 (Part XIV) method A, shall not be less than 7 Kn/m.

2005.1.5 For elastomeric bearings (CR) used in adverse climatic conditions, the ozone resistance of elastomer shall be proved satisfactory when assessed by test according to IS:3400 (Part XX). The testing shall be carried out for a duration of 96 hours at a temperature of 40±1°C, strain of 30 per cent and ozone concentration of 100 pphm by volume.

If any cracking is detected by visual observation at the end of the test, the material shall be considered unsatisfactory. No specific tests for assessment of low temperature resistance are deemed necessary.

Note : For use of elastomer in extreme cold climates, the Engineer may specify special grade of low temperature resistant elastomer in conformity with operating ambient temperature conditions. The specifications for such special grade elastomer including the tests for low temperature resistance, shall be mutually agreed by the Engineer and the producer/ supplier and are outside the purview of these Specifications.

2005.1.6 Laminates of mild steel conforming to IS:2062/IS:1079 or equivalent international grade, shall only be permitted. The yield stress of the material shall not be less than 250 MPa. Use of any other material like fibre glass or similar fabric as laminates, shall not be permitted.

2005.1.7 The manufacturers of elastomeric bearings shall satisfy the Engineer that they have in-house facilities for carrying out the following tests on elastomer in accordance with the relevant provisions of ASTM D-297.

a)	Identification of polymers	:	to confirm the usage of chloroprene (Appendix X-2)
b)	Ash content	:	to determine the percentage (sub-section 34)
c)	Specific gravity	:	(sub-section 15)
d)	Polymer content	:	(sub-section 10)

The Engineer shall invariably get the test (a) performed in his presence or in the presence of his authorized representative. In case of any dispute regarding interpretation of results, the Engineer may carry out test as per ASTM S-3452-78 (chromatography test) at the manufacturer's cost in a recognized test house. The elastomer specimen to conduct the test shall be obtained from the bearing selected at random for destructive test. The remaining part of the test bearing shall be preserved by the Engineer for any test to be done later, if required.

2005.2 Manufacturing and Workmanship

i) Plain pad and strip bearing shall be moulded in one piece, or comprise single pieces cut from previously moulded strips or slabs. Cutting shall produce a smooth surface without injurious heating of the elastomer.

ii) Bearing with steel laminates shall be moulded as a single unit in a mould and vulcanised under heat and pressure. Moulding of elements

in separate units and subsequent bonding as well as cutting from large sized cast, shall not be permitted.

iii) The moulds used shall have standard surface finish adequate to produce bearings free from any surface blemishes.

iv) Steel plates for laminates shall be sand/grit blasted, clean of all mill scales and shall be free from all contaminants prior to bonding by vulcanization. Rusted plates with pitting shall not be used. The plates shall be rounded so as to be free of sharp edges.

v) Bonding shall be carried out during vulcanisation using suitable bonding agent for bonding of elastomer to steel such that the bond peel strength is at least 7 N/mm width when tested in accordance with IS:3400 Part XIV method A.

vi) Spacers used in mould to ensure cover and location of laminates shall be of minimum size and number practicable. Any hole at surface or in edge cover shall be filled in subsequently.

vii) Care shall be taken to ensure uniform vulcanizing conditions and homogeneity of elastomer through the surface and body of bearings.

viii) The vulcanizing equipment/press shall be such that between the platens of the press, the pressure and temperature are uniform and capable of being maintained at constant values as required for effecting a uniform vulcanization of the bearing.

ix) The moulding dies utilized for manufacturing the bearings shall be so set inside the platen of the press that the pressure developed during vulcanization of the product is evenly distributed and the thickness maintained at all places are within acceptable tolerance limits taking into consideration the expansion/shrinkage allowance of vulcanizate (the product of vulcanization).

x) The raw compound which is introduced inside the metal dies for vulcanization shall be accurately weighed each time and shall be of sufficient quantity to ensure proper flow of material to every part of the die so that a homogeneous and compact bearing is produced without any sign of sponginess or deficiency of material at any place.

xi) Before the rubber mix of any batch is used for producing vulcanized bearings, test pieces in the form of standard slab and buttons shall be prepared in accordance with prescribed standards and salient properties tested and recorded regularly against each batch of production to monitor the quality of the products.

xii) Bearings of similar size to be used in a particular bridge project shall be produced by identical process and in one lot as far as practicable. Phased production may be resorted to only when the total number of bearings is large.

2005.3 Manufacturing Tolerances

The bearings shall be fabricated/manufactured with the tolerances specified in Table 2000-3. Tolerances of thickness of individual layer of elastomer, dimension of laminates, and flatness of laminates are primarily meant for quality control during production. In order to measure thickness of individual layer of elastomer, dimension of laminates and flatness of laminates of a finished bearing, it is essential to cut the bearing, which may be done if agreed upon between the manufacturer and the buyer.

Table 2000-3: Tolerances

	Items	Tolerances
1)	**Overall linear plan dimensions**	-3 mm, +6 mm
2)	**Total mean bearing thickness** (The mean thickness is the arithmetic average of the thickness measured at five points on the major surface as indicated for various shaped bearings: Rectangular : corners and centre Circular : corners of inscribed square and centre)	-2.5%, +5%
3)	**Parallelism**	
a)	Of top surface of bearing with respect to the bottom surface as datum	1 in 200
b)	Of one side surface with respect to the other as datum	1 in 100
4)	**Thickness of individual layer of elastomer**	
a)	Inner layer of elastomer	±12% (max of 2 mm)
b)	Outer layer of elastomer	+20% (max of 1 mm)
c)	Side cover	-0 mm, +3 mm
5)	**Dimension of laminates**	
a)	Plan dimensions of laminates	-3 mm, + 0
b)	Thickness of laminate	± 10%
c)	Parallelism of laminate with respect to bearing base as datum (with respect to diameter for plates circular in plan and shorter side for plates rectangular in plan)	1 in 100

	Items	Tolerances
6)	**Flatness** Flatness shall be assessed by placing a straightedge along the diagonal or diameter. The gap between the straightedge and the surface shall not exceed the tolerances specified below	
a)	Load bearing surface of the bearing	0.3% of diameter or diagonal or 2% of mean bearing thickness which ever is higher
b)	Steel laminate	1% of diameter or diagonal (max of 1.5 mm)

2005.4 Acceptance Specifications

The manufacturer shall have all the test facilities required for the process and acceptance control tests installed at his plant to the complete satisfaction of the Engineer. The test facilities and their operation shall be open to inspection by the Engineer on demand.

All acceptance and process control tests shall be conducted at the manufacturer's plant. Cost of all materials, equipment and labour shall be borne by the manufacturer unless otherwise specified or specially agreed to between the manufacturer and Engineer.

A testing programme shall be submitted by the manufacturer to the Engineer and his approval obtained before commencement of acceptance testing.

Any acceptance testing delayed 180 days beyond the date of production shall require special approval of the Engineer and modified acceptance specification, if deemed necessary by him.

All acceptance testing shall be conducted by the Inspector with the aid of the manufacturer's personnel having adequate expertise and experience in rubber testing, working under the supervision of the Inspector and to his complete satisfaction.

Inspection and acceptance shall be carried out lot by lot.

2005.4.1 Acceptance Lot

A lot under acceptance shall comprise all bearings, including the pair of extra test bearings where applicable, of equal or near equal size produced under identical conditions of manufacture, to be supplied for a particular project.

The size and composition of acceptance lot shall be got approved by the Engineer.

For the purpose of grading levels of acceptance testing, a lot size of 24 or larger number of bearings shall be defined as a 'large lot', while a lot size of less than 24 number of bearings shall be defined as a 'small lot'.

When the number of bearings of equal or near equal size for a single bridge project is large and phased production and acceptance is permitted, the number of bearings supplied in any single phase of supply shall comprise a lot under acceptance. When such phased supply is made, each such lot shall be considered as a large lot for the purpose of acceptance testing.

2005.4.2 Levels of Acceptance Testing

The following two Levels of acceptance testing shall be adopted, depending on lot size :

Acceptance testing Level 1 is a higher level of inspection and testing and shall be applicable to large lots only, unless otherwise specified. This shall involve manufacture of two extra bearings for each lot to be used as test bearings and eventually consumed in destructive testing.

Acceptance testing Level 2 shall be applicable to small lots only, for which one extra bearing shall be manufactured and shall not involve destructive testing of finished bearing. Out of the lot, one bearing shall be selected at random for carrying out material tests. This bearing shall be excluded from the lot accepted.

Acceptance testing Level 1 may be specified for small lots also at the sole discretion of the Engineer taking into account the special importance of a bridge project. The cost of extra bearings, in such cases shall be borne by the user, while the cost of all other materials, equipment and testing shall be borne by manufacturer.

2005.4.3 Testing

Acceptance testing shall comprise general inspection, test on specially moulded test pieces and test on complete bearings or sections for measurement of various quality characteristics detailed below :

2005.4.3.1 Acceptance Testing Level 1

General Inspection

i) All bearings of the lot shall be visually inspected for absence of any defects in surface finish, shape, hardness or any other discernible superficial defects.

ii) All bearings of the lot shall be checked for tolerances for overall dimensions, mean bearing thickness, parallelism of bearing surfaces and flatness of load bearing surfaces as specified in Table 2000-3.

iii) The test shall be carried out on all bearings as part of the standard production process. The temperature of the room in which the bearings are tested shall not vary more than 10 °C. The main objective of this test is to eliminate poorly made bearings by visual inspection in a quick and efficient way. All bearings of the lot shall be subjected to an axial load to correspond to the design load at serviceability limit state while visual examination is made to check for discernible defects like:

Misalignment of reinforcing plates

Poor bond at laminate/steel interface

Variation in elastomer layer thickness

Any surface defects developed during testing

iv) During acceptance testing, complete test data shall be furnished by the manufacturer and one bearing per lot shall be selected at random and the same test shall be repeated. The bearings shall then be visually inspected for defects and the stiffness shall also be measured.

v) During the test, the deflection between 30 percent and 100 percent of the maximum load for the application shall be recorded and used to check the consistency of the stiffness value. Variation in stiffness of any individual bearing from the mean of the measured values for all such bearings of the lot, shall not be larger than 20 percent of the mean value.

vi) In case of any visual defect or unacceptable stiffness during acceptance testing, all bearings of the lot shall be subjected to the same test again and only the bearing that passes the test in all respects, shall be accepted.

Tests on Specially Moulded Test Pieces

i) Test pieces shall be moulded by the manufacturer with identical compound and under identical vulcanising conditions as used in the manufacture of the bearings of the acceptance lot. The process shall be open to inspection by the Inspector/Engineer.

ii) Test pieces offered for inspection shall be identified by suitable markings and duly certified by the manufacturer.

iii) The quality characteristics to be tested are listed below. The specification reference in parenthesis shall define the corresponding specification for test piece, test method and criterion for acceptance.

Composition (see Note 1 below)

Hardness (Table 2000-1, 1.1)

Tensile strength (Table 2000-1, 1.2)

Elongation at Break (Table 2000-1, 1.3)

Compression Set (Table 2000-1, 2)

Accelerated Ageing (Table 2000-1, 3)

Adhesion Strength (Clause 2005.1.4)

Ozone Resistance (see Note 2 below)

Note 1 The properties enumerated in ***Clause 2005.1*** and specific gravity of elastomer of test pieces from test bearing, shall be compared with those for corresponding specially moulded test pieces furnished by the manufacturer. The following variations shall be deemed maximum acceptable:

Specific Gravity	+ 02.
Ash Content	± 0.5 per cent (e.g., if the ash content of elastomer from test bearing is 4%, the ash content of the specially moulded test piece shall be within 3.5% to 4.5% or vice versa)

Hardness (Table 2000-1, 1.1)

Tensile strength (Table 2000-1, 1.2)

Elongation at Break (Table 2000-1, 1.3)

Compression Set (Table 2000-1, 2)

Accelerated Ageing (Table 2000-1, 3)

Adhesion Strength (Clause 2005.1)

Note 2 Ozone resistance test can be waived by the Engineer for bearings of CR when satisfactory results of ozone resistance tests on similar grade of elastomer may be available from process control records or development test data furnished by the manufacturer.

Where such process control data are not available or the frequency of testing not deemed adequate, ozone resistance test shall be mandatory for acceptance of bearings of CR.

However, such tests may not be insisted upon for bearings not located in adverse conditions of exposure and where the test on accelerated ageing could be considered as adequate.

Process and acceptance control tests for ozone resistance by an independent testing agency shall be acceptable.

Tests on Complete Bearings or Samples

i) Two bearings shall be selected at random from the lot as test bearings. The tests to be conducted are:

   a) Test for determination of shear modulus (on a pair of bearings) and

   b) Test for determination of compression stiffness (on one bearing out of the selected pair).

The test specifications and acceptance criteria shall conform to those given in Appendix-3 of IRC:83 Part II. The tested bearings shall be part of the lot accepted.

ii) The test for determination of shear bond strength shall be conducted on two identical bearings selected at random from the lot as test bearings or on two identical specially moulded sample bearings of plan dimension 200 mm x 300 mm and overall thickness 41 mm (3 elastomer layers of thickness 8 mm each, 4 reinforcing plates of thickness 3 mm each, face cover 2.5 mm, and side cover 4 mm) as agreed upon between the manufacturer and buyer:

The test specifications and acceptance criteria shall conform to those given in Appendix-3 of IRC:83 Part II. This is a destructive test and the test bearings shall not be used in the structure.

2005.4.3.2 Acceptance Testing Level 2

General Inspection : This shall conform to the provisions in Clause 2005.4.3.1 in all respects.

Test on specially moulded test pieces : This shall conform to the provisions in Clause 2005.4.3.1 in all respects.

Test on complete bearings : Test for determination of shear modulus shall be conducted using two bearings of the lot selected at random and conforming to relevant provisions of Clause 2005.4.3.1. These bearings shall, however, be part of the lot accepted. The remaining tests stipulated in aforesaid clause shall be carried out on two bearings selected at random which shall be excluded from the lot accepted.

2005.4.4 Special Acceptance Inspection

Special acceptance inspection shall comprise the following :

i) Acceptance testing by a NABL accredited independent external agency with separate or supplemental test facilities provided by it for polymer identification and confirmation about percentage of polymer content and ash content by TGA method.

ii) Acceptance testing on test pieces prepared from the surface or body of the test bearings instead of specially moulded test pieces.

iii) Acceptance testing on cut sample from finished bearing in order to measure thickness of individual layer of elastomer, dimension of laminates and flatness of laminates.

iv) Acceptance test at ULS condition. Bearings tested at ULS condition cannot be used in the structure as its performance at SLS condition cannot be guaranteed after such test.

v) Acceptance tests not covered by these specifications but according to the specifications laid down by the Engineer.

Special acceptance inspection may be specified under the following conditions :

a) Special contract agreement between the manufacturer and the buyer. Cost of additional bearings to be consumed for special acceptance inspection, shall be borne by buyer.

b) Evidence of unsatisfactory process or acceptance control

2005.4.5 Inspection Certificate

A lot under inspection shall be accepted by the Inspector and so certified, when no defect is found with respect to any of the quality characteristics tested on samples drawn from the lot, according to specifications laid down to Clause 2005.4.3 covering general inspection tests on specially moulded test pieces and on complete bearings.

In case any bearing is found defective, the lot shall be rejected by the Inspector and so certified.

In case any bearing is found to be defective with respect to any quality characteristic, discerned by general inspection tests specified in Clauses 2005.4.3.1 and 2005.4.3.2, tests on specially moulded test pieces and complete bearings as applicable according to those Clauses, shall nevertheless be completed. If the said lot, rejected by general inspection, satisfies the acceptance criteria in respect of these other tests, the lot and individual bearings found defective shall be clearly identified in the inspection certificate.

Immediately on completion of inspection by the Inspector authorized by the Engineer, the manufacturer shall obtain an inspection certificate which shall include the details of a lot or lots accepted/rejected by him and records of all test measurements.

2005.4.6 Quality Control Certificate

The manufacturer shall certify for each lot of bearings under acceptance that :

a) an adequate system of continuous quality control was operated in his plant.

b) the entire process remained in control during the production of the lot of bearings under acceptance, as verified from the quality control records/charts which shall be open to inspection of Engineer/Inspector on demand.

A certified copy of results of process control testing done on samples of elastomer used in the production of the lot shall be appended and shall include the following information :

Composition of compound – raw elastomer and ash content, the grade of raw elastomer used (including name, source, age on shelf), test results of hardness, tensile strength, elongation at break, compression set, accelerated ageing, etc.

A higher level certification of the process quality control shall be called for at the sole discretion of the Engineer in special cases e.g. where adequate inspection of bearings similar to those comprising the lot under inspection produced in the same plant, is not available with the Engineer or where there is any evidence of process or acceptance control being deemed unsatisfactory. The higher level certification shall comprise submittal of a complete quality control report covering tests as given in Appendix 3 of IRC:83 (Part II), supplementing the quality control certificate.

2005.4.7 Acceptance

The manufacturer shall furnish the following to Engineer for obtainingacceptance:

1) Quality control certificate as laid down in Clause 2005.4.6.
2) Inspection certificate as laid down in Clause 2005.4.5.

The manufacturer shall furnish any supplementary information on the system of quality control and/or process and acceptance control testing as may be deemed necessary by the Engineer.

In case of any evidence of process or acceptance control testing being deemed unsatisfactory by him, Engineer at his sole discretion may call for a special acceptance testing of the lot according to specifications laid down by him, without any prejudice to his right to reject the lot. The entire cost of such supplementary inspection shall be borne by the manufacturer.

The Engineer shall be the sole authority for acceptance of a lot on scrutiny of the certificates along with any supplementary evidence as mentioned in this Clause, to his complete satisfaction therewith.

In case of rejection of a lot, the Engineer shall reserve the right to call for special acceptance inspection for the succeeding lots offered for inspection, according to the specifications laid down by him. The entire cost of such tightened inspection shall be borne by the manufacturer.

2005.5 Certification and Marking

Bearings shall be transported to bridge site after final acceptance by Engineer and along with an authenticated copy of the certificate to that effect.

Each bearing shall be uniquely and individually numbered on its external faces for identification. The identification number shall be unique and such as to enable other bearings manufactured at the same time, to be traced through the production control records, should the need arise. The manufacturer's name and unique identification nurnber of the bearing should be vulcanized on the top or bottom of the bearing.

An information card giving the following details for the bearings, duly certified by the manufacturer, shall also be appended :

Name of manufacturer

Date of manufacture

Elastomer grade used

Bearing dimensions

Production batch no.

Acceptance lot no.

Date of testing

Name and specific location of bridge

Explanation of markings used on the bearing

All bearings shall have suitable index markings identifying the information. The markings shall be made in indelible ink or flexible paint and if practicable, should be visible after installation. The top of the bearing and direction of installation shall be indicated.

2005.6 Storage and Handling

Each elastomeric bearing shall be clearly labelled or marked. The bearing shall be wrapped in a cover and packed in timber crates with suitable arrangement to prevent movement and to protect corners and edges.

Care shall be taken to avoid mechanical damage, contamination with oil, grease and dirt, undue exposure to sunlight and weather of the bearings during transport and handling prior to and during installation.

2005.7 Installation

i) Bearings shall be installed in the structure as specified or approved by the Engineer to ensure that right bearing is being installed at the right location.

ii) Bearings must be placed between true horizontal surfaces (maximum tolerance 0.2 percent perpendicular to the load) and at true plan position of their control lines marked on receiving surfaces (maximum tolerance ± 3 mm).

iii) Concrete surfaces shall be free from local irregularities (maximum tolerance ± 1 mm in height).

iv) Departures from common planarity of twin or multiple bearings shall be within such tolerance as may be specified or approved by the engineer.

v) Design shall be got checked for the actual inclination in seating if larger inaccuracies than those specified are permitted.

vi) For cast in-situ concrete superstructure, where bearings are installed prior to concreting, the forms around the bearings shall be capable of easy removal. Forms shall also fit the bearings snugly and prevent any leakage of mortar/grout. Any mortar contaminating the bearings during concreting shall be completely removed before setting.

vii) Fixing of bearing to precast concrete or steel superstructure elements, shall be done by application of epoxy resin adhesive to interface, after specified surface preparation. The specifications for adhesive material, workmanship and control shall be approved by the Engineer. Care shall be taken to guard against faulty application and consequent possibility of behaviour of the adhesive layer as a lubricant. The bonding by the adhesive shall be deemed effective only as a device for installation and shall not be deemed to secure bearings against displacement for the purpose of design.

ix) Lifting of a cast in-situ post-tensioned bridge deck for relieving time dependent deformation shortly after installation of bearings, should be avoided. In case such lifting is unavoidable, the lifting arrangement, proper seating of the girder on the bearing, etc. shall be rigidly controlled to avoid any risk of misalignment.

x) Bulging of the rubber layer between the reinforcing steel laminates on free exposed perimeter under load, which is a normal phenomenon, shall be examined carefully for detecting any evidence of crack or bond failure.

xi) In case seating of bearings on a non-horizontal plane is required, it shall be carried out in accordance with acceptable practice and particular specifications as may be laid out and directed by the Engineer.

xii) As a measure of ample precaution against accidental displacement, the bearings shall be placed in a recess as shown n Fig. 9 of IRC:83 (Part II).

xiii) After installation, bearings and their surrounding areas shall be left clean.

2005.8 Maintenance

i) The maintenance of bearings shall be carried out according to a planned schedule.

ii) The structure should be designed and detailed in such a way that the bearings are easily accessible after installation for inspection and maintenance. Arrangements for insertion of jacks to lift the bridge deck shall be made in detailing of structure.

iii) The exposed bearing surface shall be maintained clean and free from contamination with grease, oil or other deleterious matter.

iv) Annual routine maintenance inspection or special maintenance inspection of all bearings shall be made to check the following aspects and results reported:

- The top and bottom load bearing surfaces shall be in full contact with the plinth (bottom supporting surface) and the soffit (top supporting surface). If there is imperfect contact between the bearing surfaces and the soffit and plinth, the angle between the soffit and plinth shall be checked against the design specifications.
- The magnitude of the shear deflection of each bearing shall be checked to ensure that it is within the design specifications.
- A visual inspection shall be made of all the accessible edges. A note shall be made of the size and position of any cracks, splits or uneven bulges.
- The plinth and soffit shall be examined for signs of displacement from original position of bearing which may be indicated by black marks left on the plinth and soffit.
- Where applicable, the sliding surfaces shall be examined for cleanliness and for any movements beyond the design range.
- Where applicable, protective coating and/or dust protection shall be examined for signs of deterioration.

v) Damaged bearings shall be replaced immediately. To avoid differences in stiffness, all adjacent bearings on the same line of support shall also be replaced.

2006 POT BEARINGS

2006.1 General

Pot bearings shall consist of a metal piston supported by a disc of unreinforced elastomer confined within a metal cylinder to take care of rotation. Horizontal movement, if required,

shall be provided by sliding surfaces of PTFE pads sliding against stainless steel mating surfaces, with a system of sealing rings. Pot bearings shall consist of cast steel assemblies or fabricated structural steel assemblies.

2006.2 Materials

2006.2.1 Structural steel, mild steel, high tensile steel and steel for forging shall conform to the requirements of Section 1009 of these Specifications.

2006.2.2 Cast steel shall comply with Grade 280-520W or 340-570W of IS:1030.

2006.2.3 Stainless steel shall conform to AISI 316 L or $O_2Cr_{17}Ni_{12}MO_2$ of IS:6911.

2006.2.4 PTFE

The raw material for PTFE used in bearings shall be pure polytetrafluoroethylene, free sintered without regenerated materials or fillers. The mechanical and physical properties of unfilled PTFE shall comply with Grade A of BS:3784 or equivalent. PTFE shall be either in the form of solid rectangular modules or large sheets with dimples formed by hot pressing or moulding. Sheet with dimples formed by machining or drilling from a solid PTFE sheet, shall not be permitted. The surface of PTFE sheets/modules which are to be in contact with metal backing plates, shall be provided with suitable chemical treatment for proper bonding. Adhesives used for bonding PTFE to backing plates, shall produce a bond with minimum peel strength of 4 N/mm width when tested in accordance with BS:5350 (Part C9).

2006.2.5 Elastomer

The elastomer to be used for the components of bearings shall comply with provisions of Table 2000-1 of this Section.

The confined elastomer inside the pot shall have the properties as given in Table 2000-4:

Table 2000-4 : Properties of Confined Elastomer

S.No.	Property	Unit	Test Method-Specification Reference	Limiting Value
1)	Hardness	IRHD	IS:3400 (Part II)	50 ± 5
2)	Min. tensile strength	MPa	IS:3400 (Part I)	15.5
3)	Min. elongation at break		As per Table 1 of IRC:83 (Part II)	
4)	Max. compression set		-do-	
5)	Accelerated aging		-do-	

2006.2.6 Composite Material

For guide of Pot bearings, composite material may be used for achieving lower coefficient of friction and higher strength. Such composite material shall consist of either (a) a bronze backing strip and a sintered inter-locking porous matrix impregnated and overlaid with a PTFE/lead mixture or (b) a mixture of PTFE, glass fibre and graphite embedded in a bronze mesh which is bonded to a galvanized steel backing strip.

2006.2.7 Seals

i) Internal seals shall be either of the following:

   a) Brass sealing ring made of metallic brass conforming to IS:410.

   b) Poly Oxy Methylene (POM) sealing chain of proven type consisting of individual interlocking elements made of moulded polyoxymethylene having properties as specified in Table 2 of IRC:83 (Part III).

ii) External seals and wiper seals shall be made of elastomer conforming to provisions of Clause 2006.2.5.

2006.2.8 Fasteners

Bolts, screws, nuts and lock nuts, shall generally conform to IS:1363, IS:1364, IS:1365, IS:2269, IS:3138, IS:6761 and IS:6639 as appropriate with mechanical properties conforming to IS:1367. Threads shall generally conform to IS:4218. Washers shall conform to IS:2016 and IS:6610 as appropriate.

2006.3 Manufacture

i) The main components of a bearing shall be cast/forged as a single monolithic body. If they are made from mild steel, they shall be machined to the desired shape from a single piece of mild steel free of laminations. No welding is permitted for manufacture of the main components of a bearing.

ii) The mating surface of the piston and cylinder of Pot bearings and that of the pin and cylinder of Pin bearings, shall be metallurgically hardened. The surface hardness shall not be less than 300 BHN.

iii) The guides shall always be monolithic with the parent component.

iv) For cast steel bearings, surfaces which will be in contact with concrete as well as non-working external surfaces of components may be kept in as-cast condition.

v) For sliding components, stainless steel sheet shall be attached to the backing plate by continuous fillet welding along the edges, in such a fashion as to ensure flatness of the stainless steel sheet throughout its service life and avoid entrapment of air and prevent ingress of moisture at the interfaces. The backing plate shall extend beyond the edges of the stainless steel sheet to accommodate the weld which should not protrude above the top of the stainless steel sheet.

vi) Suitable glue shall be used while confining the PTFE in the recesses. For large PTFE sheets sub-divided into parts, each individual part shall be confined into separate recess.

vii) For internal seal, split rings 2 mm thick and 20 mm wide made of metallic brass shall be provided in layers with staggered split positions. For elastomeric pressure pad of up to 480 mm diameter, a minimum of 2 layers of rings shall be provided, while for that above 480 mm diameter, a minimum of 3 layers of rings shall be provided.

viii) For internal seal of POM, the sealing chain made of individual interlocking elements shall be moulded as an integral part of the elastomeric pressure pad during the vulcanization process.

ix) Pre-setting of sliding element if required shall be done in the manufacturer's workshop before dispatch.

x) The bearing assembly shall be provided with temporary clamps to avoid separation of parts during transportation and installation.

xi) All welding shall be as per IS:816 and IS:9595, with electrodes as per IS:814. Preheating and post-weld stress relieving shall be done if required.

xii) Movement indicators shall be provided to facilitate routine inspection during service period.

xiii) All non-working surfaces as well as the surfaces to be in contact with the structure shall be suitably prepared by sand/shot blasting to SA 2½ quality as per IS:9954.

xiv) All non-working surfaces shall be given suitable protective coating either by painting or by zinc spraying. The total dry film thickness of protective coating shall not be less than 160 μm.

xv) Painted protective coating shall comprise of two coats of epoxy primer enriched with metallic zinc, one intermediate coat of high build epoxy paint reinforced with MIO (Micaceous Iron Oxide) and one coat of high performance epoxy finish paint as per manufacturer's specification.

xvi) Bearing components to be embedded in concrete or surfaces of any component to be in contact with concrete structure, shall be given a

coat of epoxy primer or any other suitable coating before dispatch, to prevent corrosion during transportation and storage at site. The protective coating shall be such that it will not affect the bond between the bearing component and the concrete.

xvii) Silicon grease shall be applied at the PTFE – stainless steel interface of Pot bearings.

xviii) The confined elastomeric pressure pad shall be lubricated with a suitable lubricant, which will not affect the material of the pad.

2006.3.1 Manufacturing Tolerances

2006.3.1.1 The overall dimensions of any assembled bearing or component thereof shall not exceed the tolerancelimits as given in Table 2000-5:

Table 2000-5 : Manufacturing Tolerances

S.No.	Item	Tolerances
1)	Plan dimension of assembled bearing	-0 mm to +5 mm or 0.5 percent of plan dimension whichever is higher
2)	Overall height of assembled bearing	-0 mm to +3 mm or 1 percent of overall height whichever is higher
3)	Parallelism of top surface of assembled bearing w.r.t. the bottom surface as datum	1 in 200
4)	Height of confined elastomeric pressure pad	-0 per cent to + 0.5 percent
5)	Thickness of any machined steel component	-0 mm to +1 mm
6)	Overall dimensions of any unmachined cast steel component	Class 2 of IS:4897
7)	Stainless steel sliding surface (a) Flatness (b) Surface finish	0.0004L, where L= length in direction of movement Ra≤0.25 μm as per IS:3073

2006.3.1.2 The tolerance on flatness of PTFE shall be 0.2 mm where the diameter or diagonal is less than 800 mm and 0.025 per cent of the diameter or diagonal where this dimension is greater than or equal to 800 mm. On PTFE surfaces made up of more than one piece of PTFE the above conditions shall apply to the diameter or diagonal dimension of the inscribing circle or rectangle around the PTFE. The tolerance of centre-to-centre distance of

dimples, depth of dimples arid diameter of dimples for dimpled PTFE sheet shall be ±0.5 mm, ±0.5 mm and ±1.0 mm respectively.

2006.3.1.3 The dimensional tolerances of confined PTFE shall be as given in Table 2000-6. The gap between the edge of the PTFE sheet and the edge of the recess in which it is confined, shall not anywhere exceed 0.5 mm or 0.1 per cent of the corresponding plan dimensions of the PTFE sheet, in the direction measured, whichever is greater, but in no case shall exceed 1 mm, The profile tolerance on the specified projection of PTFE above its confining recess shall be as given in Table 2000-6.

Table 2000-6: Dimensional Tolerance of Confined PTFE and Profile Tolerance of its Projection

Maximum Dimension of PTFE (Diameter or Diagonal) (mm)	Tolerance on Plan Dimension (mm)	Tolerance on Thickness (mm)	Tolerance on Specified Projection above Recess (mm)
<600	±1.0	-0 to +0.5	-0 to +0.5
>600, ≤1200	±1.5	-0 to +0.6	-0 to +0.6
>1200, ≤1500	±2.0	-0 to +0.7	-0 to +0.8

2006.3.1.4 Tolerance of Fit

Tolerance of fit between different components of bearings shall be as follows:

i) For Pot bearings the tolerance of fit between the piston and cylinder shall be +0.75 mm to +1.25 mm.

ii) For Pot bearings the tolerance of fit between the confined elastomeric pressure pad and cylinder shall not exceed 0.5 percent of the diameter of the pad or 1 mm, whichever is higher.

iii) For Pin bearings the tolerance of fit between the pin and cylinder shall be + 1.5 mm to +2 mm. Manufacturing tolerances of the contact surfaces of pin and cylinder shall be as per h11 and H11 of IS:919 respectively.

iv) The tolerance of fit between guide(s) and adjacent-component shall be +2 mm to +4 mm.

2006.4 Inspection and Testing

i) Inspection and testing shall consist of the following actions:

a) Inspection and testing of raw materials

b) Process inspection

c) Inspection and testing of finished bearings

ii) The manufacturer shall have all test facilities required for process and acceptance control tests, installed at his plant to the complete satisfaction of the Inspector appointed by the Engineer. The test facilities and their operation shall be open for inspection by the Inspector at any time.

iii) A testing programme shall be drawn up and submitted by the manufacturer to the Inspector and his approval obtained before commencement of testing. All tests on raw materials and finished bearings shall be carried out at the manufacturer's workshop as per procedures laid out in this Section. All the test reports duly certified by the Inspector shall be furnished by the manufacturer at the time of dispatch of the bearing from the workshop.

iv) Routine test covering all the three items mentioned in i) above shall be carried out by the manufacturer for the bearings of each lot under acceptance. In addition, type test covering items b) and c) of i) above shall be carried out on bearings of each type and load capacity, selected at random by the Inspector, one for each lot. The size of each lot for similar type of bearings shall be 25 nos. or part thereof. Each type of bearing shall be treated as a separate lot. The Inspector may also carry out random tests on raw materials on samples drawn by the manufacturer, in which case the identification and marking of the sample will be done in the presence of the Inspector.

v) A detailed quality control report of routine tests shall be furnished by the manufacturer to the Inspector, for each lot of bearings offered for inspection.

2006.4.1 Tests on Raw Materials

Tests on raw materials as per relevant material standards, shall be carried out by the manufacturer in accordance with stipulations in Appendix 2 of IRC:83 (Part III).

2006.4.2 Process Inspection/Tests

i) Test on welding shall consist of DP test and visual inspection as per IS:822.

ii) The hardness of all major steel components shall be tested to determine the Brinnel Hardness Number (BHN), which shall be not less than 120 BHN for mild steel and 150 BHN for cast steel and forged steel.

iii) All major metallic components shall be ultrasonically tested as per Level 3 of IS:9565.

iv) The surface hardness of the mating interface shall be checked in accordance with the requirement specified in Clause 2006.3 ii).

v) Corrosion protection shall be checked in accordance with the requirement specified in Clause 2006.3 xiv).

vi) In case any of the acceptance control tests are deemed to be unsatisfactory by the Inspector, complete bearing or particular component(s) of the entire lot may be rejected, depending on the cause of rejection i.e. if the test of any material is unsatisfactory, the component involving that material shall be rejected for the entire lot; but if a finished bearing fails in load test, the complete bearing shall be rejected and all the bearings of that type and load capacity, shall be load tested before acceptance. If the result of process inspection is unsatisfactory, proper rectification measures shall have to be adopted by the manufacturer and the acceptance tests shall be repeated.

2006.4.3 Inspection/Test of Finished Bearings

i) All bearings of the lot shall be visually inspected for any defects in surface finish, shape or any other discernible superficial defects.

ii) All bearings shall be checked for overall dimensions as per manufacturing tolerances specified in Clause 2006.3.1.

iii) At least one or a pair of bearings of each type and different vertical load capacity, selected at random, shall be load tested. For Pot and PTFE bearings, the test load shall be 1.25 times the design vertical load while that for Pin and Metallic Guide Bearings, it shall be 1.25 times the specified design horizontal load. Additionally, for testing of Pot and PTFE bearings under a combination of loads acting in different axes, the test loads shall be 1.1 times the respective design loads. The test load shall be applied in stages and held for 30 minutes. For Pot bearings, the vertical deflection under sustained test load shall not increase by more than 4% of the thickness of the confined elastomeric pressure pad. The load shall then be removed and the bearing dismantled for visual examination.

iv) Visual examination of the test bearing shall be carried out both during and after the test. Any visual defects, such as physical damage, cold flow of PTFE resulting in reduction of height by more than 0.5 mm, damage of internal seal and/or extrusion of the confined elastomeric pressure pad for Pot bearing, defects/cracks at metal to metal contact surfaces, shall lead to rejection of the bearing.

v) For bearings with sliding components, friction test shall be performed on properly lubricated PTFE-stainless steel sliding surface at constant vertical load equal to the design vertical load as well as the permanent vertical load. Horizontal load shall be applied till sliding occurs. Coefficient of friction (μ) shall be determined on the basis of applied vertical and

horizontal loads and shall not exceed two-thirds of the value specified in Table 2000-7, depending on the actual average pressure on PTFE due to the applied vertical load.

Table 2000-7 : Coefficient of Friction for Stainless Steel Sliding on Properly Lubricated PTFE

Average Pressure on Confined PTFE (MPa)	Maximum Coefficient of Friction
5	0.08
10	0.06
20	0.04
≥ 30	0.03

vi) Rotation test shall be performed on Pot bearing with properly lubricated elastomeric pressure pad for design rotation under a constant vertical load equal to the permanent vertical load.

2006.4.4 Certification and Marking

i) Bearings should be transported to bridge site after final acceptance by the Inspector/inspection agency appointed by the concerned authority, along with an authenticated copy of the certificate of acceptance. An information card listing the required bearing characteristics, duly certified by the manufacturer should also be appended with the certificate.

ii) All bearings shall have suitable index markings in indelible ink or flexible paint, which if practicable, shall be visible even after installation, giving the following information:

- Name of manufacturer
- Month and year of manufacture
- Bearing designation
- Type of bearing
- Load and movement capacity
- Centre line markings to facilitate installation
- Direction of major and minor movement, if any
- Preset, if any

2006.5 Installation

2006.5.1 General

i) Bearings shall be so located as to avoid the accumulation of dirt and debris on or around them. Detailing of the structure shall be such that water is prevented from reaching the bearings.

ii) In order to avoid contamination of moving surfaces, bearings should not normally be dismantled after leaving the manufacturer's workshop. However, if for any reason, a bearing is required to be dismantled, it shall be done only under expert supervision for which the manufacturer's help may be sought.

iii) Transfer of load from the superstructure to the bearings should not be allowed until the bedding material has developed sufficient strength. Temporary clamping devices should be removed at the appropriate time before the bearings are required to accommodate movement. The holes exposed on removal of temporary transit clamps should be filled with selected material. Where re-use of these fixing holes may be required, the material used for filling the holes should be capable of being easily removed without damaging the threads.

iv) Suitable temporary supporting arrangements under bearing base plates should be made to accommodate thermal movement and elastic deformation of the incomplete superstructure. Such temporary supports, if provided, should be removed once the bedding material has reached its required strength. Any voids left as a consequence of their removal should be made good using the same bedding material. Steel folding wedges and rubber pads are suitable for use as temporary supports under bearing plates.

2006.5.2 Bedding

i) The bedding material shall be selected keeping in view a number of factors such as the type and size of bearing, construction sequence, load on the bearing, required setting time, friction requirements, access around bearings, design and condition of surface in the bearing area and thickness, strength and shrinkage of bedding material.

ii) Commonly used bedding materials are cementitious or chemical resin mortar and grout. In some cases, it may be necessary to carry out trials to ascertain the most suitable material.

iii) The bedding material, whether above or below the bearing, should extend over the whole area of the bearing in order to ensure even loading. After installation, there shall be no voids or hard spots. The top surface of any extension of the bedding beyond the bearing shall have a downward slope away from the bearing.

iv) The bedding material shall be capable of transmitting the applied load to the structure without being damaged. Surfaces to receive bedding mortar shall be suitably prepared so as to be compatible with the mortar chosen.

2006.5.3 Fixing of Bearings

i) Bearings should be anchored in order to counter vibration and accidental impact. Anchorage should be accurately set into recesses cast into the structure using templates. The remaining space in the recesses should be filled with material capable of withstanding the loads.

ii) Bearings that are to be installed on temporary supports should be firmly fixed to the substructure by anchorage or other means to prevent disturbance during subsequent operations. Voids beneath the bearings should be completely filled with bedding material using the appropriate method.

iii) Bearings may be fixed directly to metal bedding plates that may be cast in or bedded on top of the supporting structure to the correct level and location.

iv) If the structure is of steel, the bearings may be bolted directly onto it. Care shall be taken to ensure that there is no mismatch between the bolt holes of the structure and those of the bearing.

v) Threaded fasteners shall be tightened uniformly to avoid overstressing of any part of the bearing.

2006.5.4 Bearings Supporting In-situ Concrete Deck

i) Where bearings are installed prior to casting of an in-situ concrete deck, formwork around bearings should be properly sealed to prevent grout leakage. It is essential that the bearings and particularly the working surfaces are protected during concreting operations. Sliding plates should be fully supported and care taken to prevent tilting, displacement or distortion of the bearings under the weight of green concrete. Any mortar contaminating the bearings should be completely removed before it sets.

ii) For bearings supporting precast concrete or steel beams, a thin layer of synthetic resin mortar should be used between bearings and the beams. Bearings shall be bolted to anchor plates or sleeves embedded in precast concrete elements or to machined sole plates on steel elements.

2006.5.5 Installation Tolerances

Bearings shall be located so that their centre lines are within ± 3 mm of their correct position. The level of a bearing or the mean levels of more than 1 bearing at any support, shall be within a tolerance of ± 0.0001 times the sum of the adjacent spans of a continuous girder, but not exceeding ± 5 mm. Bearings shall be placed in a horizontal plane within a tolerance of 1 in 200 in any direction, even under superstructure in gradient.

2006.6 Maintenance

i) Bearings shall be designed and manufactured to make them maintenance free so as to withstand undesirable effects caused by extreme atmosphere or aggressive environmental conditions/ unforeseen events.

ii) Suitable easy access to the bearings shall be provided for inspection and maintenance. Provision shall also be available for jacking up the superstructure so as to allow repair/replacement of bearings.

iii) The area surrounding the bearings shall be kept clean and dry to avoid damage to the bearings. The bearings shall also be periodically cleaned to remove deposits of salts, debris, dust or other foreign material.

iv) Periodic inspection and nominal maintenance of bearings shall be carried out in order to ensure their better performance and longer life. The bearings are required to be inspected at intervals of one year for the first five years after installation and at intervals of two years thereafter.

v) The bearings shall also be examined carefully after unusual occurrences such as passage of heavy traffic/oversized loads, earthquakes and battering by floating debris in high floods.

2007 INSPECTION AND TESTING

Where any patented items are used, the manufacturer's certificate for the same with test proofs shall be submitted along with the design and got approved by the Engineer before their use in work.

2008 TEST AND STANDARDS OF ACCEPTANCE

The materials shall be tested in accordance with these Specifications and shall meet the prescribed criteria.

The work shall conform to these Specifications and shall meet the prescribed standards of acceptance.

2009 MEASUREMENTS FOR PAYMENT

Bearings shall be measured in numbers, according to their capacities and particular specifications given on the drawings.

The quantity of elastomeric bearings shall be measured in cubic centimetres of finished dimensions.

2010 RATE

The contract unit rate of each type of bearing shall include the cost of manufacturing, supplying and fixing the bearings in position complete as specified on the drawings or as directed by the Engineer.

The rate shall also include the cost of samples and their testing as required under the specifications or as directed by the Engineer.

In case of steel bearings the rate shall include the cost of all nuts, bolts and all tests prescribed in the specifications and shown on the drawings.

2100

OPEN FOUNDATIONS

2101 DESCRIPTION

The work shall cover furnishing and providing plain or reinforced concrete foundation placed in open excavation, in accordance with the drawings and these Specifications or as directed by the Engineer.

2102 MATERIALS

Materials shall conform to Section 1000 of these Specifications.

2103 GENERAL

A method statement indicating the following shall be submitted by the Contractor for approval of the Engineer, well in advance of the commencement of construction of open foundation :

i) Sources of materials
ii) Design, erection and removal of formwork
iii) Production, transportation, laying and curing of concrete
iv) Personnel employed for execution and supervision
v) Tests and sampling procedures
vi) Equipment details
vii) Quality Management System to be adopted including Quality Manual
viii) Any other relevant information

Details of necessary arrangements for execution under water wherever necessary, shall be included in the method statement.

Dimensions, lines and levels shall be set out and checked with respect to permanent reference lines and permanent bench mark so that the foundations are located correctly and in accordance with the drawings.

Formwork, steel reinforcement and structural concrete for open foundations shall conform to Sections 1500, 1600 and 1700 respectively of these Specifications.

2104 WORKMANSHIP

2104.1 Preparation of Foundations

Excavation for laying the foundation shall be carried out in accordance with Section 300 of these Specifications. The last 300 mm of excavation shall be done just before laying of lean concrete below foundation. Excavation shall be made only to the exact depth as shown on the drawing. In the event of excavation having been made deeper than that shown on the drawing or as ordered by the Engineer, the extra depth shall be made up with M10 concrete in case of foundation resting on soil and with concrete of the same grade as that of the foundation, in case of foundation resting on rock. This shall be done at the cost of the Contractor and shall be considered as incidental to the work.

Open foundations shall be constructed in dry conditions and the Contractor shall provide for adequate dewatering arrangements, wherever required, to the satisfaction of the Engineer.

Where light blasting is required for excavation in rock or other hard strata, the same shall be carried out in accordance with Clause 302 of these Specifications. Where blasting is likely to endanger adjacent foundations or other structures, controlled blasting with all necessary precautions shall be resorted to.

2104.2 Setting Out

The plan dimensions of the foundation shall be set out at the bottom of foundation trench and checked with respect to original reference line and axis.

2104.3 Construction

i) Excavation for open foundations shall be carried out in accordance with Section 300 of these Specifications. For guidance regarding safety precautions to be taken, IS:3764 may be referred.

ii) For foundation resting on soil, a layer of M10 concrete of minimum thickness 100 mm shall be provided above the natural ground to provide an even surface to support the foundation concrete. Before laying of lean concrete layer, the earth surface shall be cleaned of all loose material and wetted. Care shall be taken to avoid muddy surface. If any part of the surface has become muddy due to over-wetting, the same shall be removed. If required, the M10 concrete may be laid to a thickness of more than 100 mm, as per the direction of the Engineer. No construction joint shall be provided in the lean concrete. For foundations resting on rock, the rock surface shall be cleaned of any lose material and then levelled with a layer of concrete of the same grade as that of the foundation, so as to provide an even surface.

iii) No point of the surface of the lean concrete, in the case of foundation on soil or the surface of hard rock, in the case of foundation on hard rock, shall be higher than the founding level shown on the drawing or as ordered by the Engineer. Levels of the surface shall be taken at intervals of not more than 3 metres centre-to-centre in each direction, subject to a minimum of nine levels on the surface.

iv) No formwork is necessary for the lean concrete layer. Side formwork shall be used for foundation concrete work. When concrete is laid in slope without top formwork, the slump of the concrete shall be carefully maintained to ensure that compaction is possible without slippage of freshly placed concrete down the slope. In certain cases it may be necessary to build the top formwork progressively as the concreting proceeds up the slope. Reinforcement shall be laid as shown on the drawing.

v) Before laying foundation concrete, the lean concrete or hard rock surface shall be cleaned of all loose material and lightly moistened. Foundation concrete of required dimensions and shape shall be laid

continuously up to the location of construction joint shown on the drawing or as directed by the Engineer.

vi) The concrete surface shall be finished smooth with a trowel. The location of construction joint and its treatment shall be done as per requirements of Section 1700 of these Specifications. Formwork shall not be removed earlier than 24 hours after placing of concrete. Where formwork has been provided for top surface, the same shall be removed as soon as concrete has hardened. Curing of concrete shall be carried out by wetting of formwork before removal. After its removal, curing shall be done by laying not less than 100 mm thickness of loose moistened sand free from clods or gravel, over the concrete. The sand shall be kept continuously moist for a period of 7 days. Before backfilling is commenced, the loose sand shall be removed and disposed ofas directed by the Engineer.

vii) Normally, open foundations shall be laid dry. Where dewatering is necessary for laying of concrete, it shall be carried out adopting any one of the following methods or any other method, approved by the Engineer:

a) A pit or trench of suitable size, deeper than the founding level as necessary, is dug beyond the foundation excavation so that the water flows into it and the excavated surface at founding level is fully drained.

b) Water table is depressed by well point system or other methods.

c) Steel/concrete caissons or sheet piling are used for creating an enclosure for the foundations, which can subsequently be dewatered.

No pumping of water shall be permitted from the time of placing of concrete up to 24 hours after placement.

viii) In situations where foundations cannot be laid dry or where percolation is too heavy to keep foundation strata dry, concrete may be laid under water only by tremie. In case of flowing water or artesian spring, the flow shall be stopped or reduced to the feasible extent at the time of placing the concrete.

ix) Where blasting is required, it shall be carried out in accordance with Section 300 of these Specifications, observing all precautions indicated therein. Where blasting is likely to endanger adjoining foundations or other structures, necessary precautions such as controlled blasting, providing rubber mat cover to prevent flying of debris etc., shall be taken to prevent any damage.

x) All spaces excavated and not occupied by the foundations or other permanent works shall be refilled with earth up to surface of surrounding ground with sufficient allowance for settlement. All backfill shall be thoroughly compacted and in general, its top surface shall be neatly graded. Backfilling shall be in accordance with Section 300 of these Specifications.

xi) In case of excavation in rock, the annular space around the footing shall be filled with M15 concrete up to the level of top of rock. Filling with M15 concrete shall also be carried out for excavations having depth up to 1.5 m in ordinary rock or 0.6 m in hard rock. In case, the excavations are even deeper so as to require further filling up to the level of top of rock, the same shall be done by boulders grouted with cement.

xii) Protective works, where provided shall be completed before the onset of floods so as to avoid the risk of the foundation getting undermined.

2105 TESTS AND STANDARDS OF ACCEPTANCE

The materials shall be tested in accordance with these Specifications and shall meet the prescribed criteria.

The work shall conform to these Specifications and shall meet the prescribed standards of acceptance.

2106 TOLERANCES

a)	Variation in dimensions	: +50 mm, -10 mm
b)	Misplacement from specified position in plan	: 15 mm
c)	Surface unevenness measured with 3 m straight edge	: 5 mm
d)	Variation of levels at the top	: ± 25 mm

2107 MEASUREMENT FOR PAYMENT

Excavation in foundation shall be measured in cubic metres in accordance with Section 300 of these Specifications, based on the quantity ordered or as shown on the drawing.

Lean concrete shall be measured in cubic metres in accordance with Section 1700 of these Specifications, based on the quantity ordered or as shown on the drawing.

Concrete in foundation shall be measured in cubic metres in accordance with Section 1700 of these Specifications, based on the quantity ordered or as shown on the drawing.

Reinforcement steel shall be measured in tonnes in accordance with Section 1600 of these Specifications, based on the quantity ordered or as shown on the drawing.

2108 RATE

The contract unit rates for excavation in foundation, lean concrete, including dewatering and blasting where required, concrete in foundation and reinforcement steel shall include all works as given in respective Sections of these Specifications and cover all incidental items for furnishing and providing open foundation as mentioned in this Section and as show on the drawings.

2200

SUBSTRUCTURE

2201 DESCRIPTION

The work shall cover furnishing and providing masonry or reinforced concrete substructure in accordance with the drawings and as per these Specifications or as directed by the Engineer.

2202 MATERIALS

Materials shall conform to **Section 1000** of these Specifications.

2203 GENERAL

2203.1 A method statement for construction indicating the following shall be submitted by the Contractor for approval of the Engineer, well in advance of the commencement of substructure:

i) Sources of materials,

ii) Design, erection and removal of formwork,

iii) Production, transportation, laying and curing of concrete,

iv) Personnel employed for execution and supervision,

v) Tests and sampling procedures,

vi) Equipment details,

vii) Quality Management System to be adopted including Quality Manual

viii) Safety measures

ix) Any other relevant information.

Arrangements for execution under water wherever necessary, shall be included in the method statement.

2203.2 Dimensions, lines and levels shall be set out and checked with respect to permanent reference lines and permanent bench mark so that the substructure is constructed in accordance with the drawings.

2203.3 Brick masonry, stone masonry, formwork, steel reinforcement and concrete for piers, abutments, pier caps, abutment caps, dirt walls, return walls and wing walls shall conform to Sections 1300, 1400, 1500, 1600 and 1700 respectively of these Specifications.

2204 PIERS AND ABUTMENTS

2204.1 For concrete piers, horizontal construction joints shall be avoided as far as possible, by pouring the entire required concrete in one operation. Where construction

joints are unavoidable, they shall be treated in accordance with Section 1700 of these Specifications or in accordance with special provisions as directed by the Engineer. No vertical construction joint shall be permitted.

Construction joints shall not be permitted in splash zones.

The work shall be strictly in accordance with the drawings or as directed by the Engineer.

2204.2 In case of tall piers and abutments, use of slipform shall be preferred. The design, erection and raising of slipform shall be subject to special specifications which will be furnished by the Contractor. The concrete shall also be subjected to additional specifications as necessary. All specifications and arrangements for use of slipform and placing of concrete therein shall be subjected to the approval of the Engineer.

2204.3 The top surface of foundation/well cap/pile cap over which new concrete is to be laid, shall be scraped with wire brush and all loose materials removed. In case reinforcing bars projecting from foundations are coated with cement slurry, the same shall be removed by tapping, hammering or wire brushing. Care shall be taken to remove all loose materials around reinforcements. Just before commencing masonry or concrete work, the surface shall be thoroughly wetted.

2204.4 In case of solid (non-spill through type) abutments and hollow concrete piers, weep holes as shown on the drawings or as directed by the Engineer, shall be provided in conformity with Clause 2706 of these Specifications.

2204.5 The surface finish shall be smooth, except onthe earth face of abutments which shall be rough finished.

2204.6 In case of abutments likely to experience considerable movement on account of earth pressure from backfill of approaches and settlement of foundations, the construction of the abutment shall be followed by filling up of embankment in layers to the full height to allow for the anticipated movement during construction. Casting of superstructure resting on the abutment shall be taken up only thereafter.

2205 PIER CAP AND ABUTMENT CAP

2205.1 The locations and levels of pier cap, abutment cap, pedestals and bolts for fixing bearings, shall be checked carefully to ensure alignment in accordance with the drawings.

2205.2 The surface of cap shall be finished smooth and shall have a slope for draining off water as shown on the drawings or as directed by the Engineer. For short span slab bridges with continuous support on pier caps, the surface shall be cast horizontal. The top surface of the pedestal on which bearings are to be placed shall also be cast horizontal.

2205.3 The surface on which elastomeric bearings are to be placed shall be wood float finished to a level plane which shall not vary more than 1.5 mm from straight edge placed in any direction across the area. The surface on which other bearings (steel bearings, pot bearings) are to be placed shall be cast about 25 mm below the bottom level of bearings or as indicated on the drawings.

2206 DIRT WALL, RETURN WALL AND WING WALL

2206.1 In case of cantilever return walls, no construction joint shall be permitted. The dirt wall and cantilever return walls shall be cast in one operation.

2206.2 For gravity type masonry and concrete return and wing wall, the surface of foundation shall be prepared in the same manner as that prescribed for construction of abutment. No horizontal construction joint shall be provided. Vertical construction joint may be provided, if shown on the drawing or as directed by the Engineer.

2206.3 Vertical expansion gap of 20 mm shall be provided in return wall/wing wall at every 10 metre intervals or as directed by the Engineer. The 20 mm gaps shall be filled with suitable type of asphaltic/bituminous board, so as to prevent embankment material from coming out. The cost of such board shall be borne by the Contractor and shall be incidental to the work.

2206.4 For masonry/concrete return walls and wing walls, weep holes shall be provided as prescribed for abutments or as shown on the drawings.

2206.5 The finish of the surface on the earth side shall be rough while that of the front face shall be smooth.

2206.6 Coping for wing wall/return wall in brick masonry/stone masonry shall conform to **Section 1300** of these Specifications.

2207 TESTS AND STANDARDS OF ACCEPTANCE

2207.1 The materials shall be tested in accordance with these Specifications and shall meet the prescribed requirements.

2207.2 The work shall conform to these Specifications and shall meet the prescribed standards of acceptance.

2208 TOLERANCES IN CONCRETE ELEMENTS

a)	Variation in cross-sectional dimensions	:	+10 mm, -5 mm
b)	Misplacement from specified position in plan	:	10 mm

c)	Variation of levels at the top	:	±10 mm
d)	Variations of reduced levels of bearing areas	:	± 5 mm
e)	Variations from plumb over full height	:	±10 mm
f)	Surface unevenness measured with 3 m straight edge		
	All surfaces except bearing areas	:	5 mm
	Bearing areas	:	3 mm

2209 MEASUREMENTS FOR PAYMENT

2209.1 Masonry in substructure shall be measured in cubic metres in accordance with Section 1300 or Section 1400 of these Specifications, based on the quantities ordered or as shown on the drawings.

2209.2 Concrete in substructure shall be measured in cubic metres in accordance with Section 1700 of these Specifications, based on the quantity ordered or as shown on the drawings. No deduction shall be made for weep holes.

2209.3 Steel in concrete of substructures shall be measured in tonnes, in accordance with Section 1600 of these Specifications, based on the quantity ordered or as shown on the drawings.

2209.4 Weep holes shall be measured as per Section 2700 of these Specifications, based on the numbers provided or as shown on the drawings.

2210 RATE

The contract unit rates for masonry, concrete, reinforcement and weep holes shall include all works as given in respective Sections of these Specifications and cover all incidental items for furnishing and providing substructure as mentioned in these Specifications and shown on the drawings.

2300

CONCRETE SUPERSTRUCTURE

2301 DESCRIPTION

The work shall cover furnishing and providing of concrete superstructure in accordance with the drawings and as per these Specifications or as directed by the Engineer.

2302 MATERIALS

Materials shall conform to Section 1000 of these Specifications.

2303 GENERAL

2303.1 A method statement for construction, indicating the following, shall be submitted by the Contractor for approval of the Engineer, well in advance of the commencement of the construction of superstructure.

i) Sources of Materials
ii) Design, erection and removal of formwork
iii) Production, transportation, laying and curing of concrete
iv) Prestressing system, if applicable
v) Personnel employed for execution and supervision
vi) Tests and sampling procedure
vii) Equipment details
viii) Quality Management System to be adopted including Quality Manual
ix) Safety measures
x) Any other relevant information

2303.2 Dimensions, lines and levels shall be set out and checked with respect to permanent reference lines and permanent bench mark so that the completed superstructure is in full accordance with the drawings and as approved by the Engineer.

2303.3 The formwork, steel reinforcement, structural concrete and prestressing for concrete superstructure shall conform to Section 1500, Section 1600, Section 1700 and Section 1800 respectively, of these Specifications.

2303.4 Specifications with regard to some of the common types of concrete superstructure construction shall be as given in subsequent Clauses of this Section.

2304 REINFORCED CONCRETE CONSTRUCTION

2304.1 Solid Slabs

Where adjacent span of slab has already been cast, the expansion joint and filler board shall be placed abutting the already cast span, which shall form the shutter on that side of the new

span to be cast. The reinforcement for the road kerb and railings embedded in the slab shall be tied in position before casting of slab. The entire slab shall be cast in one go. Where the slab is continuous over two spans or more, the entire span of the first slab and the length of the slab in the next adjacent span up to the point of contraflexure, shall be cast in one go, the same sequence of concreting being repeated for additional spans as required.No other construction joint shall be allowed except with the express permission of the Engineer. In very wide slabs, however, longitudinal construction joints may be permitted with the approval of the Engineer. Constructions joints, if provided, shall be made in the prescribed manner as per Clause 1710 of these Specifications.

The portions of solid slab near expansion joints shall be cast along with reinforcements and embedments for expansion joints. For this purpose, the portion of solid slab near expansion joints may be cast in a subsequent stage, if permitted by the Engineer.

Where wearing coat is required to be provided after the slab has been cast, the surface of the slab shall be finished rough, but true to lines and levels as shown on the drawings, before the concrete has hardened.

The top of the slab shall be covered with clean moist sand as soon as the surface has hardened. Curing shall be carried out as per Section 1700 of these Specifications.

If bearings are provided for the solid slab, the same shall be placed in position in accordance with the drawings, before casting of slab.

2304.2 RCC T-Beam and Slab

Provision of construction joint shall conform to the drawings or as per directions of the Engineer. No construction joint shall be provided between the bottom bulb and the web. If not indicated on the drawing, construction joint may be provided at the junction of the web and the fillet between the web and the deck slab, with the approval of the Engineer.

The portions of deck slab near expansion joints shall be cast along with reinforcements and embedments for expansion joints. For this purpose, the portion of deck slab near expansion joints may be cast in a subsequent stage, if permitted by the Engineer.

The surface of the deck slab shall be finished rough but true to lines and levels as shown on the drawings before the concrete has hardened. Care shall be taken for setting of bearings as indicated on the drawings.

2305 PRESTRESSED CONCRETE CONSTRUCTION

2305.1 PSC Girder and Composite RCC Slab

PSC girder may be precast or cast in-situ as mentioned on the drawing or as directed by the Engineer. Girders may be post tensioned or pre-tensioned. Where precast construction is

required to be adopted, selection of casting yard and details of methodology and equipment for shifting and launching of girders, shall be included in the method statement.

In case of cast in-situ construction, the sequence of construction including side shifting of girders, if required, and placing on bearings shall be in accordance with the drawings.

The PSC girder constituting the top flange, web and bottom flange shall be concreted in a single operation without any construction joint.

The portions of deck slab near expansion joints shall be cast along with reinforcements and embedments for expansion joints. For this purpose, the portion of deck slab near expansion joints may be cast in a subsequent stage, if permitted by the Engineer.

The surface of the deck slab shall be finished rough but true to lines and levels as shown on the drawings before the concrete has hardened.

Care shall be taken for correct alignment and setting of bearings as indicated on the drawings.

2305.2 Box Girder

Box girders may be simply supported or continuous. Simply supported box girders shall have minimum construction joints as approved by the Engineer. In the case of continuous box girders, the sequence of construction and location of construction joints shall be strictly in accordance with the drawings.

The box section shall be constructed with only one construction joint located in the web below the fillet between the deck slab and the web.

The portions of deck slab near expansion joints shall be cast along with reinforcements and embedments for expansion joints. For this purpose, the portion of deck slab near expansion joints may be cast in a subsequent stage, if permitted by the Engineer.

The surface of the deck slab shall be finished rough but true to lines and levels as shown on the drawings before the concrete has hardened. Care shall be taken for setting of bearings as indicated on the drawings.

2305.3 Segmental Construction

Where segments are cast in-situ using form travellers, continuity of untensioned reinforcement from one segment to the next must be ensured by providing full lap length as necessary.

It shall be ensured that the load of equipment as well as construction live load as taken in the design, are not exceeded during construction.

Pre-cambering of the superstructure during construction shall be done in such a manner that the finally constructed structure under permanent load attains the final profile intended in the drawings.

2305.3.1 Grades of Concrete

Minimum grades of concrete, minimum cement content, maximum water-cement ratio and other durability requirements shall be as indicated in Tables 1700-2 and 1700-3 of these Specifications.

2305.3.2 Precasting

All sides, bottom inside and header forms shall be of steel. Forms shall be of sufficient thickness, with adequate external bracing and shall be stiffened and adequately anchored to withstand the forces due to placement and vibration of concrete. Compaction of concrete may be achieved through needle vibrators or form vibrators along with needle vibrators.

For casting of precast segments, any of the two commonly used techniques of precasting viz. Long Line method or Short Bench method may be used. After the first segment of each unit is cast, succeeding segments shall be match cast against the previous ones and shall be given a unique identification mark so that it is placed at the intended locations in the superstructure. A bond breaking material such as flax, soap, talc, wax or any other approved material shall be used between previously cast segment and newly cast segments, as well as the end headers, where required.

Segments shall not be moved from the casting yard until stipulated strength requirements have been met. They shall be supported in a manner that will minimize warping. Under all circumstances, the concrete shall have attained a minimum compressive strength of 20 MPa at the time of removal of forms. At the time of lifting and assembly of precast segments, the concrete shall have attained sufficient strength to withstand the handling stresses. Curing of segments may be achieved through water curing or steam curing followed by water curing. Approved curing compound may also be used.

In case of spliced girder system, match casting is not necessary because the gap between the girder segments is filled with concrete or epoxy material at the location of splices. The faces which are required to receive the cast-in-situ stitch concrete, shall be adequately roughened and prepared as construction joint before pouring the stitch concrete. In case of epoxy jointed spliced girder system (with no gap between the girder segments), match casting shall be resorted to and all provisions of epoxy jointed segmental structure shall apply.

A full scale mock-up of the lifting and holding equipment (including assembly truss, cantilevering formwork etc.) shall be performed to demonstrate their adequacy and efficacy prior to start of erection/assembly of the segments.

2305.3.3 Tolerances in Precasting

Finished segment tolerances should not exceed the following:

Length of match-cast segment (not cumulative)	:	± 5 mm
Overall span length between bearings	:	± 10 mm
Web thickness, depths of top and bottom flanges, width of top and bottom flanges, overall depth of segment, thickness of diaphragm	:	± 5 mm
Grade of edge and and soffit	:	± 1 mm/m
Tendon hole location	:	± 3 mm
Position of shear keys	:	± 5 mm

2305.3.4 Shear Keys

Shear keys covering as much area of the cross-section as possible, shall be provided at match cast joints of precast segments. Shear keys in the webs shall be smaller in size and more in number than those in top flange and bottom flange, which may have larger sizes and lesser numbers. Shear keys shall be dimensioned in the form of trapezium and shall be located away from tendon holes. In case of spliced girder superstructure, where match casting is not used, large amplitude shear keys may be used.

2305.3.5 Epoxy Jointing of Segments

For epoxy jointed superstructure, mating surfaces of both adjoining segments shall be effectively prepared by wire brushing, water jetting or any other approved means to ensure that bond breaking material is completely removed. Epoxy of about 1 mm thickness shall be applied (usually by hand) on each of the mating surfaces. The epoxy should not have crossed 70 percent of its shelf life at the time of application. The segments shall then be brought in contact and an axial temporary compression of at least 0.3 MPa shall be applied by approved means for a minimum of 24 hours. The erection system shall be so planned by the Contractor that the time elapsed between mixing of components of epoxy and application of temporary axial surface, does not exceed 60 minutes. No epoxy from a batch for which the time since combining the components, has exceeded 20 minutes, shall be used.

2305.3.5.1 Sequence of Operation

The broad sequence of operations shall generally comprise placing of all segments which are to be assembled and prestressed in one stage touching each other and then visually examining the matching of mating surfaces. Subsequently, each segment shall be separated from adjoining segment by a distance just sufficient to enable application of the epoxy. The temporary axial compression shall then be imparted and maintained for a minimum of 24 hours.

Thereafter, intended permanent prestress shall be imparted prior to demobilizing the temporary axial prestress.

2305.3.5.2 Epoxy

Depending on the ambient temperature range, the following types of epoxies may be used:

5° to 20° Celsius	:	Fast reacting
15° to 30° Celsius	:	Medium fast reacting
25° to 40° Celsius	:	Slow reacting

Resin, which is one component of the epoxy, must be stirred by a mixer in its container for about 10 seconds or until homogeneity is achieved. Thereafter, the hardener which is the second component, must be added and mixing continued. For a mix of 5 kg batch, a mixing rotor attached to 350 W, 400 rpm electric hand drilling machine may be used. The speed of revolution should not exceed 400 rpm in order to avoid entrapment of air and excessive frictional heat leading to shorter pot life. The mixing time should not exceed 3 minutes. For fast reacting and medium fast reacting formulations, the temperature should not be allowed to rise above 40°C while for slow reacting formulations, it should not rise above 60°C. The mixing paddles should scrape the bottom and sides of the container so as to ensure complete mixing of the two components. The mixing should be carried out as close as possible to the site where the epoxy is to be used, so as to avoid loss of time and wastage of pot life in transport.

Epoxy shall be tested for its conformance to the FIP-1978 "Proposal for Standard Tests and Verification of Epoxy Bonding Agents for Segmental Construction". Some of the important properties of epoxy (minimum values) are as follows:

Pot life	:	20 minutes at upper temperature limit
Open time	:	60 minutes at upper temperature limit
Compressive strength	:	60 MPa at 24 hrs and 75 MPa at 168 hrs on 50 x 50 x 50 mm cube (at lower temperature limit)

Tensile bonding	:	After 24 hrs at 100% strength, humidity, should have concrete failure, no joint failure with M40 concrete (at lower temperature limit)
Shear strength	:	12 MPa (at lower temperature limit)
Curing rate	:	compressive strength on 50 x 50 x 50 mm cube shall be 20 MPa at 12 hrs, 40 MPa at 24 hrs and 75 MPa at 168 hrs (at lower temperature limit)

2305.3.6 Cast In-Situ Concrete Pour

In every unit of superstructure, consisting of precast segments, there shall be suitable numbers (at least one) cast in-situ concrete pour/stitch so as to ensure longitudinal alignment of the segment.

2305.3.7 Spliced Girder System

Spliced girder system in which smaller segments, usually pre-tensioned at precasting yard, are assembled together using cast in-situ concrete or epoxy and post tensioned, may be used to obtain large girder spans. For this purpose, the girder segments are temporarily supported over centering/steel tower or assembled at ground level and then post tensioned after jointing. In case of superstructures curved in plan, straight girder segments are placed along the chord line of the curvature to obtain the required geometry. In such cases, it is necessary to provide a cast in-situ cross diaphragm at each such kink in plan coinciding with the splice. The splicing can be done either before casting the deck or along with the deck. In the former case, post tensioning is imparted to the girder section alone whereas in the latter case, the post tensioning is imparted to the composite section.

A preferred location of splice will be the points of minimum stress such as one-third span points. At each cast in-situ splice location, adequately designed untensionsed reinforcement shall be provided by lapping, welding or use of mechanical couplers subject to the limitation of the relevant codes. However, in case of epoxy jointed splice, such reinforcement is not provided.

2305.3.8 Prestressing Ducts

In the case of dry jointed segments, the prestressing ducts shall necessarily be of HDPE. In the case of epoxy jointed segments, either metallic or HDPE ducts may be used. The ducts shall be corrugated and shall have size and thickness as per the provisions of Clause 1802.2.2 of these Specifications. Adequate precaution shall be taken to ensure that epoxy material does not leak into the joints of the ducts.

2305.3.9 Prestressing Couplers

In case prestressing couplers are used, in general, not more than 50 percent of the prestressing cables passing through a section shall be coupled at that section. Longitudinally the couplers shall be staggered by at least a distance equal to segment length or twice the overall depth of girder, whichever is more. Usual practice is to couple half the cables in one span and the other half in the next span and so on. Two immediately adjacent cables shall not be provided with couplers at one section.

2305.4 Precast Pre-Tensioned Girders

Precast pre-tensioned girders can be used for superstructure of bridges in association with cast in-situ/precast deck slabs and diaphragms. They can also be made continuous either through untensioned reinforcement at the intermediate support or through post tensioning.

All construction requirements of precast pre-tensioned girders shall be in accordance with the provisions of Section 1800 of these Specifications.

2306 CAST IN-PLACE VOIDED SLABS

Voided slabs can be either in reinforced concrete or in prestressed concrete.

Voids can be either circular or rectangular in shape. Void formers may be manufactured from steel sheets, fibre reinforced cement, expanded polystyrene, HDPE, etc. They are generally corrugated to attain sufficient rigidity in order to prevent distortion or collapse during concreting. They should also be leak tight.

Void formers shall be suitably tied down in order to prevent flotation during concreting. Care shall be taken during placement of concrete to ensure that the concrete flows fully into the space beneath the void formers.

2307 TOLERANCES

2307.1 Precast Concrete Superstructure

a)	Variations in thickness of top and bottom slab for box girders, top and bottom flange for T-girders and slabs	:	± 5 mm to
b)	Variations in web thickness	:	-5 mm to +10 mm
c)	Variations in overall depth or width	:	± 5 mm

	d)	Variation in length overall and length between bearings	: shall not exceed ± 10 mm or ± 0.1 percent of the span length, whichever is less
	e)	Permissible surface unevenness in deck slab when measured with a 3 m straight edge or template	: 5 mm

2307.2 Cast In-Situ Superstructure

	a)	Variations in thickness of top and bottom slab for box girders, top and bottom flange for T-girders and slabs	: -5 mm to +10 mm
	b)	Variations in web thickness	: -5 mm to +10 mm
	c)	Variations in overall depth or width	: ± 5 mm
	d)	Variation in length overall and length between bearings	: shall not exceed ± 10 mm or ± 0.1 percent of the span length, whichever is less
	e)	Permissible surface unevenness in deck slab when measured with a 3 m straight edge or template	: 5 mm

2308 TESTS AND STANDARDS OF ACCEPTANCE

The materials shall be tested in accordance with these Specifications and shall meet the prescribed criteria.

The work shall conform to these Specifications and shall meet the prescribed standards of acceptance.

2309 MEASUREMENT FOR PAYMENT

Concrete in superstructure shall be measured in accordance with Section 1700, based on the quantity ordered or as shown on the drawings.

Steel reinforcement (untensioned) in superstructure shall be measured in accordance with Section 1600, based on the quantity ordered or as shown on the drawings.

High tensile steel (prestressing) in superstructure shall be measured in accordance with Section 1800, based on the quantity ordered or as shown on the drawings.

2310 RATE

The contract unit rates for concrete, steel reinforcement (untensioned) and high tensile steel (prestressing) shall include all works as given in respective Sections of these Specifications and cover all incidental items for furnishing and providing superstructure as mentioned in this Section and as shown on the drawings.

2400

SURFACE AND SUBSURFACE GEOTECHNICAL INVESTIGATION

2401 DESCRIPTION

2401.1 The work shall cover investigation to determine the suitability or otherwise of the soil or rock to support the foundations of the bridge or other structure and also to determine soil parameters and rock characteristics required for the design of foundations by in-situ testing or testing of samples/cores taken from bores/drill holes. The subsurface investigation shall be carried out in such a way that the profiles of different types of soil for the entire length of the proposed structure are obtained and recorded. Other information to be obtained are mechanical and physical properties such as grain-size distribution, sensitivity, existence of deleterious material in soil or ground water, porosity of rock, subsidence due to mining, ground water level, artesian condition, likely sinking and driving effort and likely constructional difficulties.

2401.2 The field work shall consist of excavation, drilling of boreholes for the purpose of collection of undisturbed and disturbed samples, standard penetration tests, in-situ vane tests, static and dynamic cone penetration tests, other field tests, as specified by the Engineer and preparation of bore logs. It will also include collection, preservation and testing of disturbed and undisturbed samples from boreholes, borrow pits, etc. as specified by the Engineer. All in-situ tests shall be supplemented by laboratory investigations. Relevant Indian Standards such as IS:1498, IS:1888, IS:1892, IS:2131, IS:2132, IS:2720, IS:4434 and IS:4968 and Annex 2 of IRC:78 shall be followed for guidance.

2401.3 The soundings by dynamic method, where required shall be carried out in bore holes using a standard sampler as specified in IS:2131.

2402 EXTENT AND NUMBER OF BORES

2402.1 Investigations shall cover the entire length of the bridge and also extend on either side for a distance about twice the depth below bed of the last main foundation. Bores shall be taken at the location of each pier and abutment of the bridge. A minimum of two bores shall be taken in the approaches on either side, along the centre line of the alignment, at a distance of 50 m and 120 m behind the abutment positions. In case of viaducts in the approaches on either side of the bridge, bores shall be taken at the location of each foundation of the viaduct spans.

2402.2 Where detailed investigation indicates appreciable variation or where variations in a particular foundation are likely to appreciably affect the construction (specially in case of bridge foundations resting on rock), it will be necessary to take additional bores in the transverse direction also, to establish complete profile of the underlying strata. The number of additional bores shall be decided depending upon the extent of variation in local geology at a particular foundation location and should cover the entire area of that foundation.

2403 DEPTH OF BORES

2403.1 The bores shall be taken below the proposed founding level to a depth of at least 1½ times the width of foundation. In case the soil at that level is found to be unsuitable or of doubtful bearing capacity, the depth of investigation below the proposed founding level, shall be extended to 4 times the width of foundation or till firm and stable soil or rock is met with. If rock is met with, the depth of drilling into rock having RQD more than 75, may be limited to 3 metres.

2403.2 For embankments and guide bunds, the depth of bore should cover all strata likely to cause undesirable settlement affecting their stability. The depth of bore holes below the ground level may ordinarily be 2.5 times the maximum height of the embankment/ guide bund, subject to a minimum of 20 m. However, borings can be terminated at shallower depths when firm strata or bed rock is encountered. Where highly compressible strata are encountered, the boring may have to be taken deeper. In order to ensure that firm strata is sufficiently thick, the boring should extend 3 metres into the firm strata.

2404 DETAILED INVESTIGATION

2404.1 The subsurface investigation for bridges shall be carried out in the following three zones:

i) between bed level and up to anticipated maximum scour depth (below H.F.L.)

ii) from the maximum scour depth to the founding level

iii) from founding level to a depth of about 1½ times the width of the foundation

The data required to be obtained from each zone will cover soil classification, particle size distribution, shearing strength characteristics, compressibility and permeability as detailed in Table 1 of Annex 2 of IRC:78.In all cases, samples of soils shall be collected at every 1 m to 1.5 m depth or at change of strata.

2404.2 For high embankments, the average sheer stress of each strata below ground level and compressibility of clayey strata, if present, shall be ascertained. The location and depth of bore for undisturbed sampling, shall be such as to give information regarding boundaries of the various strata. At least one representative undisturbed sample should be collected from each strata. When the homogeneous strata is very thick, one representative sample shall be collected for each 3 m thickness of the strata.

2404.3 Whenever a change in the subsoil strata/rock profile is encountered during construction, further investigations shall be carried out to establish the correct data required for revised design of foundations, if necessary.

2404.4 Logging of bore holes by radioactive methods for detailed investigations, if required, shall be done as specified in the contract or in special provisions.

2404.5 For bridge works, the investigations shall be comprehensive enough to give the following information to the designer:

i) the engineering properties of the soil/rock,

ii) the location and extent of soft layers, cavities and gas pockets, if any, under the hard founding strata,

iii) the geological condition like type of rock, faults, fissures or subsidence due to mining, cavities, hollows, porosity etc.,

iv) ground water level,

v) artesian conditions, if any,

vi) quality of water in contact with the foundation,

vii) the depth and extent of scour,

viii) suitable depth of foundation,

ix) bearing capacity of the stratum

x) probable settlement and differential settlement of the foundations,

xi) likely sinking or driving effort, and

xii) likely construction difficulties.

2405 DETAILED INVESTIGATION FOR BRIDGE FOUNDATIONS RESTING ON ROCK

2405.1 Investigation and interpretation of data of rock strata, is a specialised work for which the services of an engineering geologist shall be availed of. To arrive at the characteristic strength of rock mass, reliance shall be placed more on in-situ tests than on laboratory tests.

2405.2 Identification and classification of rock types for engineering purposes may in general be limited to broad, basic geological classes in accordance with accepted practice. Strength of parent rock alone is of limited value because overall characteristics depend to a large extent on character, spacing and distribution of discontinuities such as joints, bedding planes, faults and weathered seams in the rock mass. An important factor affecting the behaviour of the rock is the weathered zone at top.

2405.3 Basic Information Required from Investigations

i) Geological system

ii) Depth of rock strata and its variation over the length of the bridge

iii) Whether bed consists of isolated boulders or continuous rock formation

iv) Extent and character of weathered zone

v) Structure of rock – including bedding planes, faults, fissures, solution cavities etc.

vi) Properties of rock material – strength, geological formation, etc.

vii) Colour, quality and quantity of water coming out of drill holes

viii) Erodability of rock to the extent possible, where relevant

2405.4 Extent of Investigation

2405.4.1 The extent of investigation shall be adequate enough to cover the whole area of the bridge site for general characteristics and in particular, the foundation locations, to obtain definite information regarding depth of rock and its variation over the foundation area. A complete picture of the rock profile both in depth and across the channel width is necessary to assess the constructional difficulties in reaching the founding levels.

2405.4.2 The depth of boring in rock depends primarily on local geology, erodibility of the rock and extent of structural loads coming on the foundations. Normally, the bore shall pass through the upper weathered or otherwise weak zone and to sufficient depth to distinguish an isolated boulder from a continuous rock formation.

2405.5 Drilling through rock is a very specialised work requiring careful noting and recording of every change that occurs during drilling. The time required to drill through a certain depth, amount of core recovery, physical condition, length of pieces of core, joints, colour of water residue, weathering and evidence of disturbance and other effects shall be carefully noted and entered in the drilling log. For guidance, IS:5313 may be referred. The data shall be recorded in accordance with IS:4464. The cores shall be stored properly in accordance with IS:4078.

2405.6 Core Recovery and Rock Quality Designation

The quality of rock cores shall be classified according to Rock Quality Designation as given in Table 2400-1.

Table 2400-1 : Classification According To RQD

RQD Percent	Core Quality
90 – 100	Excellent
75 – 90	Good
50 – 75	Fair
25 – 50	Poor
25	Very Poor

2405.7 The rock cores obtained shall be subjected to the following tests:

i) Visual identification for texture, structure, composition, colour and grain size.

ii) Laboratory tests for specific gravity, porosity and moisture content.

2405.8 In-situ tests shall be carried out for measuring strength and deformation characteristics. The in-situ tests shall be in accordance with IS:7292; IS:7317; and IS:7746. Bore hole photography will also be desirable to evaluate the presence of faults, fissures or cavities, etc. In addition, laboratory tests can also be made on samples.

2405.9 Special Cases

2405.9.1 Investigation for Conglomerate

A drill hole shall be made same as for rock. The samples collected shall be subjected to suitable tests depending on the material. Care shall be taken to ascertain erodibility of the matrix. Where possible, especially for shallow foundation, Plate Load Test shall be conducted.

2405.9.2 Investigation for Laterites

The investigation shall be generally similar to that required for cohesive soils. Use of penetration tests shall be preferred, if suitable correlation charts are available. These may be static or dynamic penetration tests or vane shear tests. In the case of hard laterite, core drilling as for soft rocks may have to be resorted to. For laterites at shallow depths, use of Plate Load Test may be advantageous.

2405.10 Caution

2405.10.1 The interpretation of laboratory results on rock samples depends upon the relationship of the specimens tested to the overall rock characteristics, enumerated in Annex 2 of IRC:78. For this purpose, care shall be exercised in the choice of specimen size and its orientation in relation to the joint pattern.

2405.10.2 In some cases, the foundation behaviour will be dominated by a possible mode of failure involving movement along some joint planes, fissures or weak layer within a generally strong rock system and also by possible weathering. In-situ shear tests may be conducted wherever feasible, as such tests are likely to give more representative data than the shear tests conducted on core samples.

2405.11 Presentation of Data

The data shall be given in diagrammatic form in 3 sheets giving the following details:

Sheet 1 : Plan showing the position of bore-holes clearly marked so as to fix the locations which can be easily identified at a future date.

Sheet 2 : Bore log chart and test results of the samples separately for each bore hole/ drill hole/pit.

Sheet 3 : Pictorial representation of the bore log data to get an overall idea of the soil profile at the cross section of the river along the length of the bridge.

Note: For guidance refer to IRC:78

2406 BORING

Boring shall be done by any of the following methods depending on the soil type and types of samples required for the investigation.

i) Auger Boring

ii) Shell and Auger Boring

iii) Percussion Boring

iv) Wash Boring

v) Rotary Boring

For detailed subsurface investigation, only rotary drills shall be used. Casing shall also be invariably provided with diameters not less than 150 mm up to the level of rock, if any. Use of percussion or wash boring equipment shall be permitted only to penetrate through bouldery or gravelly strata for progressing the boring but not for the collection of samples. While conducting detailed borings, the resistance to the speed of drilling i.e. rate of penetration, core loss, etc., as specified in Annex-2 of IRC:78 shall be carefully recorded to evaluate the different types of strata and specially to distinguish sand from sandstone, clay from shale, etc.

2407 RECORDS OF BORINGS AND TRIAL PITS

2407.1 The field records for the preliminary and detailed investigation shall contain the date when the boring was made, the location of the boring with reference to a permanent system of co-ordinates and the elevation of the ground surface with respect to a permanent

bench mark. They shall include elevation at which the water table and the upper boundary of each of the successive soil strata were encountered, the investigator's classification of the layer on the basis of general information obtained from field examination (refer to Appendix 2.1 of IRC:75) and the value of the resistance obtained by means of Standard Penetration Test. The type of tools used for borings shall be recorded. If the tools were changed at any stage, the depth at which the change was made and the reason therefore shall also be noted. Incomplete and abandoned borings shall be described with no less care than successfully completed ones. The notes shall contain everything of significance observed on the job such as the elevation at which wash water was lost from the hole.

2407.2 For borings and trial pits, necessary information shall be given covering the following. A site plan showing the disposition of the bore holes shall also be attached:

a) Agency

b) Location with reference map

c) Pit/Bore-hole number

d) Reduced level (R.L.) of ground surface or other reference point

e) Dates of starting and completion

f) Name of supervisor

g) Scales of plans and sections

h) Description of methods such as hand tools, blasting, boring, etc. used for proceeding with investigation

i) General description of strata met with the RLs at which they are met

j) Position and altitude of contacts, faults, strong joint, slicken sides, etc.

k) Inflow of water, methods of controlling the water, required capacity of pumps for dewatering

l) The level at which subsoil water is met

m) Dip and strike of bedding and of cleavage

n) Visual description of strata

o) Results of field tests e.g. SPT, in-situ vane shear test etc.

p) Any other information and remarks.

q) The length of the sample in the tube and the length between the top of the tube and the top of the sample in the tube upon removal of sampling tube.

2408 METHODS OF SAMPLING

There are two types of samples viz. (a) Disturbed sample (b) Undisturbed sample. The usual methods for sampling conforming to IS:1892 and IS:2132 are given below :

Nature of Ground	Type of Sample	Method of Sampling
Soil	Disturbed	Hand Samples
		Auger Samples
		Shell Samples
	Undisturbed	Hand Samples
		Tube Samples
Rock	Disturbed	Wash samples from Percussion or rotary drilling
	Undisturbed	Cores

2409 PROCEDURE FOR TAKING SAMPLES

2409.1 For proper identification of subsurface material, sample should be recovered containing all the constituents of the materials in their proper proportion. In clayey deposits, such samples could be collected by split spoon samplers. In sandy deposits, sampling spoons shall be fitted with suitable devices for retaining samples. All data required for soil identification (Appendix-2.1 of IRC:75) should be collected from the samples so extracted when undisturbed samples, are not available. Penetration test should be carried out with the standard splitspoon sampler or penetrometers if the soil is coarse grained. If the soil profile is known to be fairly regular, preliminary and detailed investigation may be combined. Tube samplers can be used in place of split spoon samplers for collecting samples in clayey strata.

2409.2 Disturbed Soil Samples

2409.2.1 Disturbed samples of soil shall be obtained in the course of excavation and boring. For procuring samples from below the ground water level, where possible, special type of sampler shall be used. Where Standard Penetration Test is conducted, representative samples shall be obtained from the split spoon. While collecting disturbed samples from borrow areas it shall be ensured that the samples collected represent all types of borrow materials to be used in the construction of embankment and subgrade.

2409.2.2 The size of sample generally required shall be as given in Table 2400-2.

Table 2400-2 : Size of Soil Sample Required

S.No.	Purpose of Sample	Soil Type	Weight of Sample Required Kg
1)	Soil identification, natural moisture content tests, mechanical analysis and index properties, chemical tests	cohesive soils sands & gravels	1 3
2)	Compression tests	cohesive soils and sand	12.5
3)	Comprehensive examination of construction material and borrow area soil including soil stabilization	cohesive soils sands gravelly soil	25-50 50-100

2409.2.3 While taking out disturbed soil samples, Standard Penetration Test may also be conducted to find out the bearing capacity of the subsoils at specified levels.

2409.3 Undisturbed Soil Samples

2409.3.1 The location of the bore-hole shall be as indicated on the drawing or given by the Engineer. The depth of the bore-hole shall be as indicated on the drawing or shall be governed by the criteria given therein or as directed by the Engineer.

2409.3.2 Samples shall be obtained in such a manner that their moisture content and structure do not get altered. This may be ensured by use of correctly designed sampler and by careful preservation and packing.

2409.3.3 Standard Penetration Test may have to be conducted in each case to obtain additional data as directed by the Engineer. In soft clay, in-situ vane shear test as per IS:4434 may have to be conducted. Where all the three operations have to be carried out in one layer, the sequence shall be as follows: undisturbed soil sampling, in-situ vane shear test, Standard Penetration Test.

2409.3.4 For compression test samples, a core of 40 mm diameter and about 150 to 200 mm length may be sufficient, but for other laboratory tests, a core of 100 mm diameter and 300 mm length shall be taken unless otherwise specified by the Engineer.

2409.3.5 The upper few millimeters of both types of sample shall be removed as the soil at the bottom of the bore hole usually gets disturbed by the boring tools.

2409.4 Rock Samples

2409.4.1 Disturbed Samples

The sludge from percussion borings or from rotary borings which have failed to yield a core,

shall be collected to serve as a disturbed sample. It may be recovered by settlement of circulating water in a trough.

2409.4.2 Undisturbed Samples

Block samples taken from the rock formation shall be dressed to a size of about 90 mm x 75 mm x 50 mm.

Cores of rock shall be taken by means of rotary drills fitted with a coring bit with core retainer, if warranted.

2409.4.3 In case rock is met with at shallow depths, test pits or trenches may be dug. These are most dependable since they permit a direct examination of the surface, the weathered zone and discontinuities, if any. It is also possible to take representative samples for tests. For guidance, IS:4453 may be referred.

2410 PRESERVATION, HANDLING AND LABELLING OF SAMPLES

2410.1 The samples shall be labelled and handled carefully so that they are received in the laboratory in a fit state for examination and testing and can be correctly identified as coming from a specified trial pit or bore.

2410.2 The disturbed material in the upper end of the tube shall be completely removed before applying wax for sealing. The length and type of material so removed should be recorded.

2410.3 The soil at the lower end of the tube shall be reamed for a length of about 20 mm. After cleaning, both ends shall be sealed with wax applied in such a way that it does not enter the sample. Wax used for sealing should not be heated to more than a few degrees above its melting temperature. The empty space in the samplers, if any, should be filled with moist soil or saw dust and the ends covered with tight fitting caps.

2410.4 Labels Giving the Following Information Should be Affixed to the Tubes:

a) Job designation

b) Sample location

c) Boring number

d) Tube number

e) Sample number

f) Depth

g) Penetration

h) Gross recovery ratio

The tube and boring numbers should be marked in duplicate.

The boring number and sample number should also be marked on a sheet of material which will not be affected by moisture and enclosed in the tube.

2411 TESTS FOR INVESTIGATION OF SHALLOW FOUNDATIONS OF BRIDGES

2411.1 Digging of test pits or trenches is the most dependable method of investigation, since it permits direct and reliable visual examination of the type of soil and its stratification. In-situ tests like plate bearing tests, shear tests and uni-axial jacking tests can also be conveniently carried out in the test pits.

2411.2 Tests shall be conducted on undisturbed samples, which may be obtained from open pits. The use of Plate Load Test (as per IS:1888) is considered desirable to ascertain the safe bearing capacity and settlement characteristics. A few exploratory bore holes or soundings extending to a depth of about 1½ times the proposed width of foundation shall also be made to ascertain whether there is any weak strata underlying the foundation.

The results of laboratory tests shall be correlated with those of in-situ tests like Plate Load Tests and Penetration Test.

2412 TESTS FOR INVESTIGATION FOR DEEP FOUNDATIONS OF BRIDGES

2412.1 The tests to be conducted for obtaining the properties of soil are different for cohesive soils and for cohensionless soils. These are enumerated below and shall be carried out, wherever practicable, according to soil type. While selecting the tests and interpreting the results, limitation of applicability of particular tests shall be taken into account. A most suitable and appropriate combination of tests shall be chosen, depending on the properties needed for design and constructional aspects.

2412.1.1 Cohesionless Soil

a) Laboratory Tests

i) Classification tests, index tests, density determination, etc.

ii) Shear strengths by triaxial/direct shear, etc.

b) Field Tests

i) Plate Load Test (as per IS:1888)

ii) Standard Penetration Tests (as per IS:2131)

iii) Dynamic Cone Penetration Test (as per IS:4968 Part I or Part II)

iv) Static Cone Penetration Test (as per IS:4968 Part III)

2412.1.2 Cohesive Soil

a) Laboratory Tests

i) Classification tests, index tests, density determination, etc.

ii) Shear strengths by triaxial/direct shear, etc.

iii) Unconfined Compression Test (as per IS:2720 Part X)

iv) Consolidation Test (as per IS:2720 Part V)

b) Field Tests

i) Plate Load test (as per IS:1888)

ii) Vane Shear Test (as per IS:4434).

iii) Static Cone Penetration Test (as per IS:4968 Part III)

iv) Standard Penetration Tests (as per IS:2131),

v) Dynamic Cone Penetration Test (as per IS:4968 (Part I or Part II)

2412.1.3 For both cohesionless and cohesive soils where dewatering is expected, permeability tests may be conducted as per IS:2720 Part XVII.

2412.2 The subsoil water shall be tested for chemical properties to ascertain whether there is any hazard which may cause deterioration of concrete in foundations. Where dewatering is expected to be required, permeability characteristics shall also be determined.

2413 TESTING OF MATERIAL FOR FOUNDATIONS OF GUIDE BUNDS AND HIGH EMBANKMENTS

2413.1 The soil properties of the embankment foundation shall be got verified prior to start of construction in order to ascertain whether they conform to the requirements as specified in particular specifications. In case they do not, then the embankment design will have to be got revised.

2413.2 In addition to the relevant identification tests, mentioned in IRC:75, it shall be necessary to conduct some of the following tests on the undisturbed samples collected from

the sub-strata. The choice of test is primarily determined by the type of soil, type of stability analysis (vide Table 2400-3), availability of apparatus and cost of investigation.

Table 2400-3 : Shear Strength Tests for Stability Analysis

S. No.	Stage in Life of Embankment	Strength Parameters	Shear Test	Type of Analysis
1)	(a) During construction or immediate post-construction	c_{uu}, Φuu	Unconsolidated undrained triaxial shear test on undisturbed samples and on compacted embankment material	Total stress analysis
	(b) — do —	S_u	Unconfined compression test in laboratory or vane shear test	— do —
	(c) — do —	CΦ	Consolidated undrained test with pore-pressure measurement on as compacted soil samples embankment materials and on undisturbed samples	Effective stress analysis
2)	Long term stability	CΦ	— do —	— do —

2413.3 The results of reconnaissance, field and laboratory investigations for embankments shall be compiled into a well-knit report. The record of findings and recommendations, if any, may be presented in the form of, graphs, figures and tables, as appropriate for different types of data and findings.

Information and data to be contained in the report should include general location map, pertinent geological information on reconnaissance observations, subsoil profile (Fig. 2.1 of IRC:75), boring logs and summary of subsoil properties (Fig. 2.2 of IRC:75), graphs and tables related to laboratory investigations, results of borrow area investigations (Fig. 2.3 of IRC:75) and recommendations, if any.

Undisturbed samples shall be collected from each layer of subsoil. In case, the stratum is such that undisturbed samples cannot be collected using ordinary sampler, they shall be collected using piston sampler or core-cutter or such special devices as directed by the Engineer. In thick layers undisturbed samples shall be collected at 3 m intervals.

2414 MEASUREMENT FOR PAYMENT

For bridge and road structures, the work of boring and trial pits shall be considered as incidental to the foundation works and nothing extra shall be paid unless otherwise specified

in the contract. In cases, where contract for soil investigation is given separately, the work shall be measured in running metres for borings, in cubic metres for trial pits, in number of samples for collection of disturbed and undisturbed samples and in number of tests for each type of test.

2415 RATE

The contract unit rate shall include the cost of all labour, materials, tools and plant and equipment including mobilization / demobilization of rigs of specified type, required for doing the boring or making pits as per these Specifications, taking out and packing the samples, sending and getting them tested in approved laboratories and making available the test report as specified or directed by the Engineer, inclusive of all incidental costs to complete the work as per specifications.

2500

RIVER TRAINING AND PROTECTION WORK

2501 DESCRIPTION

River training and protection work shall include construction of guide bunds, guide walls, spurs, groynes, bank protection, flooring, cut-off walls, apron and approach embankment protection, as required for ensuring safety of the bridge structure and its approaches against damage due to flood/flowing water. Construction of various components shall conform to IRC: 89 and these Specifications or as directed by the Engineer.

2502 GUIDE BUND

2502.1 This work shall consist of construction of embankment of guide bund and provision of pitching/rivetment on slopes, apron and toe protection, etc., as indicated on the drawing, in accordance with these Specifications or as approved by the Engineer.

The provisions given hereunder are applicable only to guide bunds for bridges across alluvial rivers. Guide bunds for bridges across submontane rivers will require supplemental specifications.

2502.2 The alignment and layout of guide bund shall be as indicated on the drawing or as approved by the Engineer. The construction of embankment for guide bund shall conform to provisions of Section 300 of these Specifications. Pitching, filter underneath pitching and turfing, apron, toe protection, curtain walls, etc., shall be as per these Specifications.

2502.3 Guide bunds shall be made of locally available materials. Trial pits shall be taken in borrow areas to examine suitability of soil for construction and also to decide the types of earth moving machinery to be used. No borrow pits should be dug on the river side of the guide bunds.

Construction of guide bund shall be taken in hand along with the construction of the bridge. Every effort shall be made to complete the work of the guide bund in one working season. Where this is not possible, suitable measures shall be planned and executed for protection of completed work. In such cases, the construction of guide bund shall be started from abutment towards upstream.

2502.4 Construction of apron and pitching of the guide bunds shall conform to Clauses 2503 and 2504 of these Specifications. Sufficient area along the side of the guide bund shall be ready within one to two months of commencement of work, so that the placing of stones in the apron and in the slope pitching can be commenced. As a guideline, earth work should be completed within 80 percent of the working season. Also, about 70 percent of the working season shall be available for laying apron and pitching. No portion of the guide bund should be left incomplete below high flood level before the onset of the monsoon. Bottom of apron pit shall be as low as permitted by subsoil water/lowest water level. Sufficient labour and appropriate earth moving machinery and trained staff shall be deployed in construction so as to complete the work in the required time.

2502.5 The Contractor shall furnish for approval of the Engineer, his methodology for transport of stones from the quarries to the site of work taking into account the quantities of stone required to be transported every day, type of transport to be used (train, truck, ferry,

boats) and labour for loading, unloading and laying within the time frame for construction of guide bund. Adequate reserve of stones should be maintained for major works as decided by the Engineer. Reserve stones shall be stacked away from the main channel of the river.

2502.6 Where the alignment of guide bund or the approach embankment crosses branch channel of the river, the branch channel shall be either diverted to the main channel of the river with the help of spurs, etc. or closed by a properly designed closing dyke or closure bund, before taking up construction of guide bund.

2503 APRON

2503.1 General

This work shall consist of laying boulders directly or in wire crates on the bed of rivers for protection against scour.

The stones used in apron shall be sound, hard, durable and fairly regular in shape. Stones subject to marked deterioration by water or weather shall not be used.

Quarry stones having angular shapes shall be preferred to round boulders.

Where the stones of required size are not economically available, cement concrete blocks in minimum M15 grade conforming to Section 1700 of these Specifications or stones in wire crates shall be used.

2503.2 Boulder Apron

The size of stone shall conform to Clause 5.3.7.2 of IRC: 89.

The size of stone shall be as large as possible and no stone shall weigh less than 40 kg. The specific gravity of stones shall be as high as possible and not less than 2.4.

To ensure regular and orderly disposition of the full intended quantity of stone in the apron, template cross walls in dry masonry shall be built about a metre thick and to the full height of the specified thickness of the apron, at intervals of 30 metres all along the length and width of the apron. Within these walls, the stone shall be hand packed.

The surface on which the apron is to be laid shall be levelled and prepared for the length and width, as shown on the drawings. In case the surface is below the low water level, the ground level may be raised upto low water level by dumping earth and the apron laid thereon. In such cases, the quantity of stone required in apron shall be re-worked by taking the toe of pitching at higher level.

2503.3 Wire Crates and Mattresses for Apron

Wire Crates and Mattresses shall be any of two types mechanically woven and hand woven.

2503.3.1 Mechanically Woven Crates (Gabions and Mattresses)

2503.3.1.1 Description

Mechanically woven wire crates shall be made of hot dipped galvanized mild steel wire of diameter not less than 2.2 mm having minimum tensile strength 350 MPa conforming to IS:280. The galvanisation shall be heavy coating for soft condition conforming to IS:4826. For corrosive environment, an additional PVC coating of 0.5 mm thickness shall be provided over the galvanisation, or zinc alloy coating as per EN 10244-2 shall be provided in place of galvanisation. The mesh of the crate shall be of type 10 x 12, 8 x 10, and 6 x 8 as per EN 10223. Mesh shall be given double twist at each intersection and shall be mechanically selvedged all along the edges of the boxes. Wire crates standard sizes shall be as per ASTM A975. The wire crates shall be divided into compartments by diaphragms placed at 1 m centre to centre.

2503.3.1.2 Mesh and Box Characteristics

Mesh types and shapes shall be as given in Table 2500-1. The mesh and box characteristics of gabions and mattresses shall be as per Tables 2500-2 and 2500- 3 respectively.

Table 2500-1 : Mesh Types and Sizes

Mesh Type	'D' Nominal Size, mm	Tolerances
10 x 12	100	+ 16% to – 4%
8 x 10	80	
6 x 8	60	

Table 2500-2 : Mesh & Box Characteristics for Gabions

Mesh Type	10 x 12			8 x 10		
'D', mm	100			80		
Wire Type	Only Zinc Coated		Zinc + PVC Coated	Only Zinc Coated		Zinc + PVC Coated
Mesh Wire Dia, mm	2.70	3.00	2.70/3.70*	2.70	3.00	2.70/3.70*
Edge/Selvedge wire Dia, mm	3.40	3.90	3.40/4.40*	3.40	3.90	3.40/4.40*
Lacing wire dia, mm	2.20	2.20	2.20/3.20*	2.20	2.20	2.20/3.20*
PVC coating thickness, mm	N. A		Nominal – 0.50 Minimum – 0.38	N. A		Nominal – 0.50 Minimum – 0.38
Typical Sizes Length x Width x Height (m)/ Number of diaphragms	4 x 1 x 1 / 3 Nos, 3 x 1 x 1 / 2 Nos, 2 x 1 x 1 / 1 No, 1.5 x 1 x 1 / 0 No, 2 x 1 x 0.5 / 1 No , 3 x 1 x 0.5 / 2 Nos, 4 x 1 x 0.5 / 3 Nos, 2 x 1 x 0.3 / 1 No, 3 x 1 x 0.3 / 2 Nos, 4 x 1 x 0.3 / 3 Nos					
Tolerances in Size of Gabion Boxes	Length & Width... +/- 5%: Height > 0.3m... +/- 5% and Height <= 0.3m... +/- 10%					

* Internal Diameter/External diameter of PVC Coated Wire

Only standard sizes of Gabion boxes are indicated in the table above. Special sizes can also be ordered as agreed between the purchaser and manufacturer.

Table 2500-3 : Mesh & Box Characteristics for Revet Mattresses

Mesh Type	6 x 8	
'D', mm	60	
Wire Type	Only Zinc Coated	Zinc + PVC Coated
Mesh Wire Dia, mm	2.20	2.20/3.20*
Edge/Selvedge wire Dia, mm	2.70	2.70/3.70*
Lacing wire dia, mm	2.20	2.20/3.20*
PVC coating thickness, mm	N. A	Nominal – 0.50 Minimum – 0.38
Typical Sizes Length x Width x Height (m)/Number of diaphragms	4 x 2 x 0.17 / 3 Nos, 3 x 2 x 0.17 / 2 Nos, 2 x 2 x 0.17 / 1 No 4 x 2 x 0.23 / 3 Nos, 3 x 2 x 0.23 / 2 Nos, 2 x 2 x 0.23 / 1 No 4 x 2 x 0.30 / 3 Nos, 3 x 2 x 0.30 / 2 Nos, 2 x 2 x 0.30 / 1 No	
Tolerances in Size of Revet Mattresses	Length & Width ... +/- 5%: Height <= 0.3m ... +/- 10%	

* Internal Diameter/External diameter of PVC coated wire

2503.3.1.3 Dimensions and Tolerances

The diameter of galvanized steel wire shall conform to the values as per Table 2500-2 for Gabions and Table 2500-3 for Revet mattresses. The diameter of the wires shall also conform to the tolerance limits plus and minus the values as shown in Table 2500-4.

Table 2500-4 : Permitted Tolerances on Galvanized Steel Wire Diameters

Nominal Diameter of Galvanized Wire, mm	Permitted Tolerances (+/-) on Wire Diameters, mm
2.00	0.05
2.20	0.06
2.40	0.06
2.70	0.07
3.00	0.08
3.40	0.09
3.90	0.10

Note :

1) The minimum and nominal thickness of PVC coating uniformly applied in a quality workmanlike manner shall be as shown in Tables 2500-2 and 2500-3.

2) Gabions shall be manufactured with a 10 x 12 or 8 x 10 mesh type (Fig. 2500-1) having a nominal mesh opening size as per Table 2500-2. Dimensions are measured at right angles to the center axis of the opening and parallel to the twist along the same axis.

3) Revet mattresses shall be manufactured with a 6 x 8 mesh type (Fig. 2500-1) having a nominal mesh opening size as per Table 2500-2. Dimensions are measured at right angles to the center axis of the opening and parallel to the twist along the same axis.

4) The width and length of the gabions and revet mattresses as manufactured shall not differ more than +/- 5% from the ordered size prior to filling. Typical gabion and revet mattress sizes are shown in Tables 2500-2 and 2500-3 respectively.

5) The height of the gabions and revet mattresses as manufactured shall not differ more than +/- 10% if the height is less than or equal to 0.3 m and shall not differ more than +/- 5% if the height is more than 0.3 m from the ordered size prior to filling.

6) Mesh Opening Tolerances – Tolerances on the hexagonal, double-twisted wire mesh opening shall not exceed +16% to –4% on the nominal dimension D values mentioned in Table 2500-1.

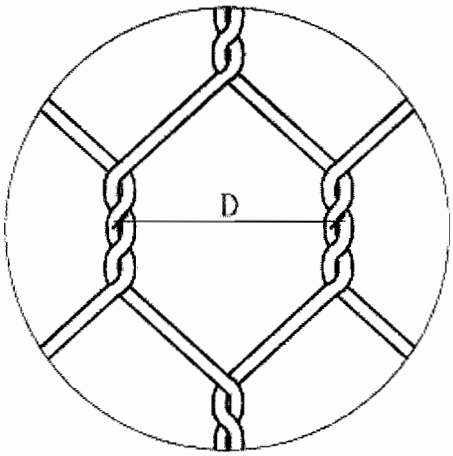

Fig. 2500-1 : Mesh Type & Nominal Size 'D'

2503.3.1.4 Terminology, mechanical properties, physical properties, number of tests and test methods related to mechanically woven wire crates shall be as per Appendix-2500/I.

2503.3.2 Hand Woven Wire Crates

Wire crates shall be made from hot dipped galvanized mild steel wire of diameter not less than 4 mm in annealed condition having tensile strength of 300 MPa-450 MPa conforming to IS:280. The galvanizing shall be heavy coating for soft condition conforming to IS:4826.

The mesh size of the crate shall not be more than 150 mm.

Wire crates for shallow or accessible situations shall be 3 m x 1.5 m x 1.25 m in size. Where these have to be deposited and there is a possibility of overturning, the crate shall be divided into 1.5 m compartments by cross netting.

For deep or inaccessible situations, wire crates can be made smaller subject to the approval of the Engineer.

Wire crates built in-situ, shall not be larger than 7.5 m x 3 m x 0.6 m, nor smaller than 2 m x 1 m x 0.3 m. Sides of large crates shall be securely stayed at intervals of not more than 1.50 m to prevent bulging.

The netting shall be made by fixing a row of spikes on a beam at a spacing equal to the mesh. The beam must be a little longer than the width of netting required. The wire is to be cut to lengths about three times the length of the net required. Each piece shall be bent at the middle around one of the spikes and the weaving commenced from the corner.

A double twist shall be given at each intersection. The twisting shall be carefully done by means of a strong iron bar, five and half turns being given to the bar at each splice.

The bottom and two ends of the crate or mattress shall be made at one time. The other two sides shall be made separately and shall be secured to the bottom and the ends by twisting adjacent wires together. The top shall be made separately and shall be fixed in the same manner as the sides after the crates or mattress have been filled.

2503.3.3 Laying of Wire Crates

Wherever possible, crates shall be placed in position before filling with boulders. Undulations in the bed shall be levelled prior to placement of wire crate units. The crates shall be filled by carefully hand-packing the boulders as tightly as possible and not by merely throwing in the stones or boulders.

Where the crates are to be laid on the sides and bed of the stream in underwater conditions, they shall be prefilled on dry area, lifted by cranes using suitable size frames with lifting slings at every 0.5 m to 1 m maximum spacing and placed at designated locations. Sacrificial steel rods of diameter 20 mm to 25 mm may also be used, in place of frame, by tying them to the edges and lifting directly with closely spaced slings. Once placed, divers shall lace the crates together at all contact surfaces. For sides of the banks a tilting platform, pantoon or barge can be used where mattresses are filled with stones on the level platform, resting at one end on the bank and has the other edge hinged to the pantoon/barge. One end of the filled wire crate is anchored to the dry edge of the slope and then the pantoon/barge is moved away

from the bank, thus lowering and sliding out the tilted platform under the crate, gradually placing the crate on the slopes while the tilted platform rotates around its hinges.

2504 PITCHING/REVETMENT ON SLOPES

2504.1 Description

The work shall consist of covering the river side slopes of guide bunds, training works and road embankments with stone, boulders, cement concrete blocks or stones in wire crates over a layer of granular material which will act as a filter. The rear slopes, not subjected to direct attack of the river, may be protected by 300 mm - 600 mm thick cover of clayey or silty earth and turfing.

2504.2 Pitching and Filter Medium

2504.2.1 Pitching

The pitching shall be provided with stones of thickness and shape as indicated on the drawings.

The stones shall be obtained from quarries and shall be sound, hard, durable and fairly regular in shape. Round boulders shall not be allowed. Stones showing marked deterioration by water or weather shall not be accepted.

The size and weight of stone shall conform to Clause 5.3.5.1 of IRC: 89. No stone, shall weigh less than 40 kg. The size of spalls shall be a minimum of 25 mm and shall be suitable to fill the voids in the pitching.

Where the stones of required size are not economically available, cement concrete blocks in minimum M15 grade concrete conforming to Section 1700 of these Specifications or stones in wire crates, shall be used.

Geosynthetics, if used in pitching, shall conform to Section 700 of these Specifications.

2504.2.2 Filter Medium

The material for the filter shall consist of coarse sand, gravel or stone. One or more layers of graded materials, to act as a filter medium, shall be provided underneath the pitching, to prevent loss of the embankment material and build up of uplift head on the pitching.

The gradation of the filter material shall satisfy the following requirements:

$$\frac{D\ 15\ (Filter)}{D\ 85\ (Base)} < 5$$

$$4 < \frac{D\ 15\ (Filter)}{D\ 15\ (Base)} < 20$$

$$\frac{D\ 50\ (Filter)}{D\ 50\ (Base)} < 25$$

Notes :

1) Filter design may not be required if embankment consists of CH or CL soils with liquid limit greater than 30, resistant to surface erosion. In this case, if a layer of material is used as bedding for pitching, it shall be well graded and its D 85 size shall be at least twice the maximum void size in pitching

2) In the foregoing, D 15 means the size of that sieve which allows 15 percent by weight of the filter material to pass through it and similar is the meaning of D 50 and D 85 (15 being replaced with 50 and 85 respectively).

3) If more than one filter layer is required, the same requirement as above shall be followed for each layer. The finer filter shall be considered as base material for selection of coarser filter.

4) The filter shall be compacted to a firm condition. The thickness of filter is generally of the order of 200 mm to 300 mm. Where filter is provided in two layers, thickness of each layer shall be 150 mm.

2504.3 Construction Operations

Before laying the pitching, the side of banks shall be trimmed to the required slope and profiles by means of lines and pegs at intervals of 3 m. Depressions shall be filled and thoroughly compacted.

The filter granular material shall be laid over the prepared base and compacted to the thickness specified on the drawings by means of suitable equipment.

The lowest course of pitching shall be started from the toe wall and built up in courses upwards. The toe wall shall be in dry rubble masonry (uncoursed) conforming to Clause 1405.3, of these Specifications in case of dry rubble pitching. It shall be in nominal mix cement concrete (M 15) conforming to Clause 1704.3, of these Specifications in case of cement concrete block pitching.

The stone pitching shall commence in a trench below the toe of the slope. Stone shall be placed by derrick or by hand to the required length, thickness and depth conforming to the drawings. Stones shall be set normal to the slope, and placed so that the largest dimension is perpendicular to the face of the slope, unless such dimension is greater than the specified thickness of pitching.

The largest stones shall be placed in the bottom courses and for use as headers for subsequent courses.

In hand placed pitching, the stone of flat stratified nature should be placed with the principal bedding plane normal to the slope. The pattern of laying shall be such that the joints are broken and voids are minimum by packing with spalls, wherever necessary, and the top surface is as smooth as possible.

When full depth of pitching can be formed with a single stone, the stones shall be laid breaking joints and all interstices between adjacent stones shall be filled in with spalls of the proper size wedged in with hammers to ensure tight packing.

When two or more layers of stones must be laid to obtain the design thickness of pitching, dry masonry shall be used and stones shall be well bonded. To ensure regular and orderly disposition of the full intended quantity of stone as shown, template cross walls in dry masonry shall be built about a metre wide and to the full height of the specified thickness at suitable intervals all along the length and width of the pitching. Within these walls the stones shall be hand packed as specified.

2504.4 Toe Protection

A toe wall shall be provided at the junction of slope pitching and launching apron of a guide bund so as to prevent the slope pitching from sliding down. The toe wall shall be in dry rubble masonry (uncoursed) conforming to Section 1400 of these Specifications or in cement concrete of M15 grade. The pitching/revetment shall be of stones in wire crates or cement concrete blocks in M15 grade. For protection of ties of bank slopes terminating either in short aprons at bed levels or anchored in flooring/rocky bed, the provision of Clause 8.2.2 of IRC:89 may be complied with.

2505 RUBBLE STONE/CEMENT CONCRETE BLOCK FLOORING OVER CEMENT CONCRETE BEDDING

2505.1 The work shall consist of constructing rubble stone/cement concrete block flooring laid over a bedding of cement concrete (M15).

2505.2 Construction Operations

Excavations for laying the bedding and floor protection works shall be carried out as per specifications under proper supervision. Before laying the foundation and protection walls, the excavated trenches shall be inspected by the Engineer to ensure that:

a) There are no loose pockets and unfilled depressions left in the trench.

b) The soil at the founding level is properly compacted to true lines and level so as to have an even bedding.

c) All concrete and other elements are laid in dry bed.

Bedding of cement concrete nominal mix (grade M15) of 300 mm thickness shall then be laid in accordance with Section 1700 of these Specifications except that the surface of the concrete shall not be given a smooth finish.

Flooring shall consist of 150 mm thick flat stone/cement concrete block M15 grade conforming to Section 1700 of these Specifications. It shall be bedded on a layer of cement mortar (1:3) prepared to Section 1300 of these Specifications. Spalls shall be used to fill in the voids. The joints shall be filled with cement mortar and finished neat. The stone shall break joints and the thickness of joints shall not exceed 20 mm. The top of flooring shall be kept 300 mm below the lowest bed level.

2506 DRY RUBBLE FLOORING

Dry rubble flooring shall be provided for relatively less important works such as cross drainage structures.

The base for the flooring shall be prepared to the specified levels and slopes and compacted suitably with hand rammers or other means to have even bedding.

The stones shall be laid closely on the prepared base in one or more layers with appropriate bond as specified by the Engineer.

2507 CURTAIN WALL AND FLEXIBLE APRON

2507.1 Curtain Wall

The rigid flooring shall be enclosed by curtain walls (tied to the wing walls) with minimum depth below floor level of 2 m on upstream side and 2.5 m on downstream side. The curtain wall shall be in cement concrete M15 grade or stone masonry in cement mortar 1:3.

2507.2 Flexible Apron

Flexible apron 1 m thick comprising loose stone boulders (weighing not less than 40 kg) shall be provided beyond curtain walls for a minimum distance of 3 m on upstream side and 6 m

on downstream side. The work of floor protection shall be simultaneously completed along with the work on bridge foundations.

2508 TESTS AND STANDARDS OF ACCEPTANCE

The materials shall be tested in accordance with these Specifications and shall meet the prescribed criteria.

The work shall conform to these Specifications and shall meet the prescribed standards of acceptance.

2509 MEASUREMENTS FOR PAYMENT

The earth work in construction of embankment for guide bund shall be measured in cubic metres unless otherwise specified.

The boulders/cement concrete block and boulder/block filled wire crates in apron shall be measured in cubic metres.

The filter and stone pitching shall be measured separately in cubic metres unless otherwise specified.

Rubble stone/cement concrete block flooring and cement concrete bedding shall be measured in cubic metres for each class of material.

Preparation of base for laying the flooring shall be deemed incidental to the work.

For laying apron, excavation upto an average depth of 150 mm shall be deemed to be included in the main item and shall not be measured separately unless otherwise specified. Excavation more than 150 mm shall be measured in cubic metres as per Section 300 of these Specifications.

If directed by the Engineer, the materials shall have to be stacked at site before laying and such stacking shall be considered incidental to the work.

2510 RATE

The contract unit rate for the construction of embankment for guide bund shall cover the cost of all materials including transportation, laying, compacting, all labour, tools, equipment, sampling and testing, supervision and all incidentals necessary for completing the work according to these Specifications.

The contract unit rate for apron shall include the cost of all material, labour, tools and plant for completing the work according to these Specifications. Excavation up to an average depth of 150 mm shall also be deemed to be included in the rate as dressing of the bed. Excavation beyond the depth of 150 mm shall be paid for separately unless otherwise specified.

The contract unit rate for stone/cement concrete block pitching on slopes shall include the cost of preparing the bases, laying and compacting the filter and placing of stone pitching of dry rubble/cement concrete block revetment for embankment slopes to the specified thickness, lines, curves, slopes and levels and all labour and materials as well as tools and plant required for the work.

The contract unit rate for rubble stone/cement concrete block flooring shall include the cost of all material, labour and tools and plant for completing the work as per specifications for the relevant item.

Appendix 2500/I
(Refer Clause 2503.3.1.4)
Mechanically Woven Wire Crates for Gabions and Matresses

1. Terminology

Double twisted wire mesh: a non-ravelling mesh made by twisting continuous pairs of wires through three one-half turns (commonly called double-twisted) to form hexagonal shaped openings which are then interconnected to adjacent wires to form hexagonal openings.

Gabion: a double-twisted wire mesh container of variable sizes, uniformly partitioned into internal cells, inter-connected with other similar units, and filled with stone at the project site to form flexible, permeable monolithic structures for earth retaining and erosion control projects (Fig. 1).

Revet Mattress: a double-twisted wire mesh container uniformly partitioned into internal cells with relatively smaller height in relation to other dimensions, having smaller mesh openings than the mesh used for gabions; revet mattresses are generally used for riverbank protection and channel linings (Fig. 2).

Selvedge Wire: a terminal wire used to edge the wire mesh perpendicular to the double twist by mechanically wrapping the mesh wires around it at least 2.5 times (Fig. 3).

Edge Wire: a terminal wire of the same diameter as the selvedge wire used to edge the wire mesh parallel to the double twist by continuously weaving it mechanically into the wire mesh (Fig. 3).

Lacing Wire: a galvanized wire or galvanized wire with PVC coating used to assemble and interconnect empty units, to close and secure stone-filled units, and for internal stiffeners (Fig. 4).

Diaphragm: an internal partition made of same double twisted wire mesh panel in a gabion/ revet mattress that is attached to the bottom, the sides, and, after the gabion cage is packed with stones, to the lid of the cage (Fig. 1).

Bracing Wire: a length of galvanized wire or galvanized wire with PVC coating used for support of facing by connecting the front panel to the back panel of a gabion and having the same diameter as the lacing wire (Fig. 5).

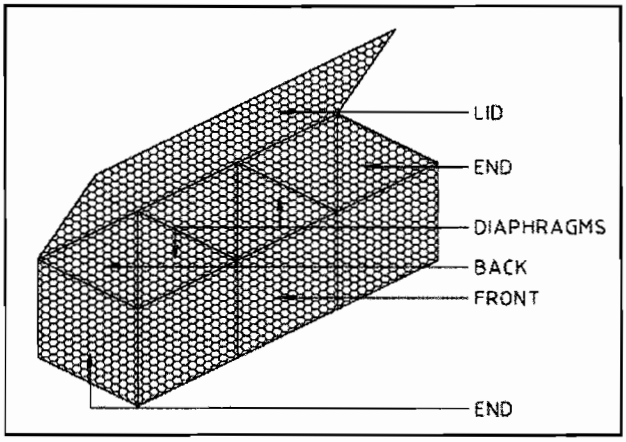

Fig. 1 Gabion Box

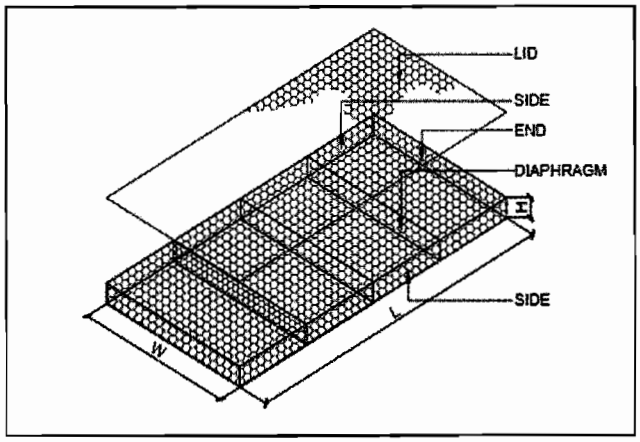

Fig. 2 Revet Mattress

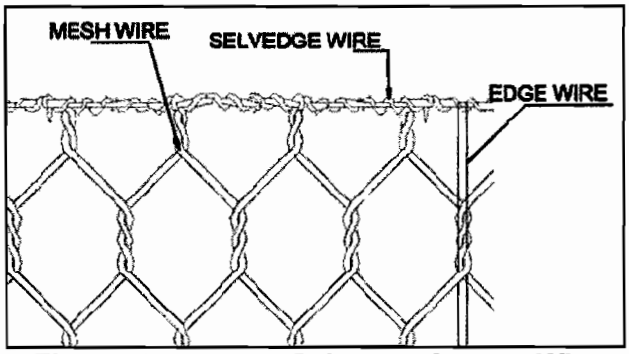

Fig. 3 Mesh Wire, Selvedge & Edge Wire

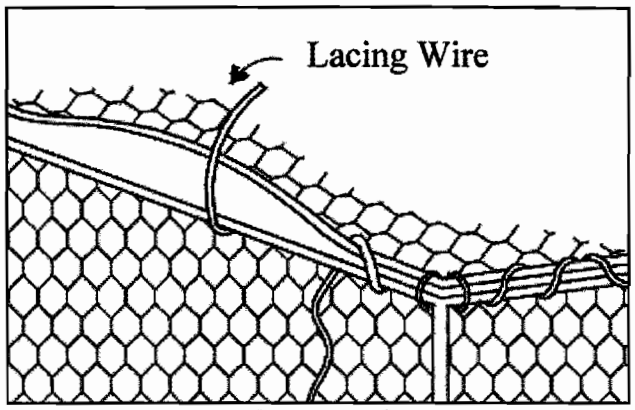

Fig. 4 Lacing Wire for Typing

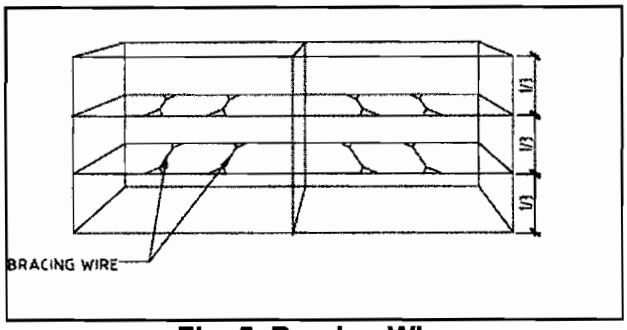

Fig. 5 Bracing Wire

2 Mechanical Properties

Minimum strength requirements of the mesh when tested in accordance with Para 5, shall be as shown in Table-2500/1.

Table-2500/1 : Minimum Strength Requirements of Mesh and Connections

Mesh Type	10 x 12			8 x 10		6 x 8	
Characteristics	Zn	Zn	Zn+PVC	Zn	Zn+PVC	Zn	Zn+PVC
Mesh Wire Dia. (mm)	2.7	3.0	2.7	3.0	2.7	2.2	2.2
Parallel to twist (kN/m)	32.0	40.0	32.0	51.1	42.3	33.6	33.6
Perpendicular to twist (kN/m)	15.4	20.5	15.4	26.3	20.4	13.1	13.1
Connection to Selvedges	10.2	11.22	10.2	20.4	16.32	10.2	10.2
Panel to Panel Connection using lacing wire or fasteners	10.2	11.22	10.2	20.4	16.32	10.2	10.2
Punch Test	17.8	19.58	17.8	26.7	21.36	17.8	17.8

3 Physical Properties

3.1 Mass of Zinc Coating

The coating weights shall conform to the requirements of IS:4826 Heavily Coated and soft type. Refer Table-2500/2 for the minimum mass of zinc coating for different wire sizes.

Table-2500/2 : Minimum Mass of Zinc Coating

Nominal Diameter of Galvanized wire, mm	Mass of Zinc Coating, gms/m^2
2.00	240
2.20	240
2.40	260
2.70	260
3.00	270
3.40	270
3.90	280

3.2 Adhesion of Zinc Coating

The zinc coating shall remain adherent to the steel wire and conform to IS:4826 such that zinc coating does not flake off, nor crack to such an extent that there is possibility of removing any zinc by rubbing with bare fingers, the use of finger nails being not allowed.

3.3 PVC for Coating

The initial properties of PVC coating material shall have a demonstrated ability to conform to the following requirements

i) Specific Gravity: In the range from 1.30 to 1.35 when tested in accordance with Test Method IS:13360:Part 3:Sec 1:1995/ISO 1183:1987.

ii) Tensile Strength: Not less than 20.6 MPa when tested in accordance with Test Method IS:13360:Part 5:Sec 1:1996/ISO 527 1:1993.

iii) Hardness : Shore "D" between 50 and 60, when tested in accordance with Test Method IS:13360:Part 5:Sec 11:1992/ISO 868.

iv) Resistance of PVC coating to Sodium Chloride Solution: When PVC coated wire is tested in accordance with Para 5.4 , there shall be no loss of mass.

4. Number of Tests

i) The tensile strength, galvanizing weight, and PVC coating thickness of the coated steel wire used in the fabrication of mesh, lacing wire and

stiffeners shall be certified by the steel wire/ PVC Coated steel wire producers for conformance to the requirements of Para 3 above.

ii) A minimum of three tests each for conformance to strength of galvanized steel wire mesh parallel to twist and perpendicular to twist shall be performed. A retest for conformance with the aforementioned strength tests shall be required when changes of the physical characteristics of the mesh products occur. For galvanized steel wire with PVC coating, the same requirements as for the galvanized steel wire mesh shall be followed. The results of all three tests must meet the requirements of Table-2500/1.

5 Test Methods

5.1 Tensile Strength of Wire Mesh Panel

The wire mesh specimens shall be representative of proper field construction as to materials, mesh geometry, and workmanship, and shall be as large as practical to minimize the effect of variations. The tests shall be run with the load applied parallel to the axis of the twist and repeated on a separate test specimen with the load applied perpendicular to the axis of the twist.

Place the mesh into the machine grips such that the gripped mesh will be maintained in the mesh geometry characteristic of field use. The specimen of approximately 0.8 m width and 0.5 m height shall be tested. The effective width to be considered for test specimen shall be the distance between two extreme gripping points. The specimen should extend by at least one mesh repetition beyond the extreme gripping points on either side. However, specimen should not extend more than two mesh repetitions beyond extreme gripping points. The mesh shall be pre-loaded to 10 percent of the specified minimum strength and machine head travel stopped. The mesh gauge dimensions shall be recorded at this time and taken as the initial dimensions of the specimen where such dimensions are required. If the sample slips at any of the gripping point during the test, such a test shall be discarded and a new sample shall be taken. The loading shall then continue uniformly maintaining the displacement rate of 75 to 100 mm per minute, until first fracture or unwrapping of an individual wire in the system occurs. The distortion of the mesh or changes in gauge length shall be measured to accuracy consistent with reporting the percent elongation to the nearest 0.5 percent.

5.2 Punch Test

The punch test could be done using two different apparatus.

i) **Pre-Tensioned Punch Test**

An uncut section of 1.82 m in length (unselvedged) and not less than 0.91 m in width shall have the ends securely clamped for 0.91 m along

the width of the sample. When the width of the section under test exceeds 0.91 m, the clamps shall be centered along the width and the excess width will be allowed to fall free on each side of the clamped section. The sample shall then be subjected to tension sufficient to cause 10 % elongation of the sample section between the clamps. After elongation and while clamped as described above (and otherwise unsupported), the section shall be subjected to a load over 960 cm^2 of area applied to the approximate center of the sample section between the clamps and in a direction perpendicular to the direction of the tension force.

ii) **Secured Punch Test**

An uncut section of 1.24 m in length and not less than 0.9 m in width (selvedged), including all selvedge bindings, shall have the sides and the ends securely clamped at every mesh opening to a rigid frame. After being secured as described above, the section shall be subjected to a load over 960 cm^2 applied to the approximate center of the sample section between the clamps and in a direction perpendicular to the direction of the tension force.

The sample shall withstand, without rupture of any strand or opening of any mesh fastening, an actual load applied by means of a circular ram at a uniform rate not to exceed 220 N/s equalling or exceeding the values shown in Table-2500/1. The ram head used in the test shall be circular with a 350 mm diameter and have its edges bevelled or rounded to prevent cutting of the wire strands.

iii) **Pull-Apart Resistance Test**

A set of two identical rectangular gabion panels, each with a width about $10\frac{1}{2}$ mesh openings along a selvedge wire, shall be joined by properly installed wire fasteners along the two selvedge wires so that each fastener confines two selvedge and two mesh wires. If the fasteners are also to be used to join two individual empty gabion baskets, two additional selvedge wires that are each mechanically wrapped with mesh wires shall be included so that each fastener confines four selvedge and four mesh wires. The set of the jointed panels shall be subject to pull-apart resistance test.

The specimen shall be mounted on a loading machine with grips or clamps such that the panels are uniformly secured along the full width. The grips or clamps shall be designed to only transmit tension forces. The load will then be applied at a uniform rate not to exceed 220 N/s until failure occurs. The failure is defined as when the maximum load is reached and a drop of strength is observed with subsequent loading or alternately the opening between any two closest selvedge wires, applicable to a fastener confining either two or four selvedge wires, becomes greater than 50 mm at any place along the panel width. The strength requirements of the jointed panels at failure shall be as shown in Table-2500/4.

5.2 Metallic Coating Weight

Coating weight tests and adhesion tests shall be performed as per IS:4826.

5.3 PVC Coating Thickness

i) The thickness of the PVC coating shall be determined on a randomly chosen individual piece of wire removed from the mesh.

ii) Measure with a micrometer the diameter of the metallic coated steel wire with PVC coating. Determine the thickness of the PVC coating by stripping the PVC coating from the wire and measure the reduced diameter with a micrometer. The thickness of the coating is the difference between the diameter of the metallic coated steel wire with PVC coating and the measured diameter of the metallic coated steel wire divided by two. The average value should be in accordance with Tables 2500/2, and 2500/3 of Specifications for gabions and revet mattresses respectively. When removing the PVC coating by stripping, care shall be taken not to remove any of the metallic surface.

2600

EXPANSION JOINTS

2601 DESCRIPTION

The work shall consist of fabrication and installation of expansion joints. The filler joint, asphaltic plug joint, compression seal joint and reinforced elastomeric joint of slab seal, strip seal and box seal type shall conform to these Specifications.

2602 GENERAL

2602.1 The type of expansion joint proposed to be used shall conform to the design and got approved by the Engineer.

2602.2 Expansion joints shall be robust, durable, water-tight and easy for inspection, maintenance and replacement. Site fabricated expansion joints shall be prohibited. Expansion joints shall be procured from approved manufacturers and shall be of proven type.

2602.3 Alternative proprietary type deck joints proposed by the Contractor in lieu of the type specified shall comply in all respects with the manufacturer's specifications and meet the required range of movements and rotations and be fit for the purpose of ensuring satisfactory long term performance. For such proprietary type deck joints the following information shall be provided.

i) Name and location of the proposed manufacturer.

ii) Dimensions and general details of the joint including material specifications, holding down bolt or anchorage details and installation procedures.

iii) Evidence of satisfactory performance under similar environmental conditions of similar joints being produced by the manufacturer.

Acceptance of any alternative type of expansion joint shall be at the sole discretion of the Engineer. Such deck joints shall be installed in accordance with the manufacturer's recommendations and to the requirements of these Specifications.

Vehicular traffic shall not be allowed over expansion joints after their installation for such period as may be determined by the Engineer.

2602.4 The expansion joint shall be provided to cover the entire carriageway, kerb and footpath, wherever provided. It shall follow the profile of the deck including the kerb, footway and facia. The expansion joint for kerb, footway and facia may be of different type and specification from that used for the carriageway and it shall cater to all movements and rotations for which the carriageway expansion joint is designed and shall be water tight.

2603 PERFORMANCE REQUIREMENTS

2603.1 The expansion joint proper and the transition zone (the zone of connection of joint assembly and the adjoining deck) shall satisfy the performance requirements specified herein. The expansion joint proper shall satisfy the performance requirements of both the bridge structure and the road users.

2603.2 Performance Requirements with Respect to Bridge Structure

The expansion joint shall:

i) withstand the imposed loads including the impact load from live load and other sources,

ii) allow expansion and contraction movement due to temperature, creep, shrinkage, pre-stressing and structural deformations,

iii) permit relative rotation in elevation and plan due to the causes mentioned above,

iv) be waterproof,

v) be properly sealed,

vi) ensure long life by being resistant to corrosion,

vii) be easy to install,

viii) be easy to maintain.

ix) be easy to replace. and

x) be resistant to the materials likely to collect/spill over the deck in its normal service.

2603.3 Performance Requirements with Respect to User

The expansion joint shall:

i) provide smooth continuity at the top of the deck for riding comfort,

ii) be skid resistant,

iii) be non-damaging to rubber tyres,

iv) make little or no noise during passage of vehicules,

v) ensure that animal paws and hooves do not get entangled when used by animal drawn traffic,

vi) permit passage of steel tyre of bullock carts without being damaged, and

vii) look good aesthetically.

2603.4 Performance Requirements for Transition Zone

The expansion joint shall:

i) permit transfer of generated forces to the deck without distress, i.e., without getting uprooted, and

ii) ensure that surface in the transition zone stays undisturbed during long term service.

2604 FILLER JOINTS

2604.1 Components

The components of this type of joint shall be corrugated copper plate at least 2 mm thick placed slightly below the wearing coat, 20 mm thick compressible fiber board to protect the edges, 20 mm thick pre-moulded joint filler filling the gap up to the top level of the wearing coat and sealant of suitable joint sealing compound.

2604.2 Material

i) The material used for filling expansion joint shall be bitumen impregnated felt, elastomer or any other suitable material, as specified on the drawings. Impregnated felt shall conform to the requirements of IS:1838, and shall be got approved from the Engineer. The joint filler shall consist of large pieces. Assembly of small pieces to make up the required size shall be avoided.

ii) Expansion joint materials shall be handled with care and stored under cover by the Contractor to prevent damage.

iii) Any damage occurring after delivery shall be made good to the satisfaction of the Engineer and at the expense of the Contractor.

2604.3 Fabrication and Installation

i) Joint gaps shall be constructed as shown on the drawings. Surfaces of joint grooves shall be thoroughly cleaned with a wire brush to remove all loose materials, dirt and debris, then washed or jetted out.

ii) Pre-moulded expansion joint filler shall not be placed in position until immediately prior to the placing of the abutting material. If the two adjacent faces of the joint are to be installed at different times, the joint filler shall be placed only when the second face is ready to be kept in position

iii) Sealants shall be installed in accordance with the manufacturer's recommendations.

iv) Sealants shall be finished approximately 3 mm below the upper surfaces of the joint.

v) Joint materials spilt or splashed onto finished surfaces of the bridge during joint filling operations shall be removed and the surfaces made good to the Engineer's approval.

vi) No joint shall be sealed until inspected by the Engineer and approval is given to proceed with the work.

2605 REINFORCED ELASTOMERIC JOINT

2605.1 Components

Reinforced elastomeric expansion joint shall comprise of following components:

i) **Steel Inserts :** The elastomeric slab units shall be fixed to the steel inserts properly anchored in the deck concrete. Fixing of elastomeric slab units with anchoring bolts directly embedded in deck concrete shall not be permitted. Steel inserts along with anchorage shall be fabricated at manufacturer's workshop and not at site.

ii) **Anchorage :** The anchorage shall either be loop anchors connected to the inserts by anchor plate or sinusoidal anchor bars welded with the horizontal leg of the steel inserts. For loop anchors with anchor plate, the thickness of the anchor plate shall not be less than 12 mm. Diameter of anchor loops shall not be less than 16 mm and the spacing of anchors shall not be more than 250 mm. For sinusoidal anchors, diameter of bar shall not be less than 12 mm.

iii) **Fixing Bolts :** Fixing bolts and nuts shall be made of stainless steel. Tightened nuts shall be locked by using lock washers.

iv) **Elastomeric Plugs :** The plug holes provided in elastomeric slab units to house fixing bolts shall be plugged with elastomeric plugs pressed in position after applying adhesive on the surfaces.

v) **Adhesives and Sealants :** Special sealant to be poured into the plug holes before plugging and special adhesive to be used for installation, shall be as per the recommendation of manufacturer.

vi) Necessary spacer bars to ensure proper positioning of bolts and leveling and aligning steel inserts during fixing with deck as well as special jigs to be used to preset the elastomeric slab units, shall be provided by the manufacturer.

2605.2 Material

i) Mild steel to be used for manufacture of steel reinforcing plates, inserts and anchorage shall comply with Grade B of IS:2062.

ii) Cast steel to be used for manufacture of steel reinforcing plates shall comply with IS:1030.

iii) The elastomer to be used for manufacture of elastomeric slab units shall comply with Clause 915.1 of IRC:83 (Part II), compounded to give hardness IRHD 60 ± 5.

2605.3 Fabrication

i) All surfaces of the steel inserts and anchorage including the surfaces to be in contact with or embedded in concrete shall be sand/shot blasted to SA 2½ and provided with a coat of epoxy primer enriched with metallic zinc. Surfaces not to be in contact with or embedded in concrete shall be provided with an additional coat of epoxy primer enriched with metallic zinc, one intermediate coat of high build epoxy paint reinforced with MIO (Micaceous Iron Oxide) and one coat of high performance epoxy finish paint as per manufacturer's specification with minimum total dry film thickness of 150 micron.

ii) Elastomeric slab units shall be fully moulded to the required size in one single vulcanizing operation including the reinforcing plates and encasing layers as one integral and homogeneous unit. Edges of reinforcing steel sections shall be rounded. The elastomeric slab units shall be manufactured generally as per the stipulations laid down in Clause 917 of IRC: 83 (Part II). Adjoining portions of elastomeric slab units shall be provided with suitable male-female groove to ensure water tightness.

iii) Permissible tolerances of fabrication shall be as follows:

Plan dimension	:	± 5 mm
Total height	:	± 3 mm

2605.4 Supply and Handling

i) The Contractor shall supply all steel-reinforced elastomeric expansion joints including bolts, nuts, sealant, plugs and all other accessories for the effective installation of the joints including angled jointing sections for kerbs.

ii) Expansion joint material shall be handled with care and stored under cover by the Contractor to prevent damage. Any damage occurring after delivery shall be made good at the expense of the Contractor to the satisfaction of the Engineer.

2606 SINGLE STRIP/BOX SEAL JOINT

2606.1 Components

Strip seal expansion joint shall comprise the following:

i) **Edge Beam :** This shall be either extruded or hot rolled steel section including continuously shop welded section with suitable profile to mechanically lock the sealing element in place throughout the normal movement cycle. Further, the configuration shall be such that the section has a minimum thickness of 10 mm all along its cross section (flange and web). Thickness of lips holding the seal shall not be less than 6 mm. The minimum height of the edge beam section shall be 80 mm. The minimum cross sectional area of the edge beam shall be 1500 mm^2.

ii) **Anchorage :** The edge beams of single strip/box seal joints shall be anchored in the concrete with rigid loop anchorage. The anchor loops shall be connected to the edge beam by means of anchor plate welded to the edge beam. Total cross sectional area of anchor loop on each side of the joint shall not be less than 1600 mm^2 per metre length of the joint and the centre to centre spacing shall not exceed 250 mm. The thickness of anchor plate shall not be less than 0.7 times the diameter of anchor loop or 12 mm whichever is higher. The anchor loop at the edge profiles should be at right angles to the joint. Planned deviations of this direction are allowable only for the range of $90^o \pm 20^o$. The anchoring reinforcement of the construction must lie parallel to the anchor loops.

iii) **Sealing Element :** This shall be a preformed/extruded single strip of such a shape as to promote self-removal of foreign material during normal joint operation. The seal shall possess high tear strength and be insensitive to oil, gasoline and ozone. It shall have high resistance to ageing. The specially designed proprietary type of locking system of seal in the housing of edge beam shall be such as to ensure 100% water tightness as well as ease of installation and replacement. Mechanical fastening of sealing element with edge beam shall not be permitted. Sealing element shall be continuous over the entire joint.

The working movement range of the sealing element shall be at least 80 mm with a maximum of 100 mm at right angles to the joint and ± 40 mm parallel to the joint.

Minimum gap for inserting the Chloroprene seals in the expansion joint shall be 25 mm.

2606.2 Material

i) The steel for edge beams shall conform to any of the steel grade equivalent to RST 37-2 or 37-3 (DIN), S235JRG2 or S355K2G3 of EN10025 (DIN 17100), ASTM A 36 or A 588, CAN/CSA Standard G40.21 Grade 300 W and Grade B of IS:2062. For subzero condition, material for steel shall conform to IS:2062 Grade C.

ii) The sealing element shall be made of Choloroprene Rubber (CR). The properties of CR shall be as specified in Table 2600-1.

iii) Anchorage steel shall conform to Grade B of IS:2062 or equivalent standard.

Table 2600-1 : Properties of Chloroprene Seal

Property	Standard	Specific Value
Hardness	DIN 53505 ASTM D 2240 *	63 + 5 Shore A 55 + 5 Shore A
Tensile Strength	DIN 53504 ASTM D 412*	Min 11 MPa Min 13.8 MPa
Elongation at fracture	DIN 53504 ASTM D 412*	Min 350% Min 250%
Tear propagation strength longitudinal transverse	DIN 53507 ASTM D 624* (Dia C)	Min 10N/mm Min 10N/mm
Shock elasticity	DIN 53512	Min 25%
Abrasion	DIN 53516	Max 220 mm^3
Residual compression strain (22h/70°C/30% strain)	DIN 53517 ASTM D 395* (Method B)	Max 28%
Ageing in hot air (14 days/70°C) Change in hardness Change in tensile strength change in elongation at fracture	DIN 53508	Max + 7 Shore A Max – 20% Max – 20%
Ageing in ozone (24h/50pphm/25°C/20% strain)	DIN 53509	No cracks
Swelling behavior in oil (168h/25°C) ASTM oil No. 1 Volume Change Change in hardness ASTM oil No. 3 Volume Change Change in hardness	DIN 53521	 Max + 5% Max – 10 Shore A Max + 25% Max – 20 Shore A
Cold hardening point	ASTM D 1043	Min -35°C

Note : * Only one specification viz., ASTM or DIN shall be followed depending on the source of supply.

2606.3 Fabrication (Pre-installation)

i) Rolled steel profiles for edge beams shall be long enough to cater for the full carriageway width. These shall be cut to size as per actual requirements. Alignment of the steel profiles shall then be made on work tables in accordance with the actual bridge cross-section. For this purpose, the contour of bridge cross-section shall be sketched on the tables. After the steel profiles are aligned, these will be fixed to the tables by means of screw clamps and tacked by arc welding.

ii) Anchor plates shall be cut to the required size by gas cutting. These shall be welded to the edge beams.

iii) Anchor loops shall be bent to the required shape and welded to anchor plates.

iv) All steel sections shall be protected against corrosion by either hot dip galvanizing with a minimum thickness of 150 micron or by epoxy coating.

v) All surfaces of the steel inserts and anchorage including the surfaces to be in contact with or embedded in concrete shall be given treatment as mentioned in Clause 2605.3 (i).

vi) The finally assembled joints shall then be clamped and transported to the work site.

2606.4 Handling and Storage

i) For transportation and storage, auxiliary brackets shall be provided to hold the joint assembly together.

ii) The manufacturer shall supply either directly to the Engineer or to the Contractor all the materials of strip seal joints including sealants and all other accessories for the effective installation of the joint.

iii) Expansion joint material shall be handled with care. It shall be stored under cover on suitable wooden padding to prevent damage. Any damage occurring after delivery shall be made good at the cost of Contractor to the satisfaction of the Engineer

2607 MODULAR STRIP/BOX SEAL EXPANSION JOINTS

2607.1 Components

A modular expansion joint shall consist of two or more modules/cells of individual capacity 80 mm to cater to a horizontal movement in excess of 80 mm. It shall allow movements in all three directions and rotation about all three axes as per the design requirements. The structural system shall consist of two edge beams, one or more central/separation beams or

lamellas and cross support bars supporting individuals or multiple central beams to transfer the loads to the bridge deck through the anchorage system.

i) **Edge Beams and Central Beams/Lamella :** These shall be as per Clause 2606.1(i).

ii) **Anchorage :** Anchorage of edge beam shall be as per Clause 2606.1 (ii). Studs and/or loop anchors with anchor plate may be used as anchorage of other components like joist box and covers of controlling system.

iii) **Sealing Element :** This shall be as per Clause 2606.1 (iii). Minimum gap for inserting the neoprene seals in the expansion joint shall be 25 mm.

iv) **Support and Control System :** The control system should allow closing and opening of the joint and also ensure that all modules open and close equally during all movement cycles of the joint. The overall support and control system shall be either single/multiple support bar control system or swivel joint system comprising of resilient/shock absorption components and elastic/sliding control system conforming to the specifications recommended by the manufacturer. The gap between the consecutive centre beams at the joint surface shall be limited to 80 mm when the joint opens fully due to maximum contraction of deck.

2607.2 Material

i) The steel for edge beams, centre beam/lamella, transverse support bar and other steel components shall conform to any of the steel grade corresponding to RST 37-2 or 37-3 or 52-3 (DIN), S235JRG2 or S355K2G3 of EN10025 (DIN 17100), ASTM A36 or A588, CAN/CSA standard G40.21 Grade 300 W.

ii) The sealing element shall be of Chloroprene Rubber (CR). The properties of CR shall be as specified in Table 2600-1.

iii) The specification for all other materials shall be as per manufacturer's recommendation.

2607.3 Fabrication (Pre-installation)

i) Profile of edge beam, centre beam/lamella shall be long enough to cater for full carriageway width.

ii) The fabrication of all components of the joints including anchorage system and transportation of assembled joints shall be as per manufacturer's specification.

iii) All steel sections shall be suitably protected against corrosion as stated in Clause 2606.3 (iv).

iv) All surfaces of the steel inserts and anchorage including the surfaces to be in contact with or embedded in concrete shall be given treatment as mentioned in Clause 2605.3 (i).

2607.4 Handling and Storage

i) Arrangement for transportation and storage shall be as per manufacturer's specification.

ii) The manufacturer shall supply either directly to the Engineer or to the Contractor all the materials of strip seal joints including all sealants and other accessories for the effective installation of the joint.

2608 ASPHALTIC PLUG JOINT

2608.1 General

i) This joint shall consist of a polymer modified bitumen binder, carefully selected single size aggregate, closure/bridging metallic plate and heat resistant foam caulking/backer rod

ii) The joint shall be capable of performing satisfactorily, within the temperature (ambient) range of -5°C to +50°C.

2608.2 Material

i) **Binder:** The polymer modified bitumen binder shall have the capacity to fill the gaps and voids between single size aggregates and to impart flexibility to accommodate various design movements. It shall be a patented blend of bitumen, synthetic polymer, filler and surface active agent and shall be so formulated as to combine necessary fluidity for the installation process, low temperature flexibility and flow resistance at high ambient temperature. The binder shall satisfy following requirement:

- Softening point : 100°C minimum
- Cone penetration at 25°C, 0.1 mm (BS:2499) : 100 mm max
- Flow resistance at 70°C, 5 hours (BS:2499) : 3 mm max
- Extension Test 5 cycle of extension to 50% (blocks prepared to ASTM D1190 at a rate of 3.2 mm/hour at and tested to limits BS:2499) : 25°C
- Safe heating temperature. : 210°C

ii) **Aggregates :** The aggregate shall be of single size chosen from basalt granite, grit stone or gabro group. The nominal size of aggregate shall be 12.5 mm for joints up to 75 mm depth and 20 mm for joints of larger depth. The flakiness index shall not be more than 25 percent. The aggregate shall satisfy grading requirements stipulated in Table 2600-2.

Table 2600-2 : Grading Requirements of Aggregate

IS Sieve Designation	Nominal Size of Aggregate	
	20 mm	25 mm
	Percentage by Weight Passing the Sieve	
26.5 mm	100	-
19.9 mm	85 - 100	100
13.0 mm	0 - 35	85 – 100
9.5 mm	0 - 7	0 – 35
6.3 mm	-	0 – 7
2.3 mm	0 - 2	0 – 2
75 micron	0 - 1	0 – 1

The Polished Stone Value (PSV), Aggregate Abrasion Value (AAV), Aggregate Impact Value (AIV) and Aggregate Crush Value (ACV) shall be as below:

PSV > 60

AAV > 05

AIV < 18

ACV = 10-25

The surface characteristics should promote proper adhesion.

iii) **Closure Plate :** The closure plate shall be weld able structural steel conforming to IS:2062. The minimum thickness of steel plate shall be 6 mm and the width shall not be less than 200 mm. Closure plate shall preferably be of single length but it shall not have more than 2 pieces per traffic lane width which shall be welded together to form the required length. It shall be provided with equidistant holes at a maximum spacing of 300 mm centers for anchorage to the caulking/ backer rod along the longitudinal centre line of the plate. The plate shall be protected against corrosion by galvanizing or by any other approved anti-corrosive coating paint with a minimum thickness of 100 micron.

iv) **Foam Caulking/Backer Rod:** The foam caulking shall be closed cell polyolefin or open cell polyurethane foam cylindrical type. The backer rod shall be of diameter equal to 150 percent of the joint opening. It shall be heat resistant and possess good flexibility and recovery characteristics with density of 25 kg/m^3 to 30 kg/m^3.

2609 COMPRESSION SEAL JOINT

2609.1 Components

i) Compression seal joint shall consist of steel armoured nosing at two edges of the joint gap suitably anchored to the deck concrete and a preformed chloroprene elastomer or closed cell foam joint sealer compressed and fixed into the joint gap with special adhesive binder.

ii) **Steel Nosing :** The steel nosing shall be of angle section ISA 100 x 100. The thickness of legs shall not be less than 12 mm. The top face of the angle shall be provided with bleeder holes of 12 mm diameter spaced at maximum 100 mm centres so as to ensure that there are no voids in the concrete beneath the angle.

iii) **Anchorage :** The steel nosing shall be anchored to the deck by headed shear studs or anchor plates cast in concrete or a combination of anchor loops. Anchor bars shall engage the main structural reinforcement of the deck and in case of anchor plates and anchor loops, transverse bars shall be passed through them. The minimum thickness of anchor plates shall be 12 mm. Total cross sectional area of bars on each side of the joint shall not be less than 1600 sq. mm per metre length of the joint and the centre to centre spacing shall not exceed 250 mm for loop anchors and 150 mm for headed shear studs. The ultimate resistance of each anchorage shall not be less than 600 in kN/m any direction. Steel shall conform to Grade B of IS:2062. For sub zero condition material for steel shall conform to IS:2062, Grade C.

iv) **Joint Seal :** The sealing element shall be a preformed continuous chloroprene/closed cell foam seal with high tear strength, insensitive to oil, gasoline and ozone. It shall have high resistance to ageing and ensure water tightness. The seal should be continuous for the full length of the joint required for carriageway, kerbs and footpaths, if any. The seal shall cater for a horizontal movement upto 40 mm and vertical movement of 3 mm.

2609.2 Material

i) The steel for nosing and anchorage shall conform to weldable structural steel as per IS:2062 Grade B.

ii) The physical properties of chloroprene/closed cell foam sealing element shall conform to the following:

a) **Chloroprene Seal :** Shall be preformed extruded multi-web cellular section of chloroprene of such a shape as to promote self removal of foreign material during normal service operations. Chloroprene of joint seal shall satisfy the properties stipulated in Table 2600-1.

b) **Closed Cell Foam Seal :** This shall be of preformed non-extruded non-cellular section made from low density closed cell, cross linked ethylene vinyl acetate, polyethylene copolymer that is physically blown using nitrogen. The material shall have properties as indicated in the Table 2600-3.

Table 2600-3 : Properties of Closed Cell Foam Seal

Property	Value
Density	41.7 - 51.3 kg/cum
Compression set on 25 mm (ASTM D 3575)	50 percent compression samples for 22 hours at 23°C, 2 hour recovery; 13 percent set.
Working temperature	-70°C to +70°C
Water absorption (total immersion for 3 months) (ASTM 3575)	0.09766 kg/sq.m
Tensile Strength	0.8 MPa
Elongation at break (ASTM D 3575)	195 ± 20 percent

c) **Chemical Tests :** Chemical tests shall be performed on specimens of elastomer and the properties of elastomer shall conform to the values/standards indicated in Table 2600-4.

Table 2600-4 : Properties of Elastomer

Adhesion Strength	IS:3400 Part XIV	7kN/m
Low temperature stiffness	ASTM D 797	Young's modulus 70 N/mm^2 (max)
Ash Content	IS:3400 Part XXII	5%
Polymer identification test (infrared spectro photometry)	ASTM D 3677	Comparison of spectra with reference to sample of polychloroprene

iii) **Lubricant cum Adhesive :** The type and application of material used in bonding the preformed joint seal to the steel nosing and concrete shall be as recommended by the manufacturer/supplier of the seal system.

iv) **Corrosion Protection :** All steel sections shall be suitably protected against corrosion as stated in Clause 2606.3 (iv).

2610 INSTALLATION OF EXPANSION JOINTS

2610.1 General Procedure

i) Expansion Joints shall be installed under close supervision of the manufacturer's/supplier's engineer in order to ensure the quality of installation and its function as intended during the entire life span. Detailed Installation Manual shall be supplied by the manufacturer/ supplier.

ii) The dimensions of the recess in the deck shall be established in accordance with the drawings or design data of the manufacturer, taking into account the width of gap for movement of the joint.

iii) The pre-setting of expansion joint shall be done by means of an auxiliary construction.

iv) The road surfacing/wearing coat shall be laid before commencing installation of joint. Before laying wearing coat, the recess portion shall be filled with sand and wearing coat shall be laid in a continuous manner over the deck slabs and recess portion. Prior to installation of the joints, portion of wearing coat over the recess shall be removed by a suitable method e.g. saw cutting and the infill sand shall also be removed.

v) **Preparation of the Recess :** The size and form of recess shall suit the geometry of the expansion joint. However, the width shall not be less than the specified value for a particular type of joint. In order to avoid difficulties during installation, the following points must be checked and considered:

a) Dimension of recess

b) Levels

c) Skew and slope

d) Designed gap between bridge deck and abutment and/or between adjoining decks

e) Existing structural reinforcement according to the drawings

Reinforcing bars that would obstruct the installation of expansion joint shall be bent to accommodate the expansion joint anchorages. Cutting off or removal of interfering reinforcing bars shall only be done after consultation with the Engineer.

The recess shall be cleaned thoroughly. If necessary, the surface should be roughened. All loose dirt and debris shall be removed by wire brushing, air blowing and dried with hot compressed air.

vi) **Shuttering :** Shuttering must be used to seal the space between the underside of the joint and the vertical face of the recess. The shuttering must be fitted in such a way that it forms an appropriate seal against the edge of the recess. The recess shall be shuttered in such a way that dimensions shown on the drawing are maintained. The formwork shall be rigid and firm.

vii) **Placing in the Recess :** Level marks shall be set next to the recess. This enables a controlled leveling of the expansion joint. Lowering the expansion joint/joint construction/insert into the recess shall be done in such a way that the entire length of the joint is evenly lowered into the recess. Thereafter, the joint/joint construction/insert is precisely leveled and adjusted in the longitudinal, transverse and vertical planes. If required, the joint must also be adjusted to the gradient of the final surface level.

viii) **Connection**

a) The expansion joint/joint construction/insert shall be installed preferably in the early morning when the temperature is distributed almost uniformly over the whole bridge. Immediately before the installation, the actual temperature of the bridge shall be measured. If it is not within the considered tolerance, the preset adjustment shall be corrected. The joint/joint construction/insert shall be lowered in a predetermined position. Following placement of the joint/joint construction/insert in the prepared recess, the joint/joint construction/insert shall be leveled and finally aligned and the anchorage steel on one side of the joint welded to the exposed reinforcement bars of the structure. Upon completion, the same procedure shall be followed for the other side. With the expansion joint/joint construction/ insert finally held at both sides, the auxiliary brackets shall be released, allowing it to take up the movement of the structure. After carrying out the final fixing, the protection against corrosion shall be completed.

b) For fully assembled joints with one end fixed and other end movable e.g. modular strip/box seal joint, connection shall be as detailed below:

The 1st side : The fixed side of the assembled joint (either the abutment or the bridge deck side) is designated the 1st side for connecting the joint. The preliminary fixing is made by evenly placing and welding of reinforcing bars over the entire length between the anchor loops and the

deck reinforcement. To facilitate concreting, it the gap between recess and shuttering is sealed by a grout seam. The seam must be left to dry prior to final concreting. After this, additional reinforcing bars are welded until all anchor loops are firmly connected to the deck reinforcement. The expansion joint shall be considered sufficiently fixed when no vibration is noted when it is lightly tapped. The expansion joint shall not be subjected to any loads that could in any way displace the precise location of this fixing.

The 2nd side : Depending on the size of the expansion joint and the expected movement during installation, the most suitable time must be determined for fixing of the 2nd (moveable) side. Usually this is the early morning hours with the smallest temperature deviations. The procedure is identical to that for the 1st side. The joint shall be provisionally fixed to the reinforcement as fast as possible.

Immediately afterwards, the fixation brackets shall be removed. Thereafter, the gap between recess and shuttering shall be sealed with grout seam and the remaining reinforcing bars welded as described previously.

ix) **Concreting**

a) Prior to final concreting, the position of the joint/joint construction/ insert must be recorded. The Engineer must give written confirmation of the correct position of the joint and recess concreting. The recess shall be thoroughly watered. Before pouring the concrete the joint construction should be protected by a cover. Controlled concrete having strength not less than that in superstructure subject to a minimum of M35, shall be filled into the recess. The water cement ratio shall not be more than 0.4. If necessary, admixtures may be used to improve workability. The concrete must exhibit low shrinkage. The freshly placed concrete shall be properly vibrated. Damage to the shuttering shall be avoided during vibration. The concrete shall be finished flush with the carriageway surfacing. The concrete shall be kept damp until it has cured in order to avoid fissures caused by drying too fast. After the concrete has cured, the movable installation brackets and shuttering still in place shall be removed.

b) For modular strip seal joint the space beneath the joint boxes shall be completely filled with concrete. So that traffic loads are safely transmitted into the structure.

x) As soon as the concrete in the recess has become initially set, a sturdy ramp shall be placed over the joint to protect it from traffic at site.

Expansion joint shall not be exposed to traffic loading before completion of carriageway surfacing.

xi) The elastomeric sealing element may be field installed. For strip seal and modular strip seal joints the sealing element shall be in continuous lengths spanning the full carriageway width. Proper fit of the seal of the sealing element must be ensured. The seal shall be installed by suitable methods in such a way that it is not damaged.

2610.2 Specific Procedure for Asphaltic Plug Joint

i) The recess in the deck slab, if required, shall be repaired with epoxy mortar and cleaned and dried again.

ii) The foam caulking/backing rod shall be placed about 25 mm down into the joint opening.

iii) The aggregate shall be washed, cleaned and heated to a temperature between 120°C and 180°C prior to placement.

iv) The binder shall be preheated to temperature of 170°C to 190°C before application.

v) While sealing the joint opening with preheated binder, care shall be taken that the binder does not spill on to the surface of the deck.

vi) The joint shall not be installed when the ambient temperature goes below 5°C or above 35°C or while it is raining/ snowing. Planning for installation shall take into account the weather condition.

vii) When work is resumed after stoppage due to weather condition, the joint installation shall be continued after the upper layer and/or exposed surface of the partially completed joint has been prepared by heating and/or coating with binder as necessary.

viii) The joint shall be provided over the entire width of the structure including kerb and/or footpath. A recess in the kerb and/or footpath shall be made to allow the joint to pass beneath them. The expansion gap in the adjoining kerbs and/or footpaths shall be sealed with a suitable sealant such as polysulphide sealant.

ix) The joint shall extend to the full depth of the wearing course down to structural concrete. Where needed, a recess may be cut into the deck slab concrete to accommodate the minimum required depth (75 mm) of the joints.

x) The minimum width (in traffic direction) of the joint shall be 500 mm and maximum width shall be 750 mm.

xi) Minimum depth of joint shall be 75 mm and maximum depth shall not exceed 100 mm.

2610.3 Specific Procedure for Compression Seal Joint

i) The dimension of the joint recess and the width of the gap shall conform to the approved drawing.

ii) Anchoring steel shall be welded to the main reinforcement in the deck maintaining the level and alignment of the joint.

iii) The width of the recess shall not be less than 300 mm on either side of the joint. Care shall also be taken to ensure efficient bonding between already cast/existing deck concrete and the concrete in the joint recess.

iv) At the time of installation, joint shall be clean and dry and free from spalls and irregularities, which might impair a proper joint seal.

v) The lubricant cum adhesive shall be applied to both faces of the joint and joint seal prior to installation in accordance with the manufacturer's instructions.

vi) The joint seal shall be compressed to the specified thickness for the rated joint opening and ambient temperature at the time of installation which shall be between 5°C and 35°C.

vii) The joint seal shall be installed without damage to the seal. Loose fitting or open joints shall not be permitted.

2610.4 Specific Procedure for Single Strip/Box Seal Joint

i) The width of the gap to cater for movement due to thermal effect, pre-stress, shrinkage and creep, superstructure deformations (if any) and substructure deformations (if any) shall be determined and intimated to the manufacturer. Depending upon the temperature at which the joint is likely to be installed, the gap dimension shall be preset.

ii) Immediately prior to placing the joint, the pre-setting shall be inspected. In case the actual temperature of the structure is different from that taken for pre-setting, suitable correction shall be done. After adjustment, the brackets shall be tightened again.

iii) Rolled up neoprene strip seal shall be cut to the required length and inserted between the edge beams by using a crow bar pushing the bulb of the seal into the steel grooves of the edge beams.

iv) The carriageway surfacing shall be finished flush with the top of the steel sections. The actual junction of the surfacing/wearing coat with the steel edge section shall be formed by a wedge shaped joint with a sealing compound. The horizontal leg of the edge beam shall be cleaned beforehand. It is particularly important to ensure thorough and

careful compaction of the surfacing in order to prevent any premature depression forming in it.

2610.5 Specific procedure for Modular Strip/Box Seal Joint

i) The procedure given Clause 2610.4 (i) and (ii) applies to modular strip/box seal joint also.

ii) To ensure proper fit of the seal, dirt, spatter or standing water shall be removed from the steel cavity using a brush, scraper or compressed air.

iii) The actual junction of the surfacing/wearing coat with the block out concrete/steel edge section shall be cleaned beforehand. It is particularly important to ensure thorough and careful compaction of the surfacing in order to prevent any premature depression forming in it.

2610.6 Specific Procedure for Reinforced Elastomeric Joint

Expansion joints shall be installed as per approved drawing. The procedure for installation of various components shall be as follows:

i) **Steel Inserts**

a) Deck casting shall be done leaving pockets or recesses for steel inserts and anchors of the expansion joint as per drawing.

b) Steel inserts shall be lowered at the appropriate location inside the pocket.

c) The top of the insert shall be flush with the finished level of wearing course maintaining the camber.

d) Spacer bars, duly set appropriately to the month of installation, shall be fitted under proper supervision.

e) Anchor rods shall be tied/welded with the existing deck main reinforcement, maintaining level and alignment.

f) Welding between anchor rods and deck reinforcement is preferable. If welding is not possible, strong steel tie wires shall be used for fastening under proper supervision.

ii) **Spacer Bar**

a) Spacer bars shall be used to ensure proper positioning of bolts and also leveling of the steel inserts during fixing of the same with the deck reinforcement and casting second stage concreting in the pocket thereafter.

b) The 2nd stage concreting operation shall preferably be started within 24 hours of fixing the steel inserts. In such cases, spacer

bars should be removed just after concreting is finished. If there is a substantial time lag between fixing of inserts and concreting, then any one of the following methods shall be adopted, depending on the support condition:

For simply supported bridge resting on simple elastomeric bearings, (with no dowel pins), insert shall be placed in position with spacer bars at every alternate joints. Such joints shall be called restrained joints hereafter. In other words, inserts shall not be fixed simultaneously at two ends of one span. If the above condition is satisfied, inserts with spacer bars shall be kept in position for a substantially longer period at such restrained joints. Spacer bars shall be removed after concreting of such restrained joints and inserts placed in position with spacer bars at the other unrestrained joints thereafter.

For bridges resting on other than elastomeric bearings (including bearings with dowel pins at one end), after placing and aligning the inserts and securing the same, the spacer bars shall be removed. Concreting shall be done with great care so that inserts are not dislocated or distorted.

c) While removing the spacer bar after concreting, one must take care to see that the concrete is not damaged during withdrawal of spacer bar. If the spacer bar happens to be snugly fitted, it shall not be pulled by any means; it shall be gas cut in two pieces and then removed.

iii) **Concreting of Pocket**

a) Concreting of pocket shall be done with great care using proper mix conforming to grade similar to that of the deck casting besides ensuring efficient bonding between deck and steel insert. Also proper care shall be given for ensuring efficient bonding with the already cast concrete. Requirement of concrete as per Clause 2610.9.1 shall be followed.

b) Needle vibrators shall be used. Care shall be taken so that the position of steel insert is not disturbed during vibration.

c) Spacer bar shall be removed within an appropriate time before the joint is required to permit movement.

iv) **Fixing of Elastomeric Slab Unit (ESU)**

a) Special jig shall be used to preset the ESU during installation

b) ESU (mounted on the jig, if preset) shall be lowered to position.

c) The line and level on the ESU should be adjusted.

d) ESU shall be removed and coated with special adhesive

e) ESU shall be placed in position again, ensuring waterproof joining at required faces.

f) ESU shall be tightened with stainless steel nuts an lock washers in position. Tightened nuts shall be locked with lock washers.

g) Special sealant shall be poured inside the plug holes.

h) The elastomeric plugs shall be pressed in position after applying adhesive on the appropriate surface.

i) ESU shall be fitted in position after completion of wearing course. While completing this part of the wearing course, adequate care shall be taken to ensure a waterproof joining with the already existing wearing course.

v) **Pre-setting**

a) The main purpose of pre-setting of the steel inserts at the time of its installation is to ensure as closely as possible the condition that in the long run at the mean average annual temperature, the ESU remains at its nominal state.

The steel insert unit of expansion joint can be fixed in any month of the year. The expansion gap between bridge super structures may vary from time to time; hence the initial fixing distance between fixing points will obviously depend on the month of installation of steel insert. The c/c distance between stainless steel fixing of bolts as indicated in the drawing can be taken as only nominal. The same shall be modified by pre-setting depending on:

The difference between the mean temperature of the month of fixing of steel insert and the annual average temperature, and

The elapsed period between the casting and/or pre-stressing and fixing of steel insert for calculating the remnant creep and shrinkage.

vi) **Special Requirements for Installation**

a) The supplier shall provide detailed working drawings showing the location of all bolts, recesses and holes necessary for the installation of the joint shall be obtained from the supplier before construction of bridge deck area adjacent to the joint. If required detailing of reinforcing bars in superstructure shall be modified to ensure that there will be no interference in the installation of the joint.

b) All bearing surfaces and recesses which are in contact with the joint assembly shall be checked with a straight edge to ensure flatness of profile.

c) No holes shall be drilled for fixing bolts within 7 days of concreting. Holes for the bolts shall be drilled to the size and depth shown on the drawings.

d) Sections of the jointing making the completed joint shall follow a straight line.

e) The fixing bolts shall not be placed in a position until at least 4 weeks after stressing is completed in post-tensioned box or beam and slab structures. Prior to placing sections of jointing, contact surfaces shall be cleaned to remove all grease, tar, paint, oil, mud or any other foreign material that may affect adhesion of the sealant.

f) Sealant shall only be applied to dry contact surfaces. Sufficient quantity shall be applied to the contact surfaces so that sealant is extruded when the jointing is fixed in position.

g) Final sealing of the finished expansion joint shall be completed immediately after installation. All exposed ends, joints between units, other areas of possible leakage, voids between the sides of the jointing and concrete or plates, shall be filled with sealant.

h) Bolt cavities shall be cleaned and plugged with neoprene cavity plugs. Prior to placing the plugs sufficient sealant shall be placed in the cavities to cause extrusion of the sealant by the plugs.

i) All excess sealant shall be removed from the jointing and adjacent areas.

2611 Procedure for installation of various joints, shall also take into account suppliers own specific procedures for installation of each type of joint as the suppliers shall be responsible for performance of the joints for the period of guarantee.

2612 TESTING AND ACCEPTANCE STANDARDS

2612.1 Before installing joints in a bridge, sufficient evidence of the reliability of the proprietary products shall be furnished. A copy of the fatigue and wear test reports, as applicable depending upon the type of joint, carried out by a recognized laboratory/university/ institute on the joint components as a part of product development test, shall be furnished once for the entire lot of supply. The tests covered in Clauses 2612.1. (i) to 2612.1. (vi) need not be carried out on the materials of the joints of supply lot but shall be carried out from time to time by the original manufacturer as per their product development and quality plan for the

same type of joints to ensure the performance requirement of the particular joint component against fatigue and/or wear.

i) For single strip seal and modular strip seal joints, the manufacturer shall produce complete report of the test of anchorage system from a recognized laboratory to determine optimum configuration of anchorage assembly under dynamic loading in support of the efficacy of the anchorage system adopted for the entire lot of joints.

ii) For modular strip seal joints the manufacturer shall produce a test report from a recognized laboratory that the sliding bearings (suspension system) have been fatigue tested for six million load cycles with a frequency of 5 Hz and the loads of 80 kN, 120 kN and 160 kN.

iii) For modular strip seal joints the manufacturer shall produce a test report from a recognized laboratory that the wearing of sliding interface of bearings of modular joints has been tested for a total sliding distance of 5000 m at a load of 48 kN.

iv) For modular strip seal joints the manufacturer shall also produce a test report from a recognized laboratory that the sliding material of sliding springs of expansion joints has been tested for a total sliding distance of 20,000 m with a load equivalent to a stress of 30 MPa.

v) For modular strip seal joints the manufacturer shall also produce a test report from a recognised laboratory that the butt-welded splicing of centre beams has been tested with two million load cycles with a load equivalent to a stress of 165 MPa.

vi) In case of reinforced elastomeric joints abrasion resistance test shall be carried out in accordance with IS:3400 (Part 3) or DIN 53516.

2612.2 Pre-installation Criteria

The pre-installation criteria shall include the routine tests and acceptance tests as described below:

2612.2.1 Routine Tests

Routine tests including tests for materials conforming to specifications shall be carried out by the original manufacturer i.e., in case of imported joints, by the foreign manufacturer as part of their quality control procedure for all joints to be supplied by them. Detailed documentation of all the tests and inspection data as per complete quality control procedure shall be supplied by the original manufacturer in the form of Quality Control Report. Routine tests shall include:

Raw materials inspection,

Process inspection, and

Complete dimensional check as per approved drawings.

i) **Raw Material Inspection :** Test on all raw materials used for the manufacturing of joints as per relevant material standard based on these Specifications shall be carried out by the manufacturer.

a) **Confirmation of the Grade of Steel :** Grade of the steel for the edge beam shall be confirmed by conducting tests for yield stress, tensile strength and elongation. Corresponding to RST 37-2 or 37-3 or 52-3 (DIN), S235 JRG2 or S355K2G3 of EN10025 (DIN 17100), ASTM A36 or A 588, CAN/CSA standard G 40.21 grade 300 W or equivalent to Grade B of IS: 2062. The manufacturers/ suppliers shall have in-house testing facilities for conducting these tests.

b) Tests for steel for the anchorage shall conform to IS:2062.

c) The tests as indicated in Table 2600-1 shall be made for checking the following properties of the chloroprene seal: (a) hardness, (b) tensile strength, (c) elongation at fracture, (d) tear propagation strength, (e) residual compressive strain, (f) change in hardness, (g) change in tensile strength, (h) change in elongation at fracture, (i) ageing in ozone, and (j) swelling behaviour in oil. The manufacturers/suppliers shall have in-house testing facilities for conducting these tests.

ii) **Process Inspection :** Process inspection including inspection of all manufacturing processes adopted to manufacture the joints e.g., welding, corrosion protection, clamping, pre-setting, greasing, bonding by adhesives and riveting, as appropriate, shall be carried out by the manufacturer.

iii) **Complete Dimensional Check :** Complete dimensional check of all components of joint as well as the assembled joint with respect to the approved drawings and tolerances as per these Specifications, shall be carried out by the manufacturer.

2612.3 Acceptance Tests

2612.3.1 In addition to the tests specified under Clause 2612.1, the manufacturer as well as the local supplier in case of imported joints shall have complete in-house testing facilities for the following tests. The Engineer shall insist upon these tests before acceptance of the joint.

i) **Cyclic Motion :** Cyclic motion test may be carried out once on one complete joint assembly or one meter sample piece selected at

random from the entire lot of supply for each type of joint irrespective of movement capacity. The test sample shall be subjected to 5000 expansion and contraction cycles at minimum 30 cycles per hour. The test movement shall be 10 percent more than the design expansion/ contraction movement. Any sign of distress or permanent set of any component or the assembly due to fatigue, will lead to rejection of entire lot of supply.

ii) **Ponding :** Prior to acceptance, 25 percent of the completed and installed joints, subject to a minimum of one joint, shall be subjected to water tightness test. Water shall be continuously ponded along the entire length for a minimum period of 4 hours for a depth of 25 mm above the highest point of deck. The width of ponding shall be at least 50 mm beyond the anchorage block of the joint on either side. The depth of water shall not fall below 25 mm anytime during the test. A close inspection of the underside of the joint shall not reveal any leakage.

iii) **Debris Expelling Test :** Debris expelling test shall be carried out on one metre sample piece selected at random from the entire lot of supply. The fully open gap shall be filled flush with granular debris and cycled 25 times for full opening and closing. The mass of debris repelled after 25 cycles shall be expressed as the percentage of initial mass. The percentage expelled shall not be less than 75.

iv) **Pull-out Test :** Pull-out test shall be carried out on one meter sample piece selected at random from the entire lot of supply. The joint shall then be stretched until the sealing element slips off from its housing. The minimum stretching of the joint before slip-off shall be least 150 percent of the rated movement capacity of the seal.

v) **Vehicular Braking/Traction Test :** This is the only initial acceptance (in-house) test. This test may be carried out once on one complete joint assembly or one metre sample piece selected at random from the entire lot of supply for each type of Joint irrespective of movement capacity. The test sample shall be installed between two blocks of concrete in its mean position. A truck wheel load of 40 kN shall be drawn across the specimen with an engaged ratchet with wheel locked to stimulate locked brakes and then rolled back. The cycle shall be repeated for 50,000 times with a period of 2 seconds. Continuous water cooling will be necessary to control excessive heat generated during the test.

vi) **Erosion Protection Test :** Adequacy of the treatment for protection of steel sections against corrosion should be checked.

2612.3.2 Applicability of Acceptance Tests on Different Types of Joints

The acceptance tests described in Clause 2612.2.1 shall be applicable as per Table 2600-5 for different types of joints.

Table 2600-5 : Applicability of Acceptance Tests on Different Types of Joints

Performance Evaluation Tests	Asphaltic Plug Joint	Compression Seal Joint	Reinforced Elastomeric Joint	Single Gap Strip/Box Seal Joint	Modular Strip/Box Seal Joint
Cyclic motion	Not Applicable	Applicable	Applicable	Applicable	Applicable
Ponding	Not Applicable	Applicable	Applicable	Applicable	Applicable*
Debris expelling test	Not Applicable	Applicable	Applicable	Applicable	Applicable*
Pull-out test	Not Applicable	Not Applicable	Not Applicable	Applicable	Applicable*
Vehicular braking/traction test	Not Applicable	Not Applicable	Applicable	Applicable	Applicable*

* For modular strip seal expansion joint ponding test, debris expelling test, pull-out test and vehicular braking/tractor test shall be carried out on one metre edge beam samples only, complete with sealing element and anchorage, to be supplied by manufacturer.

Note: For all expansion joints which are proprietary a minimum guarantee of 10 years for their satisfactory performance shall be given by the contractor.

2613 TESTS AND STANDARDS OF ACCEPTANCE

The materials shall be tested in accordance with these Specifications and shall meet the prescribed criteria.

The work shall conform to these Specifications and shall meet the prescribed standards of acceptance.

2614 MEASUREMENTS FOR PAYMENT

The expansion joint shall be measured in running metres.

2615 RATE

In the case of supply and installation contract, the contract unit rate shall include the cost of all material, labour, equipment and other incidental charges for procuring and fixing the joints complete in all respects as per these Specifications. For filler joints, the rate per running metre shall include the cost of sealant for the depth provided in the drawing.

In the case of supply contract, the contract unit rate shall include cost of all components of expansion joint including anchorage system, pre-installation fabrication, transportation of assembled joints, handling and other incidental charges.

In the case of installation only contract, the contract unit rate shall include the cost of all material, labour, equipment and other incidental charges for installation of the joints complete in all respects as per these Specifications.

2700

WEARING COAT AND APPURTENANCES

2701 DESCRIPTION

The work shall include wearing coat and bridge appurtenances such as railing, crash barrier, approach slab, drainage spout and weep holes. The work shall be executed in conformity with details shown on the drawings and these specifications or as approved by the Engineer.

2702 WEARING COAT

2702.1 Bituminous Wearing Coat

Bituminous wearing coat shall comprise of following types:

Type 1: Bituminous Concrete 50 mm thick laid in single layer

Type 2: Bituminous Concrete 40 mm thick overlaid with 25 mm thick mastic asphalt

Type 3: Stone Matrix Asphalt 50 mm thick laid in single layer

Type 4: Mastic Asphalt 50 mm thick laid in single layer

Before laying wearing coat the deck surface shall be thoroughly cleaned and tack coat shall be applied. The construction operations and bituminous mixes and tack coat shall conform to Section 500 of these Specifications.

2702.2 Cement Concrete Wearing Coat

Cement concrete wearing coat shall be laid separately over the bridge deck. The thickness of wearing coat shall be 75 mm. The concrete shall be of minimum M30 grade. Steel reinforcement of 8 mm diameter at 150 mm spacing in both directions shall be provided at the mid depth of the wearing coat. In a length of 1 m near the expansion joint additional reinforcement of 8 mm diameter bars shall be provided in both directions to make the spacing as 75 mm.

Cement concrete and steel reinforcement shall conform to Section 1700 and Section 1600 respectively of these Specifications.

Curing of wearing coat shall start as early as possible.

All carriageway and footpath surfaces shall have non-skid characteristics.

2702.3 The cross slope in the deck shall be kept as 2.5 percent.

2702.4 For the structures with flat deck surface, camber/super elevation in the wearing coat shall be achieved as below:

i) In bituminous wearing coat provide profile making course before laying wearing coat. The profile making course shall be of the same material as of wearing coat. The thickness of wearing coat at any point shall not be less than that given in Clause 2702.1 of these Specifications.

ii) In case of cement concrete wearing coat provide profile corrective course along with wearing coat in single layer.

2702.5 Overlay on the existing wearing coat on bridge decks shall not be permitted. In case the wearing coat is damaged, it shall be repaired or replaced. The dismantling of wearing coat shall be as per Section 2800 of these Specifications.

2703 RAILING AND CRASH BARRIER

2703.1 General

a) Bridge railing/crash barrier includes the portion of the structure erected on and above the kerb.

b) Railing/crash barrier shall not be constructed until the centering false work for the span has been released and the span is self-supporting.

c) For concrete with steel reinforcement, specifications for the items of controlled concrete and reinforcement mentioned under relevant Sections of these Specifications shall be applicable.

d) The railing/crash barrier shall be carefully erected true to line and grade. Posts shall be vertical with a tolerance not exceeding 6 mm in 3 m. The pockets left for posts shall be filled with non-shrink mortar.

e) The type of railing/crash barrier to be constructed shall be as shown on the drawings and shall conform to IRC:5 and IRC:6.

f) Care shall be exercised in assembling expansion joints in the railing/ crash barrier to ensure that they function properly.

g) The railing/crash barrier shall be of such design as to be amenable to quick repairs.

h) The material of metal railing/crash barrier shall be handled and stored with care, so that it remains clean and free from damage. Railing/crash barrier materials shall be stored above the ground on platforms, skids, or other supports and kept free from grease, dirt and other contaminants.

Any material which is lost, stolen or damaged after delivery shall be replaced or repaired by the Contractor. Methods of repairs shall be such that they do not damage the material or protective coating.

2703.2 Metal Railing/Crash Barrier

Materials, fabrication, transportation, erection and painting for bridge railing/crash barrier shall conform to the requirements of Section 1900 of these Specifications.

All steel railing elements, pipe terminal Sections, posts, bolts, nuts, hardware and other steel fittings shall be galvanised or painted with an approved paint.

If galvanised, all elements of the railing/crash barrier shall be free from abrasions, rough or sharp edges, and shall not be kinked, twisted or bent. If straightening is necessary, it shall be done as per method approved by the Engineer.

Damaged galvanised surfaces, edges o' holes and ends of steel railing/crash barrier cut after galvanising shall be cleaned and re-galvanised.

The railing/crash barrier shall be carefully adjusted prior to fixing in place to ensure proper matching at abutting joints and correct alignment and camber throughout its length. Holes for field connections shall be drilled with the railing/crash barrier in place in the structure at proper grade and alignment.

Unless otherwise specified on the drawings, metal railing/crash barrier shall be given one shop coat of paint and three coats of paint after erection, if sections are not galvanised.

Railing/crash barrier shall follow the alignment of the deck. Where required as per the drawings, the rail elements shall be before erection.

2703.3 Cast In-Situ Concrete Railing/Crash Barrier

The portion of the railing/crash barrier or parapet which is to be cast in-situ shall be constructed in accordance with the requirements for Structural Concrete Section and reinforcement conforming to Sections 1600 and 1700 of these Specifications.

Forms shall be fabricated conforming to the shape of railing/crash barrier shown on the drawings. It shall be ensured that no form joint appears on plane surfaces. For bridges/ viaducts of length more than 500 m horizontal slip forms shall be used for casting of crash barriers.

All mouldings, panel work and bevel strips shall be constructed according to the details shown on the drawings. All corners in the finished work shall be true, sharp and clean-cut and shall be free from cracks, spalls or other defects. Castings of posts shall be done in single pour.

2703.4 Precast Concrete Railing/Crash Barrier

Precast members for railing/crash barrier shall be of reinforced cement concrete and shall conform to Sections 1600 and 1700 of these Specifications. The maximum size of the aggregate shall be limited to 12 mm and minimum concrete grade shall be M30 for railings and M40 for crash barriers. The precast members shall be removed from the moulds as soon as practicable and shall be kept damp for a period of at least 10 days, during which they shall be protected from sun and wind. Any precast member that becomes chipped, marred or cracked before or during the process of placing shall be rejected.

2704 APPROACH SLAB

Reinforced concrete approach slab with 12 mm dia bars at 150 mm c/c in each direction both at top and bottom in M30 grade of concrete covering the entire width of the roadway, shall be provided as per details given on the drawings or as approved by the Engineer. Minimum length of approach slab shall be 3.5 m and minimum thickness 300 mm.

The cement concrete and reinforcement shall conform to Sections 1700 and 1600 respectively of these Specifications.

The approach slab shall rest on a base of 150 mm thick M15 grade concrete or as shown on the drawings or as directed by the Engineer.

2705 DRAINAGE SPOUTS

Drainage along longitudinal direction shall be ensured by sufficient number of drainage fixtures embedded in the deck slab. The spouts shall be of not less than 100 mm in diameter and shall be of corrosive resistant material such as galvanised steel with suitable cleanout fixtures. The spacing of drainage spouts shall not exceed 10 m. The discharge from drainage spout shall be kept away from the deck structure by means of suitable down pipes upto 500 mm above High Flood Level. In case of viaducts in urban areas, the drainage spouts should be connected with suitably located runners and down pipes to discharge the surface run-off into drains provided at ground level.

2705.1 Fabrication

The drainage assembly shall be fabricated to the dimensions shown on the drawings. All materials shall be corrosion resistant;. Steel components shall be of mild steel conforming to IS:226. The drainage assembly shall be seam welded for water tightness and then hot-dip galvanised.

2705.2 Placement

The galvanised assembly shall be given two coats of bituminous paint before placement. The whole assembly shall be placed in true position, lines and levels as shown on the drawings with necessary cutouts in the shuttering for deck slab and held in place firmly. Where the reinforcements of the deck are required to be cut, equivalent reinforcements shall be placed at the corners of the cut out.

2705.3 Finishing

After setting of the deck slab concrete, the shrinkage cracks around the assembly shall be sealed with polysulphide sealant or bituminous sealant as per IS:1834 and the excess

sealant trimmed to receive the wearing coat. After the wearing coat is completed, similar sealant shall be provided to cover at least 50 mm on the wearing coat surface all round the drainage assembly.

2706 WEEP HOLES

Weep holes shall be provided on all plain concrete, reinforced concrete, brick masonry and stone masonry structures such as, abutment, wing wall and return walls as shown on the drawings or as directed by the Engineer to permit water to flow out without building up pressure in the back fill. Weep holes shall be provided with 100 mm diameter AC/PVC/HDPE pipe for structures in plain/reinforced concrete or brick masonry. In case of stone masonry, weep holes shall be of rectangular shape 80 mm wide, 150 mm high or circular with 150 mm diameter. Weep holes shall extend through the full width of concrete/masonry with slope of about 1 vertical: 20 horizontal towards the draining face. The spacing of weep holes shall be 1 m in either direction or as shown in the drawings with the lowest at 150 mm above the low water level or ground level whichever is higher or as directed by the Engineer.

2707 TESTS AND STANDARDS OF ACCEPTANCE

The material shall be tested in accordance with these Specifications and shall meet the prescribed criteria and requirements.

The work shall conform to these Specifications and shall meet the prescribed standards of acceptance.

2708 MEASUREMENTS FOR PAYMENT

The measurement for payment for wearing coat, railing/crash barrier, approach slab, drainage spout and weep holes shall be made as under:

i) Bituminous and cement concrete wearing coat shall be measured in cubic metres. Steel reinforcement in wearing coat shall be measured in tonnes.

ii) Railing and metal beam crash barriers shall be measured in running metres.

iii) For concrete crash barriers concrete shall be measured in cubic metres and steel shall be measured in tonnes.

iv) Approach slab and its base shall be measured separately in cubic metres.

v) Drainage spouts shall be measured in numbers.

vi) Weep holes in concrete/brick masonry structure shall be measured in numbers. For structures in stone masonry, weep holes shall be deemed to be included in the item of stone masonry work and shall not be measured separately.

2709 RATE

The contract unit rate for wearing coat shall include the cost of all labour, material, tools and plant and other costs necessary for completion of the work as per these specifications.

The contract unit rate of railing and crash barrier shall include the cost of all labour, material, formwork, tools and plant required for completing the work as per these Specifications.

The contract unit rate for approach slab shall include the cost of all labour, material, tools and plant required for completing the work as per these Specifications. The rate for base shall include cost of all labour, material, tools and plant required, including preparation of surface and consolidation complete in all respects.

The contract unit rate for drainage spout shall include the cost of all labour, material, tools and plant required for completing the work as per these Specifications. It shall also include the cost of providing runners and down pipes with all fixtures upto 500 mm above high flood level or up to the drains at ground, as applicable or as shown on the drawings.

The contract unit rate for weep holes shall include the cost of all labour, material, tools and plant required for completing the work as per these Specifications.

2800

REPAIR OF STRUCTURES

2801 DESCRIPTION

Repair of structures shall be carried out in accordance with the repair plans and these Specifications or as directed by the Engineer. Where repair work is not covered by these Specifications, special specification may be framed.

Implementation of repair schemes shall also conform to provisions of IRC:SP:40, IRC:SP:74 and IRC:SP:80.

2802 GENERAL

2802.1 Environmental Aspect

Care shall be taken to ensure suitable mitigation measures against noise and dust, pollution and damages to the environs whether temporary or permanent.

2802.2 Phasing

The sequence of work shall be in accordance with the drawings or as directed by the Engineer.

2802.3 Traffic Management

Traffic management, signage, signaling, barricading, and lighting arrangement shall be in accordance with Section 100 of these Specifications.

2802.4 Safety Precautions

Adequate precautions shall be taken for safety of personnel, road users and existing services.

2802.5 Dismantling and Removal of Material

Dismantling of any bridge component and removal of materials shall conform to Section 200 of these Specifications and as shown on the drawings or as directed by the Engineer.

2803 SEALING OF CRACKS BY INJECTION OF EPOXY RESIN

2803.1 General

The work of structural bonding of concrete using epoxy adhesive shall conform to these Specifications.

2803.2 The Contractor shall furnish a method statement giving details of methodology of construction, sources of supply of materials, tools, equipment, and appliances to be used on work, personnel and supervision.

2803.3 Personnel

The Contractor's personnel shall be qualified and experienced in epoxy injection process.

2803.4 Material

The material for injection shall be suitable two-component low viscosity epoxy resin, having the required characteristics of bonding with concrete and resistance to moisture penetration. Epoxy mortar or polysulphide resin may be used for sealing the surface.

The material for epoxy injection shall conform to the following:

i) The resin and hardener shall be mixed by weight and the mixing ratio shall generally be between 1 pbw (parts by weight) to 50 pbw subject to manufacturer's recommendation.

ii) Neither the mixed epoxy adhesives nor their individual component shall contain solvents and thickeners.

iii) The components shall be free of lumps or foreign material. The viscosity of the individual components shall not change more than ±15 percent kept in closed containers at 25°C after two weeks.

iv) Consistency of mixed adhesive shall satisfy the requirements given in Table 2800 -1.

Table 2800-1: Consistency of Adhesive

		Standard Version (cps)	Low Viscosity Version (cps)
i)	Viscosity of Mixed Adhesive at 25°C	(200-300)	(100-190)
ii)	Pot Life of mixed adhesive at 25°C	1 hour ± 15 minutes *	
iii)	Set time of mixed adhesive at 25°C	3 - 6 hours	

* In the case of two component injection system where resin and hardener get mixed at point of injection pot life at 25°C shall be not greater than 15 minutes ± 10 minutes.

2803.5 Equipment for Injection

The equipment shall be portable positive displacement type pumps with interlock to provide positive ratio control of exact proportions of the two components at nozzle. The pumps shall be generally electrically powered and shall provide in-time metering and mixing. The tolerance

on mix ratio shall be 5 percent by volume. The injection equipment shall have automatic pressure control capable of discharging mixed adhesive at any pre-set pressure within the prescribed limits and shall be additionally equipped with a manual pressure control.

The injection equipment shall be equipped with sensors on both the components A and B reservoirs that will automatically stop the machine when only one component is being pumped to the mixing head.

If considered appropriate, suitable compressed air operated epoxy injection gun can be used with prior approval of the Engineer for manual injection of mix when resin and hardener had been mixed in a separate unit.

2803.6 Preparation

Surfaces adjacent to cracks or other areas of application shall be cleaned of dirt, dust, grease, oil efflorescence or other foreign matter by brushing/water jetting/sand blasting. Acids and corrosives shall not be permitted for cleaning.

Entry ports shall be provided along the crack at intervals of not more than the thickness of concrete at the location.

Surface seal shall be applied to the face of the crack between the entry ports. For through cracks, surface seal shall be applied to both faces.

Before proceeding with the injection, it shall be ensured that the surface seal has gained adequate strength corresponding to concrete strength of the member and to withstand the injection pressure.

2803.7 Epoxy Injection

Injection of epoxy adhesive shall begin at the lowest entry port and continue until the epoxy adhesive appears at the next adjacent entry port. The injection shall then be discontinued at the first entry port which shall be sealed. Thereafter, epoxy injection shall be carried out from the next adjacent port and continued successively from each port until the crack is completely filled.

If travel of epoxy adhesive from one port to the next does not occur, the work shall be stopped immediately. In case the volume of the injected material exceeds 2 litres for a particular entry port, the work shall be stopped and the specifications may be reviewed.

2803.8 Precautions for Application

a) Temperature of components A and B, i.e., resin and hardener shall be between 10°C and 35°C at the time of mixing unless otherwise specified.

b) Temperature of structural member during epoxy injection shall be between 10°C and 35°C unless otherwise specified.

c) Immediately prior to use, each component shall be thoroughly mixed with a clean paddle. The paddle shall be of a type that does not propel air into the material. Separate clean paddle must be used for each component.

d) Any heating of the adhesive components shall be done by application of indirect heat, in case the work is to be done in cold climate.

e) Just before use, the two components shall be thoroughly mixed in the ratios specified by the manufacturer. The mixing time shall be strictly in accordance with manufacturer's recommendations. When adhesives with different coloured components are mixed, the mixture shall have a uniform colour without streaks.

f) The use of solvents and thinners shall not be permitted except for cleaning of equipment.

2803.9 Testing

2803.9.1 Material Testing

Prior to approval of material, the following tests shall be carried out by the Contractor at site or in an authorised laboratory for each batch of resin and hardener and each combination.

i) Viscosity test for resin and hardener and the mix: three specimens each.

ii) Pot life test: three specimens each.

iii) Bond test: three specimens each.

iv) Shear test: six specimens each, 3 after 24 hours and the other three after 72 hours of curing.

Subsequent tests shall be carried out as directed by the Engineer. Procedure for tests shall be as below:

i) **Pot Life Test**

a) 500 gm of resin formulation shall be prepared by thoroughly mixing the resin and hardener / accelerator / catalyst component in proposed proportion in a 1 kg capacity hemispheric

porcelain bowl by means of a spatula or any other agitating device and time and the ambient temperature noted.

b) The resin formulation shall be applied with a clean dry 25 mm size painter's brush, on a clean dry surface such as cement concrete over 150 mm - 200 mm length, starting immediately after mixing the formulation and repeating the operation every five minutes. When it becomes just difficult to spread the resin properly with the brush, the time is noted. The time elapsed since completion of mixing of resin formulation, is taken as its pot life.

c) One pot life test shall be performed on commencement of work and the same shall be repeated every four hours.

d) In case the material fails to satisfy the pot life test, it shall not be used for injection.

Where the resin and hardener get mixed at point of injection, the pot life is not important and no tests may be required.

ii) **Bond Test**

A standard 150 mm diameter and 300 mm long concrete cylinder shall be cast in 2 pieces by providing a separating medium at an axis of 45 degrees to the longer axis of the cylinder as shown in Fig. 1 of Appendix 2800/1.

Three such split cylinders shall be prepared. Two pieces of each cylinder shall be joined with epoxy mortar at four points to give a clear gap of about 0.2 mm, which will be injected with epoxy resin at site. After epoxy has been cured, load test shall be carried out on the cylinder. The failure shall not take place at the joint injected with epoxy resin. Also the strength of cylinder at failure shall not be less than 80 percent of the 28 days cube strength of the concrete mix.

iii) **Shear Tests**

Two steel plates, minimum 3 mm thick, shall be bonded with epoxy at site using the same resin mix as used/proposed to be used for injection. The assembly shall be kept in mechanical clamp till epoxy is cured. A total of six specimens shall be prepared for each batch of materials. Three test specimens shall then be subjected to a shear force along the axis after 24 hours and the minimum shear strength before failure shall not be less than 1 MPa (Refer Fig. 2 of Appendix 2800/1).

The remaining test specimens shall be similarly tested after 72 hours of curing. The shear strength before failure shall not be less than 2.5 MPa.

2803.9.2 Core Test

If directed by the Engineer, cores shall be tested for the acceptance of the work. The selection of the location of cores shall be as directed by the Engineer in such a way that damage in critical/stressed areas of the structure is avoided.

The Contractor shall obtain 50 mm diameter initial core samples in the first 50 linear metres. Thereafter, frequency of core sampling shall be as specified or as agreed by the Engineer. The depth of the core shall normally be less than 200 mm.

Tests and Acceptance Criteria shall be as follows:

a) Penetration- Visual examination of the core should show epoxy adhesive filling a minimum of 90 percent of the crack.

b) Bond Strength- When tested for bond, concrete failure should occur before adhesive failure. Also, minimum bond strength of 40 MPa should be developed with no failure of either concrete or adhesive.

If the cores taken in first 50 m length pass tests as specified above, epoxy adhesive injection work at area represented by cores will be accepted.

If cores fail either by lack of penetration or bond strength, work shall not proceed further until the areas represented by the cores are re-injected and re-tested for acceptance.

Filling of Core Holes

Two-component bonding agent shall be applied to surfaces of cored holes followed by filling of non-shrink cement grout mix placed by hand trowel, thoroughly rodded and tamped in place. The surface shall be finished to match the finish and texture of existing concrete to the satisfaction of the Engineer. Materials to be used and procedures for filling core holes shall be got approved by the Engineer before proceeding with work.

2803.9.3 Test for Injection Equipment

At all times during the course of the work, the Contractor shall keep complete and accurate records and make available to the Engineer, the results of the pressure and ratio tests specified below so that the efficacy and accuracy of the injection equipment is verified.

The Engineer at any time may direct the Contractor to conduct additional tests in his presence.

a) **Pressure Test**

The mixing head of the injection equipment shall be disconnected and the two adhesive component delivery lines shall be attached to

the pressure check device, which shall consist of two independent valved nozzles capable of sensing the pressure. The check device shall be closed and equipment operated until the gauge pressure in each line reads 5 MPa. The pumps shall be stopped and the gauge pressure shall not drop below 4 MPa within 2 minutes.

The pressure test shall be run for each injection unit at the beginning and after break of every shift.

b) **Ratio Test**

The mixing head of the injection equipment shall be disconnected and the two adhesive components shall be pumped simultaneously through the ratio check device, which shall consist of two independent valved nozzles. There shall be a pressure gauge capable of controlling back pressure by opening or closing valved nozzles capable of sensing the back pressure behind each valve.The discharge pressure shall be adjusted to read 5 bar for both adhesive components, which shall be simultaneously discharged into separate calibrated containers during the same time period. The amounts thus discharged shall be compared to determine whether the volume/discharge conforms to the manufacturer's recommended ratio for applicable material.

2804 REPLACEMENT OF SPALLED CONCRETE BY EPOXY MORTAR/ POLYMER MORTAR

2804.1 Epoxy Mortar

2804.1.1 Material

The epoxy resins for use in the mortar shall be obtained from a reputed manufacturer and shall conform to the following:

Pot Life	60 minutes at 30°C
Bond Strength	12 MPa
Tensile Strength	16 MPa

The Contractor/user shall carry out tests on the samples to demonstrate that the above requirements are met.

The sand to be used in the mortar shall be graded quartz sand.

2804.1.2 Proportioning and Mixing

The resin and hardener shall be first mixed. Thereafter, dry filler shall be added and again mixed thoroughly. The resultant mix shall be free of lumps of dry filler and shall be of uniform

colour. For a total weight of 1kg or less, the components shall be mixed for 3 minutes in a slow speed (400-600 rpm) mixer. The stirrer shall be moved up and down and along the sides until uniform colour without streaks, is obtained. While stirring, it shall be ensured that excessive amount of air is not entrapped. If no power is available, a flat putty knife may be used to reach into the corners of the can and hand mixing done for at least 5 minutes.

2804.1.3 Surface Preparation

Two general methods of surface preparation shall be followed:

a) Mechanical that includes grinding, grit blasting, water blasting and scarification.

b) Chemical that includes acid etching with 15 percent by weight of hydrochloric solution, followed by repeated flushing with high pressure stream of water

Contaminants, such as oil, grease, tar, asphalt, paint, wax, curing compounds, surface; impregnants like linseed oil or silicons and laitance, loose material and unsound concrete, shall be removed from the surface on which epoxy mortar is to be placed.

2804.1.4 Application

The epoxy primer coat which acts as a bonding agent, shall consist of resin and hardener mixed in the proportions as given by the manufacturer. Epoxy bonding agent shall be applied only on a dry surface and shall not be applied when it rains or in standing water. The overlay, whether epoxy or cement based, shall be done within the pot life of the epoxy primer coat. Epoxy primer coat shall be applied with the help of stiff nylon bristle brushes or hard rubber rollers or spray gun, depending upon the nature of surface and extent of work area. As far as possible, the coating shall be uniformly thick.

Before the primer coat is fully cured, epoxy mortar shall be applied by means of trowels and floats. The interval between the application of primer coat and epoxy mortar shall be approximately 15/30 minutes depending upon the ambient temperature.

Seal coat shall be applied 24 hours after curing and mild roughening of the surface of the mortar.

2804.1.5 Coverage

The coverage of resin mix would depend on the system of resin used. However, as a general guideline the coverage area shall be as under:

a) Primer Coat. An area of 3-6 square metres will be covered by 1 kg of resin hardener mix, depending on the finish of the concrete.

b) Epoxy Mortar. One square metre of surface requires approximately 20-24 kg of epoxy mortar, when laid to a thickness of 10 mm.

c) Seal Coat. An area of 4 to 6 square metres will be covered by 1 kg depending on the temperature of application.

2804.1.6 Cleaning and Maintenance of Equipment

Tools and equipment are best cleaned immediately after use since the removal of cured resin is difficult and time consuming. The bulk of resin shall be removed using a scraper and remainder washed away completely using solvents such as toluene, xylene or acetone. Equipment shall always be cleaned before the epoxy hardens. Solvents used for this purpose may be Acetone (flammable), Methyl Ethyl Kethone (flammable), Methyl Chloride (non-flammable). Cured epoxies may be removed using Methylene Chloride

2804.1.7 Testing

Epoxy used for making mortar shall conform to all requirements and testing procedures as laid down in Clause 2803.9.

2804.1.8 Personnel and Environment Safety

Any skin contact with epoxy materials, solvents and epoxy strippers should be avoided. Epoxy resins and particularly epoxy hardeners (B component) may cause a rash on the skin. The official toxicity classification on the container labels may be looked at before starting work.

Rubber gloves, with a cloth liner, and protective clothing shall be worn. Barrier creams are recommended but are not substitutes for protective clothing. Eyes shall be protected where splashing could occur while spraying or mixing. Good ventilation shall be ensured and inhalation of vapours avoided. If materials are sprayed, a respirator shall be used.

If contact occurs with the skin, it shall be immediately washed with a cleaner, followed by soap and water. Should eye contact occur, it shall be flushed immediately with plenty of water for 15 minutes and a doctor called for.

If contact occurs with the clothing, it shall be immediately changed to prevent further skin contact, and if the contact occurs with components A or B, the clothing shall be thrown away. Hardened epoxy is not harmful but will break the clothing.

All emptied, used buckets, rags and containers shall be removed from site. These shall be stored in waste disposal bags and suitably disposed of.

2804.2 Polymer Mortar

2804.2.1 Material

The latex acrylic polymer for use in the polymer modified cementitious mortar (PMC) shall be obtained from a reputed manufacturer and shall conform to the following:

Pot Life	60 minutes at 30°C
Compressive strength at 28 days	18.20 N/mm^2
Flexural strength at 28 days	3.0 N/mm^2 to 5.0 N/mm^2
Addition to concrete (slant shear)	3.0 N/mm^2 to 5.0 N/mm^2

The sand to be used in the mortar shall be graded quartz sand and the sand content shall be in accordance with the desired consistency.

2804.2.2 Proportioning and Mixing

A dry mortar of quartz sand and cement (OPC) shall be prepared as per the proportions recommended by the manufacturer. The quantity of polymer shall be measured by measuring jars and shall be added to dry mortar. It shall be mixed with trowel or by hand so that no lumps remain in the mixed mortar.

2804.2.3 Surface Preparation

Same as in Clause 2804.1.3.

2804.2.4 Application

The polymer bond coat shall consist of a mix of polymer and cement as per recommendations of manufacturer and shall be applied in the same manner as indicated in Clause 2804.1.4 for epoxy primer coat.

The cement and sand shall be dry mixed and then mixed with liquid polymer, adding the required amount of water in prescribed proportions as per manufacturer's recommendation. The mortar shall be mixed till it attains a smooth consistency. The mix shall be applied over the polymer bond coat by hand and finished by trowel.

2804.2.5 Coverage

a) An area of 3 to 4 square metres will be covered by 1 litre of polymer bond coat, depending on substrata conditions.

b) An area of 1 square metre of surface will be covered by approximately 21-22 kg of polymer mortar when laid to a thickness of 10 mm.

2804.2.6 Testing

The polymer used in making polymer mortar, shall be tested for all requirements as indicated by the manufacturer and to satisfy requirements given in Clause 2804.2.1.

2805 EPOXY BONDING OF NEW CONCRETE TO OLD CONCRETE

2805.1 Epoxy resin used for bonding shall be obtained from a reputed manufacturer. The pot life of such bonding epoxy shall not be less than 60 minutes at normal temperature.

2805.2 The entire surface of the existing concrete member should be thoroughly cleaned by wire brush and then with compressed air to remove dust and loose particles from the surface. Any crack or spalling of concrete shall be sealed by epoxy injection/epoxy mortar/grouting as decided by the Engineer. A coating of suitable epoxy resin at the rate of 0.8 kg/sq.m (minimum) should then be applied on the surface of the existing concrete members. Fresh concrete shall then be placed within the pot life of the resin system.

2805.3 Testing

2805.3.1 Epoxy used for bonding work shall satisfy the criteria mentioned in **Clause 2803.9.**

2805.3.2 Two concrete cubes of 150 mm size cast as per approved design mix shall be placed at a distance of 150 mm from each other, as shown in Fig. 3 of Appendix-2800/1. Epoxy resin system suggested for bonding new to old concrete shall be applied on the opposite faces of the cubes.

Fresh cement concrete cube of grade as per approved design mix shall be cast with water cement ratio of 0.4 or less in the manner shown in Fig. 3 of Appendix 2800/1. The assembly shall be cured in water for 28 days and steel spacer removed thereafter.

The cube assembly shall be subjected to compression load after 28 days of curing, thereby subjecting the bond to shearing load. Failure must not occur at this joint.

2806 CEMENT GROUTING

2806.1 Material

Grouting shall normally be performed with a mixture of neat Portland cement and water. Other additives and admixtures may be added to improve the impermeability and strength, with the approval of the Engineer. The size of the particles and the consistency of the grout must be suited to the passageways it must follow. Neat grout will not flow freely into holes smaller

than about three times the largest cement particle. Except in large cavities where thick mortar can be placed, the sand should all pass the 28-mesh sieve and have a large portion passing the 50-mesh and 100-mesh sieves. The proportions of Ordinary Portland cement to sand will depend upon the size of the spaces to be filled and will vary from a neat grout to about 1:1 mix. The amount of water to be added depends upon the consistency required. Grouts with as little as 16 litres of water per bag of cement could be used and it should seldom be necessary to use more than 35 to 40 litres of water per bag of cement.

Where necessary and approved by the Engineer, additives and admixtures may be added to Portland cement grout mixtures for improving impermeability and strength, delaying the setting time, increasing flowability and minimizing segregation and shrinkage.

2806.2 Preparation

The surface shall be cleaned with wire brush and compressed air. Thereafter holes of 15 mm dia and 150 mm to 200 mm deep may be drilled along the length of the cracks at a spacing of 500 mm by wet drilling using rotary percussion drills and nipples shall be inserted in these holes.

2806.3 Proportioning, Mixing and Equipment for Grouting

The cement grout shall be mechanically mixed using a system of power-driven paddles of high speed centrifugal pump. The grout pump to be used shall permit close control of pressures to allow a flexible rate of injection with minimum clogging of valves and ports. The most satisfactory equipment for injecting grout is a pump of the double-acting flexible reciprocating type giving a steady flow. The grout pump shall be so placed as to reduce the waste in cleaning lines. It is preferable to put 50 percent or more of the mixing water into the mixer before adding the dry ingredients and then the remaining water. A continuous supply of grout is preferable to an intermittent one. Consistency of the grout may be determined by trials starting with thin grout i.e. about 40 litres of water per bag of cement and progressively decreasing the water content to about 15 litres per bag of cement.

Where the mixer and pump are combined in one unit, the dry material shall be screened before mixing. If the mixer and pump are in separate units, the grout shall pass through a screen before it enters the pump.

2806.4 Application

Highest practical pressure within the limits of 100 kPa - 400 kPa should be used in order to force the surplus water from the grout. As the pressure may be distributed hydraulically over considerable areas, vigilance must be exercised to prevent damage or needless waste of grout. Adequate precaution shall be taken to ensure that leakage of grout does not occur.

Pressure shall be steady to ensure a continuous flow of grout. Grouting shall not be continued till the hole consumes mix at the rate of not less than 30 litres in 20 minutes or until refusal at the grouting pressure of 400 kPa at any hole. Should the grout escape from an adjacent nipple, it should be plugged or capped. Any seam, crack or joint through which grout escapes shall be caulked with epoxy mortar as soon as thick grout appears.

2806.5 Cleaning of Equipment

After completion of each grouting operation or temporary shutdown, it is advisable to force clear water through the pump until the discharge line shows no colour, after which the pump covers shall be removed and the valve chambers thoroughly cleaned.

2806.6 Testing

Percolation test done at the end of grouting operation shall give a value of less than 2 lugions. For specialised treatment like polymer modified cementitious grout injection, manufacturer's literature and specification shall be followed.

2807 GUNITING/SHOTCRETING

2807.1 The gunite shall comprise 100 parts by weight of cement, 300 parts by weight quartz sand, 35-50 parts by weight water and 2 parts by weight approved quick setting compound. In general, dry mix shotcrete shall be used.

2807.2 Ordinary Portland cement conforming to IS:269 shall be used in guniting.

2807.3 Sand for guniting shall comply with the requirements stipulated in IS: 383. In general, sand should neither be too coarse to increase the rebound nor too fine to increase the slump. Sand should preferably have moisture content between 3 to 6 percent.

The grading of sand shall lie within the limits given below:

IS Sieve Designation	Percent Passing the Sieve
4.75 mm	95–100
2.36 mm	65–90
1.18 mm	45–75
600 micron	30–50
300 micron	10–22
150 micron	2–8

2807.4 For thick sections it may be advantageous to incorporate coarse aggregate in the mix provided adequate guniting equipment is available. Coarse aggregate, when used,

shall conform to grading given in Table-1 of IS:9012. The percentage of coarse aggregate may normally be kept as 20 to 40 percent of the total aggregate and the mix shall be suitably designed.

2807.5 Water/cement ratio for guniting shall fall within the range of 0.35 to 0.50 by mass; wet enough to reduce the rebound. Drying shrinkage may be between 0.06 percent and 0.10 percent. The quick setting compound shall be added at the nozzle with water just before guniting.

2807.6 Workmanship

The cement and sand shall be batched and mixed and conveyed through a hose pipe with the help of compressed air. A separate line shall bring the water under pressure. The cement, sand and water mix shall be passed through and intimately mixed in a special manifold and then projected at high velocity to the surface being repaired. The density of gunite shall not be less than 2000 kg/cu.m. The strength of gunite shall not be less than 25 MPa. For effective guniting, the nozzle shall be kept 600 mm to 1500 mm away from the surface, preferably normal to that surface. While enclosing reinforcement bars during repairs the nozzle shall be held closer at a slight angle and the mix shall be wetter than the normal.

2807.7 Test panels simulating actual field conditions shall be fabricated for conducting preconstruction testing. The procedure for testing the cubes or cylinders taken from the panels stipulated in Clause 6 of IS:9012 shall be followed.

2807.8 It should be ensured from tests that strength of about 25 MPa at 28 days is available for the mortar/concrete mix.

2807.9 The defective concrete shall be cut out to the full depth till sound concrete surface is reached. Under no circumstances should the thickness of concrete to be removed be less than clear cover to the main reinforcement. No square shoulders shall be left at the perimeter of the cut-off portion and all edges shall be tapered. Thereafter, all loose and foreign materials should be removed and the surface sand blasted to make it rough to receive shotcrete after applying a coat of epoxy bonding as per recommendation of the manufacturer at the rate of 1.0 kg per 1.5 sq.m. of surface area.

2807.10 The exposed reinforcement shall be thoroughly cleaned free of rust, scales etc. by wire brushing. Wherever the reinforcements have been corroded, the same shall be removed and replaced by additional reinforcement. Before application of gunite, a coat of neat cement slurry should be applied on the surface of the reinforcement.

2807.11 Sufficient clearance shall be provided around the reinforcement to permit encasement with sound gunite. Care shall be taken to avoid sand pockets behind the reinforcement.

2807.12 A thickness of 25 mm to 40 mm of gunite can normally be deposited in one operation. If, for some reason, the total thickness is to be built up in successive operations, the previous layer should be allowed to set but not become hard before the application of the subsequent layer. Guniting shall always be done on a damp concrete surface.

2807.13 Where required, welded wire fabrics 50 mm x 50 mm x No. 10 gauge shall be provided in the first layer of guniting. The fabric shall be tied properly. In case the damage to the concrete member is very deep, the specifications for guniting as well as requirement of placement of wire mesh, has to be decided as per field conditions.

2807.14 The stipulations given in IS:9012 regarding application of gunite should be followed so as to keep the rebound to the minimum. The quality of guniting and workmanship shall be such that the percentage of rebound mentioned in IS:9012 can be adhered to. In no circumstances shall the rebound material be re-used in the work.

2807.15 It would be desirable that green gunite is moistened for at least 7 days. Guniting work shall not be done during windy or rainy conditions.

2808 PROTECTIVE SURFACE COATING OF CONCRETE BY ACRYLIC ELASTOMERIC COATING

2808.1 The acrylic elastomeric coating shall be water based (solvent free), modified with selected mineral fillers applied over the prepared surface. The coating should have anti-carbonation and water vapor diffusion property and should be resistant to action of ultra violet (UV) radiation. It should be waterproof and capable of bridging crazings and cracks. The shelf life for such coatings shall not be more than 6 months.

2808.2 It is necessary that the system should be capable of protecting the surfaces of pre-stressed and reinforced concrete members from all deleterious elements such as chlorides and sulphates. The protective treatment should allow excess water vapour in the concrete to evaporate out (breathing) without rupturing itself due to vapour pressure. The protective system itself should not deteriorate from exposure to UV rays and weathering.

The acrylic elastomeric coating system shall satisfy the requirements given in Table 2800-2.

Table 2800-2: Properties of Acrylic Elastomeric Coating

Sl.No.	Parameter	Requirement	Reference
1)	Specific Gravity	1.4±0.05	IS:345
2)	Solid contents	70±3%	IS:345
3)	UV resistance	No colour change	ASTM-G-53/DIN-EN-150-105

Sl.No.	Parameter	Requirement	Reference
4)	IR-Spectrum	As per Acrylic Polymer	IR-Spectrometer standards
5)	Adhesion with concrete	1.5 N/m^2	ASTM-D-4541-02/ DIN500014
6)	Dry film thickness	200-225 Microns (for minimum 2 coats)	
7)	Coverage	400-450 gm /m^2 (2 Coats)	
8)	Physical properties Diffusion resistance against carbon dioxide	Equivalent air layer thickness S_DCO_2 shall be >50 m	DIN 53122 Part –I
9)	Diffusion resistance against water vapour	Equivalent air thickness S_DH_20 <4 m	DIN 52615
10)	Water proofing characteristics	Percentage reduction in flux should be>50%	
11)	Re-coatability	Min. 2h to 72 h or as per manufactures specification with the approval of the Engineer in charge.	

The primer shall satisfy the following requirements

i) System : Single component universal polymer primer
ii) Base : Acrylic Resin dispersion
iii) Curing : Air Curing
iv) Colour : Milk white, transparent application
v) Shelf life : 6 months from date of manufacturing in tightly sealed container.
vi) Coverage : 75 gm/m^2 to 100 gm/m^2 (depending upon smoothness and absorption of concrete surface)

2808.3 Quality Assurance

The Acrylic elastomeric material should be tested in GOI accredited laboratories where such laboratories are available, otherwise in other standard laboratories where similar facilities exist for properties specified above. Random samples during execution shall be taken from consignments brought to site to verify that the test results match with the earlier certificates produced before approval of the product. Both the test results (prior to approval and during execution), shall conform to the requirements as per Table 2800-1, failing which the consignment shall be rejected. It shall be made mandatory that the stock register for the materials are maintained at site and signed by the Engineer periodically.

2808.4 Surface Preparation

The work shall commence after carrying out any repair to the concrete surface as directed by the Engineer. The concrete surface shall be free from all adhesion inhibiting substances such as oil, grease release agents as well as laitance and dust. The surface shall be cleaned by wire brushing, mechanical scraping and any loose material shall be removed by chiseling with small hammer and washed with clean water. The substrata shall be structurally sound for effective bond of the acrylic polymer with the concrete surface. All pin holes shall be filled with non-shrink polymer modified fine repair mortar.

2808.5 Application

After preparing the surface and filling the pin holes, primer coat (75-100 gm/sq.m.) shall be applied with brush/lambskin roller/spray gun and shall be cured for 60 minutes or as specified by the manufacturer.

Subsequently, 1st and 2nd coats of polymer coating shall be applied with brush/spray gun/ roller keeping the time between coats not less than 2 h and not more than 72 h. Consumption per coat shall be 200-225 gm/m^2. The total dry film thickness of the protective coating for all coats shall be in the range of 200-225 microns. The wet film thickness shall be measured at a number of selected locations at the time of application with painting gauges. For measuring the dry film thickness, suitably located painting gauge shall be used. At least one gauge shall be located on each face of superstructure in each span but not less than one gauge/100 sqm. For the given solid content in the application, the dry film thickness to wet film thickness ratio should be established by prior testing in the laboratory using appropriate panels like glass plates, flat concrete, steel plates (300 x 300 mm)with similar coatings. Alternatively, the dry film thickness may be calculated from the measured wet film thickness by multiplying with the solid contents per unit volume.

2808.6 Performance Guarantee

This type of protective coating shall be executed only through authorized technical applicators of standard manufactures who have requisite work experience for having carried out similar type coating works. The Engineer shall take performance guarantee from the agency responsible for the execution of the work for a minimum period of 5 years.

2809 PROTECTIVE SURFACE COATING OF CONCRETE BY PATENTED SYSTEMS OF COATING

Patented system of protective coating like epoxy polyurethane painting system, epoxy phenolic protective system and other systems shall be used only with the approval of Engineer after the assessment of the performance of the product, backed by certificates from users, acceptance tests as per published standards, pertinently to cover the material, processes,

carbonation resistance, water vapour diffusion property, crack bridging properties, and UV resistance. The Engineer shall take performance guarantee from the agency responsible for the execution of the work for a minimum period of 5 years.

2810 REPLACEMENT OF BEARINGS

2810.1 Necessary repair/replacement of bearings shall be carried out as indicated in the repair plan or as directed by the Engineer. Care shall be taken to plan the execution of repair in the shortest possible time.

2810.2 Lifting of superstructure spans may be carried out by jacking up from below or by lifting the span from top. Where jacks are employed, their location/number and size shall be selected in such a manner so that no undue stresses are created in the structure. Jacks may be placed on piers/pier caps or specially erected trestles in accordance with the approved methodology for lifting of superstructure. All jacks shall be operated from one control panel by a single control lever. The system shall have provision for manual override to control the loads of any particular jack. The jacks should be so synchronized that differential lift between individual jacks does not exceed 1 mm.

2810.3 Precautions during Lifting of Girders for Rectification of Bearings

Walkie talkie system or similar audio arrangements should be available for communicating instructions during lifting of girders for rectification/replacement of bearings. In the event of replacement it shall be ensured that the new bearing fits into the available space.

2811 REPAIR AND REPLACEMENT OF WEARING COAT

2811.1 Repair of Wearing Coat

Repair of bituminous and cement concrete wearing coat shall be as per **Section 3000** of these Specifications.

2811.2 Replacement of Wearing Coat

i) The existing wearing coat shall be dismantled before laying fresh wearing coat.

ii) Overlay shall not be provided on existing wearing coat on bridge decks unless its structural adequacy to carry extra load of overlay is assured and certified by the Engineer.

iii) Before commencing dismantling, the nature and condition of the wearing coat shall be ascertained.

iv) Dismantling of wearing coat shall be carried out using jack

hammers or suitable manual/mechanical methods as approved by the Engineer. Care should be taken to avoid any damage to the existing structure including concrete, reinforcement or pre-stressing anchorages for cables, if any, located in the deck slab.

v) The existing expansion joint assemblies shall be removed carefully along the entire width of the carriageway if included under the scope of work or as directed by the Engineer. In such cases, the deck slab for a width of 400 mm on either side should be removed for placing of reinforcement, anchor rods, anchor bolts and other fixing assemblies for the new expansion joints and pouring of fresh concrete. The gap between the girders over the piers should be cleared of all debris. A temporary platform under the gap at the end of girders shall be erected to collect the materials falling down during concreting and fixing of expansion joints.

vi) After dismantling the existing wearing coat fresh wearing coat shall be provided as per Section 2700 of these Specifications. The expansion joint assembly, wherever dismantled shall also be fixed in position true to lines and levels.

2811.3 Precautions during Dismantling Work

For general guidelines, reference may be made to **Section 100** of these Specifications.

Dismantling work shall not be carried out at night, or during storm or heavy rain. A warning device shall be installed in the area for warning the workers in case of mishap/emergency.

Safety helmets conforming to IS:2925 shall be used by the workmen engaged in dismantling work. The sheds and tool boxes should be located away from the work site. To protect eyes and face from injuries from flying pieces, dirt, dust etc., celluloid goggles and gas masks shall be worn at the time of dismantling, especially where tools like jack hammers are deployed. Leather or rubber gloves shall be worn by the workers during the demolition of RCC work. Screens made of GI sheets shall be placed wherever necessary to prevent flying pieces from injuring the workers.

Water should be sprayed to reduce the dust while removing concrete wearing course with jack hammer. No work shall be taken up under the span when dismantling work is in progress.

2812 EXTERNAL PRESTRESSING

2812.1 Material

H.T. Strands/wires shall conform to **Section 1000** of these Specifications.

HDPE Sheathing shall conform to IS:4984 suitable for a working pressure of 6 bars. Its density shall be 955 kg/cu.m, shore hardness D63, yield stress 24 MPa and ultimate tensile strength 35 MPa.

As necessitated by the profile of the external cable, suitable strand/wire deviator block fabricated from M.S. sections shall be provided and securely fixed at the required locations. The block shall be sand blasted and given a coat of suitable paint (preferably epoxy based).

Depending upon the pre-stressing force, suitable anchorages and wedges shall be used conforming to relevant codes and Section 1800 of these Specifications.

2812.2 Workmanship

a) Stressing of cables shall be carried out as per instruction given in the drawings, and conforming to Section 1800 of these Specifications.

b) Care should be taken to avoid any damage to the existing structure by way of stress concentration or any other reason during fixing of the deviator blocks and after stressing of cable. The deviator blocks shall be so fixed as not to allow any movement due to pre-stressing forces. Radius of curvature of the surface of the deviator block interfacing with the cable shall be minimum one metre.

c) The anchorages shall be sealed with suitable epoxy mortar system after the stressing of cables. A minimum cover of 50 mm shall be provided for the anchor plates and anchorages.

d) Suitable grouting inlet points and vent points shall be provided by way of HDPE "T" vent connections to the sheathing.

e) Grouting of cables shall be carried out as per provisions of Section 1800 of these Specifications.

2812.3 It shall be ensured that no part of the existing structure is damaged/distressed due to the external pre-stressing.

The behaviour of the girder shall be monitored by measurement of deflection so that only required amount of external pre-stressing is imparted to the girder. Care shall be taken to avoid excess pre-stressing and impairment of the girders.

2813 TESTS AND STANDARS OF ACCEPTANCE

The material shall be tested in accordance with these Specifications and shall meet the prescribed criteria.

The work shall conform to these Specifications and shall meet the prescribed standards of acceptance.

2814 MEASUREMENTS FOR PAYMENT

a) For epoxy grouting measurement for sealing of cracks and injection shall be made by weight of epoxy consumed in kg for epoxy grouting. For provision of nipples required for grouting, the payment shall be for number of nipples inserted.

b) For cement grouting measurement for sealing of cracks and injection shall be made by weight of cement consumed in kg.

c) Measurement for application of epoxy mortar/protective surface coating of concrete for specified thickness shall be in square metre of surface area of application.

d) Bonding of old and new concrete by epoxy mortar shall be measured in square metre of surface area of interface.

e) Guniting/shotcreting shall be measured in square metre of surface area of application.

f) Replacement/rectification of bearings shall be measured in number of bearing assembly replaced/rectified.

g) Dismantling of wearing coat shall be measured in square metre of area of wearing course dismantled.

External pre-stressing shall be measured in tones of H.T. steel strand/wire measured from anchorage to anchorage before stressing.

2815 RATE

The contract unit rate for sealing of cracks and injection of cement grout shall include cost of all materials, labour, tools and plant, placing in position, testing, curing and other incidental expenses for the satisfactory completion of the work as per these Specifications.

The contract unit rate for application of epoxy mortar/protective surface coating for specified thickness shall include cost of all materials, labour, tools and plant, placing in position, testing and other incidental expenses including surface preparation for the satisfactory completion of the work as per these Specifications and as shown on the drawings.

The contract unit rate for guniting/shotcreting shall include cost of all materials, labour, tools and plant, placing in position, testing, curing, surface preparation and other incidental expenses including the provision of nipples for the satisfactory completion of the work as per these Specifications.

The contract unit rate for replacement/rectification of bearings shall include cost of all materials, labour, tools and plant, placing in position, site welding/riveting/bolt connections, operation of jacks and other incidental expenses for the satisfactory completion of the work as per these Specifications and as shown on the drawings.

The contract unit rate for dismantling of wearing coat shall include cost of all materials, labour, tools and plant, traffic management, signages, safety precautions and other incidental expenses including removal of existing expansion joints, if included as a part of the work by the Engineer for the satisfactory completion of the work as per these Specifications.

The contract unit rate for external pre-stressing shall include cost of all materials, labour, tools and plant, temporary works, testing, curing and other incidental expenses including careful monitoring of the deflection of girders being externally pre-stressed for the satisfactory completion of the work as per these Specifications and as shown on the drawings.

2900

PIPE CULVERTS

2901 SCOPE

This work shall consist of furnishing and installing reinforced cement concrete pipes, of the type, diameter and length as per design and details and at locations shown on the drawings or as ordered by the Engineer and in accordance with the requirements of these Specifications.

2902 MATERIALS

All materials used in the construction of pipe culverts shall conform to the requirements of **Section 1000.**

Each consignment of cement concrete pipes shall be inspected, tested, if necessary, and approved by the Engineer either at the place of manufacture or at the site before their incorporation in the works.

2903 EXCAVATION FOR PIPE

The foundation bed for pipe culverts shall be excavated true to the lines and grades shown on the drawings or as directed by the Engineer. The pipes shall be placed in shallow excavation of the natural ground or in open trenches cut in existing embankments, taken down to levels as shown on the drawings. In case of high embankments where the height of fill is more than three times the external diameter of the pipe, the embankment shall first be built to an elevation above the top of the pipe equal to the external diameter of the pipe, and to width on each side of the pipe of not less than five times the diameter of pipe, after which a trench shall be excavated and the pipe shall be laid.

Where trenching is involved, its width on either side of the pipe shall be a minimum of 150 mm or one-fourth of the diameter of the pipe whichever is more and shall not be more than one-third the diameter of the pipe. The sides of the trench shall be as nearly vertical as possible.

The pipe shall be placed where the ground for the foundation is reasonably firm. Installation of pipes under existing bridges or culverts shall be avoided as far as possible. When during excavation the material encountered is soft, spongy or other unstable soil, and unless other special construction methods are called for on the drawings or in special provisions, such unsuitable material shall be removed to such depth, width and length as directed by the Engineer. The excavation shall then be backfilled with approved granular material which shall be properly shaped and thoroughly compacted upto the specified level.

Where bed-rock or boulder strata are encountered, excavation shall be taken down to atleast 200 mm below the bottom level of the pipe with prior permission of the Engineer and all rock/ boulders in this area be removed and the space filled with approved earth, free from stone or fragmented material, shaped to the requirements and thoroughly compacted to provide adequate support for the pipe.

Trenches shall be kept free from water until the pipes are installed and the joints have hardened.

2904 BEDDING FOR PIPE

The bedding surface shall provide a firm foundation of uniform density throughout the length of the culvert, shall conform to the specified levels and grade, and shall be of one of the following two types as specified on the drawings :

i) **First Class Bedding :** Under first class bedding, the pipe shall be evenly bedded on a continuous layer of well compacted approved granular material, shaped concentrically to fit the lower part of the pipe exterior for atleast ten percent of its overall height or as otherwise shown on the drawings. The bedding material shall be well graded sand or another granular material passing 5.6 mm sieve suitably compacted/rammed. The compacted thickness of the bedding layer shall be as shown on the drawings and in no case shall it be less than 75 mm.

ii) Concrete Cradle Bedding : When indicated on the drawings or directed by the Engineer, the pipe shall be bedded in a cradle constructed of concrete having a mix not leaner than M 15 conforming to Section 1700. The shape and dimensions of the cradle shall be as indicated on the drawings. The pipes shall be laid on the concrete bedding before the concrete has set.

2905 LAYING OF PIPE

No pipe shall be laid in position until the foundation has been approved by the Engineer. Where two or more pipes are to be laid adjacent to each other, they shall be separated by a distance equal to at least half the diameter of the pipe subject to a minimum of 450 mm.

The arrangement for lifting, loading and unloading concrete pipes from factory/yard and at site shall be such that the pipes do not suffer any undue structural strain, any damage due to fall or impact. The arrangement may be got approved by the Engineer.

Similarly, the arrangement for lowering the pipe in the bed shall be got approved by the Engineer. It may be with tripod-pulley arrangement or simply by manual labour in a manner that the pipe is placed in the proper position without damage.

The laying of pipes on the prepared foundation shall start from the outlet and proceed towards the inlet and be completed to the specified lines and grades. In case of use of pipes with bell-mouth, the belled end shall face upstream. The pipes shall be fitted and matched so that when laid in work, they form a culvert with a smooth uniform invert.

Any pipe found defective or damaged during laying shall be removed at the cost of the Contractor.

2906 JOINTING

The pipes shall be jointed either by collar joint or by flush joint. In the former case, the collars shall be of RCC 150 to 200 mm wide and having the same strength as the pipes to be jointed. Caulking space shall be between 13 and 20 mm according to the diameter of the pipe. Caulking material shall be slightly wet mix of cement and sand in the ratio of 1:2 rammed with caulking irons. Before caulking, the collar shall be so placed that its center coincides with the joint and an even annular space is left between the collar and the pipe.

Flush joint may be internal flush joint or external flush joint. In either case, the ends of the pipes shall be specially shaped to form a self centering joint with a jointing space 13 mm wide. The jointing space shall be filled with cement mortar, 1 cement to 2 sand, mixed sufficiently dry to remain in position when forced with a trowel or rammer. Care shall be taken to fill all voids and excess mortar shall be removed.

For jointing pipe lines under light hydraulic pressure, the recess at the end of the pipe shall be filled with jute braiding dipped in hot bitumen or other suitable approved compound. Pipes shall be so jointed that the bitumen ring of one pipe shall set into the recess of the next pipe. The ring shall be thoroughly compressed by jacking or by any other suitable method.

All joints shall be made with care so that their interior surface is smooth and consistent with the interior surface of the pipes. After finishing, the joint shall be kept covered and damp for at least four days.

2907 BACKFILLING

Trenches shall be backfilled immediately after the pipes have been laid and the jointing material has hardened. The backfill soil shall be clean, free from boulders, large roots, excessive amounts of sods or other vegetable matter, and lumps and shall be approved by the Engineer. Backfilling upto 300 mm above the top of the pipe shall be carefully done and the soil thoroughly rammed, tamped or vibrated in layers not exceeding 150 mm, particular care being taken to thoroughly consolidate the materials under the haunches of the pipe. Approved pneumatic or light mechanical tamping equipment can be used.

Filling of the trench shall be carried out simultaneously on both sides of the pipe in such a manner that unequal pressures do not occur.

In case of high embankment, after filling the trench upto the top of the pipe in the above said manner, a loose fill of a depth equal to external diameter of the pipe shall be placed over the pipe before further layers are added and compacted.

2908 HEADWALLS AND OTHER ANCILLARY WORKS

Headwalls, wing walls, aprons and other ancillary works shall be constructed in accordance with the details shown on the drawings or as directed by the Engineer. Masonry for the walls shall conform to Sections 1300, 1400 or 1700 as applicable. Aprons shall conform to Section 2500.

2909 OPENING TO TRAFFIC

No traffic shall be permitted to cross the pipes unless height of filling above the top of the pipes is atleast 600 mm.

2910 MEASUREMENTS FOR PAYMENT

RCC pipe culvert shall be measured as complete work in linear metres along its length between the inlet and outlet ends. Culverts with multiple rows of pipes shall be measured as one unit, irrespective of the number of rows.

2911 RATE

The Contract unit rate for the pipe culvert shall include the cost of pipes including loading, unloading, hauling, handling, storing, laying in position and jointing and all ancillary works such as excavation, bedding for pipes, backfilling, concrete, masonry and aprons and incidental costs to complete the work as per these Specifications.

3000

MAINTENANCE OF ROAD

3001 GENERAL

The Specifications shall apply to all items of road maintenance works as required to be carried out under the Contract or as directed by the Engineer. The works shall be carried out in conformity with the relevant Specifications to the required level, grade and lines using approved materials. The works shall be carried out using appropriate machinery. Wherever the Specifications are not given for an item, sound engineering practice shall be adopted to the satisfaction of the Engineer.

3002 RESTORATION OF RAIN CUTS

3002.1 Scope

The work shall consist of earthwork for restoration of rain cuts in the embankment and shoulders, using suitable material, and compacting the same.

3002.2 Materials

The material used for restoration of rain cuts shall consist of soil conforming to Clause 305.2.

3002.3 Construction Operation

The area affected by rain cuts shall be cleared of all loose soil and benched. The width of the benches shall be at least 300 mm and they shall extend continuously for a sufficient length. The height of the benches shall be in the range of 150-300 mm.

Fresh material shall be deposited in layers not exceeding 250 mm loose thickness and compacted so as to match with the benching at a moisture content close to the optimum. Compaction shall be carried out using suitable equipment such as plate compactors and rammers or by suitable implements handled manually. The finished work shall conform to alignment, levels and slopes as indicated in the drawing or as directed by the Engineer.

3002.4 Measurements for Payment

The earthwork for restoration of rain cuts shall be measured in cubic metres.

3002.5 Rate

The Contract rate for the item of earthwork for restoration of rain cuts shall be payment in full

for carrying out the required operation including full compensation for:

i) Supply of labour, equipment and material including all leads and lifts and the cost of arranging land for borrow pits;
ii) Setting out;
iii) Removal of loose material from the rain cuts;
iv) Benching of old earthwork; and
v) Compacting after adding required quantity of water.

3003 MAINTENANCE OF EARTHEN SHOULDER

3003.1 Scope

The work of maintenance of earthen shoulder shall include making up the irregularities/loss of material on shoulder to the design level and cross-fall by adding fresh approved soil and compacting it with appropriate equipment or to strip excess soil from the shoulder surface as per the requirement of these Specifications.

3003.2 Material

The material to be added to the shoulder, if required, shall be a select soil conforming to Clause 305.

3003.3 Construction Procedure

This work shall involve:

i) Making up of the earthen shoulder by adding extra soil and compacting the same; and/or
ii) Stripping a layer of soil to achieve the required grade and level.

Wherever extra earth is required to be added, the earthen shoulder shall be stripped and loosened to receive fresh soil. The deficiency of thickness shall be made up in layers of loose thickness not exceeding 250 mm. Water shall be added, if required, to attain the optimum amount and the layer compacted by a smooth wheel roller, vibratory roller, hand roller, plate vibrator or hand rammer to obtain atleast 97 percent of the maximum dry density in accordance with IS:2720 (Part 8). The finished surface shall have the specified cross slope and line in accordance with the drawing or as directed by the Engineer. The side slopes shall be trimmed to the required slope with the help of grader or manual methods using hand tools.

Wherever the earth is required to be stripped from the shoulder, this shall be done either using equipment like grader or by manual means using hand tools. The resulting surface shall be uniform and have a field density of atleast 97 percent of maximum density obtained

in accordance with IS:2720 (Part 8). If the surface is not uniformly compacted, it shall be excavated to a depth of 150 mm and the soil mixed with water if required and compacted at a moisture content close to the optimum to achieve 97 percent of maximum density as stated above.

3003.4 Measurement for Payment

Maintenance of earthen shoulder shall be measured in sq. metres.

3003.5 Rate

The Contract unit rate for maintenance of earthen shoulder shall be payment in full compensation for :

i) furnishing earth required for making up of shoulders including all leads and lifts, compaction to the required density and cost of arranging land for borrow pits;

ii) excavation and stripping of earth as required and disposal of the earth at the location approved; and

iii) all labour, tools, equipment and incidentals to complete the work in accordance with these Specifications.

3004 BITUMINOUS WORK IN CONNECTION WITH MAINTENANCE AND REPAIR

3004.1 General

The scope and type of maintenance work to be carried out shall be in accordance with the provisions of the Contract or as instructed by the Engineer.

Maintenance treatments required under the Contract or instructed by the Engineer may include pothole and patch repair, crack-sealing, fog spray, dusting, slurry sealing, surface dressing, overlays and specialist repairs.

The materials (particularly patching and overlay materials) used in maintenance operations shall be of a standard not less than those specified for the original construction.

Traffic control during maintenance operations shall conform to the requirements of the Contract and Section 100.

3004.2 Filling Potholes and Patch Repairs

3004.2.1 Scope

This work shall include repair of potholes and patching of all types of bituminous pavement and paved shoulders.

The work shall include the removal of all failed material, in the pavement courses and, if necessary, below the pavement, until the root cause of the failure is removed, the trimming of the completed excavation to provide firm vertical faces; the replacement of material of at least as high a standard as that which was originally specified for the pavement layer; the application of tack coat on to the sides and base of excavations prior to placing of any bituminous materials and the compaction, trimming and finishing of the surfaces of all patches to form a smooth continuous surface, level with the surrounding road.

3004.2.2 Materials

All materials used for the pothole and patch repair of bituminous surface and underlying layers shall be in accordance with these Specifications and shall be of the same type as specified for the original construction. A mix superior to the one on the existing surface may also be used for repair work. An emulsified bitumen/modified bitumen mix compatible with the existing layer shall also be considered appropriate.

Materials used for patching shall not be of lesser bearing capacity nor of a greater porosity than the adjacent previous construction. Non-bituminous material shall not be used for patching bituminous materials.

Ready patch mix material can also be used with the specific approval of the Engineer.

3004.2.3 Preparation of the Area for Pothole and Patch Repair

Each pothole and patch repair area shall be inspected and all loose and defective material removed. The area shall be cut/trimmed to a regular shape either with jack hammers or with hand tools suitable for the purpose.

The edges of the excavation shall be cut vertically. The area shall be thoroughly cleaned with compressed air or any appropriate method approved by the Engineer to remove all dust and loose particles. Layers below the level of the bituminous construction shall be filled using material of the equivalent specification to the original construction, which shall particularly include the specified standards of compaction. The area and sides for bituminous construction shall be applied with a tack coat conforming to Clause 503 of these Specifications before back filing operation.

3004.2.4 Backfilling Operation

The mixture to be used in bituminous patching shall be either a hot mix or a cold mix in accordance with the appropriate Clauses of these Specifications or any other approved patching material. Mixing shall be done in a plant of suitable capacity. The bituminous mixture shall be placed in layers of thickness not more than 100 mm (loose) and shall be compacted in layers with roller/plate compactor/hand roller/rammer to the compaction standards defined in the appropriate Clauses of these Specifications. While placing the final layer, the mix shall be spread slightly proud of the surface so that after rolling, the surface shall be flush with the adjoining surface. If the area is large, the spreading and levelling shall be done using appropriate tools and equipment. During the process of compaction, the surface levels shall be checked using a 3 m straight edge.

3004.2.5 Measurement for Payment

Filling of potholes and patch repair shall be measured in sq m or by weight in tonnes.

3004.2.6 Rate

The contract unit rate for filling of potholes and patch repair shall be payment in full for :

i) furnishing all materials required;
ii) all works involved including excavation, trimming, filling with any non-bituminous layers required, applying tack coat, and back filling with bituminous materials;
iii) all labour, tools, equipment and incidentals to complete the work in accordance with the Specifications.

3004.3 Crack Sealing

3004.3.1 General

Crack sealing shall consist of one or more of the following operations as instructed under the Contract :

i) fog seal
ii) filling cracks with a binder, or a combination of crusher dust and a binder
iii) by treating the crack sealing as a patch repair.

3004.3.2 Fog Seal

3004.3.2.1 Scope

Fog seal for use in maintenance work shall conform to the requirements of Clause 513 of

these Specifications, and shall consist of an application of emulsified bitumen, without any aggregate cover for sealing fine hair-cracks or for rejuvenating oxidised bituminous surfaces. Areas having cracks with less than 3 mm width shall be considered for this treatment, unless otherwise instructed by the Engineer.

3004.3.2.2 Material

Bituminous emulsion for fog seal shall conform to the requirements of Clause 513 of these Specifications.

3004.3.2.3 Application

The area to be treated with fog seal shall be thoroughly cleaned using compressed air, scrubbers, etc. The cracks shall be cleaned with a compressed air jet to remove all dirt, dust, etc. The fog seal shall be applied at the rate of 0.5-1.0 litre/sq.m of emulsion, or as otherwise instructed by the Engineer, using equipment, such as, a pressure tank, flexible hose and spraying bar or lance. Traffic shall be allowed on to the surface only after the seal has set to a non-tacky and firm condition so that it is not picked up by the traffic.

3004.3.2.4 Measurement for Payment

The fog seal work shall be measured in sq. metres, calculated from the dimensions of work instructed in the Contract or by the Engineer.

3004.3.2.5 Rate

The contract unit rate for application of fog seal shall be payment in full for :

i) supplying of fog seal material and all the operations for applying it; and

ii) all the labour, tools, equipment and incidentals to complete the work in accordance with these Specifications.

3004.3.3 Crack Filling

3004.3.3.1 Scope

Crack filling shall be carried out using a binder of a suitable viscosity, normally a slow-curing bitumen emulsion, as instructed by the Engineer. For wider cracks, in excess of an average of 3 mm in width, the application of emulsion shall be preceded by an application of crusher dust, or other fine material or a suitable premix acceptable to the Engineer.

3004.3.3.2 Materials

Bitumen for use in crack sealing shall be of a slow curing type as instructed by the Engineer. Dust for crack sealing, when used, shall be crusher dust or some other suitable fine material approved by the Engineer, passing the 2.36 mm sieve but with a maximum of 10 percent passing the 0.075 mm sieve.

3004.3.3.3 Construction

If crusher dust or other graded fine material is to be used it shall be placed in the cracks before the application of binder and the cracks filled to a level approximately 5 mm below road surface level. The surface of the road shall be swept clear of dust prior to the application of binder or premix. Binder shall be poured into the cracks, taking care to minimise spillage. If spillage onto the road surface does occur, dust shall be applied to the excess bitumen until it is blotted up. Where a crack-filling mix is used, a squeegee shall be used to force the premix into the cracks wider than 10 mm.

3004.3.3.4 Measurement

The work of crack sealing in areas where patching is to be done subsequently shall be measured in sq.m. Isolated cracks where no patching is to be done subsequently shall be measured in linear metre.

3004.3.3.5 Rate

The contract unit rate for crack sealing shall be payment in full for :

i) supplying all necessary materials and for the work of applying them;

ii) all labour, tools, equipment and all incidentals necessary to complete the work according to these Specifications.

3004.3.4 Crack Prevention Courses

Where specified crack prevention courses shall conform to Clause 517.

3004.4 Dusting

3004.4.1 Scope

Dusting shall consist of the application of crusher dust or other fine graded material approved by the Engineer to areas of road where bleeding of excess bitumen is occurring.

ii) all tools, equipment and incidentals to complete the work in accordance with the Specifications.

3005.2 Repair Involving Removal of Old Joint Sealant and Sealing with Fresh Sealant in Cement Concrete Pavements

3005.2.1 Scope

The repair of sealant of contraction, longitudinal or expansion joints shall include removal of the existing sealant and resealing the joint with fresh sealant material.

3005.2.2 Material

Sealant material to be replaced shall be either hot poured rubberised bitumen or cold-poured polysulphide or silicone sealant as per Clause 602.2.10. As per the recommendation of the manufacturer, appropriate type of primer shall be applied.

3005.2.3 Repairing procedure

The existing sealant shall be raked out with the help of a metal raker such that most of the sealant is removed. Subsequently, the sealant stuck to the sides of the grooves shall be removed thoroughly either by using saw cutting machine so that grooves may be widened by 1 mm or by sand blasting. In no case the old sealant shall be present during resealing operation. If joint grooves are found inadequate in depth, they shall be deepened as directed by the Engineer. The edges of the groove shall be chamfered. Any spalls of the joint shall be made good by epoxy mortar.

Before commencing the sealing operation, compressed air shall be used to clean the joint grooves. A heat resistant, paper backed compressible debonding strip or tape and backer rod should be inserted in accordance with the requirement of Clause 602.10.2. Sealant may be poured either using hand held pourer or using mechanized sealing machines. Sealants should not be heated directly but in double jacketed machine. All precautions and arrangements shall be taken not to spill the sealant on the concrete pavement. The sealant may be poured to a depth of 3 mm from the pavement surface.

3005.2.4 Measurements for Payment

Repair of joint sealant shall be measured in linear metres.

3005.2.5 Rate

Contract unit rate for repair of joint sealant shall be in full compensation for :

a) removal of old sealant, regrooving or sand blasting the sealing groove and placing of debonding strip or tape.

b) all tools, equipments and incidentals to complete the work in accordance with the Specifications.

3100

REINFORCED SOIL

3101 SCOPE

The work covers construction of reinforced soil structures together with the construction of earthwork in layers, assembly and placing of reinforcing elements and facia elements during the construction process and all associated works.

The work shall include the design and construction of the reinforced soil structure and ground improvement measures required, if any.

The reinforced soil retaining structures can be used as, (i) Reinforced soil retaining wall, (ii) Reinforced soil abutment, (iii) Reinforced soil slope

Reinforced soil structures with slope face angles steeper than 70° are categorized as reinforced soil walls and those with slope face angle less than 70° are considered as reinforced soil slopes.

3102 DESIGN

Guidelines for design are given in Annexure-1.

3103 REINFORCING ELEMENT

3103.1 The reinforcing element shall be metallic in the form of strips (aluminum alloy strip, copper strip, carbon steel strip, galvanised steel strip, stainless steel strip, ladder) or mats of metal (steel grids, woven and welded steel wire meshes) or synthetic (PET, HDPE, PVA, PP) reinforcement in the form of grid or strip or strap or combination of metallic or synthetic or any other proprietary material which may be approved by the Engineer and shown on the drawings

3103.2 Aluminum alloy strip shall comply with BS:1470 quality 5454 in the H 24 condition.

3103.3 Copper strip shall comply with BS:2870 quality C 101 or C 102 in the ½ H condition and shall have 0.2 percent proof stress of not less than 180 N/mm^2.

3103.4 Carbon steel strip shall comply with BS EN 10025 or IS:2062 and have a silicon content of not more than 0.55 percent. The fabricated element shall be galvanized in accordance with IS:4759 and IS:2629 and the minimum zinc coating weight shall not be less than 1000gm/sq.m

The steel strips with minimum bearing and shear strength of 490N/mm^2 shall comply with the requirements of BS EN 10025, Grade S 355 JR, or IS:2062 grade Fe 490, except the elongation (on base metal) for which minimum 22 percent is acceptable.

The panel lugs shall be manufactured from hot-rolled steel strips with the same steel quality and grades as specified above, except that the minimum zinc coating weight not less than 600 gm/sq.m.

All permanent metallic connectors (exposed to soil), tie strips and lugs shall be hot dip galvanized. Nuts/ bolts (fasteners) shall be galvanized as per requirements of IS: 1367-Part 3. Nuts/ bolts (fasteners) shall be of grade 10.9.

For all metallic components, where holes or penetrations are made through the reinforcing elements to accommodate connection such as bolts, pins, or other, the cross section thickness and/or width of metallic component shall be increased to account for section loss caused by the hole or penetration.

3103.5 Stainless steel strip shall comply with BS: 1449 (Part 2) quality 315 S 31 or 3/6 S 33 except that the material shall be cold rolled to provide a 0.2 percent proof stress of not less than 400 N/mm^2 and the tensile strength shall not be less than 540 N/mm^2.

3103.6 All metallic components buried in soil shall be of electrolytically compatible materials.

3103.7 Geotextile, Geogrids and other Geosynthetic Materials used as Reinforcing Elements

3103.7.1 Geotextile

High strength high tenacity geotextile fabrics used as reinforcement in the construction of reinforced slopes or in the base of reinforced soil structure as reinforcement, shall be considered as reinforcing element and shall satisfy all the requirements stipulated for geosynthetic reinforcing elements, in Clause 3103.7.2.

Geotextile fabric used for separation, filtration and/ or drainage shall satisfy the requirements given in relevant Clauses of Section 700 Geosynthetics.

3103.7.2 Geogrids

The manufacturer of geogrids, geotextiles, geostrips, polymeric strips or straps, polymeric ties or any other geosynthetic material, including any proprietary geosynthetic material, for use as reinforcing element shall fulfill the following requirements:

a) Shall have ISO (ISO-9001) or CE Certification for manufacturing process and quality control, and

b) The product shall have certification for use as soil reinforcing material from an agency accredited for certifying geosynthetic reinforcement products.

c) The manufacturer shall provide test reports from an independent laboratory with valid accreditation, for all the tests needed to establish all the reduction factors listed below

RF_{CR} - Reduction factor for creep.

RF_{ID} - Reduction factor for installation damage

RF_{W} - Reduction factor for weathering

RF_{CH} - Reduction factor for chemical/ environmental effects.

f_s - Factor for the extrapolation of data

All the above factors shall be determined in accordance with the provisions of ISO/TR 20432- "Guide to the determination of long-term strength of geosynthetics for soil reinforcement."

Project Specific Tests/Data

Test for the ultimate tensile strength shall be carried out on a random sample for each grade of reinforcement as per ISO-10319. The test results shall be accompanied by stress-strain curves showing strength at 2% and 5% strain and strain/elongation at failure.

The manufacturer shall also provide the results of ultimate tensile strength for each lot and all grades of reinforcement proposed for use in the project.

Annual Average Daily Temperatures (AADT)/design temperature of the project site shall be worked out and values of reduction factor for creep RF_{CR} and for RF_{CH} shall be provided as per procedures given in ISO/TR-20432.

Tests shall be carried out to provide values of

i) Pull-out coefficient as per ASTM D 6706 "Standard Test Method for Measuring Geosynthetic Pullout Resistance in Soil" and

ii) Coefficient of interaction between reinforced fill soil and geogrids as per ASTM D 5321-"Standard Test method for Determining the Coefficient of Soil and Geosynthetic or Geosynthetic and Geosynthetic Friction by the Direct Shear method" or as per IS: 13326: Part 1-1992 "Method of test for the evaluation of interface friction between geosynthetics and soil: Part 1 Modified direct shear technique" for all types of geogrids.

One set of project specific tests shall be conducted at third party accredited laboratory or at a reputed institute.

Each roll shall have at least one identification label with roll number and product type.

3104 EARTH FILL

The fill material in the reinforced soil zone shall have drained or effective angle of friction not less than 30°, measured in accordance with IS:2720 (Part 13), by conducting a drained direct shear test. In case the fill material has 25 percent or more particles of 4.75 mm or larger, drained shear test using large shear box may be conducted (IS:2720:Part 39:Section 1). The gradation of fill soil shall be as per following limits.

Sieve Size	Percentage Passing
75 mm	100%
425 micron	0-60%
75 micron	less than 15
PI ≤6	

Materials with more than 15 percent passing 75 micron sieve, but less than 10 percent of particles smaller than 15 microns are acceptable provided PI is less than 6 and angle of friction is not less than 30^0.

Fly ash may be used as fill material in reinforced soil walls provided its angle of internal friction is not less than 300 and PI is less than 6. Gradation requirements need not be completely satisfied. Reference may be made to IRC Guide lines on Use of Flyash in Road Embankments (IRC:SP-58). Fly ash shall also satisfy requirements concerning pH and environmental conditions of the fill vis-à-vis the reinforcement type as specified in Clause 3014.1.

The fill material used in the reinforced soil zone shall be free from organic or other deleterious materials and shall not react adversely (chemically, electrically or biologically) with the reinforcement material and/or facia material.

Properties of fill soil in the reinforced zone, unreinforced zone (or retained/back fill) soil and the foundation soil shall be determined accurately during the construction phase, as per quality assurance plans and directions of Engineer so as to ensure that these are the same as those considered in the design phase.

The fill soil in the unreinforced zone shall conform to the requirements specified in the design.

3104.1 Environmental Conditions of Fill

3104.1.1 Steel Reinforcement

Where galvanized steel reinforcement is used, the fill material shall be free draining granular material and shall meet the following requirements as per Table 3100.1.

Table 3100.1 : Recommended Limits of Electrochemical Properties for Reinforced Fills with Steel Reinforcement

Property	Criteria	Test Method
Resistivity	> 3000 ohm-cm	AASHTO T-288
pH	> 5 and < 10	AASHTO T-289
Chlorides	< 100 PPM	ASTM D 4327
Sulphates	< 200 PPM	ASTM D 4327

3104.1.2 Geosynthetic Reinforcement

Where geosynthetic reinforcement is used for reinforcing elements manufactured from polyester yarn, pH value of the fill material shall be between 3 and 9, and for reinforcing elements manufactured from PVA, PP and HDPE, the pH value shall be greater than 3.

3105 FACIA MATERIAL

3105.1 The facing system shall be one of the following

a) Precast reinforced concrete panels

b) Precast concrete blocks and precast concrete hollow blocks.

c) Gabion facing

d) Wrap around facing using geosynthetics

e) Metallic facing, prefabricated in different shapes including welded wire grid and woven steel wire mesh

f) Other proprietary and proven systems

Facing shall be sufficiently flexible to withstand any deformation of the fill and foundations.

The facia units to be adopted in the project shall be shown in the drawings and shall be approved by the Engineer.

3105.1.1 Precast Reinforced Concrete Panels

The minimum thickness of precast concrete panels shall be 180 mm including facing textures, logos and embellishments. The grade of concrete shall be minimum M35. The concrete shall conform to the requirements of Section 1700 of these Specifications.

Facia panel systems shall have provision of both horizontal and vertical gaps to prevent concrete to concrete contact. The horizontal gap between the facing elements shall be maintained by provision of Ethylene Propylene Diene Monomer (EPDM) pad. Bedding

material shall consist of either cement mortar or a durable gasket seating such as resin bonded cork, bitumen bonded cork or EPDM.

The joints between the panels shall be covered from inside with non-woven geotextile strips glued to the facing element ensuring full coverage of joints. Synthetic glue shall be used for this purpose. The width of the geotextile strip shall not be less than 100 mm.

3105.1.2 Precast Concrete Blocks/Segmental Blocks/Modular Blocks

Precast concrete blocks are dry cast and shall be manufactured from fully automatic block making machines. The minimum grade of concrete shall be M 35 for all kinds of modular blocks. In case of hollow blocks, the hollow area shall not exceed 40 percent of the cross sectional area of the block. The outer side of the block shall have minimum thickness of 100 mm.

3105.1.3 Gabion Facia

Where gabion facia is used, it shall conform to the provisions of BS 8006-1:2010 and EN 14475 and made of mechanically fabricated and selvedged double twisted hexagonal mesh. Wire used for the double twisted mesh shall be hot dip galvanized as per IS:4826 – heavily coated and soft type, with wire and mesh properties in accordance with EN-10223 with minimum Zn or Zn + alloy coating as per EN-10244 and 0.5 mm thick PVC coating as per EN-10245 and ISO-527.

3105.1.4 Wrap Around Facing using Geosynthetics

Where geosynthetics, including geogrids are used as wrap around facia, these shall form a part of the reinforcing element. The wrap around shall have adequate length to resist pull out and the wrap around length shall be calculated on the basis of safety in pull out. Wrap around facia shall be protected by suitable means, against adverse effects of natural forces.

3105.1.5 Metallic Facing, Prefabricated in Different Shapes Including Welded Wire Grid, Steel Sheet and Woven Steel Wire Mesh

Where steel sheet and steel grids facings are used for facing, steel for steel sheet shall be as per BS:1449-Part 1 and steel grids shall conform to BS:4482, BS:4483 and BS:4489.

Where mechanically woven steel wire mesh in wrap around form is used for facing, the steel wire mesh (IS:4826, IS:280, IS:13360, EN:10218, EN:10223, EN:14475) shall be with mechanical selvedging and bottom panel shall continue as an integrated tail mesh.

Where welded steel wire mesh units in wrap around form (EN:10079, EN:10080, and EN:ISO 1461, EN:14475) are used as facing, the bottom panel shall continue as an integrated tail mesh.

3105.2 Facia type adopted shall be given in the design and shown with complete details in the drawings. The system supplier shall provide any test data to satisfy the Engineer regarding the properties and suitability of the facia system adopted, if so required.

Where facia such as wrap around or gabion or welded wire and woven steel wire mesh facings have been used and where climate conditions are appropriate, a green finish shall be provided where specified.

3105.3 Connection between the Facia and Reinforcement

Connection between the facia panels and the reinforcing element shall be by using either nut or bolt, HDPE inserts with bodkin joint, hollow embedded devices, polymeric/steel strips/ rods/pipes, fibre glass dowels or any other material shown in the drawings. The connection between the panel and the reinforcement shall provide for 100 percent of the long term design strength of the reinforcing element in continuity.

In case of modular block facia and other type of facia such as gabion facia, where the reinforcement is held by friction between the facia block and the reinforcement, the connection strength shall be determined as per ASTM D 6638 "Standard Method of Test for Determining Connection Strength between Geosynthetic Reinforcement and Segmental Concrete Units."

The available connection strength shall satisfy the design requirements and shall not be less than the maximum possible tensile force that the reinforcement layer under consideration may be subjected to.

3106 CONSTRUCTION DETAILS

3106.1 Depth of Foundation

A strip footing, minimum 350 mm wide and 150 mm thick in M15 grade plain concrete, shall be provided at founding level to receive the facia or the bottom most reinforcement.

The depth of embedment below the finished ground level at the foot of the wall shall not be less than 1000 mm. In case rock is met above founding level, the depth of embedment shall be adjusted as per ground conditions.

3106.2 Laying of Reinforcement

The reinforcing elements shall be placed at right angles to the face of the wall or design axis, with greater cross-sectional dimension in the horizontal plane and the length shall be as shown in the drawings. Reinforcing elements such as geogrids, shall be stretched and held

taut by driving nails or pegs at the farther end.

3106.3 Facing Batter

It may be necessary to set facing unit at an additional batter than as provided in the drawings since there is a tendency for initially positioned units of facia to lean outward as the fill material is placed and compacted. Care and caution shall be taken to accommodate this phenomenon. At the end of the construction, the face may have a slight residual inward batter.

3106.4 Drainage

Drainage bay shall be provided as shown in the drawings. The width of the drainage bay shall be 600 mm behind the facing element.

The drainage material shall conform to the specifications of the filter media as per Clause 2504.2.2 of these Specifications.

3106.5 Laying and Compaction

The reinforcing elements shall be laid free from all kinks, damage and displacement during placing, spreading, leveling and compaction of the fill. The programme of filling shall be such that no construction plant moves directly on the reinforcement.

All construction plant having a mass exceeding 1500 kg shall be kept at least 2.0 m away from the face of slope or wall.

In the area up to 2.0 m from the face of slope or wall, the following compaction plant shall be used:

i) Vibratory roller having a weight per metre width not exceeding 1300 kg with total weight not exceeding 1500 kg

ii) Vibratory plate compactor of maximum weight 1000 kg

iii) Vibro tamper having a weight not exceeding 75 kg

Before allowing the movement of vehicles over the reinforcement, a minimum compacted thickness of 150 mm shall be provided over the reinforcement and the speed of the vehicles shall be restricted to 10 km/hr.

During construction of reinforced fill, the retained material beyond the reinforcement at the rear of the structure shall be maintained at the same level as reinforced fill.

Fill shall not be placed on surface that contains mud, organic soil or area that have not met compaction requirement.

The thickness of compacted layer shall not be more than 200 mm, compacted to 97 percent of maximum laboratory density measured as per IS:2720 (Part 8).

3106.6 Construction and Serviceability Tolerances

The construction tolerances shall be as per the following:

Casting of pre-cast RCC panels: All elements shall be manufactured within the following tolerances:

- All dimensions within ± 5 mm
- Evenness of the front face: ± 5 mm over 1500 mm
- Difference between lengths of two diagonals: 5 mm max.
- Thickness: + 5 mm (-) 0 mm

Table 3100.2 : Tolerances for Faces of Retaining Walls and Abutments

	Tolerance
Location of plane of structure	± 50 mm – metallic reinforcement ± 75 mm – synthetic reinforcement
Bulging (Vertical) and Bowing (Horizontal)	± 20 mm in 4.5 m template (Metallic) ± 30 mm in 4.5 m template (Synthetic)
Steps at joints	± 10 mm

Dimensional Tolerances for Modular Blocks

Dimensions of modular concrete blocks shall not differ more than ± 2.5 mm for length and width and ± 1.5 mm in height.

Minimum Vertical Movement Capacities of Facing Systems

Minimum vertical movement capacities required for facing systems to cope with vertical internal settlement of reinforced fill shall be as below:

Table 3100.3: Minimum Vertical Movement Capacities of Facing Systems

Structural Form	Minimum Vertical Movement Capacity of System
Discrete panels	Joint closure of 1 in 150 relative to panel height
Full height panels	Vertical movement capacity of connections 1 in 150 relative to panel height
Semi-elliptical facings	Vertical distortion of 1 in 150 relative to panel height
Geotextile/ Geogrid wrap-around facings	No specific limit except for appearance or serviceability considerations

3106.7 Capping Beam, Crash Barrier and Friction Slab

Capping beam, crash barrier and friction slab shall be provided as per the design and drawings.

3107 REINFORCED SOIL SLOPES

This section deals with construction of reinforced soil structures that have a slope face angle flatter than 70°.

3107.1 Reinforcing Elements

Any type of material used as reinforcing element for the construction of a reinforced soil slope shall meet all the requirements provided in the Clause 3103. Any Geosynthetic material used as reinforced element of the construction of a reinforced soil slope shall meet all the requirement in Clause 3103.7.

3107.2 Fill Material

The fill material used as the reinforcing fill in the reinforced soil slope shall meet all the requirements for fill material specified in Clause 3104. However the friction angle of the fill material in this case shall not be less than 28°.

3107.3 Facia for Reinforced Soil Slope

Facia of reinforced soil slope shall be one of the following types

a) Wrap around facing using geosynthetics

b) Gabion facing

c) Metallic facing, prefabricated in different shapes including welded wire grid and woven steel wire mesh.

d) Precast reinforced concrete panels

e) Precast concrete blocks and precast concrete hollow blocks.

The specifications for the materials used for above facing types shall be as provided in **Clause 3105.1.**

3107.3.1 Wrap Around Facia using Prefabricated Geosynthetic Bags

Where specified wrap around facia using prefabricated geosynthetic bags shall be used in the construction of reinforced soil slopes for slope angles less than 45°. Such type of facia shall conform to the provisions in EN:14475.

3107.4 Connection between the Facia and Reinforcement

Connection between facia and reinforcement in the reinforced soil slope shall satisfy the design requirements.

3107.5 Facia type adopted shall be given in the design and shown with complete details in the drawings. The system supplier shall provide any test data to satisfy the Engineer regarding the properties and suitability of the facia system adopted, if so required by the Engineer.

Where facia such as wrap around or gabion or welded wire and woven steel wire mesh facings have been used and where climate conditions are appropriate, a green finish shall be provided where specified.

3107.6 Laying and Compaction

Laying of the reinforcement in the reinforced soil slope and the compaction of the fill shall conform to the provisions of Clause 3106.5.

3108 SYSTEM RESPONSIBILITY, PERFORMANCE BOND

3108.1 System Responsibility

If specified in the contract, the system supplier shall provide performance bond in conformance with the contract requirements. The performance bond shall be valid for atleast 20 years.

3109 MEASUREMENT FOR PAYMENT

3109.1 Reinforced Soil Wall

The measurement for payment for reinforced soil wall shall be in square metres of finished work of each face and shall be measured in the plane of final inclination specified in the drawings. The measurement of length shall be the finished work along the length of the road. The measurement of height along the slope shall be done from the top level of the footing on which the facia element is placed to the top of the capping beam.

Measurement for friction slab and crash barrier shall be in linear metres.

3109.2 Reinforced Soil Slope

The measurement for payment for reinforced soil slope shall be in square metres of finished work of each face and shall be measured in the plane of final inclination specified in the drawings. The measurement of length shall be the finished work along the length of the road. The measurement of height along the slope shall be done from the top of the leveling pad, where provided, to the top of the embankment. Where leveling pad is not provided, the height shall be measured, in the final plane of inclination specified in the drawings, from the bottom of the slope face.

3110 RATES

The rate shall include cost of material, labour, plant, royalties, handling, storage and transportation expenses, cost of bed block, leveling pad, facia elements, capping beam, connectors, reinforcing elements, scaffolding, supply of the specified filter media material, supply of soil fill for the reinforced as well as unreinforced zone of the quality specified in the contract, placing, spreading and compaction through mechanical means.

The rate shall include full compensation for design, drawings and testing of materials.

The rate shall include the cost of investigations, design and construction of ground improvement measures.

The payment for friction slab and crash barrier shall be made separately.

ANNEXURE TO SECTION 3100

A1 DESIGN AND DRAWINGS

A1-1.1 Where the contract provides for the design of reinforced soil structure, the same shall be carried out in accordance with the following standards as applicable

1.1.1 BS:8006-1-2010 "Code of Practice for Strengthened/Reinforced Soils and other Fills"

1.1.2 AFNOR NF-P94-270-"Geotechnical Design - Retaining Structures-Reinforced and Soil Nailing Structures".

1.1.3 FHWA-NHI-10-024 and FHWA-NHI-10-025 -"Design and Construction of Mechanically Stabilized Earth Walls and Reinforced Soil Slopes"

A1-1.2 The long term allowable design strength (T_{al}) of the geosynthetic reinforcement is defined by the following relationship

$$T_{al} = \frac{T_{ult}}{RF_{CR} \times RF_{ID} \times RF_{W} \times RF_{CH} \times f_s}$$

Where,

T_{ult} is the ultimate tensile strength (also called characteristic or short term strength)

RF_{CR} - Reduction factor for creep.

RF_{ID} - Reduction factor for installation damage

RF_{W} - Reduction factor for weathering

RF_{CH} - Reduction factor for chemical/ environmental effects.

f_s - Factor for the extrapolation of data

The cumulative reduction factor obtained as RF_{CH}x RF_{W} is also referred to as reduction factor for durability.

The value of RF_{CR} and RF_{CH} corresponding to the Average Annual Daily Temperature (AADT)/ design temperature of the project area shall be used in the design.

The stresses calculated for any reinforcement layer as per the design method adopted shall be compared with the long term allowable design strength (T_{al}) to check for adequacy. Connection strength and Pullout safety shall also be checked.

A1-1.3 The design shall conform to loadings of IRC:6 or as per contract. Earthquake loadings shall be considered as per IS:1893-Part 1-2002. Checks shall be made for seismic conditions also as per provisions of documents listed in 1.1.2 or 1.1.3 as applicable.

A1-1.4 The allowable bearing capacity of the ground shall be checked as a part of the design process and for ensuring the safety of the structure. Where necessary, measures

to improve the bearing capacity shall be worked out and included in the design, based on adequate subsurface investigation and testing.

The design for ground improvement shall be in accordance with the relevant IS/IRC guidelines.

A1-1.5 Where modular block walls are used in zones with seismic intensity of greater than zone 3, connection strength shall be reduced to 80 % of its static values as per FHWA NHI-10-024 guidelines Clause No 4.4.8.a. Further, the blocks above the uppermost layer of soil reinforcement must be secured against toppling under all seismic events.

A1-1.6 **Crash Barrier :** Horizontal impact load of 29 kN/m shall be considered in the design of crash barrier, which load shall be resisted by the upper two layers of the reinforcement over the full length.

A1-1.7 Where the height of reinforced soil wall exceeds 10 m, the designer may consider providing a berm. The minimum width of such berm shall be 1.5 m.

A1-1.8 Drawings showing layout of the reinforcing elements in the cross section shall be provided for every 1 m change of height or such height where change in the layout of reinforcements occurs. Complete plan and profile drawings shall also be provided.

A1-1.9 Design and drawings shall be submitted for approval of the Engineer at least 3 weeks before the proposed date of commencement of construction of the reinforced soil wall/ structure.

Table A1 : Indicative Range of Reduction Factor Values

Polymer Type	RF_{CR}	RF_{ID}	RF_{CH} $RF_W = RF_D$	f_s
PET	1.36-1.59	1-1.31	1-1.3	1-1.37
PVA	1.42	1.06-1.31	1-1.3	1-1.37
HDPE	2.59-2.63	1.02-1.12	1-1.3	1-1.37

Note :

1. These values are the indicative range for different reduction factors for geogrids made by using different types of materials and various manufacturers. The value of reduction factors may differ from product to product. **However, actual certified values shall be used in the design.**
2. RF_{CR} *and* RF_{CH} values mentioned in the above table are for 20^{0}C.

A2 SPACING AND LAYOUT OF REINFORCEMENT IN REINFORCED SOIL WALLS

A2-1.1 The spacing of reinforcement shall be established based on the design principles and standards as per provisions of Clause A1. However, in the actual layout of

reinforcing elements, the following shall be adhered to as provided in the guidelines of FHWA NHI-10-025.

i) To provide a coherent reinforced soil mass, the vertical spacing of primary reinforcement shall not exceed 800 mm, in all types of reinforcement.

ii) For walls constructed with modular blocks and deriving their connection capacity by friction, and also for any other facia configurations, where connection capacity is by friction, the maximum vertical spacing of reinforcement shall be two times the block width (measured from front fact to back face of the block). Further, the maximum spacing of reinforcing elements shall not exceed 800 mm in all cases.

The maximum height of facing left unreinforced a) above the uppermost reinforcing layer and b) below the lowest reinforcing layer, shall not exceed the width of the block (measured from the front face to back face of the block.)

iii) In case modular blocks are used for facia, no more than one intervening block shall be left without having primary reinforcement.

iv) In case of wraparound facings for walls, the maximum spacing of reinforcing elements shall not exceed 500 mm, to protect against bulging.

v) Where panels are used, the maximum spacing of reinforcement shall not exceed 800 mm. The spacing of nearest reinforcing element shall be such that maximum height of facing above uppermost reinforcement layer and below the lower most reinforcement layer does not exceed 400 mm.

vi) Reinforcement spacings worked out from the design procedures shall be configured to fit the above parameters.

A2-1.2 Where as the role of the primary reinforcement is to carry the tensile forces in the reinforced fill, secondary reinforcement may be required to protect the slope face from local sloughing and instability depending upon the facia configuration adopted. Where secondary reinforcement is used, stability of the area near the slope face shall be checked separately.

Where metallic type facia elements are used, the lower part of the facia element may be extended into the fill to serve as a secondary reinforcement. In other types of facia, geogrids may also be used as a secondary reinforcement. The length of the secondary reinforcement shall be adequate to provide local stability in the vicinity of the slope face.

A3 REINFORCED SOIL SLOPES

A3-1.1 Reinforced Soil Slopes

Reinforced soil slopes are used in a wide variety of situations, such as

a) Construction of new embankments

b) Widening of existing slopes.

c) To construct a reinforced slope above a reinforced soil wall.

Reinforced slopes with face angle between 70° and 45° are classified as steep slopes and those with face angle flatter than or equal to 45° are classified as shallow slopes.

Design: The design and spacing of reinforcement shall be established based on the design principles of Clause A1 and per the provisions in standards BS:8006-1-2010, FHWA-NHI-10-024 and FHWA-NHI-10-025. The design is mainly based on rotational stability analysis.

Steep slopes require a suitable facing to hold the reinforcement in-place as well as to protect the slope from local instability adjacent to the face. In the case of flatter slopes also, facing may be called for. Depending upon the properties of the fill and local climatic conditions of the area, suitable slope protection measures need to be adopted.

Where wrap around facia, gabion facia, woven and welded wire mesh facia are used suitable batter needs to be given. This batter may also be achieved by means of providing stepped offsets in placing the facia elements.

A3-1.2 Facia

Facing shall enable the construction within specified tolerances of vertical and horizontal alignment and it should perform over the design life. The facing system should be able to meet the functional requirements such as rigidity, flexibility, aesthetics, environmental considerations etc. depending on location, purpose and use of structure.

For reinforced soil slopes of permanent nature, the durability of basic material for facing shall be ensured. A suitable filter should be provided behind the woven or welded steel wire mesh elements when they are provided in wrap around form. For steeper slopes in high rainfall intensity and/or high seismicity areas, combination of woven and welded steel wire mesh elements with additional stiffening elements and filter cloth shall be used to achieve flexibility, erosion prevention and stiffness requirements.

Where geosynthetics are used as facing for permanent reinforced slope structures, outer facia elements are required to be protected against UV degradation from sunlight. When vegetation is used as the facia cover, the face should provide a suitable medium like coir or jute for the establishment and continued growth of vegetation. For a vegetated face, several interrelated aspects need to be considered, including the climate, water requirements of plants and water availability, site location aspect, altitude, amount and frequency of precipitation, exposure, form of facing and erosion resistance capability to ensure permanent vegetative covering throughout the design life . If the characteristics of back fill soil are not adequate to support vegetation, suitable top soil material may be placed at the front face separated from the fill by an appropriate separator.

The contractor shall provide facing for the reinforced soil slope as approved by the designer and shown in the drawing plan.

ANNEXURE TO SECTION 3100

LIST OF CODES USED IN THE TEXT

S. No	Code	Description
1)	BS:8006-1:2010	Code of practice for strengthened/reinforced soils and other fills
2)	FHWA-NHI-10-024-Vol I & Vol II	Design and Construction of Mechanically Stabilized Earth Walls and Reinforced Soil Slopes
3)	AFNOR NF-P94-270	Geotechnical Design-"Retaining structures-Reinforced and Soil nailing structures"
4)	IS:1893-Part 1:2002	Criteria for Earthquake resistant design of structures-Part 1: General provisions and buildings
5)	IS:13360:Part 3.	Plastics - Methods of Testing - Part 3 : Physical and Dimensional Properties - Section 1
6)	IS:280	Specification for Mild steel wire for general engineering purposes
7)	IS:2720 (Part 8)	Determination of water content-dry density relation using heavy compaction
8)	IS:2720 (Part 13)	Methods of test for soils part 13 : Direct Shear Test
9)	IS:2720 : Part 39 : Section 1	Direct shear test for soils containing gravel, Section 1 Laboratory test
10)	IS:13326-Part 1	Method of test for the evaluation of interface friction between geosynthetics and soil: Part 1 modified direct shear technique" for all types of geogrids
11)	IRC:6	Standard specifications and code of practice for road bridges
12)	IRC:SP:58-2001	Guidelines on Use of Flyash in Road Embankments
13)	ASTM 974	Standard Specification for Welded Wire Fabric Gabions and Gabion Mattresses (Metallic–Coated or Poly(Vinyl Chloride) (PVC) Coating)
14)	ASTM 975	Standard Specification for Double–Twisted Hexagonal Mesh Gabions and Revet Mattresses (Metallic–Coated Steel Wire or Metallic-Coated Steel Wire With Poly(Vinyl Chloride) (PVC) Coating)
15)	ASTM D 6706	Standard Test Method for Measuring Geosynthetic Pullout Resistance in soil

16)	ASTM D 6638	Standard Test Method for Determining Connection Strength Between Geosynthetic Reinforcement and Segmental Concrete Units (Modular Concrete Blocks)
17)	ASTM D 5321	Standard Test Method for Determining the Coefficient of Soil and Geosynthetic or Geosynthetic and Geosynthetic Friction by the Direct Shear method
18)	EN 10218	Steel Wire and Wire products- General Part 2- Wire Dimensions and Tolerances
19)	EN 10223	Steel Wire and Wire Products for Fences- Hexagonal Steel Wire Netting for Engineering Purposes
20)	EN 10244	Steel and Wire Products – Non Ferrous Metallic Coating on Steel Wire
21)	EN 10245	Steel and Wire Products – Organic Coatings on Steel Wire
22)	EN 10079	Definition of Steel Products
23)	EN 10080	Steel for the Reinforcement of Concrete — Weldable Reinforcing Steel — General
24)	EN 1461	Hot Dip Galvanized Coatings on Fabricated Iron And Steel Articles- Specifications and Test Methods
25)	EN 10025-2	Hot Rolled Products of Structural Steels - Part 2-Technical Delivery Conditions for Non-Alloy Structural Steels
26)	EN-14475	Execution of Special Geotechnical Works- Reinforced Fill
27)	BS:1470	Specification for Wrought Aluminium and Aluminium Alloys for General Engineering Purposes
28)	BS:2870	Specification for Rolled Copper and Copper Alloys: Sheet, Strip and Foil.
29)	ISO-10319	Geosynthetics - Wide-Width Tensile Test
30)	ISO/TR 20432	Guide to the Determination of Long-Term Strength of Geosynthetics for Soil Reinforcement
31)	ASTM D 4327	Standard Test Method for Anions in Water by Chemically Suppressed Ion Chromatography
32)	AASHTO T-288	Standard Method of Test for Determining Minimum Laboratory Soil Resistivity
33)	AASHTO T-289	Standard Method of Test for Determining pH of Soil for Use in Corrosion Testing

3200

SOIL NAILING

3201 SCOPE

The specifications shall apply to soil nailing works as required to be carried out under the Contract or as directed by the Engineer.

3202 NAIL INSTALLATION METHODS

3202.1 Generally used soil nail installation techniques in practice are: (i) drilled and grouted soil nails, and (ii) driven soil nails. Grouted nails are recommended for all types of soil nail walls applications; and in particular, for walls with vertical height more than 7 m. Driven nails shall only be used when wall heights are smaller (less than or upto 7.0 m). The major difference between the two is the pullout resistance of the soil nails and grouted soil nails are expected to have higher pull out resistance. Pull out test is desirable to check the values of pullout resistance which is useful in soil nail design.

3202.2 Drilled and grouted soil nails (or simply grouted nails), are approximately 75 mm to 200 mm diameter nail holes drilled in the soil mass to be retained, which shall be followed by placing of steel reinforcement bars (tendon) and the grouting of the drill hole.

3202.3 Driven soil nails are relatively small in diameter (20 mm to 25 mm) and are mechanically driven into the ground. They are usually spaced approximately 0.5 m to 1.0 m apart.

3203 CONSTRUCTION MATERIALS

Following covers the general materials required for the construction of typical soil nailing structure.

3203.1 Reinforcement Bar (Nail or Tendon)

The reinforcing element (tendon) shall be high strength steel reinforcing bar conforming to IS:1786 with a characteristic tensile strength of 415 MPa or higher which may be threaded at one end. Minimum recommended diameter of reinforcement bar (tendon) is 16 mm.

3203.2 Nail head

The nail head shall comprise of following main components: the bearing-plate, hex nut, and washers; and the headed-stud. The bearing plate with a central hole (with diameter greater than reinforcement bar) shall be of minimum Fe250 grade steel, typically square in shape with 200 to 250 mm side dimension and 19 mm thickness. Washers and nuts shall be made of steel with a grade consistent with that of the nail bar commonly of 415 MPa or higher. Nuts may be tightened with a hand-wrench. The headed-stud connection may consist of four headed studs welded near the four corners of the bearing plate to provide anchorage of the

nail head into the permanent facing. For temporary walls, the bearing plate shall be on the outside face of the shotcrete facing.

3203.3 Grout

Grout for soil nails is required to fill the annular space between the nail bar and the surrounding ground, and for shotcreting of the temporary facing. Grout for soil nail walls is commonly a neat cement grout with the water/cement ratio typically ranging from 0.4 to 0.5. Grout mix shall be prepared in accordance with IS:9012. Grout shall have a minimum 28 days characteristic strength of 20 MPa. For filling up nail holes, grout shall be pumped shortly after the nail bar is placed in the drillhole to reduce the potential for hole squeezing or caving. In solid nail bar applications, the grout may be injected by tremie methods through a grout pipe, which is previously inserted to the bottom of the drillhole, until the grout completely fills the drillhole.

3203.4 Centralizers

Centralizers are devices made of polyvinyl chloride (PVC) or other synthetic materials that are installed at various locations along the length of each nail bar to ensure that a minimum thickness of grout completely covers the nail bar. Centralizers shall be installed at regular intervals, typically not exceeding 2.5 m, along the length of the nail and at a distance of about 0.5 m from each end of the nail.

3204 FACING TYPES

Soil nail walls are generally provided with two types of facings: (a) temporary facing and (b) permanent facing.

3204.1 Temporary Facing

Temporary facing shall be constructed by providing reinforcement in the form of welded wire mesh (conforming to IS:1566) throughout the wall face, and by additional bearing plates (see **Clause 3203.2.**) and waler bars (rebars of smaller lengths placed in the vicinity of nail head) at the nail heads; which is, subsequently shotcreted in accordance with IS:9012. Overall temporary facing thickness shall vary from 75 mm to 200 mm.

3204.2 Permanent Facing

Permanent facing may be constructed as cast-in-place reinforced cement concrete conforming to IS:456, precast concrete or any suitable material to achieve desired strength and aesthetics. Reinforcement in the permanent facing may be adopted in the form of welded wire mesh or reinforcement bars in either direction. Permanent facing shall be connected to the temporary facing by means of headed-studs (usually four numbers per plate) welded on the bearing plates installed during construction temporary facing. Minimum thickness of permanent facing shall not be less than 200 mm.

3205 CONSTRUCTION SEQUENCE

3205.1 Typical sequence of construction of a soil nail wall shall be in accordance with following steps:

Step 1: Excavation of initial cut of 1.0 m to 2.0 m depending upon the capacity of in-situ soil to stand unsupported for about 12-24 hrs;

Step 2: Drilling hole for nail;

Step 3: Installation of nails followed by grouting and placing of drainage strip;

Step 4: Placing of construction facing and installation of bearing plates;

Step 5: Repetition of process till final level is reached; and

Step 6: Placing of final facing.

3206 GEOTECHNICAL ASPECTS

3206.1 Soil Investigation

For soil nail walls more than 30 m long, exploratory borings should be spaced between 30 to 60 m along the proposed centerline of the wall. For walls less than 30 m long, at least one boring is necessary along the proposed centerline of the wall. Borings are also necessary in front and behind the proposed wall. Borings behind the wall should be located within a distance up to 1 to 1.5 times the height of the wall behind the wall and should be spaced up to 45 m along the wall alignment. Borings in front of the wall should be located within a distance up to 0.75 times the wall height in front of the wall and should be spaced up to 60 m along the wall alignment. The depth of borings should extend at least one full wall height below the bottom of the excavation.

3206.2 Bond Strength

The bond strength is the mobilized shear resistance along the soil-grout interface. The bond strength adopted for the design of soil nails is commonly based on conservative estimates obtained from field correlation studies and local experience in similar conditions. Consequently, some percentage of the soil nails shall be load tested according to standard procedure (pullout tests) in the field to verify bond strength design.

3206.3 Suitable In-Situ Ground Conditions

Following are the in-situ conditions considered favorable for the prospective use of soil nailing technique.

a) Soil shall be able to stand unsupported to a depth of about 1 m – 2 m high vertical or nearly vertical cut for 12-24 hours.

b) Groundwater table shall be sufficiently below level of the lowermost soil nail at all cross-sections.

c) Favorable soils: Stiff to hard fine –grained soils, dense to very dense granular soils with some apparent cohesion, weathered rock with no weakness planes and glacial soils.

3207 ANALYSIS OF FAILURE MODES

3207.1 Analysis of various failure modes of soil nail structures shall be performed using allowable stress design methodology in accordance with IRC publication ***"Interim Guidelines for Soil Nailing Technique in Highway Engineering Applications"*** or any other state-of-art standard for analysis, design and construction of soil nail walls. For rigorous analyses, use of computational tools based on advanced numerical techniques such as finite element method, is strongly recommended.

3208 INITIAL DESIGN CONSIDERATIONS

3208.1 Wall layout

Establish the layout of the soil nail wall, including: (1) wall height; (2) length of the wall; (3) backslope; and (4) wall face batter. Wall face batter typically ranges from 0° to 10°. The evaluation of the wall layout also includes developing longitudinal profile of the wall, locating wall appurtenances (e.g., traffic barriers, utilities, and drainage systems), and establishing ROW limitations.

3208.2 Soil Nail Vertical and Horizontal Spacing

Typically, same nail spacing can be adopted in both horizontal S_h and vertical S_v directions. Nail spacing ranges from 1.25 to 2 m (commonly 1.5 m) for conventional drilled and grouted soil nails, and as low as 0.4 m for driven nails. As a general rule, soil nail spacing in horizontal and vertical direction must be such that each nail has an influence area $S_h \times S_v \leq 4m^2$.

3208.3 Soil Nail Pattern on Wall Face

The soil nail pattern on wall face may be adopted as one of the following: (1) square (or rectangular); (2) staggered in a triangular pattern; and (3) irregular (at limited locations) depending upon the ease of construction and site-specific constraints.

3208.4 Soil Nail Inclination

Soil nails are typically installed at an inclination ranging from 0 to 30 degrees from horizontal with a typical inclination of 10-25 degrees.

3208.5 Soil Nail Length and Distribution

The distribution of soil nail lengths in a soil nail wall can be selected as either uniform (i.e., only one nail length is used for the entire wall), or variable, where different nail lengths may be used for individual soil nail levels within a wall cross section. Uniform nail pattern is recommended for most applications.

3209 OTHER DESIGN CONSIDERATIONS

3209.1 Loads and Load Combinations

Soil nail walls used on typical highway projects are typically subjected to the following different loads during their service life: (i) Dead loads DL (e.g., weight of the soil nail wall system, lateral earth pressure, weight of a nearby above-ground structure); (ii) Live loads LL (e.g., traffic loads); (iii) impact loads IL (e.g., vehicle collision on barriers above soil nail wall); and (iv) earthquake loads EQ. Following load combinations are recommended to assess the most critical loading condition:

(a) DL + LL
(b) DL + LL + IL
(c) DL + EQ

For earthquake loads, allowable stresses shall be increased by 133 percent from the values obtained with factors of safety for static loads.

3209.2 Permissible Soil Nail Wall Deformations

The maximum permissible lateral deformation at the top of the soil nail walls constructed in weathered rock and stiff soils is 0.1%H; sandy soils is 0.2%H and for fine-grained soils is 0.3%H. Under no circumstances maximum permissible lateral deformation shall exceed 0.3%H, where: H is the vertical height of the soil nail wall. Permissible vertical deformation (i.e., settlement) shall be considered to be same as the permissible horizontal deformation.

3209.3 Drainage Measures

3209.3.1 Short Term Drainage Measures

Surface water and groundwater must be controlled both during and after construction of the soil nail wall. A surface water interceptor ditch, excavated along the crest of the excavation and lined with concrete, is a recommended element for controlling surface water flows. Additionally, if ground water impacts are temporary or localized, suitable dewatering measures may be taken for lowering the groundwater table:

3209.3.2 Long Term Drainage Measures

Long term drainage shall be provided by means of the drainage system comprising of: (i) vertical geo-composite drain strips placed suitably along the face of wall; (ii) weep holes in the form of perforated PVC pipes of typical diameter as 50-100 mm and 300- 600 mm length, placed through the face at the location of expected localised seepage; (iii) provision of horizontal or slightly inclined drain pipes of typical diameter 50 mm installed at the locations where it is necessary to control the groundwater pressures imposed on the retained soil mass; (iv) installation of permanent interception ditch behind the wall at its crest to prevent surface water runoff from infiltrating behind the wall or flowing over the wall edge; and (v) provision of a vegetative protective cap/cover to reduce or prevent water infiltration into the soil.

3209.4 Corrosion Protection

Corrosion potential of the soil must be evaluated for all permanent soil nail walls and, in some cases, for temporary walls.

Corrosion protection measures: (a) Specify a minimum grout cover of 25 mm between the reinforcement nail bar and the soil; (b) recommend epoxy coating of minimum thickness 0.4 mm on the nail bars shall be applied by the manufacturer prior to shipment of nails to the construction site, which is, subsequently to be encased in grout cover; and (c) adopt other site-specific suitable corrosion protection measures.

3210 FIELD PULLOUT TESTING

3210.1 Field pullout testing of soil nails shall be conducted (a) to verify that the nail design loads can be carried without excessive movements and with an adequate safety factor for the service life of the structure, and (b) to verify the adequacy of the contractor's drilling, installation, and grouting operations prior to and during construction of production soil nails.

3210.2 Types of Field Pullout Tests

Depending upon the type of test being performed, the maximum test load, the load increments, and the time that each load increment is held shall be determined. To prevent chances of explosive failure of the steel, in no case, the soil nail tendon be stressed to more than 80 percent of its minimum ultimate tensile strength for grade Fe415 steel, or more than 90 percent of the minimum yield strength for grade Fe500 steel.

3210.2.1 Verification Test

A verification test on soil nail is performed: (a) to determine the ultimate bond capacity (if carried to pullout failure); (b) verify the design bond factor of safety, and (c) to determine the soil nail load at which excessive creep occurs. Verification tests are generally conducted on non-production "sacrificial" nails as a **first order of work prior to construction.**

3210.2.2 Proof Test

A proof test is typically performed on a specified number of the total number of production soil nails installed. Typically, successful proof tests shall be performed on 5 percent of the production nails in each row or a minimum of 1 test per row. Proof tests provide information necessary to evaluate the ability of production soil nails to safely withstand design loads without excessive structural movement or long-term creep over the structure's service life.

3210.2.3 Creep Test

Creep tests are generally performed as part of a verification or proof test to ensure that nail design loads can be safely carried throughout the structure service life.

3211 MEASUREMENT FOR PAYMENT

Measurements for earthwork shall conform to IS:1200(Part I), concrete work shall conform to IS:1200(Part II) and steelworks shall conform to IS:1200(Part VIII). Measurement of facia shall be in sq. metres.

3212 RATES

Rates for labour, machinery and various structural components shall conform to the local schedule of rates in practice.

3213 REFERENCES

IS:1200(Part I)-1992 Method of Measurement of Building and Civil Engineering Works – EARTHWORK (Fourth Revision).

IS:1200(Part II)-1974 Method Of Measurement of Building and Civil Engineering Works – CONCRETE WORKS (Third Revision).

IS:1200(Part VIII)-1993 Method of Measurement of Building and Civil Engineering Works – STEELWORK AND IRONWORK (Fourth Revision).

IS:1566-1982 Specification for Hard-Drawn Steel Wire Fabric for Concrete Reinforcement (Second Revision Incorporating Amendments Nos. 1, 2 and 3).

IS:1786-1985 Specification for High Strength Deformed Steel Bars and Wires for Concrete Reinforcement (Third Revision).

IS:456-2000 Plain and Reinforced Concrete – Code of Practice (Fourth Revision).

Is:9012-1978 Recommended Practice for Shotcreting (Fourth Reprint).

IRC publication "Interim Guidelines for Soil Nailing Technique in Highway Engineering Applications" (to be published).

APPENDICES

Appendices

Appendix-1

(Refer Clause 101)

LIST OF IRC PUBLICATIONS REFERRED TO IN THE SPECIFICATIONS

Number Designation	Title
	(A) INDIAN ROADS CONGRESS
IRC:5-1998	Standard Specifications and Code of Practice for Road Bridges, Section I – General Features of Design (Seventh Revision)
IRC:8-1980	Type Designs for Highway Kilometre Stones (Second Revision)
IRC:15-2011	Standard Specification and Code of Practice for Construction of Concrete Roads (Fourth Revision)
IRC:25-1967	Type Designs for Boundary Stones
IRC:26-1967	Type Designs for 200–Metre Stones
IRC:27-2009	Specifications for Bituminous Macadam (First Revision)
IRC:35-1997	Code of Practice for Road Markings (First Revision)
IRC:38-1988	Guidelines for Design of Horizontal Curves for Highways and Design Tables (First Revision)
IRC:44-2008	Tentative Guidelines for Cement Concrete Mix Design for Pavements (Second Revision)
IRC:57-2006	Recommended Practice for Sealing of Joints in Concrete Pavements (First Revision)
IRC:67-2012	Code of Practice for Road Signs (Third Revision)
IRC:75-1979	Guidelines for the Design of High Embankments
IRC:76-1979	Tentative Guidelines for Structural Strength Evaluation of Rigid Airfield Pavement
IRC:78-2000	Standard Specifications and Code of Practice for Road Bridges, Section VII - Foundations & Sub-structure (Second Revision)
IRC:79-1981	Recommended Practice for Road Delineators
IRC:81-1997	Guidelines for Strengthening of Flexible Road Pavements Using Benkelman Beam Deflection Technique (First Revision)
IRC:83-1999(Part-I)	Standard Specifications and Code of Practice for Road Bridges, Section IX – Bearings, Part I : Metallic Bearings (First Revision)
IRC:83-1999 (Part-II)	Standard Specifications and Code of Practice for Road Bridges, Section IX - Bearings, Part II: Elastomeric Bearings

IRC:83-2002 (Part-III)	Standard Specifications and Code of Practice for Road Bridges, Section IX - Bearings, Part III: POT, POT-CUM-PITE, PIN AND METALLIC GUIDE BEARINGS
IRC:87-2011	Guidelines for Formwork, False Work and Temporary Structures (First Revision)
IRC:89-1997	Guidelines for Design and Construction of River Training & Control Works for Road Bridges (First Revision)
IRC:93-1985	Guidelines on Design and Installation of Road Traffic Signals
IRC:112-2011	Code of Practice for Concrete Road Bridges
IRC:SP:16-2004	Guidelines for Surface Evenness of Highway Pavements (First Revision)
IRC:SP:20-2002	Rural Roads Manual
IRC:SP:34-1989	General Guidelines About the Equipment for Bituminous Surface Dressing
IRC:SP:42-1994	Guidelines on Road Drainage
IRC:SP:46-1997	Steel Fibre Reinforced Concrete for Pavements
IRC:SP:47-1998	Guidelines on Quality Systems for Road Bridges (Plain, Reinforced, Prestressed and Composite Concrete)
IRC:SP:48-1998	Hill Road Manual
IRC:SP:49-1998	Guidelines for the Use of Dry Lean Concrete as Sub-base for Rigid Pavement
IRC:SP:53-2002	Guidelines on Use of Modified Bitumen in Road Construction (Second Revision)
IRC:SP:55-2001	Guidelines for Safety in Construction Zones
IRC:SP:57-2000	Guidelines for Quality Systems for Road Construction
IRC:SP:74-2007	Guidelines for Repair and Rehabilitation of Steel Bridges
IRC:SP:76-2008	Tentative Guidelines for Conventional, Thin and Ultra-Thin Whitetopping
IRC:SP:79-2008	Tentative Specifications for Stone Matrix Asphalt
IRC:SP:80-2008	Guidelines for Corrosion Prevention, Monitoring and Remedial Measures for Concrete Bridge Structures
IRC:SP:81-2008	Tentative Specification for Slurry Seal and Microsurfacing
IRC:SP:83-2008	Guidelines for Maintenance, Repairs & Rehabilitation of Cement Concrete Pavements

Appendix-2

(Refer Clause 103)

LIST OF INDIAN AND FOREIGN STANDARDS REFERRED TO IN THE SPECIFICATIONS

Number Designation	Title
	(A) INDIAN STANDARDS
IS:73-1992	Paving Bitumen Specification (Second Revision)
IS:77-1976	Specification for Linseed Oil;, Boiled, for Paints(Second Revision)
IS:102-1962	Ready Mixed Paint, Brushing, Red Lead, Non Setting, Primming
IS:104-1979	Ready Mixed Paint, Brushing, Zinc Chrome, Primming (Second Revision)
IS:123-1962	Specification for Ready Mixed Paint, Brushing, Finishing, Semi-Gloss. For General Purposes, to Indian Standard Colours (Revised Revision)
IS:164-1981	Specification for Ready Mixed Paints for road marking (First Revision)
IS:217-1988	Specification for Cutback Bitumen (Second Revision)
IS:226-1975	Structural Steel (Standard Quality) (Fifth Revision)
IS:269-1989	Specification for 33 Grade Ordinary Portland Cement (Fourth Revision)
IS:278-2009	Galvanized Steel Barbed Wire for Fencing-Specification
IS:280-2006	Mild Steel Wire for General Engineering Purposes (Fourth Revision)
IS:345-1952	Wood Filter Transparent Liquid
IS:356-1991	Ester Gum (Second Revision)
IS:383-1970	Specification for Coarse and Fine aggregates from Natural Sources for Concrete (Second Revision)
IS:460-1985 (Part 3)	Specification for Test Sieves: Part III Methods of Examination of Apertures of Test Sieves (Third Revision)
IS:503-1963	Alloy Austenitic Manganese Steel Castings
IS:516-1959	Methods of Test for Strength of Concrete
IS:712-1984	Specifications for Building Limes(Third Revision)
IS:736-1986	Wrought Aluminum and Aluminum Alloys, Plates for General Engineering Purposes (Fourth Revision)

IS:783-1985	Code of Practice for Laying of Concrete Pipes (First Revision)
IS:784-2001	Prestressed Concrete Pipes (Including Fittings) – Specifications (Second Revision)
IS:814-2004	Covered Electrodes for Manual Metal Arc Welding of Carbon and Carbon Manganese Steel (Fifth Revision)
IS:816-1969	Code of Practice for Use of Metal Arc Welding for General Construction in Mild Steel (First Revision)
IS:817-1966	Code of Practice for Training and Testing of Metal Arc Welders (Revised Revision)
IS:822-1970	Code of Procedure for Inspection of Welds
IS:877-1989	Methods of Sampling and Test for Activated Carbons, Powered and Granular (Second Revision)
IS:919-1993(Part-1)	ISO Systems of Limits and Fits Part 1 Bases of Tolerance, Deviation and Fits (Second Revision)
IS:919-1993(Part-2)	ISO Systems of Limits and Fits Part 2 Tables of Standard Tolerance Grades and Limit Deviations for Holes and Shafts (First Revision)
IS:961-1975	Structural Steel (High Tensile) (Second Revision)
IS:1077-1992	Common Burnt Clay Building Bricks (Fifth Revision)
IS:1079-1994	Hot Rolled Carbon Steel Sheets and Strips-Specifications (Sixth Revision)
IS:1124-1974	Method of Test for Water Absorption, Apparent Specific Gravity and Porosity of Natural Building Stones (First Revision)
IS:1129-1972	Recommendation for Dressing of Natural Building Stones (First Revision)
IS:1148-1982	Hot Rolled Rivet Bars(upto 40 mm dia) for Structural Purposes (Third Revision)
IS:1149-1982	Hot Tensile Steel Rivet Bars for Structural Purposes (Third Revision)
IS:1182-1983	Recommended Practice for Radiographic Examination of Fusion Welded Butt Joints in Steel Plates(Second Revision)
IS:1199-1959	Method of Sampling and Analysis of Concrete
IS:1203-1978	Determination of Penetration
IS:1205-1978	Determination of Softening Point
IS:1212-1978	Determination of Loss on Heating
IS:1216-1978	Determination of Solubility in Carbon Disulphide Trichlorothylene

IS:1217-1978	Determination of Mineral Matter
IS:1239:(Part 1)-1990	Steel Tubes, Tubulars and Other Wrought Steel Fittings-Specification: Part 1 Steel Tubes
IS:1363-2002 (Part 1,2 & 3)	Hexagonal Head Bolts, Screws and Nuts of Product Grade 'C'
IS:1364-2002 (Part 1,2 &3)	Hexagonal Head Bolts, Screws and Nuts of Product Grade 'A' & 'B'
IS:1365-2005	Slotted Countersunk, Flat Head Screws (Common Head Style)-Product Grade A (Fourth Revision)
IS:1367-1997	Technical supply conditions for Threaded Steel Fasteners
IS:1393-1961	Code of Practice for Training and Testing of Oxy Acetylene Welders
IS:1477-1971 (Parts 1 & 2)	Code of Practice for Painting of Ferrous Metals in Buildings
IS:1489-1991	Specification for Portland pozzolana Cement(Third Revision)
(Part 1)	Flyash Based (Third Revision)
(Part 2)	Calcined Clay Based (Third Revision)
IS:1498-1970	Classification and Identification of Soils for General Engineering Purposes (First Revision)
IS:1514-1990	Methods of Sampling and Test for Quick Lime and Hydrated Lime (First Revision)
IS:1597-1992 (Part 1)	Construction of Stone Masonry - Code of Practice - Part 1 - Rubble Stone Masonry (First Revision)
IS:1732-1989	Dimensions for Round and Square Steel Bars for Structural and General Engineering Purposes (Second Revision)
IS:1745-1978	Specification for Petroleum Hydrocarbon Solvent(Second Revision)
IS:1785-1983(Part-1)	Specification for Plain, Hard Drawn Steel Wire for Prestressed Concrete:Part 1 Cold Drawn Stress Relieved Wire(Second Revision)
IS:1785-1983(Part-II)	Specification for Plain, Hard Drawn Steel Wire for Prestressed Concrete:Part 2 As Drawn Wire(First Revision)
IS:1786-1985	High Strength Deformed Steel Bars and Wires for Concrete Reinforcement (Third Revision)
IS:1834-1984	Specification for Hot Applied Sealing Compounds for Joints in Concrete (First Revision)
IS:1838-1983(Part 1)	Specification for Preformed Filler for Expansion Joint in Concrete Pavement and Structures (Non-Extruding and Resilient Type):Part 1 Bitumen Impregnated Fibre (First Revision)

IS:1838-1984(Part 2)	Specification for Preformed Filler for Expansion Joint in Concrete Pavement and Structures (Non-Extruding and Resilient Type):Part 2 CNSL Aldehyde Resin and Coconut Pith
IS:1852-1985	Rolling and Cutting Tolerances for Hot Rolled Steel Products(Fourth Revision)
IS:1875-1992	Carbon Steel Billets, Blooms, Slabs and Bars for Forgings (Fifth Revision)
IS:1888-1982	Method of Load Test on Soils(Second Revision)
IS:1892-1979	Code of Practice for Sub Surface Investigation for Foundations (First Revision)
IS:1966-2003	Laboratory Glassware-Straight Bore Glass Stopcocks for General Purposes(First Revision)
IS:1977-1996	Low Tensile Structural Steels –Specifications(Third Revision)
IS:1995-1984	Overall Internal Heights for Lathe Tool Posts (First Revision)
IS:2004-1991	Carbon Steel Forgings for General Engineering Purposes (Third Revision)
IS:2016-1967	Specification for Plain Washers (First Revision)
IS:2062-2006	Hot Rolled Low, Medium and High Tensile Structural Steel (Sixth Revision)
IS:2090-1983	Specifications for High Tensile Steel Bars used in Prestressed Concrete(First Revision)
IS:2116-1980	Specification for Sand for Masonry Mortars (First Revision)
IS:2131-1981	Method for Standard Penetration Test for Soils (First Revision)
IS:2132-1986	Code of Practice for Thin Walled Tube Sampling of Soils (Second Revision)
IS:2185-2005(Part-1)	Concrete Masonry Units-Specification: Part 1-Hollow and Soild Concrete Blocks
IS:2250-1981	Code of Practice for Preparation and Use of Masonry Mortars (First Revision)
IS:2269-2006	Hexagon Socket Head Cap Screws (Fifth Revision)
IS:2339-1963	Aluminum Paint for General Purposes in Dual Container
IS:2386-1963	Methods of Test for Aggregates for Concrete
(Part 1)	Particle size and shape
(Part 2)	Estimation of Deleterious Materials and Organic Impurities
(Part 3)	Specific Gravity, Density, Voids, Absorption and Bulking

(Part 4)	Mechanical Properties
(Part 5)	Soundness
(Part 6)	Measuring Mortar Making Properties of Fine Aggregates
(Part 7)	Alkali Aggregate Reactivity Test
(Part 8)	Petrographic examination
IS:2502-1963	Code of Practice for Bending and Fixing of Bars for Concrete Reinforcement
IS:2506-1985	General Requirements for Screed Board Concrete Vibrators(First Revision)
IS:2514-1963	Specification for Concrete Vibrating Tables
IS:2720	Methods of Test for Soils
(Part 1)-1983	Preparation of Dry Soil Samples for Various Tests (Second Revision)
(Part 2)-1973	Determination of Water Content (Second Revision)
(Part 4)-1985	Grain Size Analysis (Second Revision)
(Part 5)-1985	Determination of Liquid and Plastic Limits (Second Revision)
(Part 8)-1983	Determination of Water Content Dry Density Relation using Heavy Compaction (Second Revision)
(Part 16)-1987	Laboratory Determination of CBR
(Part 27)-1977	Determination of Total Soluble Sulphates(First Revision)
(Part 28)-1974	Determination of Dry Density of Soils in-place by the Sand Replacement Method(First Revision)
(Part-37)-1976	Determination of Sand Equivalent Values of Soils and Fine Aggregates
(Part 40)-1977	Determination of Free Swell Index of Soils
IS:2751-1979	Code of Practice for Welding of Mild Steel Plain and Deformed Bars for Reinforced Concrete Construction (First Revision)
IS:2911 (Part-1) (Sec-3) -1979	Code of Practice for Design and Construction of Pile Foundations Concrete Piles, Section 3 Driven Precast Concrete
IS: 2925-1984	Specification for Industrial Safety Helmets (Second Revision)
IS:3025:(Part 17)-1984	Methods of Sampling and Test (Physical And Chemical) for Water and Waste water: Part 17 Non-Filterable Residue (Total Suspected Solids) (First Revision)

IS:3025:(Part 18)-1984	Methods of Sampling and Test (Physical and Chemical) for Water and Waste Water- Part 18 Volatile and Fixed Residue (Total Filterable and Non-Filterable) (First Revision)
IS:3025:(Part 22)-1986	Methods of Sampling and Test (Physical and Chemical) for Water and Waste Water- Part 22 : Acidity (First Revision)
IS:3025:(Part 23)-1986	Methods of Sampling and Test (Physical and Chemical) for Water and Waste Water- Part 23: Alkalinity (First Revision)
IS:3025:(Part 28)-1984	Methods of Sampling and Test (Physical and Chemical) for Water and Waste Water- Part 28: Sulphite (First Revision)
IS:3025 (Part 32)-1988	Methods of Sampling and Test (Physical and Chemical) for Water and Waste Water- Part 32: Chloride (First Revision)
IS:3073-1967	Assessment of Surface Roughness
IS:3138-1966	Specifications for Hexagonal Bolts and Nuts
IS:3400 (Part 3)-2004	Methods of Test for Vulcanized Rubbers: Part 3 Abrasion Resistance Using a Rotating Cylindrical Drum Device (First Revision)
IS:3400 (Part 2)-2004	Methods of Test for Vulcanized Rubbers: Part 2 Rubber Vulcanized or Thermoplastic-Determination of Hardness (Hardness between 10 IRHD and 100 IRHD) (Third Revision)
IS:3400 (Part 4)-2004	Methods of Test for Vulcanized Rubbers: Part 4 Accelerated Ageing (Second Revision)
IS:3400 (Part 10)-2004	Methods of Test for Vulcanized Rubbers: Part 10 Compression Set at Constant Strain (First Revision)
IS:3400 (Part 14)-1984	Methods of Test for Vulcanized Rubbers: Part 14 Adhesion of Rubber to Metal (First Revision)
IS:3400 (Part 20)-2004	Methods of Test for Vulcanized Rubbers: Part 20 Resistance to Ozone Cracking-Static Strain Test (First Revision)
IS:3589-2001	Steel Pipes for Water and Sewage (168.3 to 2540 mm Outside Diameter)-Specification (Third Revision)
IS:3613-1974	Acceptance Tests for Wire Flux Combination for Submerged Arc Welding (First Revision)
IS:3658-1999	Code of Practice for Liquid Penetrant Flaw Detection (Second Revision)
IS:3764-1992	Code of Safety for Excavation Work (First Revision)
IS:3784-1994	Textiles –Cloth, Cotton Khadi Bleached for General Purposes-Specification (First Revision)
IS:3812:1981	Specification for Fly Ash for Use as Pozzolana and Admixture (First Revision)

IS:4031:(Part 5)-1988	Methods of Physical Tests for Hydraulic Cement: Part 5 Determination of Initial and Final Setting Times (First Revision)
IS:4078-1980	Code of Practice for Indexing and Storage of Drill Cores (First Revision)
IS:4081-1986	Safety Code for Blasting and Related Driling Operations (First Revision)
IS:4138-1977	Safety Code for Working in Compressed Air (First Revision)
IS:4260-1986	Recommended Practice for Ultrasonic Testing of Butt Welds in Ferritic Steel (Second Revision)
IS:4434-1978	Code of Practice for In-Situ Vane Shear Test for Soils (First Revision)
IS:4453-2009	Subsurface Exploration by Pits, Trenches, Drifts and Shafts-Code of Practice (Second Revision)
IS:4656-1968	Specification for Form Vibrators for Concrete
IS:4826-1979	Hot Dipped Galvanised Coating on Round Steel Wires (First Revision)
IS:4853-1982	Recommended Practice for Radiographic Inspection of Fusion Welded Butt Joints in Steel Pipes (First Revision)
IS:4923-1997	Hollow Steel Sections for Structural Use(Second Revision)
IS:4925-2004	Concrete Batching and Mixing Plant-Specification (First Revision)
IS:4926-2003	Ready Mixed Concrete – Code of Practice(Second Revision)
IS:4968-1976 (Part-1,2 &3)	Method for Subsurface Sounding for Soils
IS:4984-1995	Specification for High Density Polyethylene Pipes for Potable Water Supplies (Fourth Revision)
IS:5334-2003	Magnetic Particle Flaw Detection of Welds-Code of Practice (Second Revision)
IS:5435-1987	General Requirements For Cold Bituminous Macadam Mixing Plants (First Revision)
IS:5640-1970	Method for Determining the Aggregate Impact Value of Soft Coarse Aggregate
IS:6003-1983	Specification for indented Wire for Prestressed Concrete (First Revision)
IS:6006-1983	Specification for Uncoated Stress Relieved Strand for Prestressed Concrete (First Revision)

IS:6241-1971	Methods of test for Determination of Stripping Value of Road Aggregates
IS:6603-2001	Stainless Steel Bars and Flats - Specification (First Revision)
IS:6610-1972	Specification for Heavy Washers for Steel Structures
IS:6639-1972	Specification for Hexagonal Bolts for Steel Structures
IS:6761-1994	Fasteners-Countersunk Head Screws with Hexagonal Socket-Specification (First Revision)
IS:6909-1990	Specification for Supersulphated cement
IS:6911-1992	Stainless Steel Plate, Sheet and Strip (First Revision)
IS:6925-1973	Methods of Test for Determination of Water in Concrete Admixtures
IS:7205-1974	Safety Code for Erection of Structural Steelwork
IS:7269-1974	Numbering of Aircraft Engines, Engine Cylinders, Combustion Chambers and Direction of Rotation of Engines and Propellers
IS:7273-1974	Method of Testing Fusion Welded Joints in Aluminium and Aluminium Alloys
IS:7292-1974	Code of Practice for In-Situ Determination of Rock Properties by Flat Jack
IS:7293-1974	Safety Code for Working with Construction Machinery
IS:7307 (Part 1)-1974	Approval Tests for Welding Procedures Part-1 Fusion Welding of Steel
IS:7308-1999	Non Coniferous Logs-Specification (First Revision)
IS:7310(Part-1)-1974	Approval Tests for Welders Working to Approved Welding Procedures-Part1: Fusion Welding of Steel
IS:7317-1993	Code of Practice for Uniaxial Jacking Test for Deformation Modulus of Frock (First Revision)
IS:7573-1975	Hockey Shoes
IS:7746-1991	Code of Practice for In-Situ Shear Test on Rock (First Revision)
IS:7966-1976	Specification for Dental Modelling Wax
IS:8500-1991	Structural Steel- Microalloyed (Medium and High Strength Qualities)-Specification
IS:8812-1978 (Part1)	Methods for Chemical Analysis of Hard Solders for Jointing Aluminium and Aluminium Alloys Part 1 Determination of Silver, Copper, Zinc, Antimony, Iron and Bismuth
IS:8812-1982 (Part2)	Methods for Chemical Analysis of Hard Solders for Jointing Aluminium and Aluminium Alloys Part 2 Determination of Aluminium

IS:9000-2005	Quality Management Systems-Fundamentals and Vocabulary (Third Revision)
IS:9012-1978	Recommended Practice for Shotcreting
IS:9437-2008	Specification for Fixed Precision Resistors
IS:9565-1995	Acceptance Standards for Ultrasonic Inspection of Steel Castings (Second Revision)
IS:9595-1996	Metal Arc Welding of Carbon and Carbon Manganese Steels –Recommendations (First Revision)
IS:9862-1981	Ready Mixed Paint, Brushing, Bituminous, Black, Lead Free, Acid, Alkali, Water and Chlorine Resisting
IS:10433(Part 1)-1983	Specification for Male Stud Tee Body (Stud Run) for Oil –Hydraulic Coupling- Part-1: Made form Forging
IS:11587-1986	Structural Weather Resistant Steels
IS:12063-1987	Classification of Degrees of Protection provided by Enclosures of Electrical Equipment
IS:12089-1987	Specification for Granulated Slag for Manufacture of Portland Slag Cement
IS:12119-1987	General Requirements for Pan Mixers for Concrete
1S:12269-1987	Specification for 53 Grade Ordinary Portland Cement
IS:12330-1988	Specification for Sulphate Resisting Portland Cement
IS:12594-1988	Hot Dip Zinc Coating on Structural Steel Bars for Concrete Reinforcement-Specification
IS:13162(Part-4)-1992	Geotextiles- Methods of Test-Part 4: Determination of Puncture Resistance by Falling Cone Method
IS:13162(Part-5)-1992	Geotextiles- Methods of Test-Part 5: Determination of Tensile Properties using a Wide Width Strip
IS:13360-1992	Plastics-Methods of Testing
IS:13620-1993	Fusion Boned Epoxy Coated Reinforcing Bars-Specification
IS:13757-1993	Burnt Clay Fly Ash Building Bricks- Specifications
IS:13759-1993	Polyurethane Primer Zinc Phosphate (Two Pack) for Exterior Painting of Railway Coaches
IS:14293-1995	Geotextiles- Method of Test for Trapezoid Tearing Strength
IS:14294-1995	Geotextiles-Method for Determination of Apparent Opening Size by Dry Sieving Technique

IS:14324-1995	Geotextiles –Methods of Test for Determination of Water Permeability-Permimittivity
IS:14589-1999	Zinc Priming Paint, Epoxy Based Two Pack-Specification
IS:14700 (Part 6 Sec 3)	Electromagnetic Compatibility (EMC)- Part 6 Generic Standards-Sec 3: Emission Standards for Residential, Commercial and Light Industrial Environments
IS:14925-2001	Epoxy Resin for Paints-Specification
IS:15284 (Part 1)-2003	Design and Construction for Ground Improvement-Guidelines: Part 1 Stone Columns
(Part 2)-2004	Design and Construction for Ground Improvement-Guidelines: Part 2 Preconsolidation using Vertical Drains
IS:15388-2003	Silica Fume-Specification
IS:15462-2004	Polymer and Rubber Modified Bitumen-Specification
IS:15809-2008	High Visibility Warning Clothes-Specification
IS:SP:23-1982	Handbook on Concrete Mixes (Based on Indian Standards)

(B) FOREIGN STANDARDS

ASTM E8	Standard Test Methods for Tension Testing of Metallic Materials
ASTM:E-11	Standard Specification for Woven Wire Test Sieve Cloth and Test Sieves
ASTM 36	Standard Specification for Carbon Structural Steel
ASTM:D-297	Standard Test Methods for Rubber Products-Chemical Analysis
ASTM-C 309-81,	Standard Practice Standard Specification for Architectural Flat Glass Clad Polycarbonate
ASTM 393	Standard Test Method for Core Shear Properties of Sandwich Constructions by Beam Flexure
ASTM- D:412	Standard Test Methods for Vulcanized Rubber and Thermoplastic Elastomers—Tension
ASTM-D: 471	Standard Test Method for Rubber Property-Effect of Liquids
ASTM-D:573	Standard Test Method for Rubber-Deterioration in an Air Oven
ASTM 711	Standard Specification for Steel Forging Stock
ASTM 732	Standard Specification for Castings, Investment, Carbon and Low Alloy Steel for General Application, and Cobalt Alloy for High Strength at Elevated Temperatures

ASTM 788	Standard Specification for Steel Forgings, General Requirements
ASTM E-809	Standard Practice for Measuring Photometric Characteristics of Retro-reflectors
ASTM E 810	Standard Test Method for Coefficient of Retro-reflection of Retro-reflective Sheeting Utilizing the Coplanar Geometry
ASTM D-903	Standard Test Method for Peel or Stripping Strength of Adhesive Bonds
ASTM 968	Standard Test Methods for Abrasion Resistance of Organic Coatings by Falling Abrasive
ASTM-D:1149	Standard Test Methods for Rubber Deterioration—Cracking in an Ozone Controlled Environment
ASTM 1264	Standard Classification for Acoustical Ceiling Products
ASTM 1475	Standard Test Method For Density of Liquid Coatings, Inks, and lelated Products
ASTM D-1505	Standard Test Method for Density of Plastics by the Density-Gradient Technique
ASTM F1553-06	Standard Guide for Specifying Chain Link Fence
ASTM 1644	Standard Test Methods for Non-volatile Content of Varnishes
ASTM F1647-11	Standard Test Methods for Organic Matter Content of Athletic Field Rootzone Mixes
ASTM D-1693	Standard Test Method for Environmental Stress-Cracking of Ethylene Plastics
ASTM D: 2041	Standard Test Method for Theoretical Maximum Specific Gravity and Density of Bituminous Paving Mixtures
ASTM 2172	Standard Test Methods for Quantitative Extraction of Bitumen From Bituminous Paving Mixtures
ASTM-D:2240	Standard Test Method for Rubber Property-Durometer Hardness
ASTM-D:2628	Standard Specification for Preformed Polychloroprene Elastomeric Joint Seals for Concrete Pavements.
ASTM D-2990	Standard Test Methods for Tensile, Compressive, and Flexural Creep and Creep-Rupture of Plastics
ASTM D-3776	Standard Test Methods for Mass Per Unit Area (Weight) of Fabric
ASTM D 3786	Standard Test Method for Bursting Strength of Textile Fabrics-Diaphragm Bursting Strength Tester Method
ASTM D 4060	Standard Test Method for Abrasion Resistance of Organic Coatings by the Taber Abraser

ASTM 4280	Standard Specification for Extended Life Type, Non-plowable, Raised Retro-reflective Pavement Markers
ASTM D 4491	Standard Test Methods for Water Permeability of Geotextiles by Permittivity
ASTM D 4533	Standard Test Method for Trapezoid Tearing Strength of Geotextiles
ASTM D-4595	Standard Test Method for Tensile Properties of Geotextiles by the Wide-Width Strip Method
ASTM D: 4632	Standard Test Method for Grab Breaking Load and Elongation of Geotextiles
ASTM D-4716	Standard Test Method for Determining the (In-plane) Flow Rate per Unit Width and Hydraulic Transmissivity of a Geosynthetic Using a Constant Head
ASTM D-4751	Standard Test Method for Determining Apparent Opening Size of a Geotextile
ASTM D:4873	Standard Guide for Identification, Storage, and Handling of Geosynthetic Rolls and Samples
ASTM D-4956	Standard Specification for Retro-reflective Sheeting for Traffic Control
ASTM D- 5035	Standard Test Method for Breaking Force and Elongation of Textile Fabrics (Strip Method)
ASTM 5199	Standard Test Method for Measuring the Nominal Thickness of Geosynthetics
ASTM D-5261	Standard Test Method for Measuring Mass per Unit Area of Geotextiles
ASTM D:5581	Standard Test Method for Resistance to Plastic Flow of Bituminous Mixtures Using Marshall Apparatus (6 inch-Diameter Specimen)
ASTM-C:5893-04	Specification for Cold Applied, Single Component
ASTM D 6241	Standard Test Method for the Static Puncture Strength of Geotextiles and Geotextile-Related Products using a 50-mm Probe
ASTM 6390	Standard Test Method for Determination of Draindown Characteristics in Uncompacted Asphalt Mixtures
ASTM D 6637	Standard Test Method for Determining Tensile Properties of Geogrids by the Single or Multi-Rib Tensile Method
ASTM D-6525	Standard Test Method for Measuring Nominal Thickness of Rolled Erosion Control Products
AASHTO M P8	Standard Specification for Designing Stone Matrix Asphalt (SMA)

AASHTO PP41	Standard Practice for Designing Stone Matrix Asphalt (SMA)
AASHTO T 245	Standard Method of Test for Resistance to Plastic Flow of Bituminous Mixtures using Marshall Apparatus
AASHTO M-249	Specifications (White & Yellow Reflective Thermo-Solid Form)
AASHTO T 283	Standard Method of Test for Resistance of Compacted Hot Mix Asphalt (HMA) to Moisture-Induced Damage
BS EN 169:2002.	Personal Eye-Protection Filters for welding and related Techniques. Transmittance Requirements and Recommended Use
BS EN ISO 175:2010	Plastics. Methods of Test for the Determination of the Effects of Immersion in Liquid Chemicals
BS EN 397:2012	Industrial Safety Helmets
BS EN 471:2003	High-Visibility Warning Clothing for Professional Use-Test methods and requirements
BS:812-1975 Part-114	Testing aggregates method for determination of the polished stone value
BS 873-4:1973	Specification for the Construction of Road Traffic Signs and Internally Illuminated Bollards & Road Studs
BS:1047	Specification for Air-cooled Blast Furnace Slag Aggregate for Use in Construction
BS:1377	Methods of Test for Soils for Civil Engineering Purposes
BS 1449-2:1983	Specification for Stainless and Heat-Resisting Steel Plate, Sheet and Strip
BS EN ISO 3262-12:2001	Extenders for Paints.Specifications and Methods of Test. Muscovite-Type Mica
BS 4482	Specification for Cold Reduced Steel Wire for the Reinforcement of Concrete
BS 4483	Specification for Steel Fabric for the Reinforcement of Concrete.
BS:5212	Specification for Cold Poured Joint Sealants for Concrete Pavements
BS 6088:1981	Specification for Solid Glass Beads for Use with Road Marking Compounds and for other Industrial Uses
BS:7542	Method of Test for Curing Compounds for Concrete
BS EN ISO 9863-1:2005	Geosynthetics. Determination of Thickness at Specified Pressures. Single Layers
BS EN ISO 9864:2005	Geosynthetics. Test Method for the Determination of Mass per Unit Area of Geotextiles and Geotextile-Related Products

BS EN ISO 10319:2008	Geosynthetics. Wide-width Tensile Test
BS EN ISO 12236:2006	Geosynthetics. Static Puncture Test (CBR Test)
BS EN ISO 12966-2:2011	Animal and Vegetable Fats and Oils.Gas Chromatography of Fatty Acid Methyl Esters. Preparation of Methyl Esters of Fatty Acids
BS EN ISO 12958:2010	Geotextiles and Geotextile-related products. Determination of Water Flow Capacity in their Plane
BS EN 13422:2004	Vertical Road Signs.Portable Deformable Warning Devices and Delineators.Portable Road Traffic Signs. Cones and Cylinders
BS EN 50128:2011	Railway Applications. Communication, Signalling and Processing Systems. Software for Railway Control and Protection Systems

Appendix 3

(Refer Clause 402.3.2 and 403.3.2)

METHOD OF SIEVING FOR WET SOILS TO DETERMINE THE DEGREE OF PULVERISATION

1. A sample of pulverised soil approximately 1kg in weight should be taken and weighed (W_1).
2. It should be spread on the sieve and shaken gently, care being taken to break the lumps of soils as little as possible. Weight of soil retained on the sieve should be recorded (W_2). Lumps of finer soils in the retained material should be broken until all the individual particulars finer than the aperture size of the sieve are separated.
3. The soil should again be placed on the sieve and shaken until sieving is complete. The retained material should be weighed (W_3).
4. Weight of soil by percent passing the sieve can than be calculated from expression:

$$\frac{(W_1 - W_2) \times 100}{(W_1 - W_3)}$$

Appendix 4

(Refer Clause 509.2.4)

Anti-Stripping Agents Used for Bituminous Materials and Mixes

1 Scope

1.1 Anti-stripping agents are used for bituminous materials and mixes to ensure adhesion between aggregates (hydrophilic in nature) and bitumen, even under submergence in water. Prior approval of the Engineer shall be taken in respect of both qualitative and quantitative use of a particular product.

2 Materials

2.1 The anti-stripping agents shall be fatty acid amines having a long hydrocarbon chain.

2.2 **Physical and Chemical Requirements:** The anti-stripping agents shall conform to the physical and chemical requirements as detailed in Table A4-1.

2.3 **Storage and Handling:** Anti-stripping agents shall be properly stored in closed containers made of steel or aluminium. Containers made of zinc, copper, polythene PVC and most types of rubber are not suitable for use. As most of the anti-stripping agents cause irritation when in contact with human skin and are also irritating to the eyes, protective gloves for hands and goggles for the eyes shall be used while handling them, specially in case of liquid anti-stripping agents.

3 Use in Sprayed Work

3.1 **Additive Dosage:** The dosage shall be determined depending on the nature (stripping value) of the aggregate and the size of aggregate. While the recommended minimum dose of anti-stripping agent for sprayed work is given in Table A4-2, the actual dosage shall be determined in the laboratory as directed by the Engineer.

3.2 **Mixing Procedure During Construction:** The anti-stripping agent supplied in liquid, solid or concentrate form shall be thoroughly mixed with liquid bituminous material or with straight run bitumen. When used with straight run bitumen, the correct dose of antistripping agent shall be mixed in a hot bitumen tank boiler.

The two constituents shall be agitated till the ani-stripping agent is thoroughly mixed. The dose of anti-stripping agent shall suitable be increased if the binder is to remain in bitumen boiler for a longer period.

4 Use in Premix Work

4.1 **Additive Dosage:** The dosage shall be determined depending on the nature (stripping value) of the aggregate and the percent voids in the mix. While the recommended minimum doses for different types of bituminous premix materials in terms of voids content are given in Table A4-3, the actual dosage shall be determined in the laboratory as directed by the Engineer.

Table A4-1 Specification for Antistripping Compound

S.No.	Test	Method	Limit
1.	Appearance	Visual	Liquid/Solid
2.	Odour	Smelling	Agreeable
3.	Specific gravity 27°C	IS:1202-1978	0.860-1.03
4.	Pour point °C Maximum	IS:1448	42
5.	Flash Point °(COC) Minimum	IS:1448	150
6.	Water Content percent Vol. Maximum	IS:1448	1.0
7.	Solubility in diesel oil (HDO or LDO) in the ratio of 2:98 at 50°C	As given at the end of Appendix	Complete
8.	Total base value mg KOH/g minimum	ASTM D 664	200
9.	Nitrogen content percent Wt. minimum	Elemental Analyser	7.0
10.	Stripping value with bitumen containing 1 percent Wt. antistripping compound at 40°C 24 hours	IS:6241 As given at the end of Appendix	No stripping
11.	Under water coating test	- do -	Complete Coating
12.	Thermal stability at 163°C 5 hours	- do -	Should not lose its efficacy
13.	Boiling water test percent minimum coating	ASTM D 3625	95
14.	Retained Marshall Stability percent minimum	As given at the end of appendix	75

Table A4-2 Tentative Recommended Minimum Dose of Antistripping Agent for Sprayed Work

Aggregate stripping value	Dose of antistripping agent in percent by weight of bitumen			
	Surface dressing with precoated aggregate	Pentration Macadam/Built up spray grout	Surface Dressing with uncoated aggregate	Liquid seal coat
0-25	0.5	0.6	0.7	0.8
25-50	0.6	0.7	0.8	1.0
50-100	0.75	1.0	1.0	1.0

4.2 Mixing Procedure During Construction : The required dose of the anti-stripping agent shall be poured into hot bitumen tank and allowed 15 to 30 minutes of circulation or stirred to ensure a homogeneous mix. It is necessary to use a stable antistripping agent or increase the dose according to expected degradation. Alternatively, the correct dose shall be injected into the bitumen line by means of a pump. The agent is fed into the bitumen first before it is sprayed on the aggregate in the mix; thus, no separate mixing time for mixing the agent with bitumen is required. In rolled asphalt and bitumen mastic surfacing works, precoated chippings are pressed into the hard surface while the mix is still hot to make the newly laid surface skid resistant. These chippings shall be precoated with bitumen treated with antistripping compound.

Table A4-3 Tentative Recommended Minimum Dose of Antistripping Compound in Bitumen Premix Works

Stripping value of aggregate	Dose of antistripping agent in percent by weight of bitumen		
	Voids content 3-5 percent	Voids content 5-10 percent	Voids content 10-15 percent
0-25	0.3	0.4	0.5
25-50	0.4	0.5	0.6
50-100	0.6	0.8	1.0

Annexure to the Appendix 4

TESTING PROCEDURE FOR SOLUBILITY OF ANTISTRIPPING AGENT IN DIESEL OIL

Procedure: 98 ml of diesel oil (HDO or LDO) and 2 ml of antistripping agent shall be taken in a measuring cylinder with stopper. The cylinder along with its contents shall be dept in water bath, maintained at 50° + 1°C for half an hour. It shall then be taken out from water bath and shaken vigorously for 10 minutes. The stopper shall be removed and the cylinder kept in water bath for half an hour and examined for separation or settlement.

Reporting of Results: An antistripping agent is reported to be completely soluble in diesel oil if no separation or settlement is observed for half an hour.

TESTING STRIPPING VALUE OF AGGREGATES USING BITUMEN WITH VARYING PERCENTAGES OF ANTISTRIPPING AGENT

Procedure: Coarse aggregate passing 19 mm sieve and retained on 13.2 mm sieve shall be washed and dried in an oven for 24 hours at 110°C. Such dried 200 gms of coarse aggregates shall be heated at 149°C and then mixed with 80/100 penetration grade bitumen 5 percent by weight of coarse aggregate heated upto 163°C. The mixture shall be mixed thoroughly for uniform coating of aggregates by bitumen. The mix shall then be transferred to a 500 ml beaker and allowed to cool to room temperature. Distilled water shall be added in the beaker, which shall be placed in a water bath maintained at 40° ± 1°C for 24 hours. The percentage degree of stripping shall be assessed visually. The test shall also be conducted with water containing 1 percent Sodium Chloride, as a precautionary measure to eliminate water contamination. The test is repeated using bitumen containing upto one percent of antistripping agent in stages of 0.25 percent.

TESTING EFFICACY OF ANTISTRIPPING AGENT TO COAT AGGREGATES WITH BITUMEN IN PRESENCE OF WATER

Procedure: The antistripping agent shall be added in percent contents of 0.0, 0.25, 0.50., 0.75, 1.00 and 1.25 to cutback bitumen MC3 (4 parts of bitumen 80/100 and 1 part of kerosene oil). The blends shall be used for testing their ability to coat the road aggregates under water.

(a) 100 gm of clean and dry stone dust conforming to following gradation shall be taken:

Sieve Size	Percent Passing
2.36 mm	100
1.18 mm	80

600 mic.	75
300 mic.	45

The bottle shall be filled to 3/4 of its volume with distilled water at 40°C. The bitumen-antistripping agent blend shall be added in the bottle at the rate of 7.5 percent by weight of stone dust. The stopper shall be replaced and the bottle shall be vigorously shaken for two minutes. The water shall be then drained off and the stone dust shall be transferred to a piece of paper and examined visually for satisfying complete coating. The minimum percent content of antistripping agent at which the stone dust sample is thoroughly coated shall be rocorded. The test shall be repeated at 60°C in water as well as 1 percent solution of Sodium Chloride in water for both the testing temperatures.

(b) The under water coating test further be conducted with coarse aggregate, passing 19 mm sieve and retained on 13.2 mm siee. In this case, the percent content of the cutback-antistripping agent blend shall be kept at 5 percent by weight of coarse aggregate. In order to take care of contamination in water, the test shall also be carried out in the 1 percent Sodium Chloride in water.

The minimum percent content of antistripping agent at which stone dust/coarse aggregate is thoroughly coated as per (a) and (b) shall be taken as the dose of antistripping agent.

TESTING FOR THERMAL STABILITY OF ANTISTRIPPING AGENT

Procedure: Blends of antistripping agent and bitumen of 80/100 grade shall be prepared with 0.00, 0.25, 0.50, 0.75 and 1.00 percent contents of antistripping agent and kept in oven at 163°C for five hours. After the heat exposure, the blend samples are fluxed with kerosene oil to obtain the consistency of MC 3 and tested for under water coating test.

Reporting of Test Results: An antistripping agent shall be deemed to be heat resistant if the dose requirement before and after heat exposure remains unchanged.

QUANTITATIVE EVALUATION OF RETAINED MARSHALL STABILITY VALUES AFTER IMMERSION IN WATER

Procedure: For Quantitative evaluation, the tests shall be carried out as stipulated in ASTM D1075 (Effect of Water on Cohesion of Compacted Bituminous Mixtures). The gradation of aggregates shall be such as to give sufficient voids in the compacted bituminous mix to bring out the effects of stripping. The gradation of aggregates shall be as under:

Sieve Size	Percent Passing
19.00 mm	100
13.20 mm	75-100
9.50 mm	60-80
4.75 mm	35-55
2.36 mm	20-35
600 mic	10-22
300 mic	6-16
150 mic	4-12
75 mic	2-8

The Marshall test specimens shall be prepared using 5 percent bitumen of 80/100 grade by weight of aggregates blended with varying percentages of antistripping agents from 0 to 1 percent in steps of 0.25 percent. The test samples shall give a void content of about 6 percent. At least 8 standard Marshall specimens for each of the varying antistripping agent percentages shall be prepared. Each set of 8 test specimens shall be sorted out in two groups of 4 each so that the average specific gravity of the specimen in Group I shall be essentially the same as in Group II. Group-I shall be tested for Marshall Stability in the usual procedure ASTM D1559. Group-II specimens shall be immersed in water for 24 hours at 60°C ± 1°C and then shall be tested immediately for Marshall stability as per ASTM D 1559.

Calculation: The numerical index of resistance of bituminous mixtures to the detrimental effect of water shall be expressed as the index of retained stability:

$$\frac{\text{Average Marshall Stability of Group-II}}{\text{Average Marshall Stability of Group-I}} \times 100 \text{ percent}$$

Requirement for Acceptance: A minimum of 75 percent of retained Marshall strength shall be required for acceptance.

Appendices

Appendix – 1200/I-1

HISTORY OF SINKING OF WELL NO _____

LOWEST BED LEVEL _____ LOWEST WATER LEVEL _____ HIGHEST FLOOD LEVEL _____ FOUNDING LEVEL _____

HEIGHT OF CURB _____ HEIGHT OF CUTTING EDGE _____

DATE	STEINING					SINKING					DEPTH OF SUMP BELOW CUTTING EDGE	STRATA MET WITH	KENTLEDGE			QUANTITY OF DREDGED MATERIAL	REPORT REGARDING OBSTACLES OR SAND BELOW DURING SINKING	REPORT ANY SPECIAL METHOD OF SINKING EMPLOYED	REMARKS	SIGNATURE OF SUPERVISING OFFICER
	REDUCED LEVEL (RL) OF BOTTOM OF CUTTING EDGE	RL OF TOP OF STEINING BEFORE CASTING	RL OF TOP OF STEINING AFTER CASTING	HEIGHT OF STEINING CAST (COL.4-COL.3) METRE	TOTAL HEIGHT OF STEINING (INCLUDING) CURB AND CUTTING EDGE- (COL.4-COL.3) METRE	RL. OF REFERENCE LEVEL (AT WHICH CUTTING EDGE IS PLACED)	INITIAL GAUGE READING METRE	FINAL GAUGE READING METRE	SINKING DURING THE DAY (COL.9-COL.8) METRE	RL OF BOTTOM OF CUTTING EDGE (COL.7-COL.8) METRE	METRE		WEIGHT TONNES	ECCENTRI-CITY ALONG X-AXIS METRE	ECCENTRI CITY ALONG Y-AXIS METRE	CUBIC METRE				
1	2	3	4	5	6	7	8	9	10	11	12	13	14	15	16	17	18	19	20	21

Appendix – 1200/I-2

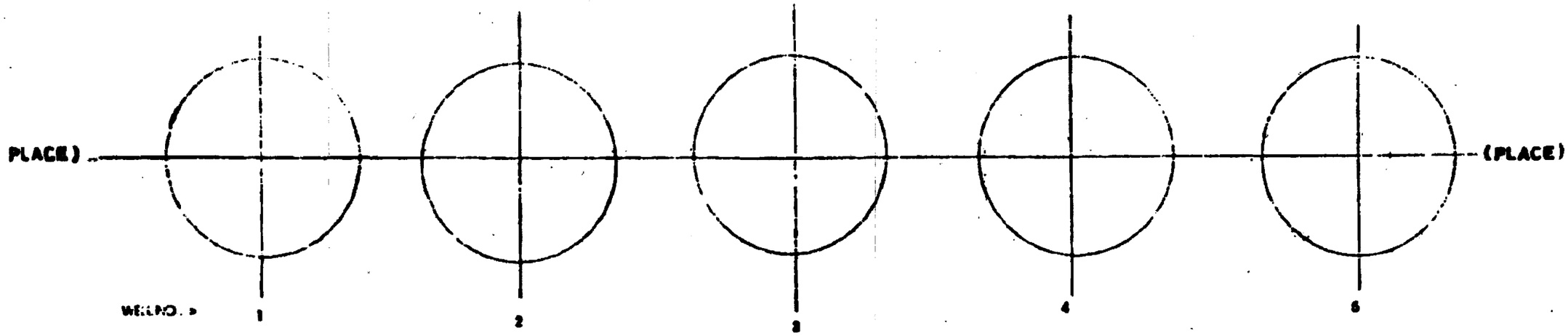

PLAN SHOWING WELL NOS.

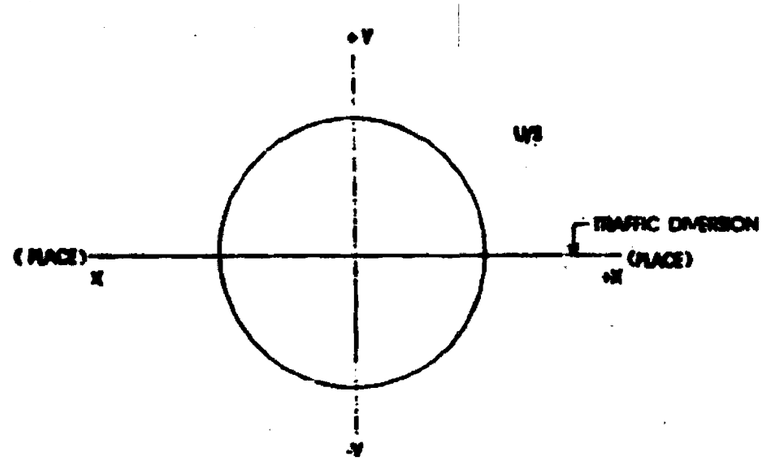

PLAN OF WELL NO.....

Appendix 1200/II

(Refer Clause 1208.10)

TILT AND SHIFT IN WELL NO:-

DATE	TOTAL STEINING METRE	TOTAL SINKING METRE	REDUCED LEVELS (R.L'S) OF GAUGE MARKS						TILT ALONG X-AXIS COLUMN 6 DIVIDED BY WELL DIA	TILT ALONG Y-AXIS COLUMN 9 DIVIDED BY WELL DIA	RESULTANT TILT $\sqrt{(\text{COL. } 10^2 + \text{COL. } 11^2)}$	SHIFT			ACTION TAKEN FOR RECTIFICATION	REMARKS	SIGNATURE OF SUPERVISING OFFICER	
			ALONG X-AXIS			ALONG Y - AXIS						ALONG X-AXIS WITH DIRECTION METRE	ALONG Y-AXIS WITH DIRECTION METRE	RESULTANT $\sqrt{(\text{COL. } 13)^2 + (\text{COL. } 14)^2}$ METRE				
			(PLACE) END	(PLACE) END	DIFFERENCE (COL.5 - COL.4) METRE	(U/S)	(D/S)	DIFFERENCE (COL.8 - COL7) METRES										
1	2	3	4	5	6	7	8	9	10	11	12	13	14	15				

Appendix – 1500/I

(Refer Clause 1503.2)

INFORMATION TO BE SUPPLIED BY THE MANUFACTURERS OF PROPRIETARY SYSTEMS

1 GENERAL

1.1 The information which the manufacturer is required to supply shall be in such detail as to obviate unsafe use of the equipment due to the intention of the manufacturer not having been made clear or due to wrong assumptions on the part of the user.

1.2 The user shall refer unusual problem or problems of erection/assembly not in-keeping with the intended use of the equipment, to the manufacturer of the equipment.

2 INFORMATION REQUIRED

2.1 The manufacturers of proprietary systems shall supply the following information:

a) Description of basic functions of equipment

b) List of items of equipment available, giving range of sizes, spans and such like, with the manufacturer's identification numbers or other references.

c) The basis on which the safe working loads have been determined and whether the factor of safety given applies to collapse or yield.

d) Whether the supplier's data is based on calculations or tests. This shall be clearly stated as there may be wide variations between results obtained by either method.

e) Instructions for use and maintenance, including any points which require special attention during erection, especially where safety is concerned.

f) Detailed dimensional information, as follows :

(i) Overall dimensions and depth and widths of members;

(ii) Line drawings including perspectives and photographs showing normal uses;

(iii) Self weight;

(iv) Full dimensions of connections and any special positioning arrangements;

(v) Sizes of members, including tube diameters and thicknesses of materials;

(vi) Any permanent camber built into the equipment; and

(vii) Sizes of holes and dimensions giving their positions.

g) Data relating to strength of equipment as follows :

(i) Average failure loads as determined by tests;

(ii) Recommended maximum working loads for various conditions of use;

(iii) Working resistance moments derived from tests;

(iv) Working shear capacities derived from tests;

(v) Recommended factors of safety used in assessing recommended loads and deflections based on test results;

(vi) Deflections under load together with recommended pre-camber and limiting deflections;

(vii) If working loads depends on calculations, working stresses should be stated. If deflections depend on the theoretical moments of inertia or equivalent moments of inertia rather than tests, this should be noted;

(viii) Information on the design on the loading against wind and other horizontal loadings; and

(ix) Allowable loading relating to maximum extension of bases and/or heads.

Appendix-1700/I

(Refer Clause 1717.7.5)

SPECIFICATION FOR CONSTRUCTION JOINTS

Location

The location of construction joint shall be as shown on the drawing or as approved by the Engineer. If additional/new joints are approved by the Engineer, the following considerations for their location shall be taken into account:

(i) Joints shall be provided in non-aggressive zones or in non-splash zones. If not feasible, the joints shall be sealed.

(ii) Joints should be positioned where they are readily accessible for preparation and concreting , such as location where the cross-section is relatively small, and where reinforcement is not congested.

(iii) In beams and slabs, joints should not be near the supports. Construction Joints between slabs and ribs in composite beams should be avoided.

(iv) For box girders, it is preferable to cast the soffit and the webs without any joint.

(v) Location of joints shall minimize the effects of the discontinuity on the durability, structural integrity and the appearance of the structure.

Preparation of Surface of the Joint

Laitance shall be removed before fresh concrete is cast. The surface shall be roughened. Care shall be taken that they should not dislodge the coarse aggregates. Concrete may be brushed with a stiff brush soon after casting while the concrete is still fresh.

If the concrete has partially hardened, it shall be treated by wire brushing or with a stiff water jet followed by drying with air jet immediately.

Fully hardened concrete shall be treated with mechanical hand tools or grit blasting, taking care not to split or crack aggregate particles.

Before further concrete is cast, the surface should be thoroughly cleaned to remove debris and accumulated rubbish, one effective method being by air jet.

Where there is likely to be a delay before placing the next concrete lift, protruding reinforcement shall be protected. Before the next lift is placed, rust, loose mortar or other contamination shall be removed from the reinforcements. In aggressive environment, the concrete shall be cut back to expose the reinforcements for a length of about 50 mm to ensure that contaminated concrete is removed.

The joint surface shall not be contaminated with release agents, dust or curing membrane.

Concreting of Joints

The old surface shall be thoroughly cleaned and soaked with water. Standing water shall be removed shortly before the new concrete is placed and the new concrete shall be thoroughly compacted. Concreting shall be carried out continuously upto the construction joints.

Surface retarders may be used to improve the quality of construction joints.

For a vertical construction joint, a stopping board shall be fixed previously at the predetermined position and shall be properly stayed to prevent its displacement or bulging when concrete is compacted against it. Concreting shall be continued right upto the board.

Appendix-1700-I : Permeability Test

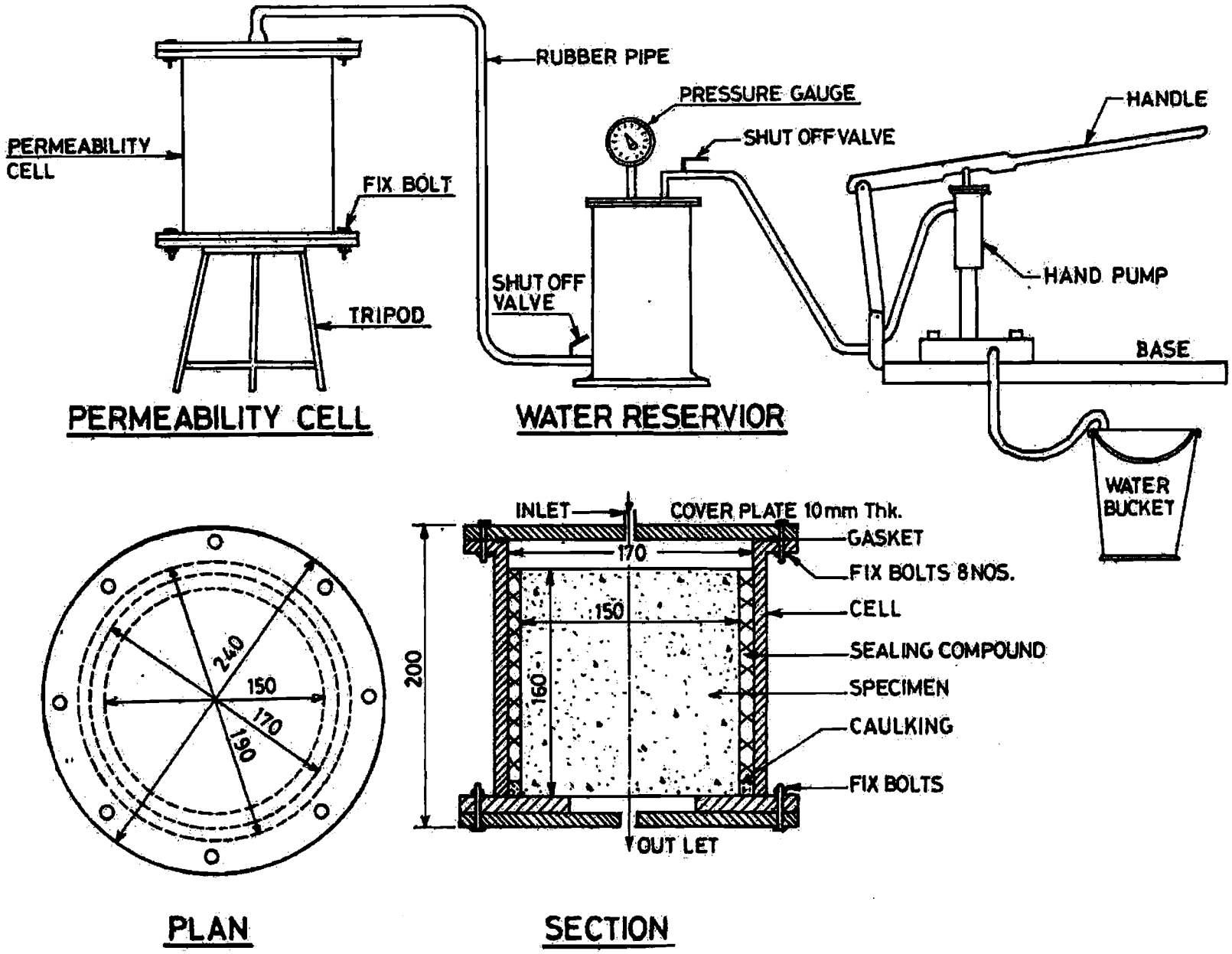

Appendices

Appendix-1800/I

(Refer Clause 1805.6.2)

TESTS ON SHEATHING DUCTS

All tests specified below shall be carried out on the same sample in the order given below.

At least 3 samples for one lot of supply (not exceeding 7000 metre length) shall be tested.

The tests are applicable for sheathing transported to site in straight lengths when the prestressing cable is threaded inside the sheathing prior to concreting. These tests are not applicable for sheathing not for coiled cable and transported to site as an assembled unit, nor for sheathing ducts placed in position without threading of prestressing cable prior to concreting.

(A) WORKABILITY TEST

A test sample 1100 mm long is soldered to a fixed base plate with a soft solder (**Fig.1800/I-1**). The sample is then bent to a radius of 1800 mm alternately on either side to complete 3 cycles.

Thereafter, the sealing joints will be visually inspected to verify that no failure/opening has taken place.

(B) TRANSVERSE LOAD RATING TEST

The test ensures that stiffness of the sheathing is sufficient to prevent permanent distortion during site handling.

The sample is placed on a horizontal support 500 mm long so that the sample is supported at all points of outward corrugations.

A load as specified in **Table 1** is applied gradually at the centre of the supported portion through a contact surface 12 mm long. It shall be ensured that the load is applied approximately at the centre of two corrugations, **Fig. 1800/I-2**. The load as specified is applied in increments.

Table-1

Dia 25 mm To 35 mm	more than 35 mm up to 45 mm	more than 45 mm up to 55 mm	more than 55 mm up to 65 mm	more than 65 mm up to 75 mm	more than 75 mm up to 85 mm	more than 85 mm up to 90 mm
Load:250 N	400 N	500 N	600 N	700 N	800 N	1000 N

The sample is considered acceptable if the permanent deformation is less than 5 percent.

(C) TENSION LOAD TEST

A test specimen is subjected to a tensile load. The hollow core is filled with a wooden circular piece having a diameter of 95 percent of the inner dia of the sample to ensure circular profile during test loading, **Fig. 1800/I-3**.

A coupler is 'Screwed on and the sample loaded in increments, till reaching the load specified in **Table 2**. If no deformation of the joints nor slippage of couplers is noticed, the test shall be considered satisfactory.

Table-2

Dia in mm	Load
25 upto 35	300 N
More than 35 upto 45	500 N
More than 45 upto 55	800 N
More than 55 upto 65	1100 N
More than 65 upto 75	1400 N
More than 75 upto 85	1600 N
More than 85 upto 90	1800 N

(D) WATER LOSS TEST

The sample is sealed at one end. The sample is filled with water and after sealing the end is connected to a system capable of applying a pressure of 0.05 MPa, **Fig. 1800/I-4**.and kept constant for 5 minutes using a hand pump with pressure gauge or stand pipe system can be used.

The sample is acceptable if the water loss does not exceed 1.5% of the volume.

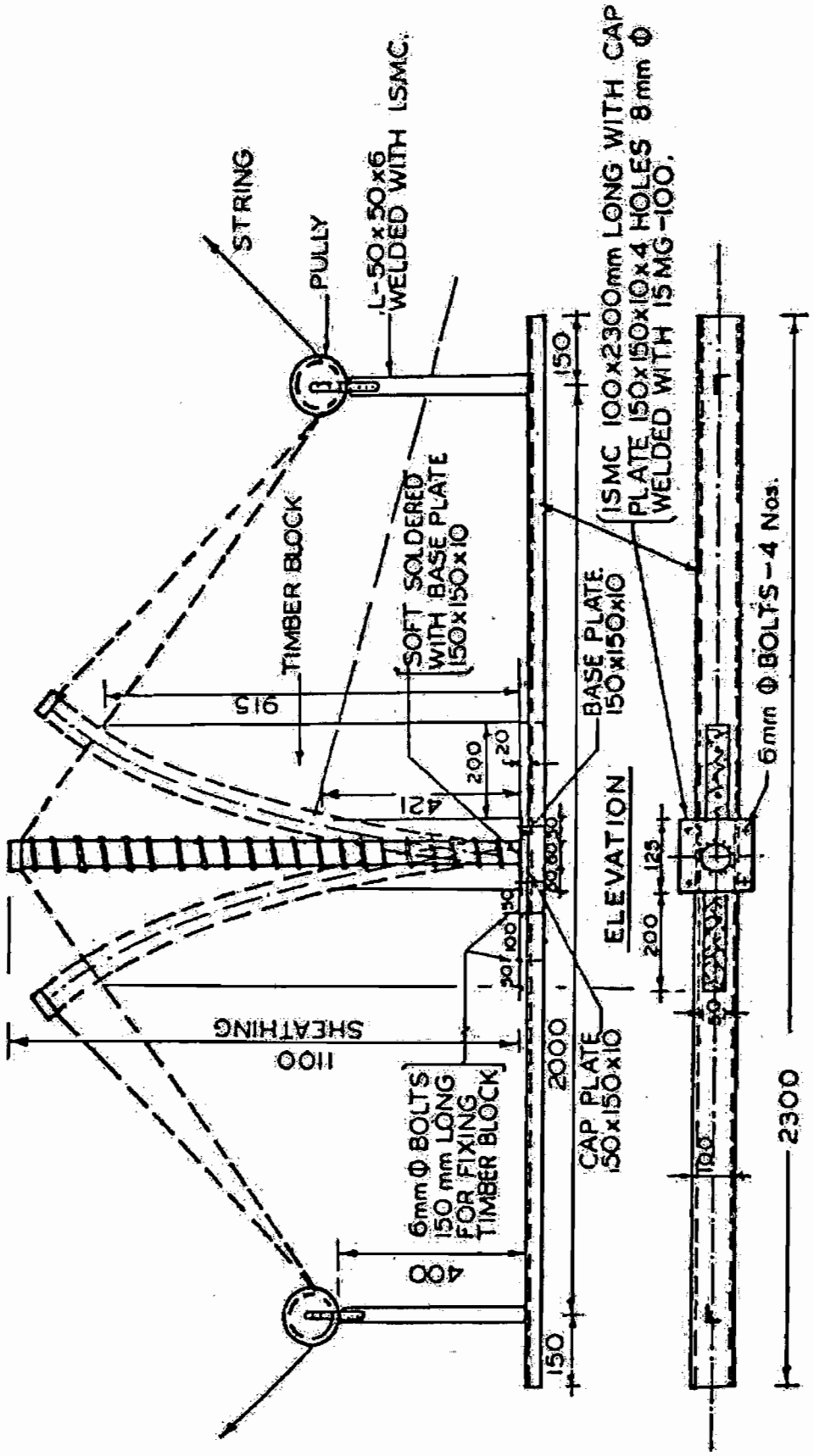

Fig. 1800/I-1 : Dimensions are in mm.

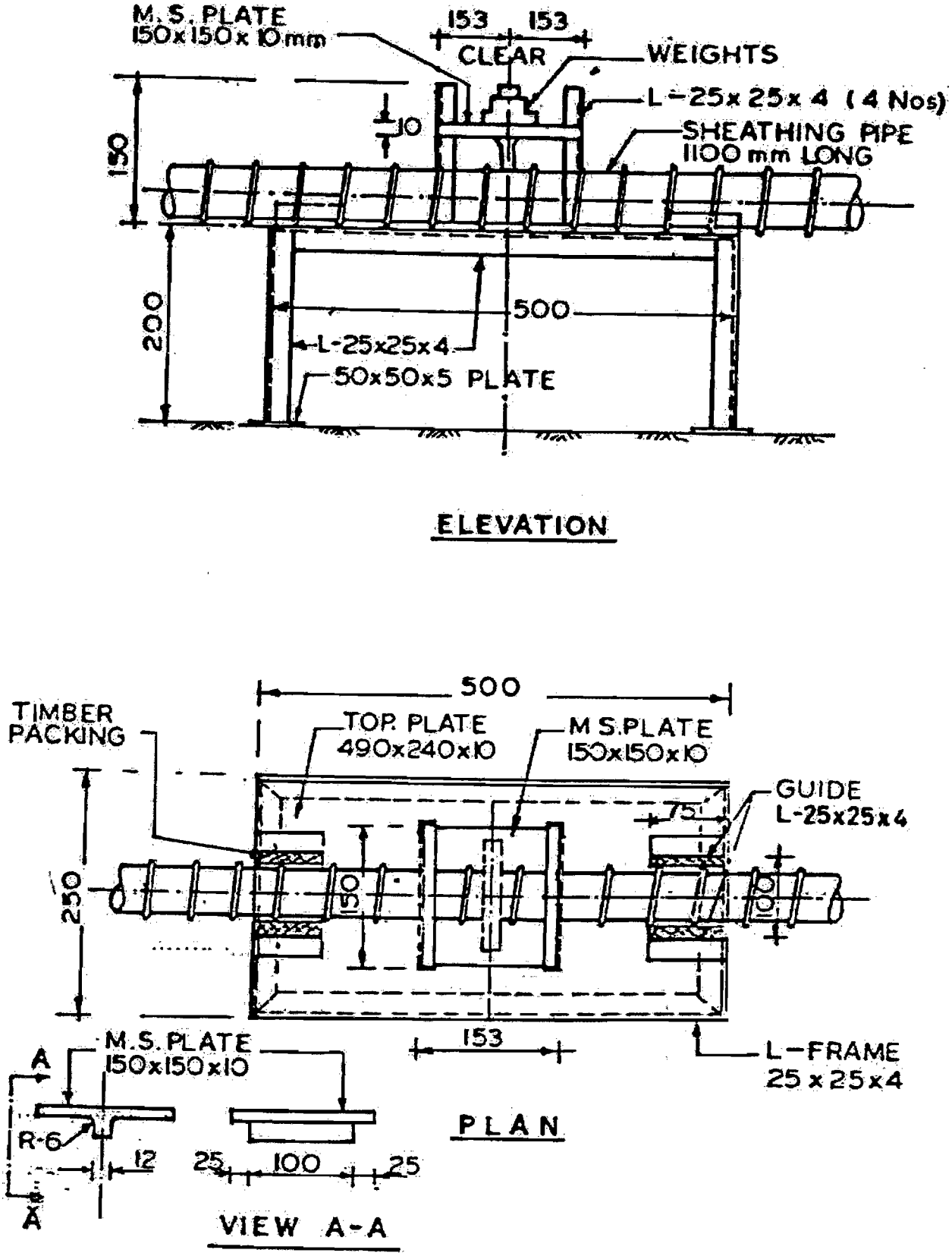

Fig. 1800/I-2 : Dimensions are in mm.

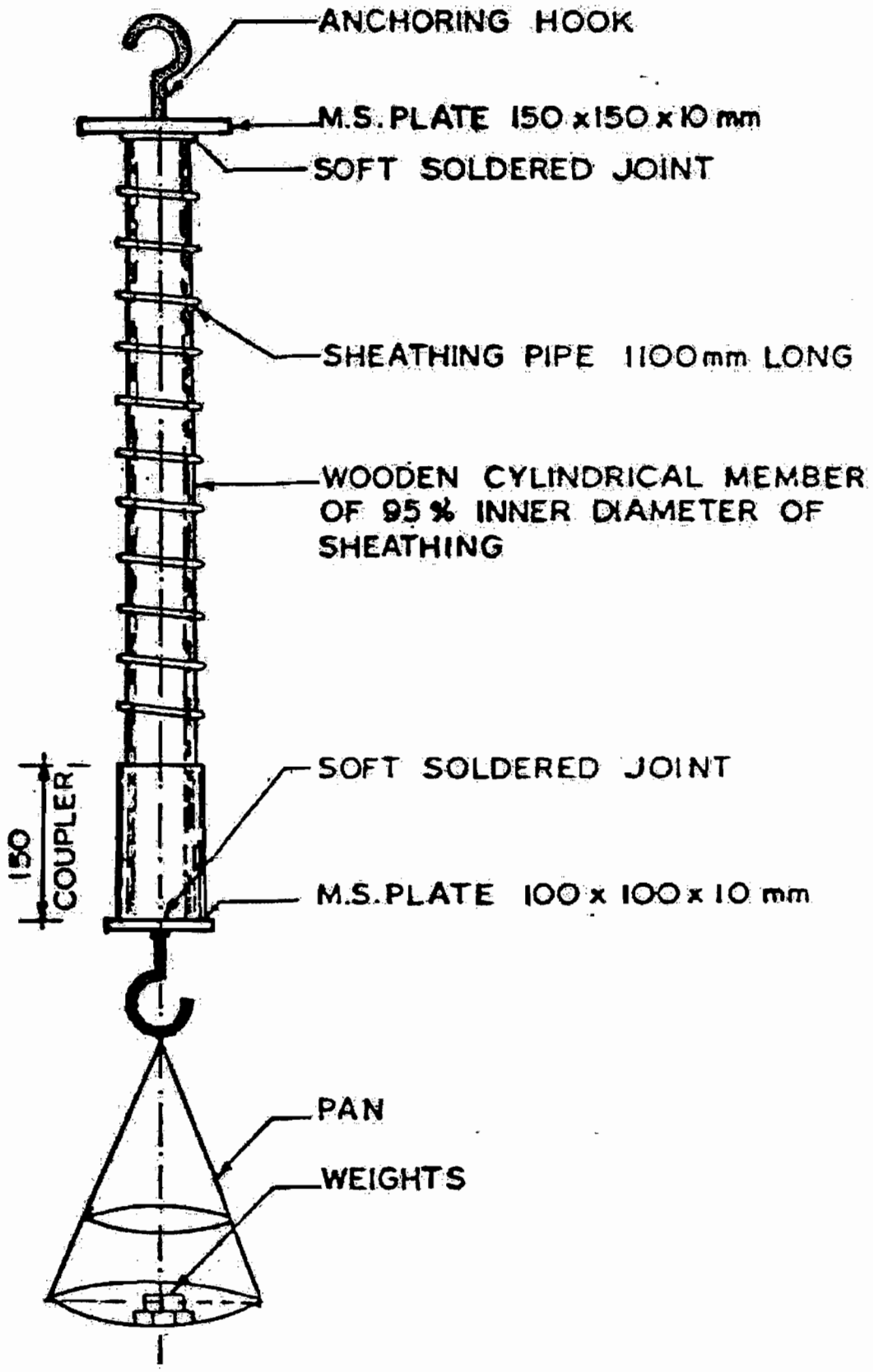

Fig. 1800/I-3 : Dimensions are in mm.

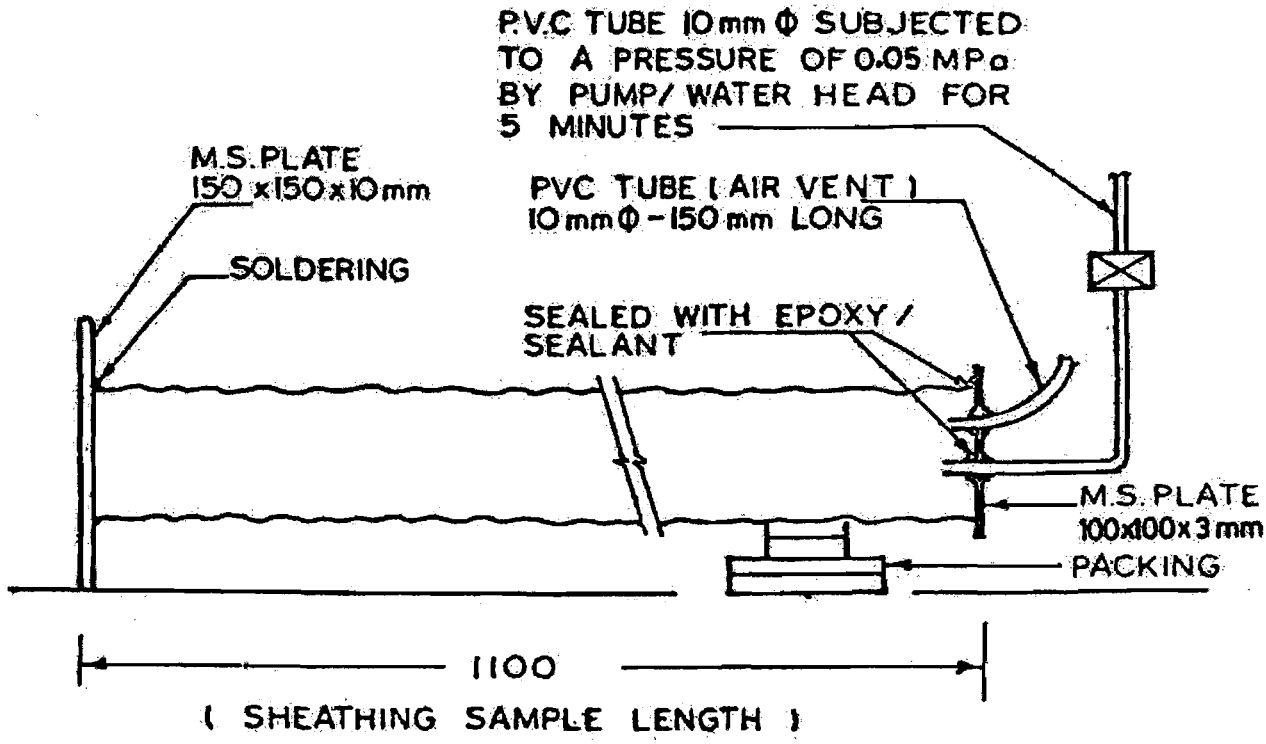

Fig. 1800/I-4 : Dimensions are in mm.

Appendix 1800/II

(Refer Clause 1808)

PRESTRESSING REPORT :

NUMBER OR NAME OF THE BRIDGE:

SPAN No. _____

ELEMENT/GIRDER No. _____

LAST DATE OF CONCRETING _____

DATE OF PRESTRESSING _____

Stressing Sequence Drg. No.

Marks of Plant Used Jacks :

Pumps :

Gauges :

Left end of Cable = A
Right end of Cable = B
Specified Gauge Pressure during Jacking

Ave. Cube Strength at the time of stressing : _____ kg/cm²

High Tensile Steel (UTS) _____ kg/cm²

Cube Strength : at 28 days _____ kg/cm²

Max-Jack Pressure not to exceed under any circumstances _____ kg/cm²

COLUMNS 1		2	3	4	5	6	7	8	9	10	11	12	13	14	15	16	17	18	19	20	21	22	23	24	25	26
Cable Stressing Sequence		Calculated Elongation mm		Gauge Mark Readings of extension in mm at the pressure of 100 kg/cm².			Gauge Mark Readings of extension in mm at the pressure of 200kg/cm².			Reading at Instant of Locking					INITIAL ELONGATION upto 100 kg/cm² e6 = (e4 - e3) mm	TOTAL Elongation e7 = e5 - e3+e6 mm	DEVIATION e1 - e7 mm	SLIP (Draw-in) mm					NET ELONGATION e8 = e7-S mm	DEVIATION After Draw-in e2 - e8 mm	% Excess or shortfall in deviation after draw in $\frac{e2 - e8 \times 100}{e2}$	Remarks
																		Immediately after locking		After 24 Hrs		Total Draw-in				
Sequence	Cable MKD	Before Draw-in e1	After Draw-in e2	ΔA_o	ΔB_o	e3 - ΔA_o + ΔB_o	Δ A1	Δ B1	e4 = Δ A1 + Δ B1	Δ A2 mm	PA kg/cm²	Δ B2 mm	PB kg/cm²	e5 = Δ A2 + Δ B2 mm				SA_o	SB_o	SA_{24}	SB_{24}	$S=SA_o + SB_o + SA_{24} + SB_{24}$				

Signature of Officers present during prestressing :

Client Contractor System supplier

Appendix-1800/III

(Refer Clause 1809)

SPECIFICATIONS FOR GROUTING OF POST-TENSIONED CABLES IN PRESTRESSED CONCRETE BRIDGES

1 GENERAL

1.1 The recommendations cover the cement grouting of post- tensioned tendons of prestressed concrete members of bridges. This also covers some of the essential protective measures to be adopted for minimising corrosion in PSC bridges.

1.2 The purpose of grouting is to provide permanent protection to the post-tensioned steel against corrosion and to develop bond between the prestressing steel and the surrounding structural concrete. The grout ensures encasement of steel in an alkaline environment for corrosion protection and by filling the duct space, it prevents water collection and freezing.

2 MATERIALS

2.1 Water

Only clean potable water free from impurities conforming to **Section 1000** shall be permitted. No sea or creek water is to be used at all.

2.2 Cement

Ordinary Portland cement should be used for preparation of the grout. It should be as fresh as possible and free of any lumps. Pozzolana cement shall not be used.

2.3 Sand

It is not recommended to use sand for grouting of prestressing tendons. In case the internal diameter of the ducts exceeds 150 mm, use of sand may be considered. Sand used, shall conform to IS:383 and shall pass through IS Sieve No. 150. The weight of sand in the grout shall not be more than 10 percent of the weight of cement, unless proper workability can be ensured by addition of suitable plasticizers.

2.4 Admixtures

Acceptable admixtures conforming to IS:9102 may be used if tests have shown that their use improves the properties of grout, i.e. increasing fluidity, reducing bleeding, entraining air or expanding the grout. Admixtures must not contain chlorides, nitrates, sulphides, sulphites or

any other products which are likely to damage the steel or grout. When an expanding agent is used, the total unrestrained expansion should not exceed 10 percent. Aluminum powder as an expanding agent is not recommended for grouting because its long term effects are not free from doubt.

2.5 Sheathing

2.5.1 For specifications of sheathing, **Section 1800** may be referred

2.5.2 Grout openings or vents

a) All ducts should have grout openings at both ends. For this purpose special openings should be provided where such openings are not available at end anchorages. For draped (curved) cables vents shall be provided at all crown and valley points. It is a good practice to provide additional air vents at suitable intervals not exceeding 20 m. All grout openings or vents should include provisions for preventing grout leakage.

b) Standard details of fixing Couplers, inlets, outlets and air vents to the duct anchorage shall be followed as recommended by the supplier of the prestressing system.

2.5.3 Ducts should be securely fastened at close intervals. All un-intended holes or openings in the duct must be repaired prior to concrete placing, The joints of the couplers and the sheathing should be made water proof by use of adhesive tape or similar suitable system capable of giving leak proof joints, Grout openings and vents must be securely anchored to the duct and to either forms or to reinforcing steel to prevent displacement during concreting operations due to weight, buoyancy and vibrations.

2.5.4 Ducts require very careful handling as, being of thin metal, they are susceptible to leakage due to corrosion in transit or storage, by tearing/ripping in handling particularly when placed adjoining to reinforcing steel, by pulling apart at joints while inserting tendons prior to concreting, or by accidental puncturing while drilling for form ties/inserts. Ducts are also liable to damage by rough use of internal vibrator and sparks from welding being done close by.

3 EQUIPMENT

3.1 Grout Mixer and Agitator

It is essential that the grout is maintained in a homogeneous State and of uniform consistency so that there is no separation of cement. Use of grout mixers to obtain a colloidal grout is essential. The mixer should have an additional storage device with an agitator to keep the

grout moving continuously before it is pumped in the duct. Positive reciprocating type grout pumps should be used.

3.2 Grout Pump

The pump should be a positive displacement type and should be capable of ejecting the grout in a continuous operation and not by way of pulses. The grout pump must be fitted with a pressure gauge to enable pressure of injection to be controlled. The minimum pressure at which grout should be pumped shall be 0.3 MPa and the Grout Pump must have a relief arrangement for bypass of the grout incase of buried up of pressure beyond 1 MPA. The capacity of the grout pump should be such as to achieve forward speed of grout of around 5 to 10 metres per minute. The slower rates are Preferable as they reduce the possibility of occurrence of voids. If the capacity of the pump is large, it is usual to grout two or more cables simultaneously through a common manifold.

Use of hand pumps for grouting is not recommended. Use of Compressed air operated equipment for injection is prohibited, as it is likely that there will be some air trapped in grout.

3.3 Water Pump

Before commencement of grouting, a stand by direct feed high pressure water pump should be available at site for an emergency. In case of any problem in grouting the ducts, such pump shall immediately be connected to the duct and all grout flushed by use of high pressure water flushing. It is, therefore, necessary to have adequate storage of clean potable water for operation of the water pump for such emergencies.

3.4 Grout Screen

The grouting equipment should contain a screen having a mesh size of IS:106 (IS:105 if sand is used). Prior to introduction into the grout pump, the grout should be passed through such screen. This screen should be easily accessible for inspection and cleaning.

3.5 Connections and Air Vents

Standard details of fixing inlets, outlets and air vents to the sheathing and/or anchorage should be followed as recommended by specialist supplier of the system of prestressing. In general, all connections are to be of the "Quake couple" type and at change of diameters suitable reducers are to be provided.

4 PROPERTIES OF THE GROUT

4.1 Water/Cement ratio should be as low as possible, consistent with workability. The ratio should not normally exceed 0.45. The temperature of the grout shall not exceed 25°C.

4.2 Before grouting, the properties of the grout mix should be tested in a laboratory depending on the facilities available. Test should be conducted for each job periodically. The recommended tests are described below:

1) **Deleterious Materials**

No chloride, sulphates shall be separately added to the grout. The constituent may contain chlorides/sulphates. However, its net effect should not exceed the following limits in the grout:

- Chlorides (Cl) not more than 0.1 percent by weight of cement.
- Sulphate (SO_3) not more than 4 percent by weight of cement.

Sulphide-ions(s) not more than 0.01 percent by weight of cement

2. **Compressive Strength**

The compressive strength of 100 mm cube of the grout shall not be less than 27 MPa at 7 days or 30 MPa at 28 days. Cubes shall be cured in a moist atmosphere for the first 24 hours and subsequently in water. These tests shall be conducted in advance to ascertain the suitability of the grout mix. The 7 day strength is not mandatory if the 28 day strength requirement is met.

1) **Setting Time**

Initial setting time of grout shall be more than three hours and less than 12 hours. The final setting time shall not be less than 24 hours.

2) **Bleeding**

Bleeding is the separation of free water from the grout mix. It includes the filtering effect of strands where the cavities between the wires constituting the strand, block cement particles and permit water under pressure to move ahead of the grout in the direction of general flow of grout. The bleeding shall be sufficiently low to prevent excessive segregation and sediment of the grout material. The bleeding shall not exceed 0.3 percent of volume of the initial volume of grout after three hours kept at rest.

3) **Volume Change**

The volume change of grout kept at rest for 24 hours and tested as per ASTM C 1090 shall be within range of 1% and 5 % of the original volume.

4) **Fluidity**

Fluidity is tested as per ASTM C 939 standard using standard flow cone.

Note: The fluidity of grout changes from time of mixing to time of setting in the ducts. The requirement given above may be modified as per the specific application, depending upon the total temperature, length of tendons, head of pumping, requirement of simultaneous grouting of closely spaced tendons etc. provided that other specifications and functions are satisfied.

5 MIXING OF GROUT

5.1 Proportions of materials should be based on field trials made on the grout before commencement of grouting, but subject to the limits specified above. The materials should be measured by weight.

5.2 Water should be added to the mixer, first, followed by Portland cement and sand, if used. Admixture if any, may be added as recommend by the manufacturer.

5.3 Mixing time depens upon the type of the mixer, but will normally be between 2 and 3 minutes. However, mixing should be for such a duration as to obtain uniform and thoroughly blended grout, without excessive temperature increase or loss of expansive properties of the admixtures. The grout should be continuously agitated until it is injected.

5.4 Once mixed, no water shall be added to the grout to increase its fluidity.

5.5 Hand mixing is not permitted.

6 GROUTING OPERATIONS

6.1 General

a) Grouting shall be carried out as early as possible but not later than 2 weeks of stressing a tendon. Whenever this stipulation cannot be complied with for unavoidable reason, adequate temporary protection of the steel against corrosion by methods or products which will not impair the ultimate adherence of the injected grout should be ensured till grouting. The sealing of the anchorage ends after concreting is considered to be a good practice to prevent ingress of water. For structures in aggressive environment, sealing of the anchorage ends is mandatory.

Notes :

i) Application of some patented water soluble oils for coating of steel/VPI powder injection/ sending in of hot, dry, oil-free compressed air through the vents at frequent intervals have shown good results.

ii) Some of the methods recommended for sealing of anchorages are to seal the openings with bitumen impregnated gunny bag or water proof paper or by building a brick pedestal plastered on all faces enclosing the exposed wires outside the anchorages.

iii) Any traces of oil if applied to steel for preventing corrosion should be removed before grouting operation.

iv) Ducts shall be flushed with water for cleaning as well as for wetting the surfaces of the duct walls. Water used for flushing should be of same quality as used for grouting. It may, however, contain about 1 percent of slaked lime or quick lime. All water should be drained thorough the lowest vent pipe or by blowing compressed air through the duct.

v) The water in the duct should be blown out with oil free compressed air.

Blowing out water from duct for cables longer than 50 m draped up at both ends by compressed air is not effective. Outlet/ vent provided at or near the lowest point shall be used to drain out water from duct.

vi) The connection between the nozzle of the injection pipe and duct should be such that air cannot be sucked in.

vii) All outlet points including vent openings should be kept open prior to commencement of injection grout.

viii) Before grouting, all air in the pump and hose should be expelled. The suction circuit of the pump should be air-tight.

6.2 Injection of Grout

a) After mixing the grout should be kept in continuous movement.

b) Injection of grout must be continuous and should not be interrupted.

c) For vertical cable or cables inclined more than 60 degrees to the horizontal, injection should be effected from the lowest anchorage or vent of the duct.

d) The method of injection should ensure complete filling of the ducts. To verify this it is advisable to compare the volume of the space to be filled by the injected grout with the quantity of grout actually injected.

e) Grouting should be commenced initially with a low pressure of injection of upto 0.3 MPa increasing it until the grout comes out at the other end. The grout should be allowed to flow freely from the other end until the consistency of the grout at this end is the same as that of the grout at the injection end. When the grout flows at the other end, it should be closed off and building up of pressure commenced. Full injection pressure at about 0.5 MPa shall be maintained for at least one minute before closing the injection pipe. It is recommended practice to provide a stand pipe at the highest point of the tendon profile to hold all water displaced by sedimentation or bleeding. If there is a built up of pressure much in excess of 1 MPa without flow of grout coming at the other end; the grouting operation should be discontinued and the entire duct flushed with high pressure water. Also, the bypass system indicated in para 3.2 above is essential for further safety.

f) In the case of cables draped downwards e.g. in cantilever construction simultaneous injection from both ends may be adopted. **Fig. 1800/III-1**.

g) Grout not used within 30 minutes of mixing should be rejected.

h) Disconnection is facilitated if a short length of flexible tube connects the duct and injection pipe. This can be squeezed and cut off after the grout has hardened.

7 PRECAUTIONS AND RECOMMENDATIONS FOR EFFECTIVE GROUTING

a) In cold and frosty weather, injection should be postponed, unless special precautions are taken. If frost is likely to occur within 48 hours after injection, heat must be applied to the member and maintained for at least 48 hours after injection so that the temperature of the grout does not fall below 5 degrees Celsius. Prior to commencement of grouting, care must be taken to ensure that the duct is completely free of frost/ ice by flushing with warm water, but not with steam.

b) The temperature of the grout shall not exceed 25 degrees Celsius. For increasing the workability of grout, its temperature may be lowered by use of chilled water or by putting ice outside the grout storage container.

c) When the cables are threaded after concreting, the duct must be temporarily stiffened during concreting by inserting bunch of strands, Wires or reinforcement or a rigid PVC pipe or any other suitable method.

d) During concreting, care shall be taken to ensure that the sheathing is not damaged. Needle vibrators shall be used with extreme care by well experienced staff only, to ensure against such damage.

e) It is a good practice to move the cables in both directions during the concreting operations. This can easily be done by light hammering the ends of the wires/strands during concreting. It is also advisable that 3 to 4 hours after concreting the cable should be moved both ways through a distance of about 20 cms. With such movement, any leakage of mortar which has taken place in spite of all precautions, loses bond with the cables, thus reducing the chance of blockages. This operation can also be done by fixing prestressing jacks, at one end pulling the entire cable and then repeating the operation by fixing the jack at the other end.

f) The cables to be grouted should be separated by as much distance as possible.

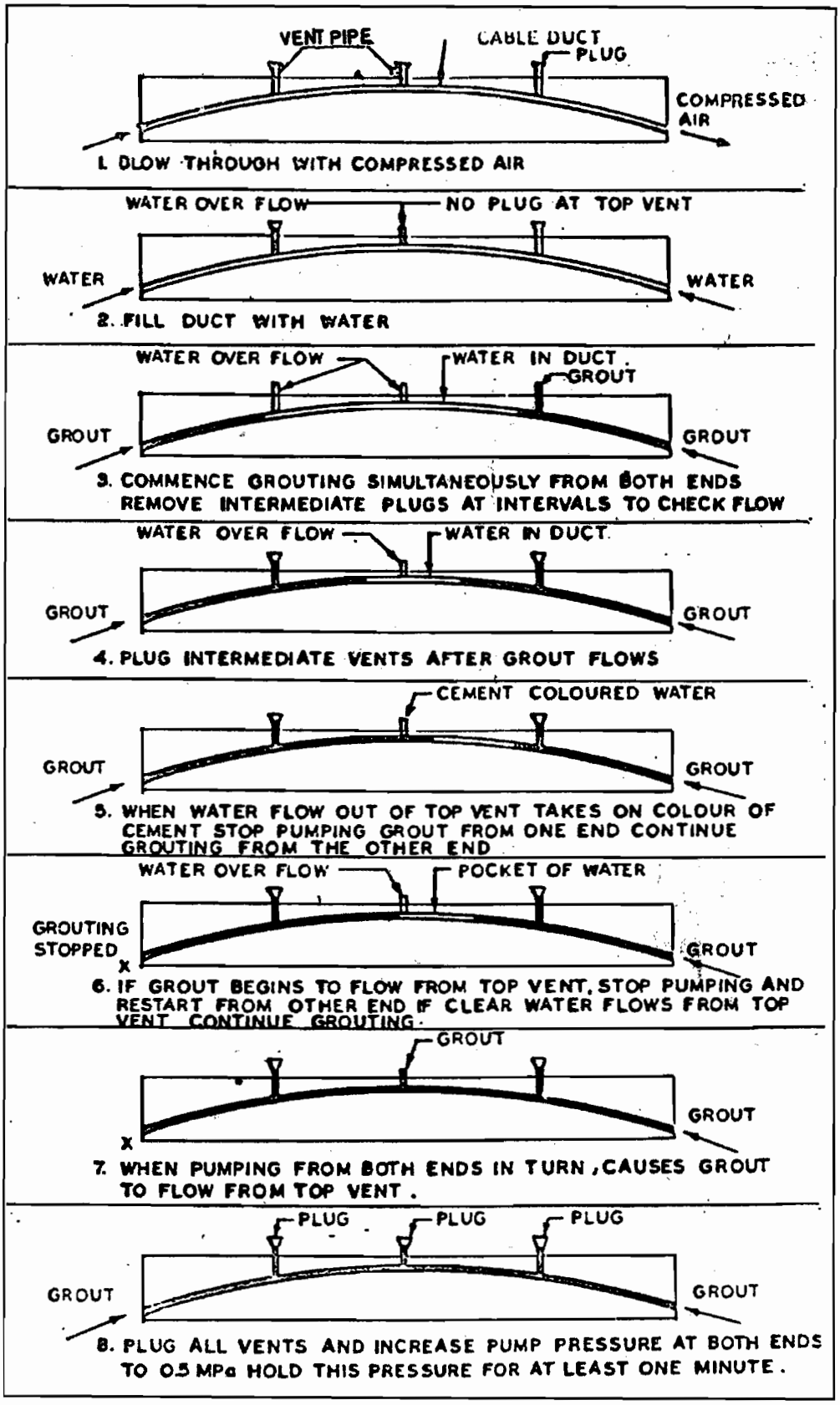

Fig. 1800/III : Procedure for Grouting of Cables Draped Downwards

g) In case of stage prestressing, cables tensioned in the first stage should not remain ungrouted till all cables are stressed. It is good practice, while grouting any duct in stage prestressing, to keep all the remaining ducts filled up with water containing 1 percent lime or by running water through such ducts till the grout has set. After grouting the particular cable, the water in the other cables should be drained and removed with compressed air to prevent corrosion.

h) Care should be taken to avoid leaks from one duct to another at joints of precast members in particular.

i) End faces where anchorages are located are vulnerable points of entry of water. They have to be necessarily protected with an effective barrier, Recesses should be packed with mortar concrete and should preferably be painted with water proof paint.

j) After grouting is completed, the projecting portion of the vents should be cut off and the face protected to prevent corrosion.

Appendix 1800/IV

(Refer Clause 1809)

GROUTING RECORD

Job Name:

Span No. Cable No:

Date of Cable Installation: Date of Grouting:

Type of Cement : OPC/II ISOPC Week and Year of Manufacture of OPC/ IISOPC

W/C Ratio: Name and amount of admixture used. if any

Temperature: Mixing water ; Grout

Time: Start ; Finish

Equipment: Grout mixture ; Grout pump ≃ _____

Cable duct: Diameter._____ Length

Volume of grout in litres _____ Regrouting

Grouting pressure :

Cement consumption: Theoretical ; Actual

Pre-grouting checks:

Free of blockage Inlet: Yes/No ; Outlet: Yes/No

Vents: Yes/No ; Cable duct: Yes/No

Leakage observed: Yes/No Sealed: Yes/No

If cable duct blocked: Remedial Measures

Grouting observations:

Passage of grout through vents : Yes/No

Passage of grout through outlet : Yes/No

Any equipment failure

Post grouting checks :

Probbing by stiffwire :

Remarks

Signatures of officers present during grouting :

Client Contractor System Supplier

Appendix 2800

(Refer Clause 2803.9.1)

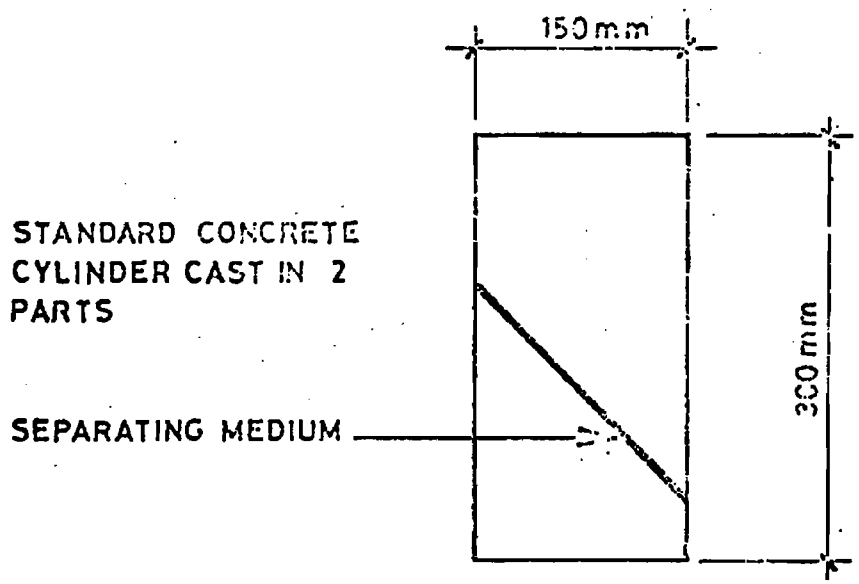

Fig. 2800/I

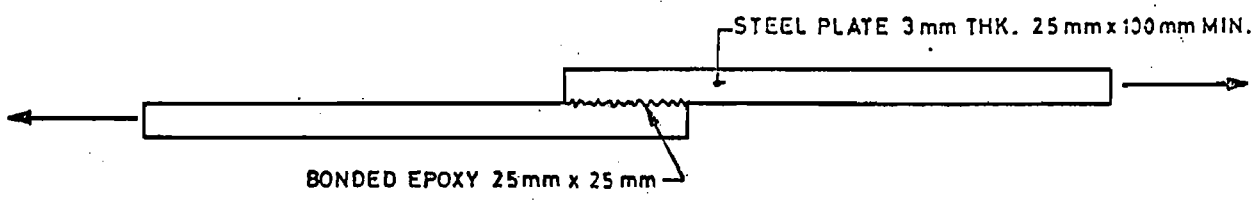

Fig. 2800/II

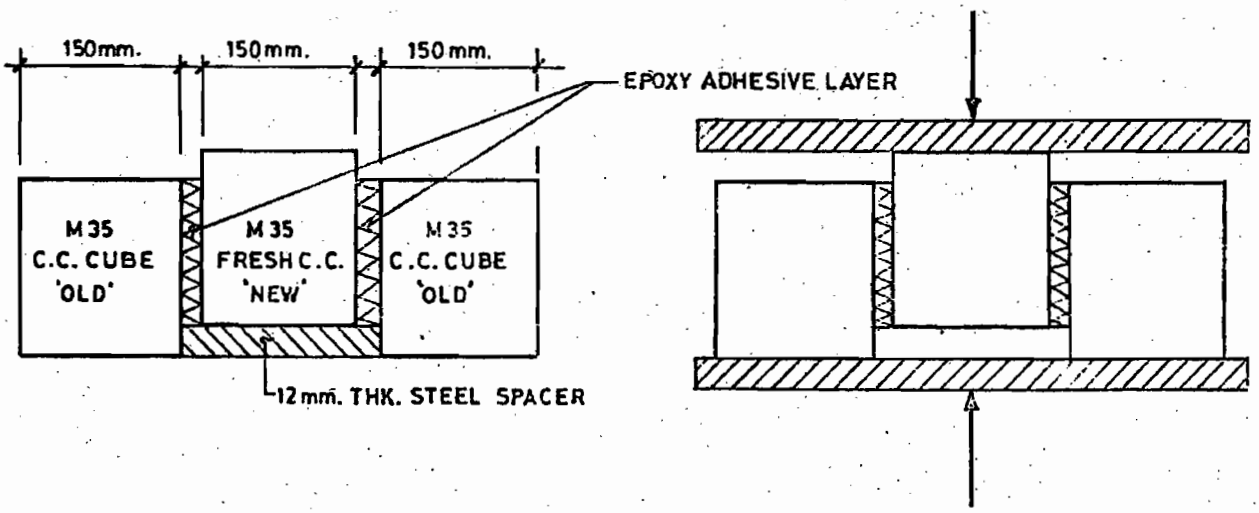
150mm.
150mm.
150mm.
EPOXY ADHESIVE LAYER
M 35
C.C. CUBE
'OLD'
M 35
FRESH C.C.
'NEW'
M 35
C.C. CUBE
'OLD'
12mm. THK. STEEL SPACER

Fig. 2800/III